BUILDING 4711
REVITALIZE ELECTRICAL SYSTEMS
MARSHALL SPACE FLIGHT CENTER, ALABAMA

INDEX OF DRAWINGS

REF. NO.	SHEET TITLE	DRAWING NO.	REV.
	GENERAL		
G001	COVER SHEET & INDEX OF DRAWINGS	FAC-CU-4711-G001	
	ARCHITECTURAL		
REF. NO.	SHEET TITLE	DRAWING NO.	REV.
A002	COORDINATION PLAN - HIGH PRIORITY SPACES	FAC-CU-4711-A002	
A101	REFLECTED CEILING DEMO PLAN AND REFLECTED CEILING PLAN	FAC-CU-4711-A101	
	ELECTRICAL		
REF. NO.	SHEET TITLE	DRAWING NO.	REV.
E001	GENERAL NOTES, ABBREVIATIONS & LEGEND	FAC-CU-4711-E001	
E002	FEEDER AND LUMINAIRE SCHEDULES	FAC-CU-4711-E002	
E101	LIGHTING PLAN - 1ST FLOOR AREA A ADD ALT. #3,4,5	FAC-CU-4711-E101	
E102	LIGHTING PLAN - 1ST FLOOR AREA B ADD ALT. #3,4,5	FAC-CU-4711-E102	
E201	ELECTRICAL PLAN - 1ST FLOOR AREA A	FAC-CU-4711-E201	
E202	ELECTRICAL PLAN - 1ST FLOOR AREA B	FAC-CU-4711-E202	
E203	LARGE SCALE ELECTRICAL PLANS	FAC-CU-4711-E203	
E204	BUS DUCT FLOOR PLAN - 1ST FLOOR AREA A	FAC-CU-4711-E204	
E205	BUS DUCT FLOOR PLAN - 1ST FLOOR AREA B	FAC-CU-4711-E205	
E301	FIRE ALARM PLAN - 1ST FLOOR AREA A ADD ALT. #1	FAC-CU-4711-E301	
E302	FIRE ALARM PLAN - 1ST FLOOR AREA B ADD ALT. #1	FAC-CU-4711-E302	
E303	FIRE ALARM PLAN - MISCELLANEOUS ADD ALT. #1	FAC-CU-4711-E303	
E401	LIGHTNING PROTECTION PLAN ADD ALT. #2	FAC-CU-4711-E401	
E501	ONE LINE DIAGRAM - MAIN DEMO & NEW WORK	FAC-CU-4711-E501	
E502	ONE LINE DIAGRAM - 4711-BUSD0001 DEMO & NEW WORK	FAC-CU-4711-E502	
E503	ONE LINE DIAGRAM - 4711-BUSD0002 DEMO & NEW WORK	FAC-CU-4711-E503	
E504	ONE LINE DIAGRAM - 4711-BUSD0003 DEMO & NEW WORK	FAC-CU-4711-E504	
E505	ONE LINE DIAGRAM - 4711-BUSD0004 DEMO & NEW WORK	FAC-CU-4711-E505	
E506	ONE LINE DIAGRAM - 4711-BUSD0005 DEMO & NEW WORK	FAC-CU-4711-E506	
E507	ONE LINE DIAGRAM - 4711-BUSD0006 DEMO & NEW WORK	FAC-CU-4711-E507	
E508	ONE LINE DIAGRAM - 4711-BUSD0007 DEMO & NEW WORK	FAC-CU-4711-E508	
E601	ELECTRICAL DETAILS	FAC-CU-4711-E601	
E602	ELECTRICAL DETAILS - ADD ALT. #2 & #5	FAC-CU-4711-E602	
E701	PANEL SCHEDULES & COORDINATION	FAC-CU-4711-E701	
E702	PANEL SCHEDULES	FAC-CU-4711-E702	
E703	PANEL SCHEDULES	FAC-CU-4711-E703	
E704	PANEL SCHEDULES	FAC-CU-4711-E704	
E705	PANEL SCHEDULES	FAC-CU-4711-E705	
E706	PANEL SCHEDULES	FAC-CU-4711-E706	
E707	PANEL SCHEDULES	FAC-CU-4711-E707	
E708	PANEL, SWITCHBOARD, & STARTER SCHEDULES	FAC-CU-4711-E707	
E801	DISCONNECT SCHEDULES	FAC-CU-4711-E801	
E802	DISCONNECT AND TRANSFORMER SCHEDULES	FAC-CU-4711-E802	
	UCS		
U1	UCS FLOOR PLAN AND NOTES	FAC-CU-4711-U1	
U2	UCS DEMOLITION WIRING DETAILS & NEW COMM TRUNK LAYOUT	FAC-CU-4711-U2	

ADDITIVE ALTERNATES

1. UPGRADES TO THE EXISTING FIRE ALARM SYSTEM AS SHOWN ON PLANS.
2. PROVIDE A NEW LIGHTNING PROTECTION SYSTEM.
3. PROVIDE REPLACEMENT OF THE EXISTING OFFICE 2X4 AND 2X2 LIGHTING FIXTURES. TO UTILIZE LED FIXTURES.
4. REPLACE THE EXISTING HIGH BAY FLUORESCENT LIGHTING WITH LED HIGH BAY FIXTURES.
5. REPLACE EXISTING EXTERIOR WALL MOUNTED METAL HALIDE FIXTURES WITH LED FIXTURES.

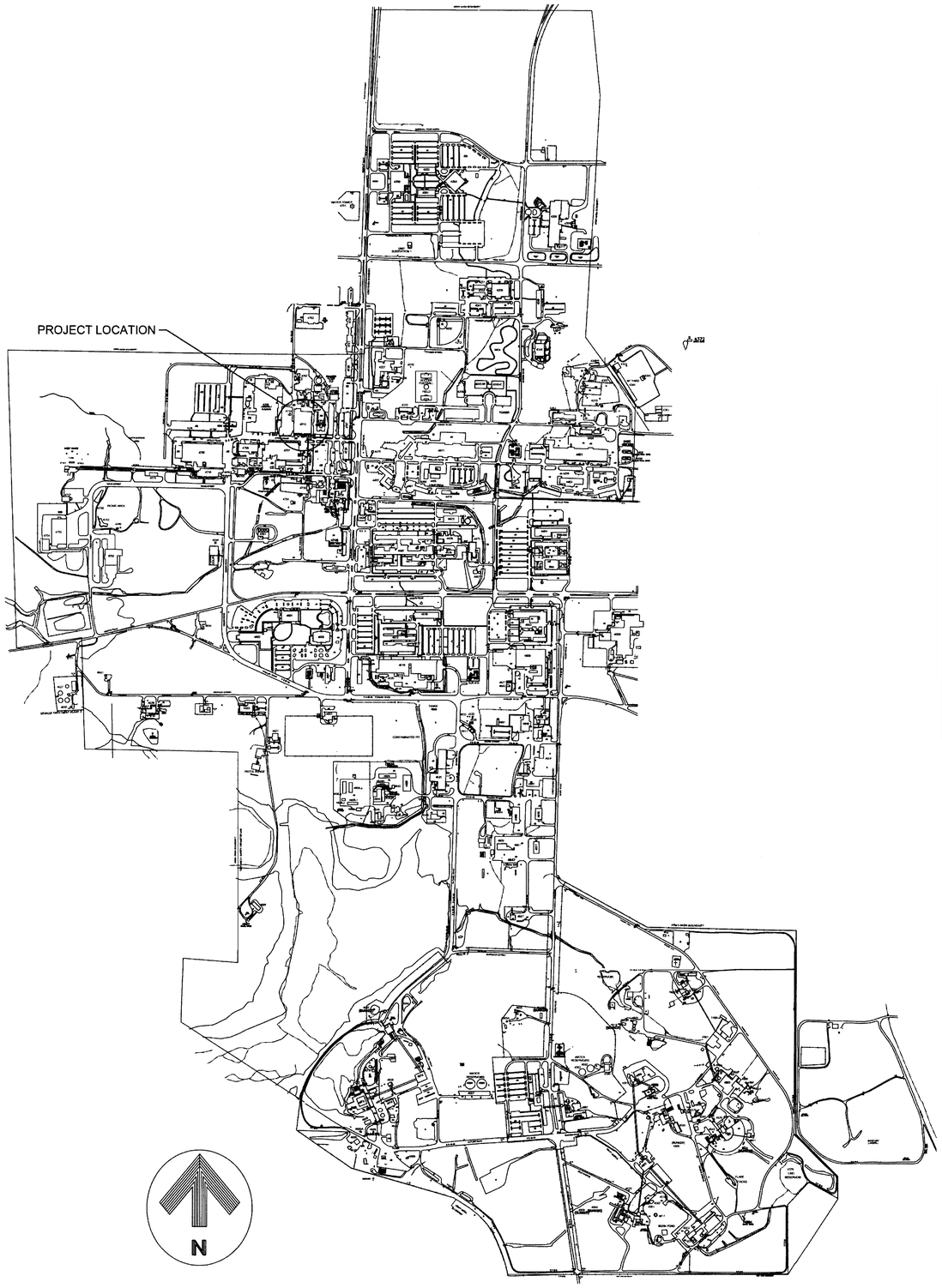

VICINITY MAP
N.T.S.

ATTENTION!

ALL CONTRACTORS AND SUBCONTRACTORS PREPARING BIDS FOR THIS PROJECT

USING A 'COMPARABLE, EQUAL' OR 'SUBSTITUTION' PRODUCT, IN THE PLACE OF A 'BASIS OF DESIGN' PRODUCT, MAY REQUIRE CHANGES TO THE MECHANICAL, ELECTRICAL, STRUCTURAL OR ARCHITECTURAL BUILDING SYSTEMS IN ORDER TO ACCOMODATE THE PRODUCT. THE CONTRACTOR IS RESPONSIBLE FOR ALL COSTS OF MAKING CHANGES TO THE BUILDING SYSTEMS. SUBMIT IN ACCORDANCE WITH SPEC SECTION 01 60 00 PRODUCT REQUIREMENT.

WARNING
DO NOT SCALE THIS DRAWING
THIS DRAWING WAS DESIGNED TO BE PRINTED AT A NASA SHEET SIZE: MSFC STD SIZE 40" X 28"

ALABAMA REGISTERED No. 26867 PROFESSIONAL ENGINEER JOHN AVERRETT 9/4/15

SIGNATURES ON THIS SHEET INDICATE ACCEPTANCE OF ALL DRAWINGS LISTED IN THE INDEX OF DRAWINGS.

CONCURRENCE: DATE: 9/17/15
PLANNING AND SUPPORT MANAGEMENT GROUP
CONCURRENCE: DATE: 9/24/15
CONTRACT MANAGEMENT TEAM
CONCURRENCE: DATE: 9/23/15
OPERATIONS & MAINTENANCE GROUP
CONCURRENCE: DATE: 9-21-15
ENVIRONMENTAL ENGINEERING DEPT.
CONCURRENCE: DATE: 9/17/15
USING OFFICE
CONCURRENCE: DATE: 9-18-15
ENVIRONMENTAL HEALTH
CONCURRENCE: DATE: 9/22/15
SAFETY OFFICE
CONCURRENCE: DATE: 9/23/15
PROJECT CIM
CONCURRENCE: DATE: 9-21-15

COMMUNICATIONS OFFICE
TELECOMMUNICATIONS EQUIPMENT AFFECTED BY THIS CONTRACT WORK IS NOT TO BE ALTERED OR REMOVED BY THE CONTRACTOR. CONTACT THE CATS IN THE EVENT OF A CONFLICT

REF. NO. G001

FINAL SUBMITTAL
ISSUED FOR CONSTRUCTION

REV.	BY	DATE	REVISION	C.I. NO.	APPROVED

NASA Marshall Space Flight Center
Huntsville, Alabama 35812

BUILDING 4711
REVITALIZE ELECTRICAL SYSTEMS

COVER SHEET & INDEX OF DRAWINGS

AE FIRM: GOODWYN | MILLS | CAWOOD — MERRICK & COMPANY — JOINT VENTURE

NASA AE CONTRACT NO. NNM12AA49C NNM14AA72T

SUBMITTED: JENNIFER LANDRY
APPROVAL RECOMMENDED: CODY GOODMAN, AS22 PROJECT A/E
APPROVAL RECOMMENDED: TIM DOSS, AS22 SUPPORT A/E
APPROVAL RECOMMENDED: PHIL HENDRIX, AS22 TEAM LEAD
APPROVED: NELSON OLINGER, AS22 GROUP LEAD, DATE: 09/15/15

AE: DATE: 09/15/15
DESIGNED: S. CRITTENDEN
DRAWN: M. PATE
CHECKED: J. AVERRETT
SCALE:
SPEC. NO. FAC-M5083

DRAWING NO. FAC-CU-4711-G001
SHEET 01 OF 38

Master Bid Disk 10-06-2015

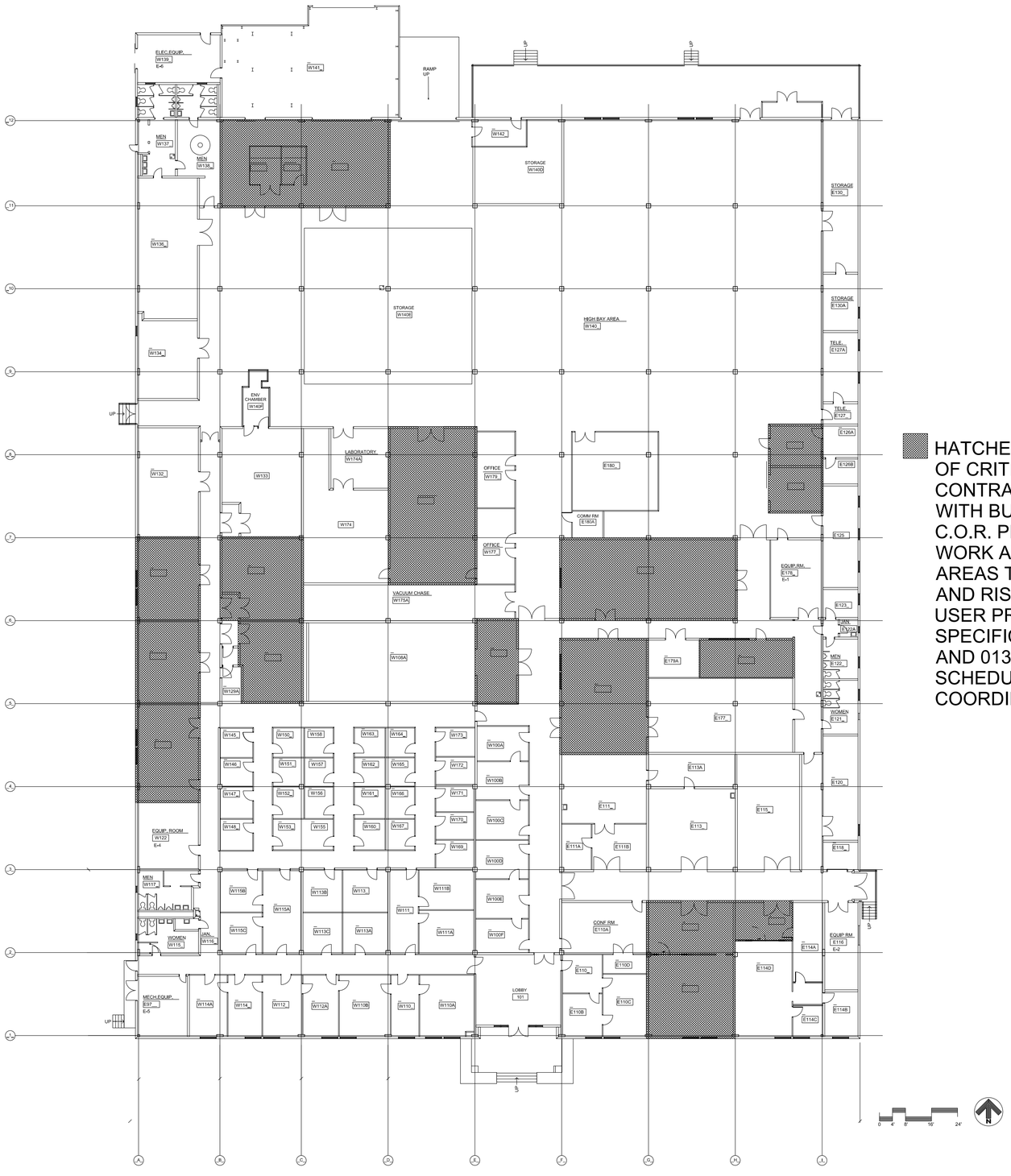

HATCHED ROOMS INDICATE AREAS OF CRITICAL USER OPERATIONS. THE CONTRACTOR SHALL COORDINATE WITH BUILDING MANAGER AND C.O.R. PRIOR TO COMENCMENT OF WORK ADJACENT TO THE INDICATED AREAS TO MINIMIZE DISRUPTION AND RISK OF DAMAGE TO CRITICAL USER PROJECTS. REFERENCE SPECIFICATION SECTIONS 010590 AND 013200 FOR ADDITIONAL SCHEDULE AND SEQUENCE COORDINATION REQUIREMENTS.

1 FIRST FLOOR COORDINATION PLAN

SCALE: 1/16" = 1'-0"

Master Bid Disk 10-06-2015

WARNING

DO NOT SCALE THIS DRAWING

THIS DRAWING WAS DESIGNED TO BE PRINTED AT A NASA SHEET SIZE: MSFC STD. SIZE 40" X 28"

PRELIMINARY__CADD__DWG.

CHANGES TO THIS DRAWING SHALL BE MADE ON CADD ONLY.

LATEST CADD UPDATE:

BY:

REV.	BY	DATE	REVISION	C.I. NO.	APPROVED

Marshall Space Flight Center
Huntsville, Alabama 35812

BUILDING 4711
REVITALIZE ELECTRICAL SYSTEMS
COORDINATION PLAN - HIGH PRIORITY SPACES

STATE of ALABAMA
MARK J. COYLE 5850
REGISTERED ARCHITECT

FINAL SUBMITTAL
ISSUED FOR CONSTRUCTION

REF. NO. A002

AE FIRM:

NASA AE CONTRACT NO. NNM12AA49C NNM14AA72T

SUBMITTED: JENNIFER LANDRY

APPROVAL RECOMMENDED: CODY GOODMAN, AS22 PROJECT A/E

APPROVED: NELSON OLINGER, AS22 GROUP LEAD, DATE: 06/18/15

AE: DATE: 09/15/15

APPROVAL RECOMMENDED: ROBERT T. MATHIS, AS22 SUPPORT A/E

DESIGNED M. COYLE

DRAWN M. COYLE

CHECKED M. COYLE

APPROVAL RECOMMENDED: ROBERT T. MATHIS, AS22 TEAM LEAD

SCALE:

SPEC. NO. FAC-M5063

DRAWING NO. FAC-CU-4711-A002

SHEET 02 OF 38

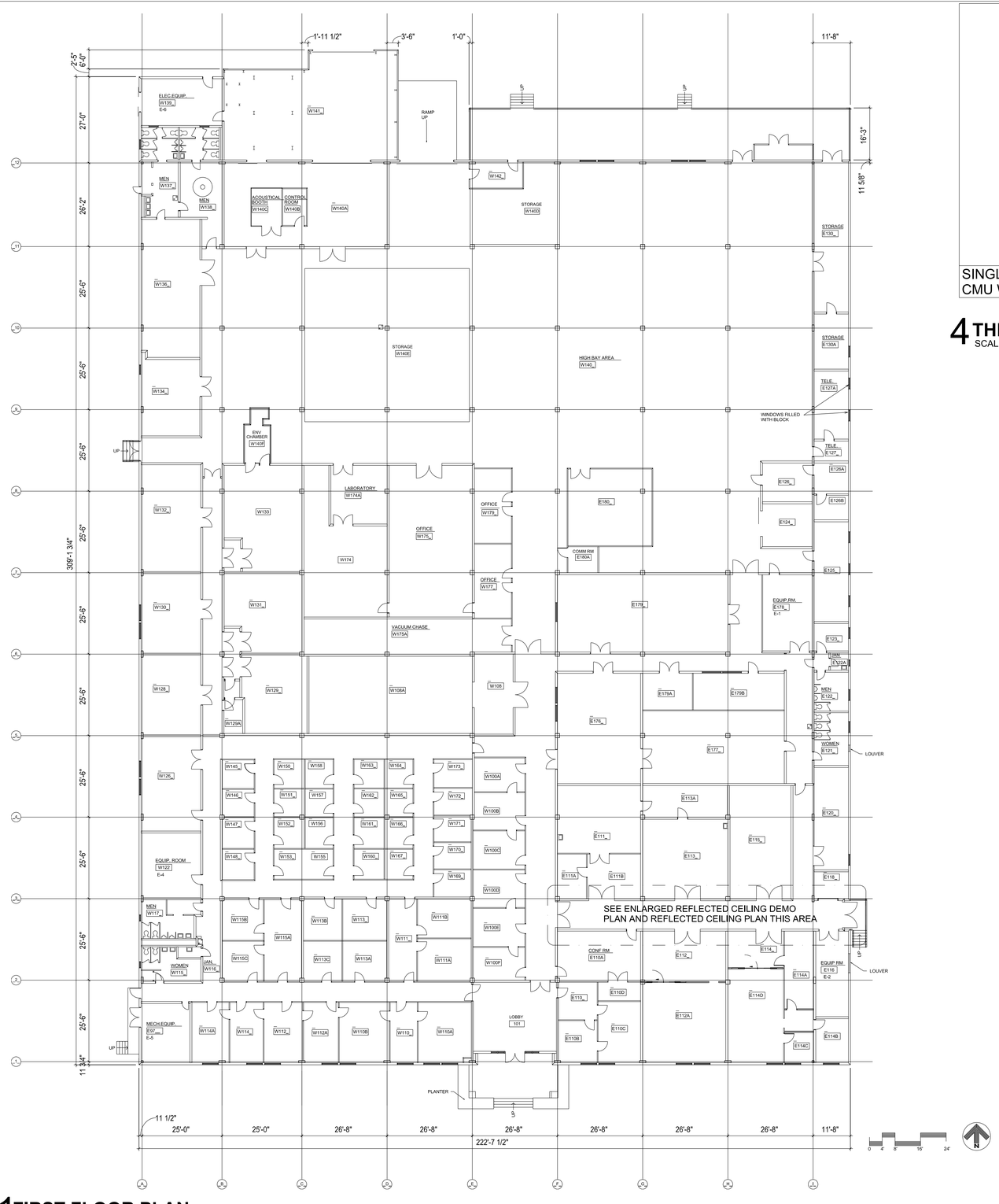

1 FIRST FLOOR PLAN

SCALE: 1/16" = 1'-0"

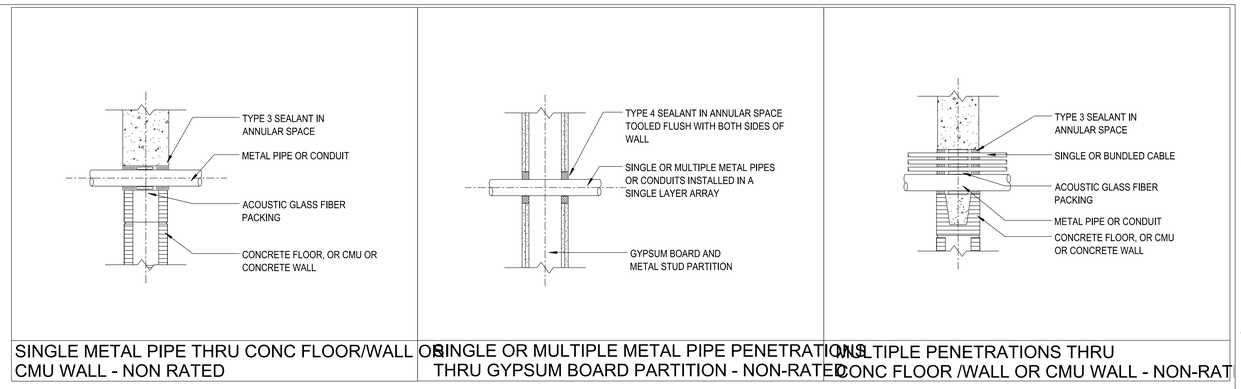

SINGLE METAL PIPE THRU CONC FLOOR/WALL OR CMU WALL - NON RATED	SINGLE OR MULTIPLE METAL PIPE PENETRATIONS THRU GYPSUM BOARD PARTITION - NON-RATED	MULTIPLE PENETRATIONS THRU CONC FLOOR /WALL OR CMU WALL - NON-RAT

4 THRU PENETRATION DETAILS

SCALE: 1" = 1'-0"

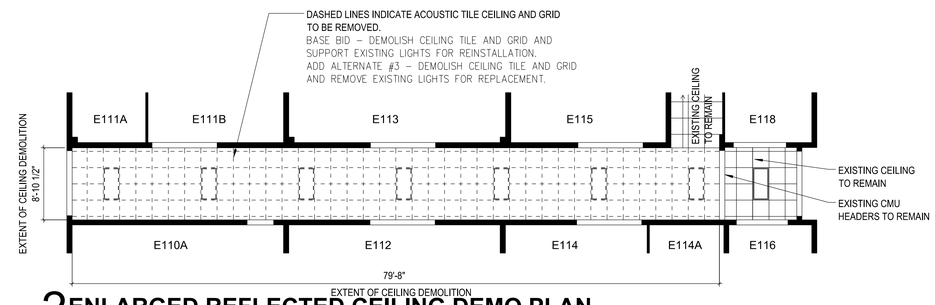

2 ENLARGED REFLECTED CEILING DEMO PLAN

SCALE: 1/8" = 1'-0"

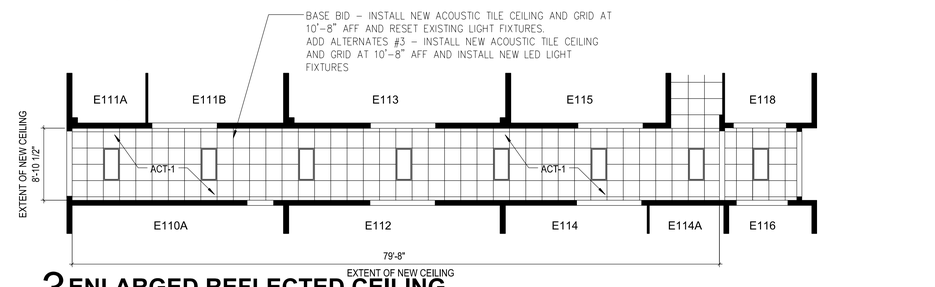

3 ENLARGED REFLECTED CEILING PLAN

SCALE: 1/8" = 1'-0"

GENERAL NOTES:

1. GENERAL CONTRACTOR SHALL COORDINATE SEQUENCE OF CEILING DEMOLTION, REPLACEMENT, AND INSTALLATION TO SUPPORT THE SEQUENCE OF ELECTRICAL DEMOLITION AND INSTALLATION.

2. IN ADDITION TO THE NEW CEILING INDICATED ON 3/A101, THE GENERAL CONTRACTOR SHALL PROVIDE NEW TILES AS NECESSARY TO SUPPORT TILES REMOVED OR DAMAGED DUE TO THE ELECTRICAL DEMOLITION AND INSTALLATION.

3. NEW TILES SHALL BE PROVIDED TO REPLACE TILES AT LOCATIONS OF CEILING MOUNTED DEVICE DEMOLITION.

WARNING
DO NOT SCALE THIS DRAWING
THIS DRAWING WAS DESIGNED TO BE PRINTED AT A NASA SHEET SIZE: MSFC STD. SIZE 40" X 28"

PRELIMINARY__CADD__DWG.
CHANGES TO THIS DRAWING SHALL BE MADE ON CADD ONLY.
LATEST CADD UPDATE:
BY:

REV.	BY	DATE	REVISION	C.I. NO.	APPROVED

Marshall Space Flight Center
Huntsville, Alabama 35812

BUILDING 4711
REVITALIZE ELECTRICAL SYSTEMS
PLAN, REFLECTED CEILING DEMO PLAN AND REFLECTED CEILING PLAN AND PENETRATION DETAILS

STATE of ALABAMA — MARK J. COYLE 5850 — REGISTERED ARCHITECT

AE FIRM:

NASA AE CONTRACT NO. NNM12AA49C NNM14AA72T

SUBMITTED: JENNIFER LANDRY
APPROVAL RECOMMENDED: CODY GOODMAN, AS22 PROJECT A/E
APPROVED: NELSON OLINGER
AE: DATE: 09/15/15
APPROVAL RECOMMENDED: ROBERT T. MATHIS, AS22 SUPPORT A/E
AS22 GROUP LEAD DATE: 06/18/15
DESIGNED M. COYLE
DRAWN M. COYLE
CHECKED M. COYLE
APPROVAL RECOMMENDED: ROBERT T. MATHIS, AS22 TEAM LEAD
SCALE:
SPEC. NO. FAC-M5063

FINAL SUBMITTAL
ISSUED FOR CONSTRUCTION
REF. NO. A101

DRAWING NO. FAC-CU-4711-A101
SHEET 03 OF 38

Master Bid Disk 10-06-2015

GENERAL NOTES

1. ELECTRICAL CONTRACTOR SHALL VERIFY THE LOCATION OF UNDERGROUND UTILITIES. PRIOR TO BEGINNING SOIL DISTURBANCE, CONTACT NASA AS22 TO OBTAIN A DIG PERMIT - OSCAR FORD @ (256) 544-6759 OR (256) 603-7884. ISSUANCE OF THE DIG PERMIT MAY TAKE UP TO TWO WEEKS.
2. ELECTRICAL EQUIPMENT SHALL BE FULLY RATED FOR THE FAULT CURRENT INDICATED ON THE PLANS. NO SERIES RATING WILL BE ACCEPTED.
3. SEAL ALL PENETRATIONS IN ACCORDANCE WITH A UL APPROVED FIRESTOPPING SYSTEM TO MAINTAIN THE UL RATING OF THE WALL.
4. EXPOSED MATERIALS IN PLENUM SPACES, SHALL BE PLENUM RATED OR NONCOMBUSTIBLE.
5. SURFACE MOUNTED CONDUIT, INSTALLED IN AREAS SUBJECT TO DAMAGE, OR ANY CONDUIT INSTALLED WITHIN 8 FT. OF THE FINISHED FLOOR, SHALL BE GALVANIZED RIGID STEEL CONDUIT (GRC) UNO.
6. SUBSURFACE CONDUIT SHALL BE SCHEDULE 40PVC UNO. FOR RUNS GREATER THAN 50 FEET IN LENGTH, VERTICAL TURN UPS SHALL BE GRC SWEEP 90S WITH A BITUMASTIC COATING UNO.
7. CONTRACTOR SHALL PROVIDE A TYPE WRITTEN PANEL SCHEDULE IN ALL PANELS. CONTRACTOR SHALL NOTIFY NASA COR IF ANY CIRCUITS ARE NOT CLEARLY IDENTIFIED ON THE EXISTING PANEL SCHEDULES.
8. CONTRACTOR SHALL REPAIR ANY DISTURBED AREA TO SAME COMPACTION, GRADE, SLOPE, ETC. AS ORIGINAL AREA INCLUDING REPLACEMENT OF SOD, GRASS, ROCK, GRAVEL, RIP-RAP, ETC. TO THE SATISFACTION OF THE CONTRACTING OFFICER'S REPRESENTATIVE.
9. CLEAN UP ALL DEBRIS AROUND CONSTRUCTION SITE DAILY.
10. REMOVE ANY SPILLED DIRT, CONCRETE, ETC. FROM ANY DRIVEWAYS, ROADWAYS OR CONSTRUCTION SITE AS DIRECTED BY CONTRACTING OFFICER'S REPRESENTATIVE.
11. ALL INSTALLATIONS SHALL CONFORM TO THE REQUIREMENTS OF NFPA 70-2014, IBC 2015 AND NASA-STD-8719.11A.
12. ELECTRICAL DRAWINGS ARE DIAGRAMMATIC IN NATURE. CONTRACTOR SHALL BE RESPONSIBLE TO COORDINATE ACTUAL ARRANGEMENT WITH FACILITY.
13. CONTRACTOR SHALL FIELD VERIFY AND COORDINATE CIRCUIT ROUTING AS REQUIRED TO MEET SCHEMATIC INTENT OF THE PLANS.
14. ALL PATHS OF EGRESS SHALL BE KEPT CLEAR AT ALL TIMES WHILE THE BUILDING IS OCCUPIED.
15. CONTRACTOR SHALL COORDINATE ALL POWER OUTAGES OR DISRUPTION TO ANY SYSTEM WITH NASA PERSONNEL. CONTRACTOR SHALL NOTIFY NASA 21 DAYS PRIOR TO ANY OUTAGE. CONTRACTOR SHALL NOT PROCEED UNTIL WRITTEN NOTICE HAS BEEN RECEIVED FROM NASA ALLOWING THE OUTAGE. CONTRACTOR SHALL ENSURE THAT 1-20A SINGLE POLE BREAKER IS ENERGIZED AT ALL TIMES DURING CONSTRUCTION TO FEED THE FIRE CONTROL PANEL OR COORDINATE FIRE WATCHES WITH NASA PERSONNEL.
16. CONTRACTOR TO INSTALL PARALLEL CONDUIT AND FEEDERS FROM ANY NEW SWITCHBOARD TO ALL PANEL BOARDS & MCC'S FED FROM IT. AFTER THE NEW PARALLEL FEED IS INSTALLED AND A SEAMLESS CROSSOVER IS COMPLETE, THE CONTRACTOR SHALL THEN REMOVE THE EXISTING FEED TO THE PANEL. LIKEWISE, ALL WIRING FROM NEW MCC'S SHALL BE REPLACED BY THE CONTRACTOR. PANEL BOARD BRANCH CIRCUIT WIRING IS NOT TO BE REPLACED. BUS DUCT DISCONNECT WIRING IS NOT TO BE REPLACED UNLESS STATED OTHERWISE IN THE CONTRACT DOCUMENTS. TRANSFORMER PRIMARY AND SECONDARY WIRING IS NOT TO BE REPLACED UNLESS OTHERWISE NOTED.
17. CONTRACTOR SHALL REPAIR AND PATCH ALL WALLS, FLOORS, PENETRATIONS, ETC. TO MATCH THE ADJACENT SURFACE WHERE EQUIPMENT IS BEING REMOVED OR IF NECESSARY FOR THE INSTALLATION OF NEW EQUIPMENT UNDER THIS CONTRACT.
18. ALL AREAS OF CONSTRUCTION DAMAGED DURING THIS CONTRACT SHALL BE REPAIRED TO MATCH ADJACENT SURFACES.
19. BUS DUCT LOCATED OVER AREAS OF CONCERN AS SHOWN ON FAC-CU-4711-A002 SHALL HAVE ALL COMBUSTIBLE MATERIALS REMOVED.
20. ALL UNUSED OR ABANDONED ELECTRICAL CONDUIT, CONDUCTORS, FITTINGS AND SUPPORTS SHALL BE REMOVED.
21. UNO ALL MOUNTING HEIGHTS ARE SHOWN TO BE ABOVE FINISHED FLOOR.
22. ASBESTOS CONTAINING MATERIALS MAY BE PRESENT. NASA HAS A DETAILED REPORT ON ASBESTOS CONTAINING MATERIAL. IF ASBESTOS IS FOUND, CONTRACTOR SHALL NOTIFY NASA COR IMMEDIATELY.
23. ALL EXISTING FEEDERS THAT ARE TO REMAIN NEED TO BE MEGGERED TO ENSURE THE CONDUCTORS ARE NOT COMPROMISED.
24. PANELS TO BE RELOCATED OR REPLACED WITH FLUSH MOUNTED PANELS SHALL UTILIZE THE OLD PANEL CAN AS A PULL BOX WITH TERMINAL STRIPS AND COMPRESSION FITTINGS TO EXTEND THE WIRING. BUTT SPLICES ARE NOT ACCEPTED.
25. THE FLOOR PLANS AND ONE LINE DIAGRAMS INDICATE THE CURRENT AND CORRECT MAXIMO NUMBERS. FOR ANY PREVIOUS MAXIMO NUMBERS, REFER TO 4711 PANEL COORDINATION CHART ON SHEET FAC-CU-4711-E701. NEW PANEL SCHEDULES SHALL INCLUDE THE PREVIOUS MAXIMO NUMBER IN PARENTHESIS AS SHOWN ON PANELS SCHEDULES.
26. GROUND ALL EXISTING AND NEW TRANSFORMERS TO THE NEW COUNTERPOISE.

FIRE ALARM LEGEND

FACP N	NEW FIRE ALARM CONTROL PANEL.
P	EXISTING PULL STATION. DOUBLE ACTION TYPE. MOUNT AT 48" A.F.F. (OR AS REQUIRED TO MEET ADA HANDLE ACCESS REQUIREMENTS) "WG" DESIGNATES PROTECTIVE COVER.
L	EXISTING FIRE ALARM VISUAL NOTIFICATION DEVICE MOUNTED 96" A.F.F. OR 6" BELOW CEILING UNO.
L N	NEW FIRE ALARM VISUAL NOTIFICATION DEVICE MOUNTED 96" A.F.F. OR 6" BELOW CEILING UNO. "WG" DESIGNATES PROTECTIVE COVER.
AV	EXISTING ALARM AUDIO/VISUAL DEVICE MOUNTED 96" A.F.F. OR 6" BELOW CEILING UNO. "WP" INDICATES DEVICE TO BE SUITABLE FOR "DAMP LOCATION" INSTALLATION.
AV N	NEW AUDIO/VISUAL DEVICE MOUNTED 96" A.F.F. OR 6" BELOW CEILING UNO. "WG" DESIGNATES PROTECTIVE COVER. "WP" INDICATES DEVICE TO BE SUITABLE FOR "DAMP LOCATION" INSTALLATION.
SB N	NEW SOUNDER BASS DEVICE MOUNTED AT EAR LEVEL. BOLD OUTLINE ON PLANS INDICATES NEW DEVICE TO BE INSTALLED.
S	EXISTING FIRE ALARM PHOTOELECTRIC SMOKE DETECTOR - CEILING/WALL MOUNTED. AS SHOWN ON DRAWINGS. BOLD OUTLINE ON PLANS INDICATES NEW DEVICE TO BE INSTALLED.
S N	NEW FIRE ALARM PHOTOELECTRIC SMOKE DETECTOR - CEILING/WALL MOUNTED. AS SHOWN ON DRAWINGS.
H	EXISTING FIRE ALARM 135° RATE-OF-RISE HEAT DETECTOR - CEILING/WALL MOUNTED. AS SHOWN ON DRAWINGS.
D	EXISTING FIRE ALARM DUCT SMOKE DETECTOR. PROVIDE WITH REMOTE ALARM INDICATOR AND RELAY AS REQUIRED FOR UNIT SHUTDOWN.
DH N	NEW FIRE ALARM SYSTEM DOOR HOLD.
RTS N	NEW REMOTE ALARM INDICATING LIGHT AND TEST SWITCH.
AIM N	NEW ADDRESSABLE INPUT MODULE.
AOM N	NEW ADDRESSABLE OUTPUT MODULE.
T N	NEW REMOTE TEST STATION FOR DUCT DETECTORS.
S	EXISTING SMOKE DETECTOR TO BE REMOVED.

ELECTRICAL LEGEND

	CONDUIT OR RACEWAY EXPOSED TO VIEW. RUN PARALLEL OR PERPENDICULAR TO STRUCTURE CONCEAL FROM VIEW AS MUCH AS POSSIBLE
	CONDUIT OR RACEWAY CONCEALED IN CEILING CAVITY OR WALL
	CONDUIT OR RACEWAY UNDERGROUND
	HOMERUN TO PANEL CIRCUIT AS SHOWN
	BUS DUCT TO BE REPLACED. SEE FLOOR PLANS FOR EXACT LOCATIONS AND MORE INFORMATION.
AV	PANELBOARD OR SWITCHBOARD TO BE REMOVED AND REPLACED WITH NEW PANELBOARD OR SWITCHBOARD. REFER TO KEY NOTE ON EACH DRAWING FOR MORE INFORMATION.
	PANELBOARD OR SWITCHBOARD TO REMAIN. REFER TO KEY NOTE ON EACH DRAWING FOR MORE INFORMATION.
	PANELBOARD OR SWITCHBOARD TO BE REMOVED. REFER TO KEY NOTE ON EACH DRAWING FOR MORE INFORMATION.
	DISCONNECT TO BE REMOVED AND REPLACED WITH NEW DISCONNECT. REFER TO KEY NOTE ON EACH DRAWING FOR MORE INFORMATION.
	DISCONNECT TO BE REMAIN. REFER TO KEY NOTE ON EACH DRAWING FOR MORE INFORMATION.
	DISCONNECT TO BE REMOVED. REFER TO KEY NOTE ON EACH DRAWING FOR MORE INFORMATION.
T	TRANSFORMER TO BE REPLACED WITH NEW TRANSFORMER. REFER TO KEY NOTE ON EACH DRAWING FOR MORE INFORMATION.
T	TRANSFORMER TO BE REMAIN. REFER TO KEY NOTE ON EACH DRAWING FOR MORE INFORMATION.
T	TRANSFORMER TO BE REMOVED. REFER TO KEY NOTE ON EACH DRAWING FOR MORE INFORMATION.
#	PLAN NOTE
J	JUNCTION/ PULL BOX
	ONE LINE CIRCUIT BREAKER
	ONE LINE TRANSFORMER
	ONE LINE SWITCHBOARD
	STARTER
	STARTER/DISCONNECT COMBINATION UNIT.
	ONE-LINE GROUND

LIGHTING LEGEND

X	2' x 4' RECESSED TROFFER. LETTER "X" INDICATES FIXTURE TYPE. SEE LUMINAIRE SCHEDULE ON SHEET FAC-CU-4711-E101 FOR MORE INFORMATION.
XE	2' x 4' RECESSED TROFFER. LETTER "X" INDICATES FIXTURE TYPE. SEE LUMINAIRE SCHEDULE ON SHEET FAC-CU-4711-E101 FOR MORE INFORMATION. THE LETTER "E" INDICATES THAT THE FIXTURE IS EQUIPPED WITH EMERGENCY BALLAST AND/OR WIRED AS A NIGHT LIGHT.
X	2' x 4' RECESSED TROFFER TO BE REMOVED AND ALL ASSOCIATED WIRING AND CONDUIT.
X	WALL PACK - WALL MOUNTED FIXTURE. LETTER "X" INDICATES FIXTURE TYPE. SEE LUMINAIRE SCHEDULE ON SHEET FAC-CU-4711-E101 FOR MORE INFORMATION.
X	EMERGENCY LIGHT WITH BATTERY POWER, CONNECTED TO UNSWITCHED HOTLEG. LETTER "X" INDICATES FIXTURE TYPE, SEE LUMINAIRE SCHEDULE.
X	2' x 2' RECESSED TROFFER. LETTER "X" INDICATES FIXTURE TYPE. LETTER "X" INDICATES FIXTURE TYPE. SEE LUMINAIRE SCHEDULE ON SHEET FAC-CU-4711-E101 FOR MORE INFORMATION.
XE	2' x 2' RECESSED TROFFER. LETTER "X" INDICATES FIXTURE TYPE. LETTER "X" INDICATES FIXTURE TYPE. SEE LUMINAIRE SCHEDULE ON SHEET FAC-CU-4711-E101 FOR MORE INFORMATION. THE LETTER "E" INDICATES THAT THE FIXTURE IS EQUIPPED WITH EMERGENCY BALLAST AND/OR WIRED AS A NIGHT LIGHT.

REPLACEMENT LEGEND

	SHADING DENOTES ELECTRICAL EQUIPMENT IS TO BE REPLACED. REFER TO KEY NOTE ON EACH DRAWING FOR MORE INFORMATION.
	HATCHING DENOTES ELECTRICAL EQUIPMENT IS TO BE REMOVED. REFER TO KEY NOTE ON EACH DRAWING FOR MORE INFORMATION.
	NO SHADING OR HATCHING DENOTES ELECTRICAL EQUIPMENT IS TO REMAIN. REFER TO KEY NOTE ON EACH DRAWING FOR MORE INFORMATION.

ELECTRICAL ABBREVIATIONS

A, AMP	AMPERE
ACSR	ALUMINUM CONDUCTOR STEEL-REINFORCED
AF	AMPS FRAME
AFF	ABOVE FINISHED FLOOR
AIC	AMPS INTERRUPTING CAPACITY (SYM RMS)
AT	AMPS TRIP
AWG	AMERICAN WIRE GAUGE
(#)C	FIXTURE DESIGNATION (#) INDICATES # OF FIXTURES TOTAL
C	CONDUIT
CKT	CIRCUIT
CU	COPPER
ELEC	ELECTRIC OR ELECTRICAL
EPR	ETHYLENE-PROPYLENE RUBBER INSULATION
EXIST	EXISTING
FACP	FIRE ALARM CONTROL PANEL
GFI	GROUND FAULT INTERRUPTER
G	GROUND
HP	HORSEPOWER
KV	KILOVOLT
KVA	KILOVOLT AMPERES
KW	KILOWATT
KWH	KILOWATT HOURS
MIN	MINIMUM
N12	NEMA 12 RATED FOR DUST ENCLOSURE
N3R	NEMA 3R RATED FOR EXTERIOR USE
NAC	NOTIFICATION APPLIANCE CIRCUIT
NEC	NATIONAL ELECTRIC CODE
PNL	PANEL
P,PH	PHASE
PSI	POUNDS PER SQUARE INCH
PVC	POLYVINYL CHLORIDE
RECPT	RECEPTACLE
REQD	REQUIRED
RGS	RIGID GALVANIZED STEEL
RU	RACK UNIT
SPEC	SPECIFICATIONS
SWBD	SWITCHBOARD
TEL	TELEPHONE
TVSS	TRANSIENT VOLTAGE SURGE SUPPRESSION
TYP	TYPICAL
UG	UNDERGROUND
UNO	UNLESS NOTED OTHERWISE
V	VOLT
VA	VOLT AMPERE
W	WEST
WP	WEATHERPROOF
XFMR	TRANSFORMER
#	NUMBER

WARNING
DO NOT SCALE THIS DRAWING
THIS DRAWING WAS DESIGNED TO BE PRINTED AT A NASA SHEET SIZE: MSFC STD. SIZE 40" X 28"

ALABAMA REGISTERED No. 26867 PROFESSIONAL ENGINEER JOHN AVERRETT 9/4/15

REV	BY	DATE	REVISION	C.I. NO.	APPROVED		

Marshall Space Flight Center
Huntsville, Alabama 35812

BUILDING 4711
REVITALIZE ELECTRICAL SYSTEMS

GENERAL NOTES, ABBREVIATIONS & LEGEND

AE FIRM: GOODWYN | MILLS | CAWOOD MERRICK & COMPANY JOINT VENTURE

NASA AE CONTRACT NO. NNM12AA49C NNM14AA72T

SUBMITTED: JENNIFER LANDRY
AE: DATE: 09/15/15
DESIGNED S. CRITTENDEN
DRAWN M. PATE
CHECKED J. AVERRETT
SCALE: AS SHOWN

APPROVAL RECOMMENDED: CODY GOODMAN, AS22 PROJECT A/E
APPROVAL RECOMMENDED: TIM DOSS, AS22 SUPPORT A/E
APPROVAL RECOMMENDED: PHIL HENDRIX, AS22 TEAM LEAD
SPEC. NO. FAC-M5063

APPROVED: NELSON OLINGER, AS22 GROUP LEAD DATE: 09/15/15

DRAWING NO. FAC-CU-4711-E001
SHEET 04 OF 38

FINAL SUBMITTAL
ISSUED FOR CONSTRUCTION
REF. NO. E001

Master Bid Disk 10-06-2015

A | B | C | D | E | F | G

FEEDER SCHEDULE (EXISTING WIRING)

SYMBOL	COPPER	SYMBOL	COPPER
2 / 2G E	2#12 & 1#12(G) - 3/4"C	7A / 3G E	3#6 & 1#8(G) - 1-1/4"C
2 / 3G E	3#12 & 1#12(G) - 3/4"C	7B / 3G E	3#6 & 1#8(G) - 1"FLEX - 3/4"C
2A / 3G E	3#12 & 1#12(G) - 1/2"C	8 / 2G E	2#4 & 1#8(G) - 1"C
2B / 3G E	3#14 & 1#14(G) - 3/4"C	8 / 3G E	3#4 & 1#8(G) - 1"C
2 / 4G E	4#12 & 1#12(G) - 3/4"C	8A / 3 E	3#4 & 1#10(N) - 1-1/4"C
2A / 4G E	4#12 & 1#2(G) - 3/4"C	8B / 3G E	4#4 & 1#6(G) - 2"C
3 / 2G E	2#10 & 1#10(G) - 3/4"C	8A / 4 E	4#4 - 1-1/4"C
3A / 2G E	2#10 & 1#12(G) - 3/4"C	8 / 4G E	4#4 & 1#12(G) - 1-1/4"C
3D / 2G E	1#10, 1#12(N), 1#12(G) - 3/4"C	8A / 4G E	4#4 & 1#10(G) - 1-1/4"C
3 / 3G E	3#10 & 1#10(G) - 3/4"C	8B / 4G E	4#4 & 1#4(G) - 2"C
3A / 3G E	3#10 & 1#10(G) - 1"C	9 / 4G E	4#4 & 1#8(G) - 1"C
3B / 3G E	3#10 & 1#10(G) - 2"C	10 / 3G E	3#2 & 1#8(G) - 1-1/4"C
3C / 3G E	3#10 & 1#12(G) - 3/4"C	10A / 3G E	3#2 & 1#2(G) - 2"C
3 / 4G E	4#10 & 1#10(G) - 3/4"C	10B / 3G E	3#3 & 1#6(G) - 3"C
3A / 4G E	4#10 & 1#10(G) - 1"C	10C / 3G E	3#2 & 1#6(G) - 2"C
3C / 4G E	4#10 & 1#12(G) - 3/4"C	10 / 4G E	4#2 & 1#8(G) - 1-1/4"C
4 / 3G E	3#8 & 1#10(G) - 3/4"C	10A / 4G E	4#2 & 1#8(G) - 1-1/2"C
4A / 3G E	3#8 & 1#8(G) - 2"C	10B / 4G E	4#3 & 1#6(G) - 3"C
4 / 4G E	4#8 & 1#10(G) - 3/4"C	10C / 4G E	4#2 & 1#6(G) - 2"C
4B / 4G E	4#8 & 1#8(G) - 1"C	11 / 4G E	4#2 & 1#6(G) - 1-1/4"C
5 / 3G E	3#8 & 1#10(G) - 3/4"C	11A / 4G E	4#2 & 1#4(G) - 2"C
5 / 4G E	4#8 & 1#10(G) - 3/4"C	12.5A / 3G E	3#1 & 1#6(G) - 2"C
5A / 4G E	3#8, 1#12(N) & 1#12(G) - 3/4"C	12.5 / 4G E	4#1 & 1#6(G) - 1-1/2"C
6 / 2G E	2#6 & 1#10(G) - 1"C	15A / 4G E	4#1/0 & 1#6(G) - 1-1/2"C
6 / 3G E	3#6 & 1#10(G) - 1"C	15B / 4G E	4#1/0 & 1#2(G) - 2"C
6A / 3G E	3#6 & 1#10(G) - 3/4"C	15C / 4G E	4#1/0 & 1#6(G) - 2"C
6 / 4G E	4#6 & 1#10(G) - 1"C	17.5A / 3G E	3#2/0, 1#2/0(G) - 2"C
6B / 4G E	4#6 & 1#10(G) - 1-1/2"C	17.5B / 3G E	3#2/0, 1#4(G) - 2-1/2"C
6C / 4G E	4#6 & 1#12(G) - 1-1/2"C	17.5 / 4G E	4#2/0, 1#6(G) - 2"C
7 / 3G E	3#6 & 1#8(G) - 1"C	17.5B / 4G E	4#2/0 & 1#4(G) - 2"C
7 / 3 E	3#6 - 1"C	20 / 3G E	3#3/0 & 1#6(G) - 2"C

FEEDER SCHEDULE (EXISTING WIRING)

SYMBOL	COPPER	SYMBOL	COPPER
20B / 3G E	3#3/0 & 1#4(G) - 2-1/2"C	22.5A / 4G E	4#4/0 & 1#2(G) - 3"C
20C / 3G E	3#3/0 & 1#2(G) - 2-1/2"C	25 / 4G E	4#250MCM & 1#4(G) - 2"C
20D / 3G E	3#3/0 & 1#2(G) - 3"C	40 / 4G E	4#500MCM & 1#2(G) - 3-1/2"C
20E / 3G E	3#3/0 & 1#4(G) - 2"C	50 / 4G E	2 RUNS OF 4#250MCM & 1#2(G) - 2-1/2"C
20 / 4G E	4#3/0 & 1#6(G) - 2"C	60 / 3G E	2 RUNS OF 3#350MCM & 1#1(G) - 2-1/2"C
20A / 4G E	4#3/0 & 1#4(G) - 2"C	60 / 4G E	2 RUNS OF 4#350MCM & 1#1(G) - 3"C
20C / 4G E	4#3/0 & 1#2(G) - 2-1/2"C	80 / 4G E	2 RUNS OF 4#500MCM & 1#1/0(G) - 3-1/2"C
22.5 / 4G E	4#4/0 & 1#4(G) - 2-1/2"C		

GRAPHICS LEGEND

FEEDER SYMBOL

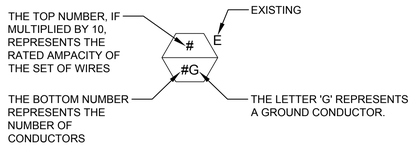

FEEDER SCHEDULE

SYMBOL	COPPER	SYMBOL	COPPER
2 / 2G	2#12 & 1#12(G) - 3/4"C	15 / 3G	3#1/0 & 1#6(G) - 1-1/2"C
2 / 3G	3#12 & 1#12(G) - 3/4"C	15 / 4G	4#1/0 & 1#6(G) - 2"C
2 / 4G	4#12 & 1#12(G) - 3/4"C	17.5 / 4G	4#2/0 & 1#6(G) - 2"C
3 / 2G	2#10 & 1#10(G) - 3/4"C	20 / 3G	3#3/0 & 1#6(G) - 2"C
3 / 3G	3#10 & 1#10(G) - 3/4"C	20 / 4G	4#3/0 & 1#6(G) - 2"C
3 / 4G	4#10 & 1#10(G) - 3/4"C	22.5 / 3G	3#4/0 & 1#4(G) - 2-1/2"C
4 / 2G	2#8 & 1#10(G) - 3/4"C	22.5 / 4G	4#4/0 & 1#4(G) - 2-1/2"C
4 / 3G	3#8 & 1#10(G) - 3/4"C	25 / 4G	4#250MCM & 1#4(G) - 2-1/2"C
5 / 2G	2#8 & 1#10(G) - 3/4"C	30 / 4G	4#350MCM & 1#4(G) - 3"C
5 / 3G	3#8 & 1#10(G) - 3/4"C	40 / 3G	3#500MCM & 1#2(G) - 3"C
5 / 4G	4#8 & 1#10(G) - 3/4"C	40 / 4G	4#500MCM & 1#3(G) - 3-1/2"C
6 / 3G	3#6 & 1#8(G) - 1"C	50 / 3G	2 PARALLEL RUNS OF 3#250MCM & 1#2(G) - 2-1/2"C
6 / 4G	4#6 & 1#8(G) - 1"C	50 / 4G	2 PARALLEL RUNS OF 4#250MCM & 1#2(G) - 3"C
7 / 2G	2#6 & 1#8(G) - 1"C	60 / 4G	2 PARALLEL RUNS OF 4#350MCM & 1#1(G) - 3-1/2"C
7 / 3G	3#4 & 1#8(G) - 1"C	80 / 4G	2 PARALLEL RUNS OF 4#500MCM & 1#1/0(G) - 3-1/2"C
7 / 4G	4#4 & 1#8(G) - 1-1/4"C	100 / 4G	3 PARALLEL RUNS OF 4#400MCM & 1#2/0(G) - 3-1/2"C
8 / 3G	3#4 & 1#8(G) - 1"C	120 / 4G	4 PARALLEL RUNS OF 4#350MCM & 1#3/0(G) - 3-1/2"C
9 / 3G	3#4 & 1#8(G) - 1"C	160 / 4G	5 PARALLEL RUNS OF 4#350MCM & 1#3/0(G) - 3-1/2"C
10 / 2G	2#3 & 1#8(G) - 1-1/4"C	200 / 4G	6 PARALLEL RUNS OF 4#400MCM & 1#3/0(G) - 3-1/2"C
10 / 3G	3#3 & 1#8(G) - 1-1/4"C	250 / 4G	7 PARALLEL RUNS OF 4#500MCM & 1#3/0(G) - 3-1/2"C
10 / 4G	4#3 & 1#8(G) - 1-1/4"C	300 / 4	8 PARALLEL RUNS OF 4#500MCM - 3-1/2"C
12.5 / 3G	3#1 & 1#6(G) - 1-1/2"C	400 / 4	11 PARALLEL RUNS OF 4#500MCM - 3-1/2"C
12.5 / 4G	4#1 & 1#6(G) - 1-1/2"C	500 / 4	14 PARALLEL RUNS OF 4#500MCM - 3-1/2"C

ADDITIVE ALTERNATE #3 OFFICE LUMINAIRE SCHEDULE (BASIS OF DESIGN)

FIXTURE MARK	LAMPS NO	LAMPS WATTS	LAMPS TYPE	VOLTAGE	MAKE	MOUNTING TYPE	MODEL	DESCRIPTION
A	1	73	LED	UNV	PHILIPS	GRID	2 DL G 73L 840 4 D UNV	ADDITIVE ALTERNATE #3: OFFICE LIGHTING REPLACEMENT. 2' X 4' RECESSED, LED GRID FIXTURE
AE	1	73	LED	UNV	PHILIPS	GRID	2 DL G 73L 840 4 D UNV EMLED	ADDITIVE ALTERNATE #3: OFFICE LIGHTING REPLACEMENT. 2' X 4' RECESSED, LED GRID FIXTURE WITH EMERGENCY BATTERY PACK.
ANL	1	73	LED	UNV	PHILIPS	GRID	2 DL G 73L 840 4 D UNV EMLED	ADDITIVE ALTERNATE #3: OFFICE LIGHTING REPLACEMENT. 2' X 4' RECESSED, LED GRID FIXTURE WIRED TO CONTINUAL HOT AND TO BE UNSWITCHED WITH EMERGENCY BATTERY PACK.
B	1	45	LED	UNV	PHILIPS	GRID	2 DL G 44L 840 2 D UNV	ADDITIVE ALTERNATE #3: OFFICE LIGHTING REPLACEMENT. 2' X 2' RECESSED, LED GRID FIXTURE
BE	1	45	LED	UNV	PHILIPS	GRID	2 DL G 44L 840 2 D UNV EMLED	ADDITIVE ALTERNATE #3: OFFICE LIGHTING REPLACEMENT. 2' X 2' RECESSED, LED GRID FIXTURE WITH EMERGENCY BATTERY PACK
H	1	40	LED	120	H.E. WILLIAMS	GRID	HET-G-S-2-4-LED*PH40/835-A-EDD*PH*MKX-120	ADDITIVE ALTERNATE #3: HIGH EFFICIENCY 2'x4' TROFFER - STATIC LED FIXTURE.
HE	1	40	LED	120	H.E. WILLIAMS	GRID	HET-G-S-2-4-LED*PH40/835-A-EM/BSL310-EDD*PH*MKX-120	ADDITIVE ALTERNATE #3: HIGH EFFICIENCY 2'x4' TROFFER - STATIC LED FIXTURE. EQUIPPED WITH EMERGENCY BATTERY PACK.
J	1	25	LED	120	H.E. WILLIAMS	GRID	LEDDR60-OS20/835-CS-MWT-EDD*LU*HILUME LTE LINE-120	ADDITIVE ALTERNATE #3: 6" ROUND DIRECTIONAL LED DOWNLIGHT

ADDITIVE ALTERNATE #4 HIGH BAY LUMINAIRE SCHEDULE (BASIS OF DESIGN)

FIXTURE MARK	LAMPS NO	LAMPS WATTS	LAMPS TYPE	VOLTAGE	MAKE	MOUNTING TYPE	MODEL	DESCRIPTION
C	1	98	LED	UNIV	PHILIPS	HIGH BAY	FBX 12L L 40 UNV N	ADDITIVE ALTERNATE #4: HIGH BAY LIGHTING REPLACEMENT. HIGH BAY LED FIXTURE
CE	1	98	LED	UNIV	PHILIPS	HIGH BAY	FBX 12L L 40 UNV N EMLED	ADDITIVE ALTERNATE #4: HIGH BAY LIGHTING REPLACEMENT. HIGH BAY LED FIXTURE WITH EMERGENCY BATTERY PACK
CNL	1	98	LED	UNIV	PHILIPS	HIGH BAY	FBX 12L L 40 UNV N EMLED	ADDITIVE ALTERNATE #4: HIGH BAY LIGHTING REPLACEMENT. HIGH BAY LED FIXTURE WIRED TO CONTINUAL HOT AND TO BE UNSWITCHED WITH EMERGENCY BATTERY PACK.
E	1	89	LED	UNIV	PHILIPS	CHAIN	DWLE51LH835-8-UNV/TBK-FKR-126	ADDITIVE ALTERNATE #4: 4' LED STRIP FIXTURE REPLACEMENT. ACCESSORIES INCLUDE STAINLESS STEEL TOP BRACKET KIT AND CHAIN HANGER SET.
EE	1	89	LED	UNIV	PHILIPS	CHAIN	DWLE51LH835-8-UNV-EMLED/TBK-FKR-126	ADDITIVE ALTERNATE #4: 4' LED STRIP FIXTURE REPLACEMENT. EQUIPPED WITH EMERGENCY BATTERY PACK. ACCESSORIES INCLUDE STAINLESS STEEL TOP BRACKET KIT AND CHAIN HANGER SET.
F	1	46	LED	UNIV	PHILIPS	CHAIN	DWLE51L835-4-UNV/TBK-FKR-126	ADDITIVE ALTERNATE #4: 8' LED STRIP FIXTURE REPLACEMENT. ACCESSORIES INCLUDE STAINLESS STEEL TOP BRACKET KIT AND CHAIN HANGER SET.
FE	1	46	LED	UNIV	PHILIPS	CHAIN	DWLE51L835-4-UNV-EMLED/TBK-FKR-126	ADDITIVE ALTERNATE #4: 8' LED STRIP FIXTURE REPLACEMENT. EQUIPPED WITH EMERGENCY BATTERY PACK. ACCESSORIES INCLUDE STAINLESS STEEL TOP BRACKET KIT AND CHAIN HANGER SET.
G	1	52	LED	UNIV	H.E. WILLIAMS	SURFACE	11-4-L43/835-F-AF12125-DRV-UNV	ADDITIVE ALTERNATE #4: 2'x4' SURFACE MOUNTED FIXTURE.
GE	1	52	LED	UNIV	H.E. WILLIAMS	SURFACE	11-4-L43/835-F-AF12125-EM/BSL310-DRV-UNV	ADDITIVE ALTERNATE #4: 2'x4' SURFACE MOUNTED FIXTURE. EQUIPPED WITH EMERGENCY BATTERY PACK.

ADDITIVE ALTERNATE #5 EXTERIOR LUMINAIRE SCHEDULE (BASIS OF DESIGN)

FIXTURE MARK	LAMPS NO	LAMPS WATTS	LAMPS TYPE	VOLTAGE	MAKE	MOUNTING TYPE	MODEL	DESCRIPTION
D	1	52	LED	UNIV	PHILIPS	WALL PACK	121 3 52 NW UNIV BLP PCB	ADDITIVE ALTERNATE #5: EXTERIOR LIGHTING REPLACMENT. EXTERIOR LED WALL PACK WITH BUTTON TYPE PHOTOCELL CONTROL.
DE	1	52	LED	UNIV	PHILIPS	WALL PACK	121-EP2 3 52 NW UNIV BLP PCB	ADDITIVE ALTERNATE #5: EXTERIOR LIGHTING REPLACMENT. EXTERIOR LED WALL PACK WITH EMERGENCY BATTERY BACKUP AND BUTTON TYPE PHOTOCELL CONTROL.

ALABAMA REGISTERED No. 26967 PROFESSIONAL ENGINEER JOHN AVERRETT 9/4/15

WARNING
DO NOT SCALE THIS DRAWING
THIS DRAWING WAS DESIGNED TO BE PRINTED AT A NASA SHEET SIZE: MSFC STD. SIZE 40" X 28"

REV	BY	DATE	REVISION	C.I. NO.	APPROVED

Marshall Space Flight Center
Huntsville, Alabama 35812

BUILDING 4711
REVITALIZE ELECTRICAL SYSTEMS

FEEDER & LUMINAIRE SCHEDULES

AE FIRM: GOODWYN | MILLS | CAWOOD — MERRICK & COMPANY — JOINT VENTURE

NASA AE CONTRACT NO. NNM12AA49C NNM14AA72T

SUBMITTED: JENNIFER LANDRY
AE: DATE: 09/15/15
DESIGNED S. CRITTENDEN
DRAWN M. PATE
CHECKED J. AVERRETT
SCALE: AS SHOWN

APPROVAL RECOMMENDED: CODY GOODMAN, AS22 PROJECT A/E
APPROVAL RECOMMENDED: TIM DOSS, AS22 SUPPORT A/E
APPROVAL RECOMMENDED: PHIL HENDRIX, AS22 TEAM LEAD
SPEC. NO. FAC-M5063

APPROVED: NELSON OLINGER, AS22 GROUP LEAD DATE: 09/15/15

DRAWING NO. FAC-CU-4711-E002
SHEET 05 OF 38

FINAL SUBMITTAL
ISSUED FOR CONSTRUCTION
REF. NO. E002

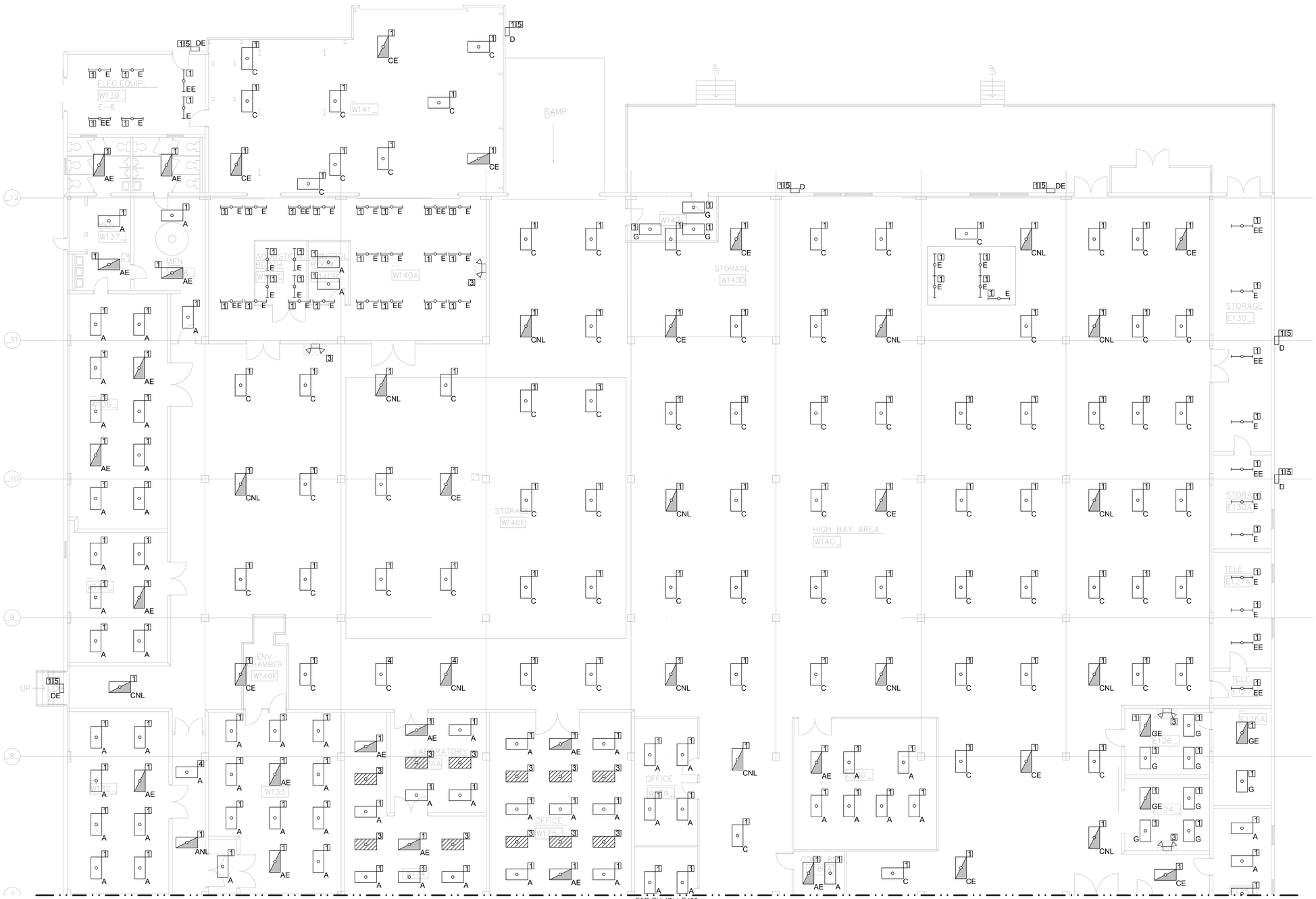

1 E101 LIGHTING PLAN - 1ST FLOOR AREA A - ADD ALT. #3,4,5

SCALE: 1/8"=1'-0"

PLAN NOTES

1. EXISTING LIGHT FIXTURE TO BE REPLACED WITH NEW LIGHT FIXTURE. SEE LUMINAIRE SCHEDULE ON SHEET FAC-CU-4711-E002 FOR ADDITIONAL INFORMATION.
2. NOT USED.
3. EXISTING LIGHT FIXTURE TO BE REMOVED AND ALL ASSOCIATED CONDUIT AND CONDUCTORS, IF ADD ALT. #3 IS ACCEPTED.
4. NEW LIGHT FIXTURE TO BE INSTALLED IN LOCATION SHOWN. SEE LUMINAIRE SCHEDULE ON SHEET FAC-CU-4711-E002 FOR ADDITIONAL INFORMATION.
5. ALL "D" & "DE" FIXTURES SHALL BE CONTROLLED BY PHOTOCELL.

GENERAL NOTES

1. ROOMS OR AREAS THAT DO NOT SHOW LIGHT FIXTURES ARE TO REMAIN AS IS AND NO WORK SHALL BE DONE AT THIS TIME.
2. ADDITIVE ALTERNATE #3 INCLUDE FIXTURES "A", "AE", "ANL", "B", "BE", "H", "HE" AND "J".
3. ADDITIVE ALTERNATE #4 INCLUDE FIXTURES "C", "CE", "CNL", "E", "EE", "F", "FE", "G", "GE".
4. ADDITIVE ALTERNATE #5 INCLUDES FIXTURE "D" AND "DE".
5. ALL BATTERY FIXTURES SHALL HAVE A CONTINUAL HOT SO THAT BATTERY ONLY OPERATES UPON POWER FAILURE.
6. FIXTURES WITH 'NL' NOTATION WILL BE CONNECTED TO CONTINUAL HOT AND BE UN-SWITCHED FOR SECURITY APPLICATION.
7. CONTRACTOR SHALL RECONNECT LIGHTS TO THE EXISTING CONTACTOR, REPLACE EXISTING CONTACTOR IF NECESSARY, THEN RECONNECT TO UCS FOR CONTROL. COORDINATE WITH UCS FOR MORE INFORMATION.
8. NO OFFICE LIGHTING ON THE SOUTH SIDE OF THE BUILDING SHALL BE CONNECTED TO UCS.

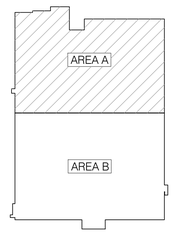

BUILDING 4711
KEY PLAN
NOT TO SCALE

0 4' 8' 16'
SCALE:1/8"=1'-0"

WARNING
DO NOT SCALE THIS DRAWING
THIS DRAWING WAS DESIGNED TO BE PRINTED AT A NASA SHEET SIZE: MSFC STD. SIZE 40" X 28"

ALABAMA REGISTERED No. 26967 PROFESSIONAL ENGINEER JOHN AVERRETT 9/4/15

REV	BY	DATE	REVISION	C.I. NO.	APPROVED

Marshall Space Flight Center
Huntsville, Alabama 35812

BUILDING 4711
REVITALIZE ELECTRICAL SYSTEMS
LIGHTING PLAN - 1ST FLOOR AREA A
ADD ALT. #3,4,5

AE FIRM: GOODWYN | MILLS | CAWOOD MERRICK & COMPANY JOINT VENTURE

NASA AE CONTRACT NO. NNM12AA49C NNM14AA72T

SUBMITTED: JENNIFER LANDRY
AE: DATE: 09/15/15
DESIGNED S. CRITTENDEN
DRAWN M. PATE
CHECKED J. AVERRETT
SCALE: AS SHOWN

APPROVAL RECOMMENDED: CODY GOODMAN, AS22 PROJECT A/E
APPROVAL RECOMMENDED: TIM DOSS, AS22 SUPPORT A/E
APPROVAL RECOMMENDED: PHIL HENDRIX, AS22 TEAM LEAD
SPEC. NO. FAC-M5063

APPROVED: NELSON OLINGER, AS22 GROUP LEAD DATE: 09/15/15

DRAWING NO. FAC-CU-4711-E101
SHEET 06 OF 38

FINAL SUBMITTAL
ISSUED FOR CONSTRUCTION
REF. NO. E101

Master Bid Disk 10-06-2015

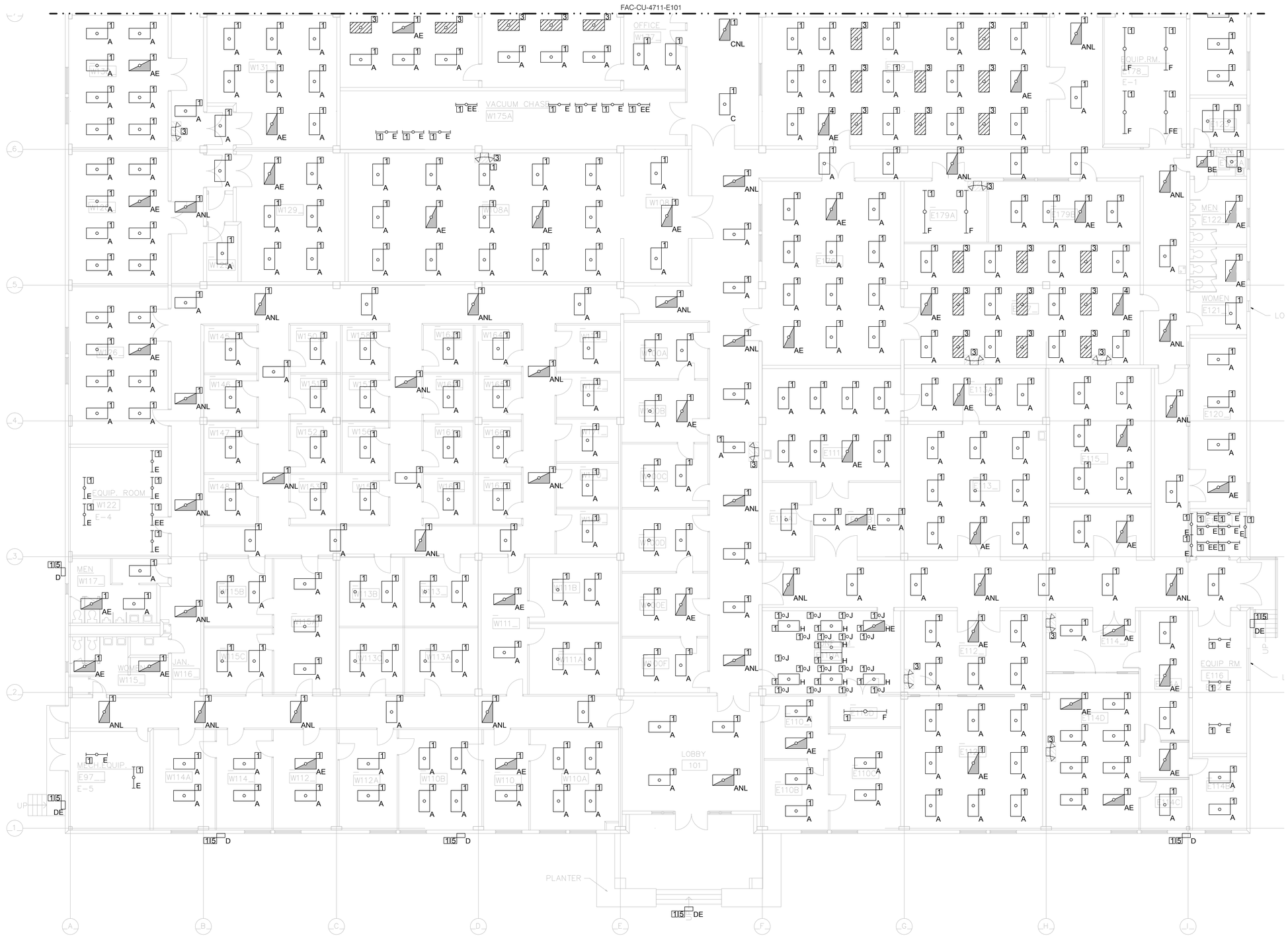

1 E102 LIGHTING PLAN - 1ST FLOOR AREA B - ADD ALT. #3,4,5
SCALE: 1/8"=1'-0"

PLAN NOTES

1. EXISTING LIGHT FIXTURE TO BE REPLACED WITH NEW LIGHT FIXTURE. SEE LUMINAIRE SCHEDULE ON SHEET FAC-CU-4711-E002 FOR ADDITIONAL INFORMATION.
2. NOT USED.
3. EXISTING LIGHT FIXTURE TO BE REMOVED AND ALL ASSOCIATED CONDUIT AND CONDUCTORS, IF ADD ALT. #3 IS ACCEPTED.
4. NEW LIGHT FIXTURE TO BE INSTALLED IN LOCATION SHOWN. SEE LUMINAIRE SCHEDULE ON SHEET FAC-CU-4711-E002 FOR ADDITIONAL INFORMATION.
5. ALL "D" & "DE" FIXTURES SHALL BE CONTROLLED BY PHOTOCELL.

GENERAL NOTES

1. ROOMS OR AREAS THAT DO NOT SHOW LIGHT FIXTURES ARE TO REMAIN AS IS AND NO WORK SHALL BE DONE AT THIS TIME.
2. ADDITIVE ALTERNATE #3 INCLUDE FIXTURES "A", "AE", "ANL", "B", "BE", "H", "HE" AND "J".
3. ADDITIVE ALTERNATE #4 INCLUDE FIXTURES "C", "CE", "CNL", "E", "EE", "F", "FE", "G", "GE".
4. ADDITIVE ALTERNATE #5 INCLUDES FIXTURE "D" AND "DE".
5. ALL BATTERY FIXTURES SHALL HAVE A CONTINUAL HOT SO THAT BATTERY ONLY OPERATES UPON POWER FAILURE.
6. FIXTURES WITH 'NL' NOTATION WILL BE CONNECTED TO CONTINUAL HOT AND BE UN-SWITCHED FOR SECURITY APPLICATION.
7. CONTRACTOR SHALL RECONNECT LIGHTS TO THE EXISTING CONTACTOR, REPLACE EXISTING CONTACTOR IF NECESSARY, THEN RECONNECT TO UCS FOR CONTROL. COORDINATE WITH UCS FOR MORE INFORMATION.
8. NO OFFICE LIGHTING ON THE SOUTH SIDE OF THE BUILDING SHALL BE CONNECTED TO UCS.

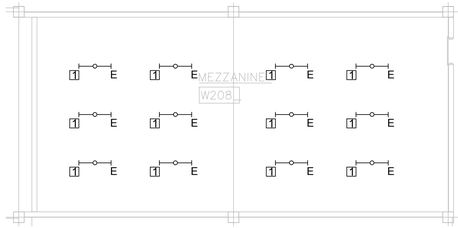

2 E102 MEZZANINE LIGHTING PLAN
SCALE: 1/8"=1'-0"

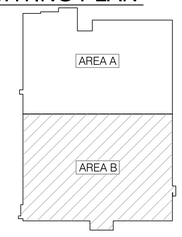

BUILDING 4711
KEY PLAN
NOT TO SCALE

0 4' 8' 16'
SCALE:1/8"=1'-0"

WARNING
DO NOT SCALE THIS DRAWING
THIS DRAWING WAS DESIGNED TO BE PRINTED AT A NASA SHEET SIZE: MSFC STD. SIZE 40" X 28"

LICENSED No. 26967 PROFESSIONAL ENGINEER JOHN AVERRETT 9/4/15

REV	BY	DATE	REVISION	C.I. NO.	APPROVED

Marshall Space Flight Center
Huntsville, Alabama 35812

BUILDING 4711
REVITALIZE ELECTRICAL SYSTEMS
LIGHTING PLAN - 1ST FLOOR AREA B
ADD ALT. #3,4,5

AE FIRM: GOODWYN | MILLS | CAWOOD — MERRICK & COMPANY — JOINT VENTURE

NASA AE CONTRACT NO. NNM12AA49C NNM14AA72T

SUBMITTED: JENNIFER LANDRY
AE: DATE: 09/15/15
DESIGNED S. CRITTENDEN
DRAWN M. PATE
CHECKED J. AVERRETT
SCALE: AS SHOWN

APPROVAL RECOMMENDED: CODY GOODMAN, AS22 PROJECT A/E
APPROVAL RECOMMENDED: TIM DOSS, AS22 SUPPORT A/E
APPROVAL RECOMMENDED: PHIL HENDRIX, AS22 TEAM LEAD
SPEC. NO. FAC-M5063

APPROVED: NELSON OLINGER, AS22 GROUP LEAD DATE: 09/15/15

DRAWING NO. FAC-CU-4711-E102
SHEET 07 OF 38

FINAL SUBMITTAL
ISSUED FOR CONSTRUCTION
REF. NO. E102

Master Bid Disk 10-06-2015

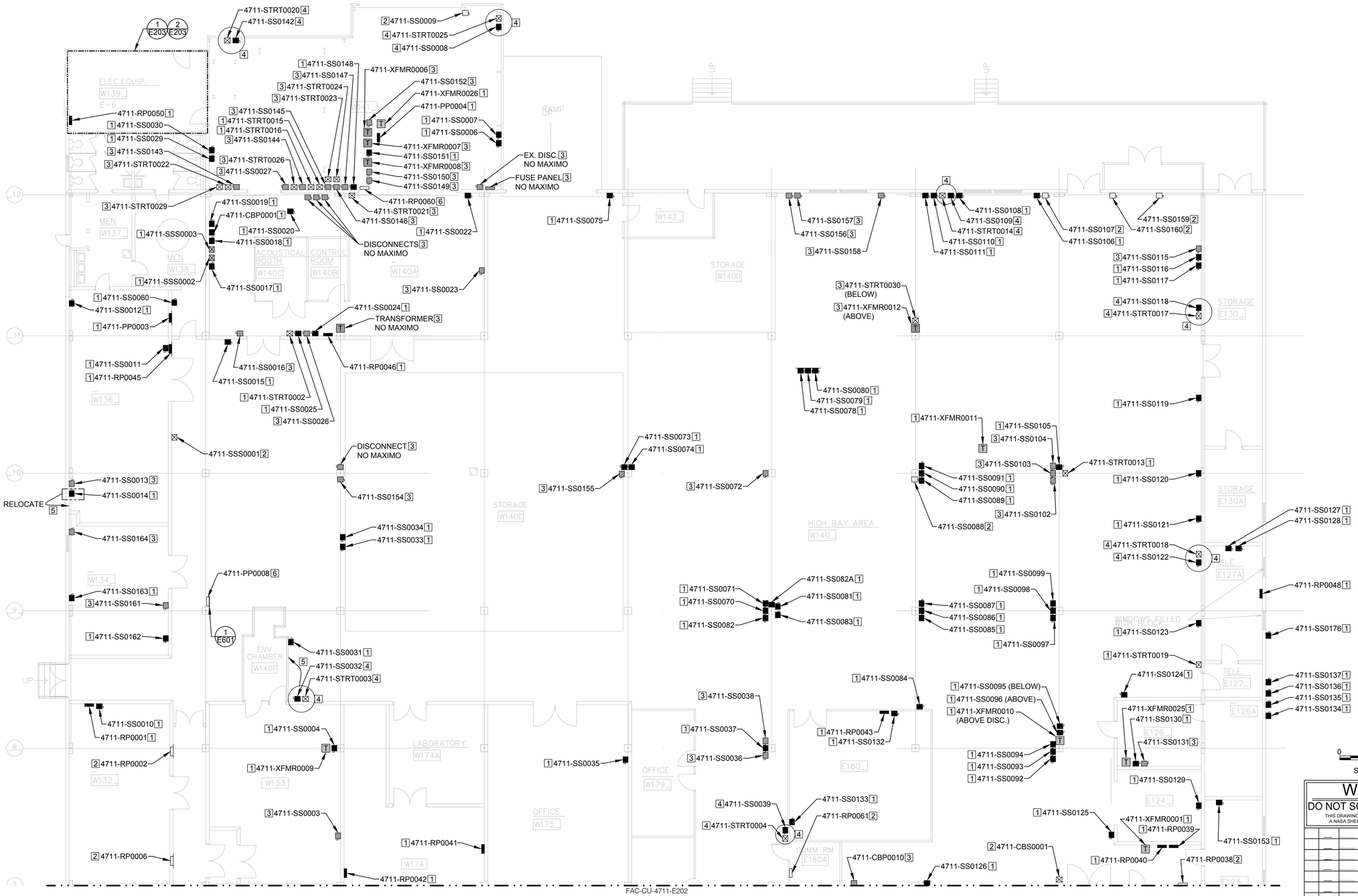

PLAN NOTES

1. REPLACE EXISTING TRANSFORMER, PANEL, DISCONNECT, CIRCUIT BREAKER PANEL OR STARTER WITH NEW TRANSFORMER, PANEL, DISCONNECT, CIRCUIT BREAKER PANEL OR STARTER. SEE TRANSFORMER, PANEL, DISCONNECT, CIRCUIT BREAKER PANEL OR STARTER SCHEDULE WITH ASSOCIATED MAXIMO NUMBER.
2. EXISTING TRANSFORMER, PANEL, DISCONNECT, STARTER, SWITCHBOARD OR CIRCUIT BREAKER PANEL TO REMAIN.
3. REMOVE EXISTING TRANSFORMER, PANEL, DISCONNECT OR STARTER AND ALL ASSOCIATED CONDUIT AND CONDUCTORS.
4. EXISTING STARTER AND DISCONNECT TO BE REMOVED AND REPLACED WITH A COMBINATION STARTER/DISCONNECT DEVICE. SEE SCHEDULE ON SHEET FAC-CU-4711-E708.
5. EQUIPMENT TO BE RELOCATED AS SHOWN.
6. NEW PANEL. SEE SCHEDULE FAC-CU-4711-E707.

GENERAL NOTES

1. SEE ONE-LINE DIAGRAMS SHEET FAC-CU-4711-E501-E508 WITH ASSOCIATED MAXIMO NUMBER FOR ADDITIONAL INFORMATION.
2. REFER TO SHEET FAC-CU-4711-E801 AND FAC-CU-4711-E802 FOR DISCONNECT SCHEDULES.
3. REFER TO SHEET FAC-CU-4711-E801 FOR CIRCUIT BREAKER DISCONNECT SCHEDULES.
4. REFER TO SHEET FAC-CU-4711-E802 FOR TRANSFORMER SCHEDULES.
5. REFER TO SHEET FAC-CU-4711-E708 FOR STARTER, COMBINATION STARTER AND CIRCUIT BREAKER STARTER SCHEDULE.
6. REFER TO SHEET FAC-CU-4711-E708 FOR SWITCHBOARD SCHEDULES.
7. REFER TO SHEET FAC-CU-4711-E701-E708 FOR PANEL SCHEDULES.
8. REFER TO SHEET FAC-CU-4711-E601 FOR BASE BID DETAILS.

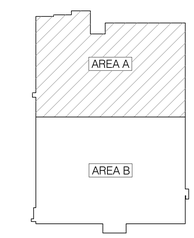

BUILDING 4711
KEY PLAN
NOT TO SCALE

0 4' 8' 16'
SCALE:1/8"=1'-0"

WARNING
DO NOT SCALE THIS DRAWING
THIS DRAWING WAS DESIGNED TO BE PRINTED AT
A NASA SHEET SIZE: MSFC STD. SIZE 40" X 28"

ALABAMA REGISTERED No. 26967 PROFESSIONAL ENGINEER JOHN AVERRETT 9/4/15

REV	BY	DATE	REVISION	C.I. NO.	APPROVED

Marshall Space Flight Center
Huntsville, Alabama 35812

BUILDING 4711
REVITALIZE ELECTRICAL SYSTEMS

ELECTRICAL PLAN - 1ST FLOOR AREA A

AE FIRM: GOODWYN | MILLS | CAWOOD — MERRICK & COMPANY — JOINT VENTURE

NASA AE CONTRACT NO. NNM12AA49C NNM14AA72T

SUBMITTED: JENNIFER LANDRY
AE: DATE: 09/15/15
DESIGNED S. CRITTENDEN
DRAWN M. PATE
CHECKED J. AVERRETT
SCALE: AS SHOWN

APPROVAL RECOMMENDED: CODY GOODMAN, AS22 PROJECT A/E
APPROVAL RECOMMENDED: TIM DOSS, AS22 SUPPORT A/E
APPROVAL RECOMMENDED: PHIL HENDRIX, AS22 TEAM LEAD
SPEC. NO. FAC-M5063

APPROVED: NELSON OLINGER, AS22 GROUP LEAD DATE: 09/15/15

DRAWING NO. FAC-CU-4711-E201
SHEET 08 OF 38

FINAL SUBMITTAL
ISSUED FOR CONSTRUCTION
REF. NO. E201

1 E201 ELECTRICAL PLAN - 1ST FLOOR AREA A
1/8"=1'-0"

Master Bid Disk 10-06-2015

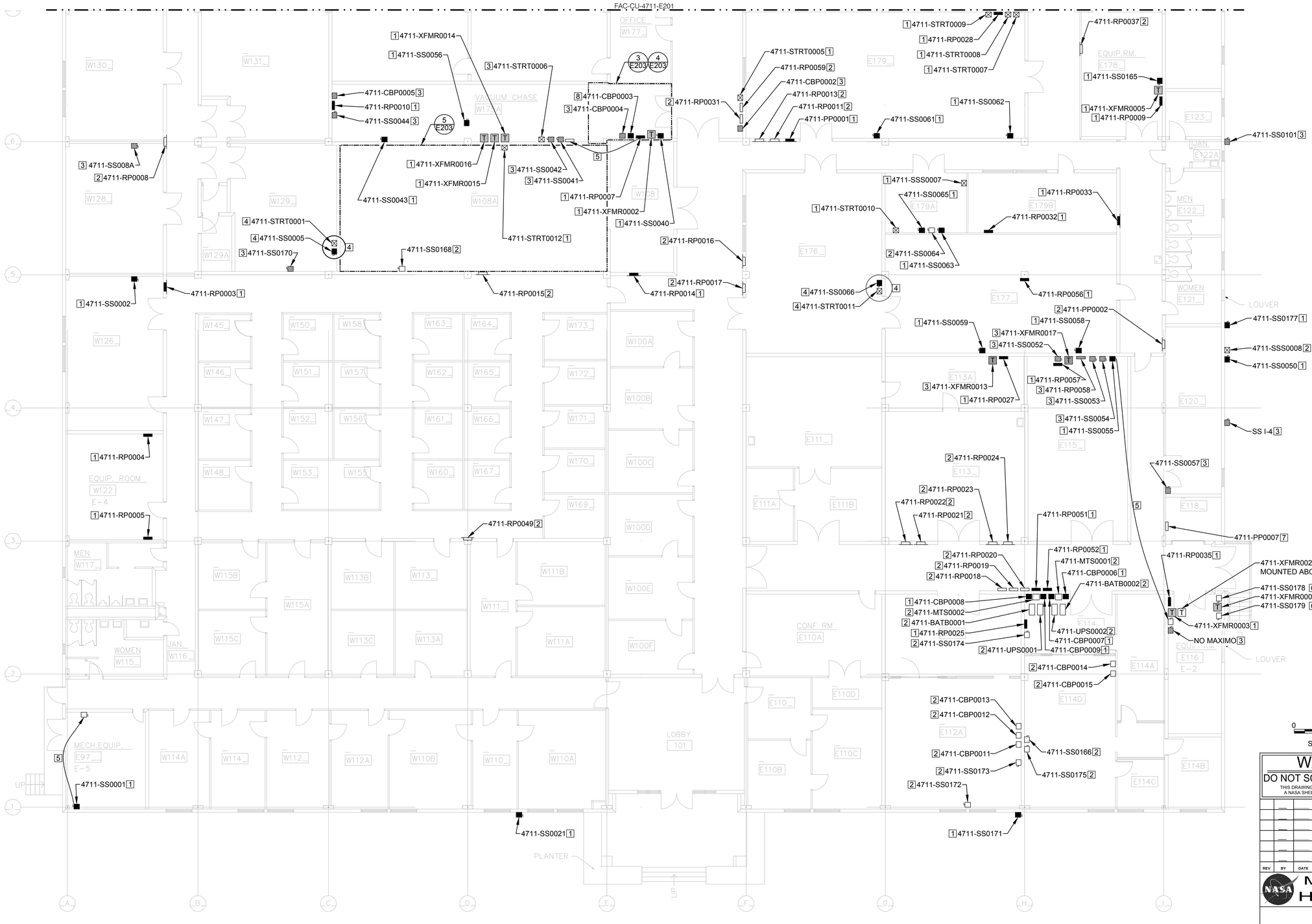

PLAN NOTES

1. REPLACE EXISTING TRANSFORMER, PANEL, DISCONNECT, CIRCUIT BREAKER PANEL OR STARTER WITH NEW TRANSFORMER, PANEL, DISCONNECT, CIRCUIT BREAKER PANEL OR STARTER. SEE TRANSFORMER, PANEL, DISCONNECT, CIRCUIT BREAKER PANEL OR STARTER SCHEDULE WITH ASSOCIATED MAXIMO NUMBER.
2. EXISTING TRANSFORMER, PANEL, DISCONNECT, STARTER, SWITCHBOARD OR CIRCUIT BREAKER PANEL TO REMAIN.
3. REMOVE EXISTING TRANSFORMER, PANEL, DISCONNECT OR STARTER AND ALL ASSOCIATED CONDUIT AND CONDUCTORS.
4. EXISTING STARTER AND DISCONNECT TO BE REMOVED AND REPLACED WITH A COMBINATION STARTER/DISCONNECT DEVICE. SEE SCHEDULE ON SHEET FAC-CU-4711-E707.
5. EQUIPMENT TO BE RELOCATED AS SHOWN.
6. NEW DISCONNECT TO BE INSTALLED.
7. NEW PANEL. SEE SCHEDULE ON SHEET FAC-CU-4711-707.
8. 4711-CBP0003 TO BE REMOVED AND ALL ASSOCIATED CONDUIT AND CONDUCTORS. NEW 4711-CBP0003 SHALL BE INSTALLED IN RM. W139 AS SHOWN ON 2/FAC-CU-4711-E203.
9. NEW 4711-XFMR0028 TO BE LOCATED ABOVE 4711-XFMR0003.

GENERAL NOTES

1. SEE ONE-LINE DIAGRAMS SHEET FAC-CU-4711-E501-E508 WITH ASSOCIATED MAXIMO NUMBER FOR ADDITIONAL INFORMATION.
2. REFER TO SHEET FAC-CU-4711-E801 AND FAC-CU-4711-E802 FOR DISCONNECT SCHEDULES.
3. REFER TO SHEET FAC-CU-4711-E801 FOR CIRCUIT BREAKER DISCONNECT SCHEDULES.
4. REFER TO SHEET FAC-CU-4711-E802 FOR TRANSFORMER SCHEDULES.
5. REFER TO SHEET FAC-CU-4711-E708 FOR STARTER OR COMBINATION STARTER SCHEDULE.
7. REFER TO SHEET FAC-CU-4711-E701-E708 FOR PANEL SCHEDULES.
8. REFER TO SHEET FAC-CU-4711-E601 FOR BASE BID DETAILS.

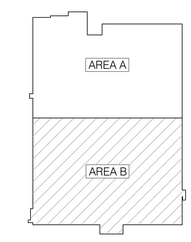

BUILDING 4711
KEY PLAN
NOT TO SCALE

SCALE:1/8"=1'-0"

WARNING
DO NOT SCALE THIS DRAWING
THIS DRAWING WAS DESIGNED TO BE PRINTED AT A NASA SHEET SIZE: MSFC STD. SIZE 40" X 28"

ALABAMA REGISTERED No. 26967 PROFESSIONAL ENGINEER JOHN AVERRETT 9/14/15

REV	BY	DATE	REVISION	C.I. NO.	APPROVED

Marshall Space Flight Center
Huntsville, Alabama 35812

BUILDING 4711
REVITALIZE ELECTRICAL SYSTEMS

ELECTRICAL PLAN - 1ST FLOOR AREA B

AE FIRM: GOODWYN MILLS CAWOOD / MERRICK & COMPANY — JOINT VENTURE

NASA AE CONTRACT NO. NNM12AA49C NNM14AA72T

SUBMITTED: JENNIFER LANDRY
AE: DATE: 09/15/15
DESIGNED S. CRITTENDEN
DRAWN M. PATE
CHECKED J. AVERRETT
SCALE: AS SHOWN

APPROVAL RECOMMENDED: CODY GOODMAN, AS22 PROJECT A/E
APPROVAL RECOMMENDED: TIM DOSS, AS22 SUPPORT A/E
APPROVAL RECOMMENDED: PHIL HENDRIX, AS22 TEAM LEAD
SPEC. NO. FAC-M5063

APPROVED: NELSON OLINGER, AS22 GROUP LEAD DATE: 09/15/15

DRAWING NO. FAC-CU-4711-E202
SHEET 09 OF 38

FINAL SUBMITTAL
ISSUED FOR CONSTRUCTION
REF. NO. E202

1 / E202 ELECTRICAL PLAN - 1ST FLOOR AREA B
1/8"=1'-0"

Master Bid Disk 10-06-2015

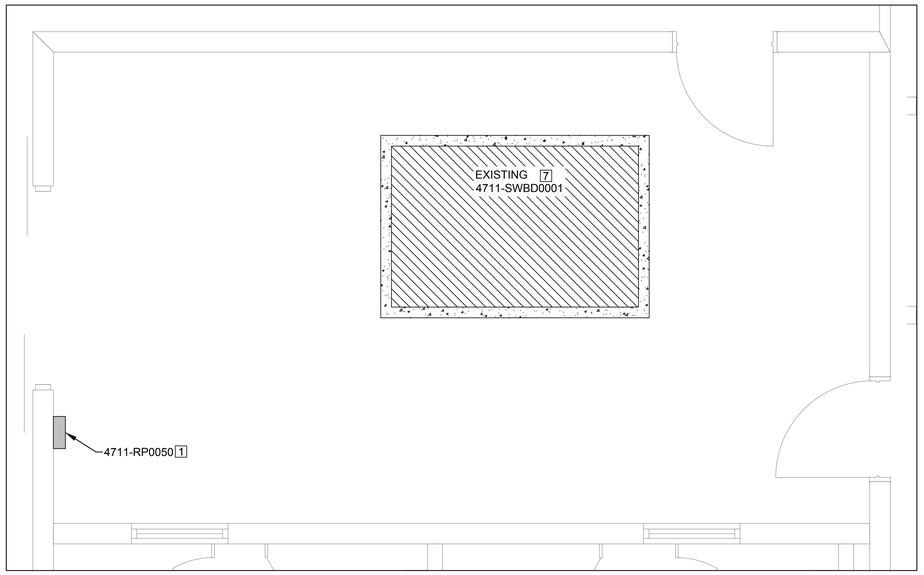

1 ELECTRICAL ROOM W139 - DEMO PLAN
E201 E203 1/2"=1'-0"

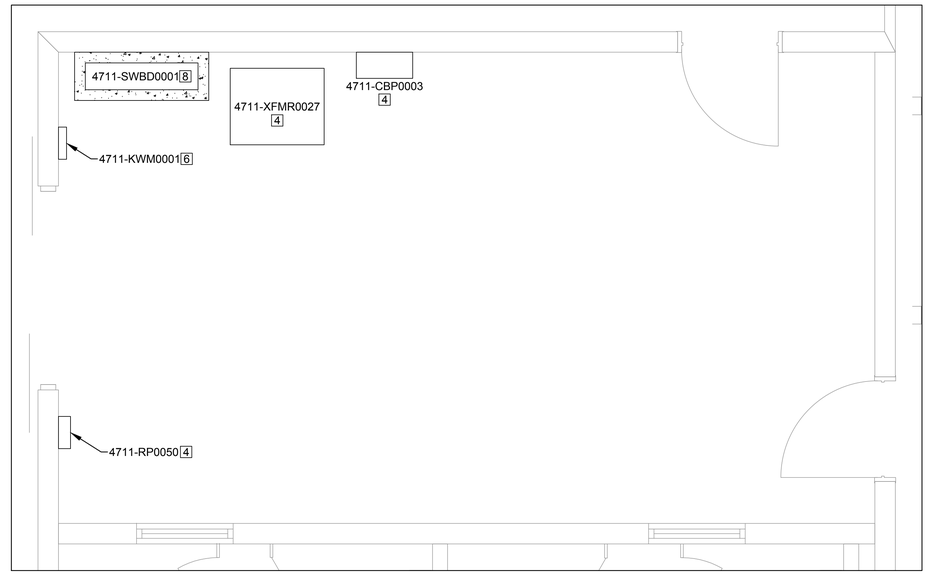

2 ELECTRICAL ROOM W139 - NEW WORK
E201 E203 1/2"=1'-0"

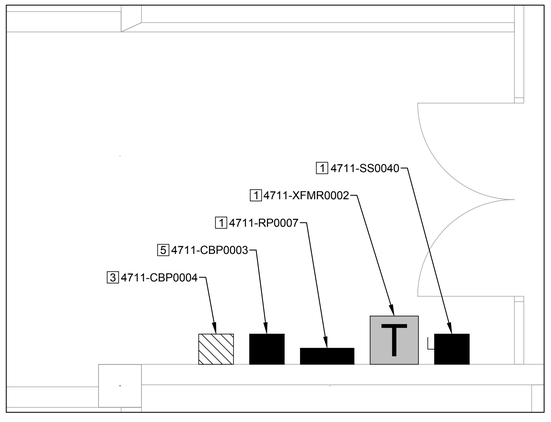

3 VACUUM CHASE W175A - DEMO PLAN
E202 E203 1/2"=1'-0"

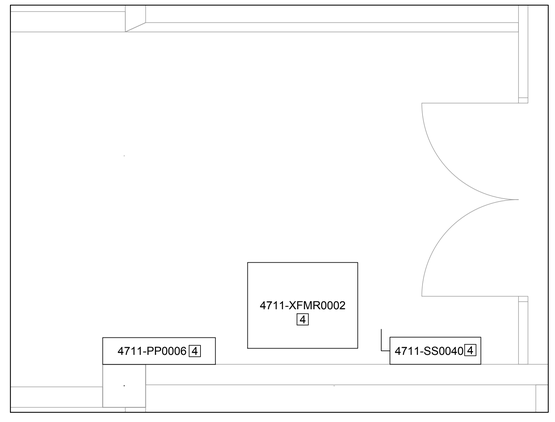

4 VACUUM CHASE W175A - NEW WORK
E202 E203 1/2"=1'-0"

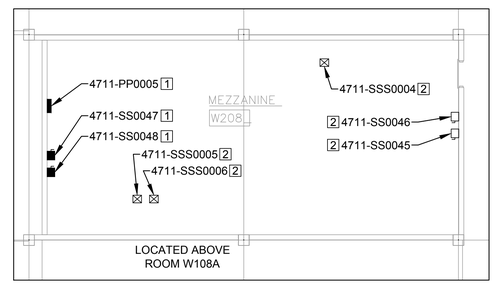

5 MEZZANINE W208 ELECTRICAL PLAN
E203 1/8"=1'-0" **LOCATED ABOVE ROOM W108A**

PLAN NOTES

1. REPLACE EXISTING PANEL, TRANSFORMER OR DISCONNECT WITH NEW PANEL, TRANSFORMER OR DISCONNECT. SEE PANEL, TRANSFORMER OR DISCONNECT SCHEDULE WITH ASSOCIATED MAXIMO NUMBER.
2. EXISTING PANEL, DISCONNECT OR STARTER TO REMAIN.
3. EXISTING CIRCUIT BREAKER TO BE REMOVED AND ALL ASSOCIATED CONDUIT AND CONDUCTORS.
4. NEW PANEL, TRANSFORMER, CIRCUIT BREAKER OR DISCONNECT. SEE PANEL, TRANSFORMER, CIRCUIT BREAKER, DISCONNECT OR SCHEDULE FOR ADDITIONAL INFORMATION.
5. 4711-CBP0003 TO BE REMOVED AND ALL ASSOCIATED CONDUIT AND CONDUCTORS. NEW 4711-CBP0003 SHALL BE INSTALLED IN RM. W139 AS SHOWN ON 2/FAC-CU-4711-E203.
6. NEW 4711-KWM0001 TO BE INSTALLED. SIEMENS PAC4200 WITH MODBUS MODULE, BASE BID.
7. EXISTING SWITCHBOARD 4711-SWBD0001 AND CONCRETE PAD TO BE REMOVED, CONDUIT AND CONDUCTORS SHALL BE INTERCEPTED TO NEW INSTALLED SWITCHBOARD 4711-SWBD0001 LOCATION. SEE 2/FAC-CU-4711-E203 FOR LOCATION.
8. INSTALL NEW 4711-SWBD0001 AND INTERCEPT EXISTING CONDUIT AND CONDUCTORS FROM EXISTING LOCATION. SEE SWITCHBOARD SCHEDULE FOR ADDITIONAL INFORMATION.

GENERAL NOTES

1. SEE ONE-LINE DIAGRAMS SHEET FAC-CU-4711-E501-E508 WITH ASSOCIATED MAXIMO NUMBER FOR ADDITIONAL INFORMATION.
2. REFER TO SHEET FAC-CU-4711-E801 AND FAC-CU-4711-E802 FOR DISCONNECT SCHEDULES.
3. REFER TO SHEET FAC-CU-4711-E801 FOR CIRCUIT BREAKER DISCONNECT SCHEDULES.
4. REFER TO SHEET FAC-CU-4711-E802 FOR TRANSFORMER SCHEDULES.
5. REFER TO SHEET FAC-CU-4711-E708 FOR COMBINATION STARTER SCHEDULE.
6. REFER TO SHEET FAC-CU-4711-E708 FOR SWITCHBOARD SCHEDULES.
7. REFER TO SHEET FAC-CU-4711-E701-E708 FOR PANEL SCHEDULES.
8. REFER TO SHEET FAC-CU-4711-E601 FOR BASE BID DETAILS.

BUILDING 4711
KEY PLAN
NOT TO SCALE

WARNING
DO NOT SCALE THIS DRAWING
THIS DRAWING WAS DESIGNED TO BE PRINTED AT
A NASA SHEET SIZE: MSFC STD. SIZE 40" X 28"

ALABAMA REGISTERED No. 26967 PROFESSIONAL ENGINEER JOHN AVERRETT 09/14/15

REV	BY	DATE	REVISION	C.I. NO.	APPROVED

Marshall Space Flight Center
Huntsville, Alabama 35812

BUILDING 4711
REVITALIZE ELECTRICAL SYSTEMS

LARGE SCALE ELECTRICAL PLANS

AE FIRM: GOODWYN | MILLS | CAWOOD — MERRICK & COMPANY — JOINT VENTURE

NASA AE CONTRACT NO. NNM12AA49C NNM14AA72T

SUBMITTED: JENNIFER LANDRY
AE: DATE: 09/15/15
DESIGNED S. CRITTENDEN
DRAWN M. PATE
CHECKED J. AVERRETT
SCALE: AS SHOWN

APPROVAL RECOMMENDED: CODY GOODMAN, AS22 PROJECT A/E
APPROVAL RECOMMENDED: TIM DOSS, AS22 SUPPORT A/E
APPROVAL RECOMMENDED: PHIL HENDRIX, AS22 TEAM LEAD
SPEC. NO. FAC-M5063

APPROVED: NELSON OLINGER, AS22 GROUP LEAD DATE: 09/15/15

DRAWING NO. FAC-CU-4711-E203
SHEET 10 OF 38

FINAL SUBMITTAL
ISSUED FOR CONSTRUCTION
REF. NO. E203

Master Bid Disk 10-06-2015

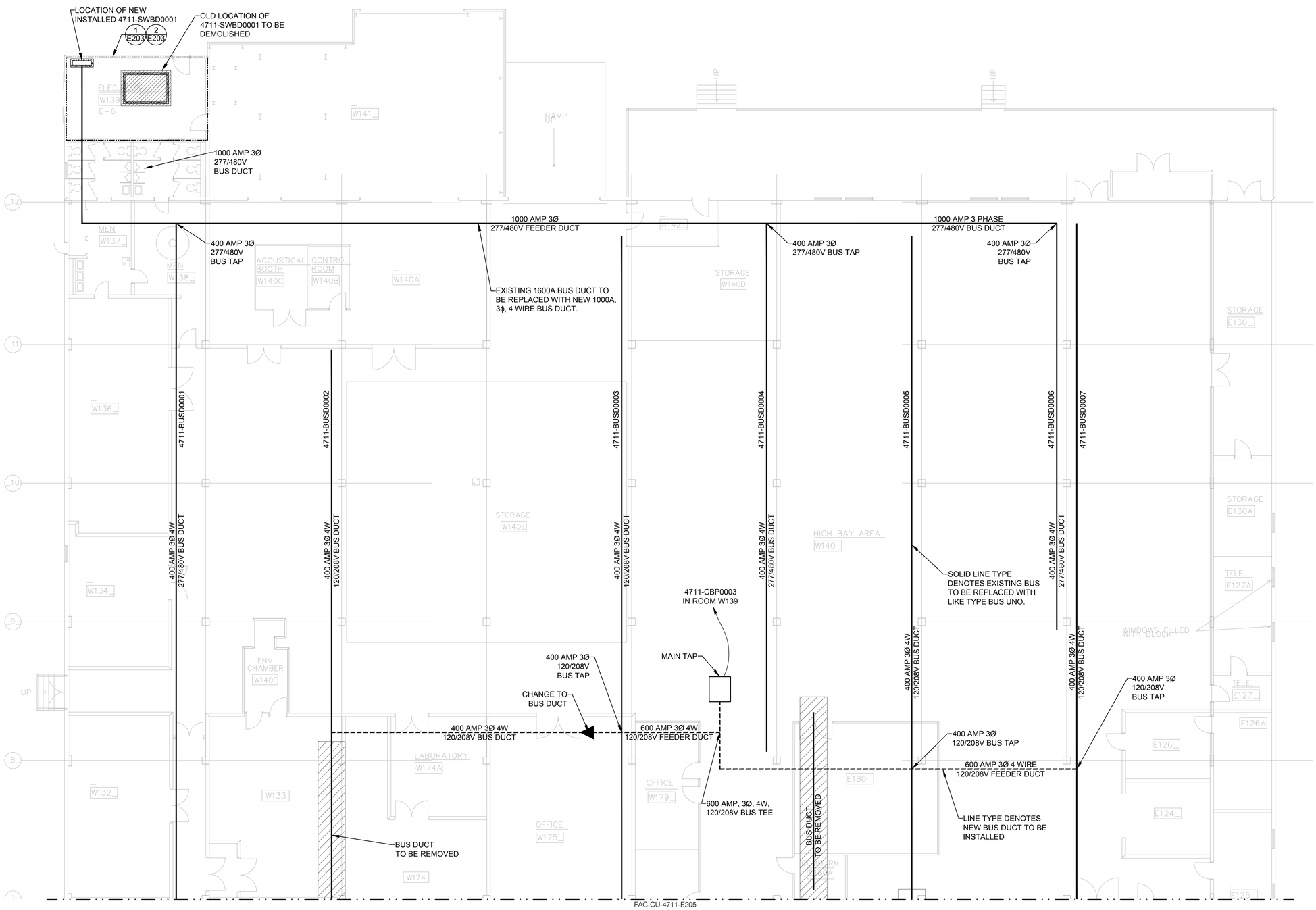

1 E204 BUS DUCT FLOOR PLAN - 1ST FLOOR AREA A

SCALE: 1/8"=1'-0"

GENERAL NOTES

1. ALL BUS DUCT IS TO BE 3Ø, 4 WIRE.
2. NEW BUS DUCT TO BE INSTALLED IN ACCESSIBLE LOCATION ADJACENT TO EXISTING DUCT. AFTER DUCT CROSSOVER IS COMPLETE, EXISTING BUS DUCT IS TO BE REMOVED.
3. BUS DUCT LOCATED OVER AREAS OF CONCERN AS SHOWN ON FAC-CU-4711-A002 SHALL HAVE ALL COMBUSTIBLE MATERIALS REMOVED.
4. COORDINATE AREAS OF CONCERN WITH SHEET FAC-CU-4711-A002.

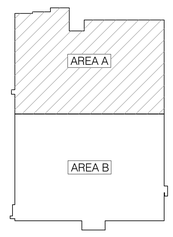

BUILDING 4711 KEY PLAN

NOT TO SCALE

0 4' 8' 16'

SCALE:1/8"=1'-0"

WARNING

DO NOT SCALE THIS DRAWING

THIS DRAWING WAS DESIGNED TO BE PRINTED AT A NASA SHEET SIZE: MSFC STD. SIZE 40" X 28"

REV	BY	DATE	REVISION	C.I. NO.	APPROVED

Marshall Space Flight Center
Huntsville, Alabama 35812

BUILDING 4711
REVITALIZE ELECTRICAL SYSTEMS

BUS DUCT FLOOR PLAN - 1ST FLOOR AREA A

AE FIRM: GOODWYN MILLS CAWOOD / MERRICK & COMPANY — JOINT VENTURE

NASA AE CONTRACT NO. NNM12AA49C NNM14AA72T

SUBMITTED: JENNIFER LANDRY
AE: DATE: 09/15/15
DESIGNED S. CRITTENDEN
DRAWN M. PATE
CHECKED J. AVERRETT
SCALE: AS SHOWN

APPROVAL RECOMMENDED: CODY GOODMAN, AS22 PROJECT A/E
APPROVAL RECOMMENDED: TIM DOSS, AS22 SUPPORT A/E
APPROVAL RECOMMENDED: PHIL HENDRIX, AS22 TEAM LEAD
SPEC. NO. FAC-M50063

APPROVED: NELSON OLINGER, AS22 GROUP LEAD DATE: 09/15/15

DRAWING NO. FAC-CU-4711-E204

SHEET 11 OF 38

FINAL SUBMITTAL
ISSUED FOR CONSTRUCTION

REF. NO. E204

Master Bid Disk 10-06-2015

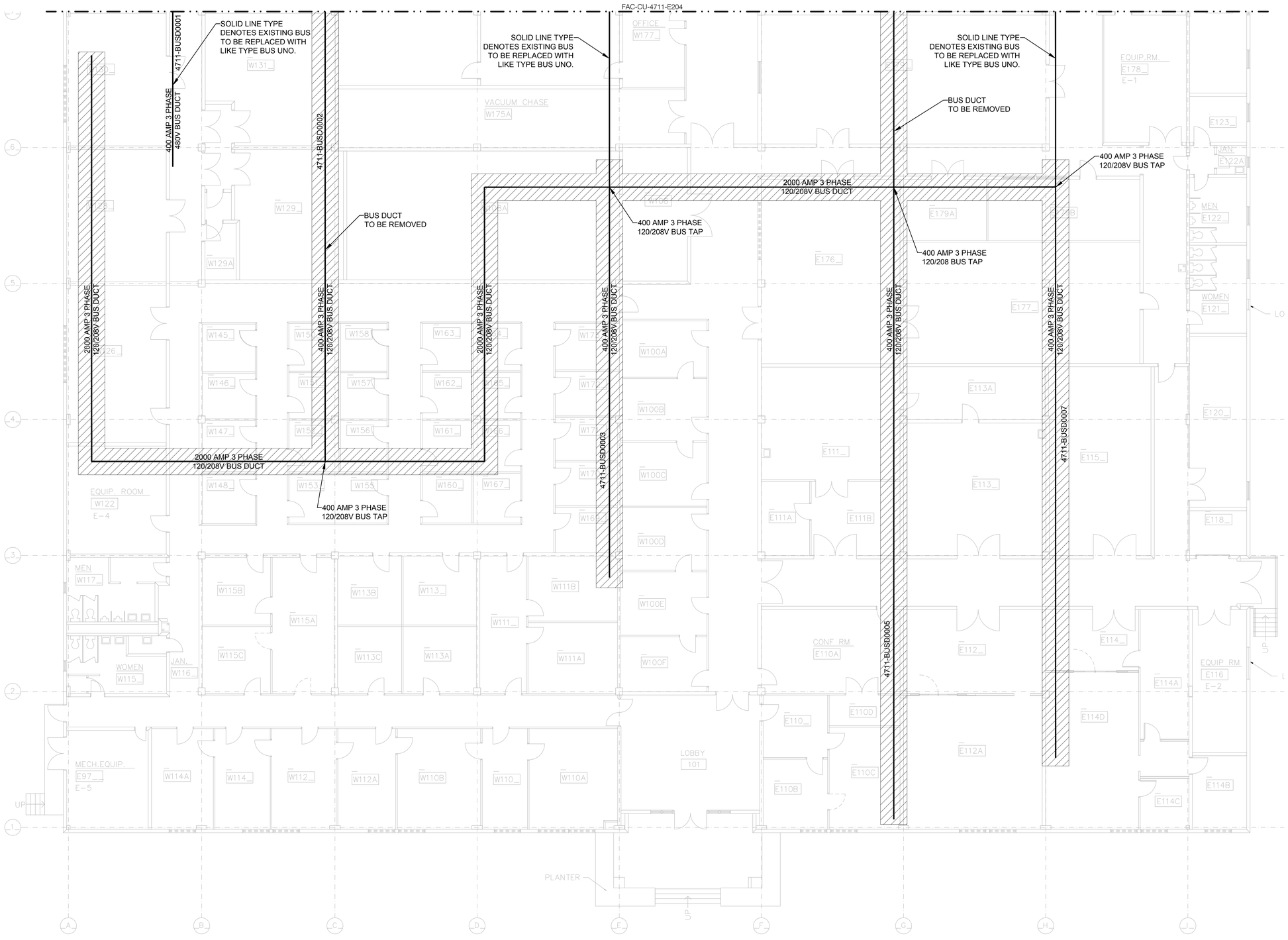

1 E205 BUS DUCT FLOOR PLAN - 1ST FLOOR AREA B
SCALE: 1/8"=1'-0"

GENERAL NOTES

1. ALL BUS DUCT IS TO BE 3Ø, 4 WIRE.
2. NEW BUS DUCT TO BE INSTALLED IN ACCESSIBLE LOCATION ADJACENT TO EXISTING DUCT. AFTER DUCT CROSSOVER IS COMPLETE, EXISTING BUS DUCT IS TO BE REMOVED.
3. BUS DUCT LOCATED OVER AREAS OF CONCERN AS SHOWN ON FAC-CU-4711-A002 SHALL HAVE ALL COMBUSTIBLE MATERIALS REMOVED.
4. COORDINATE AREAS OF CONCERN WITH SHEET FAC-CU-4711-A002.

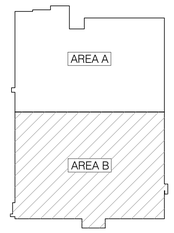

BUILDING 4711 KEY PLAN
NOT TO SCALE

0 4' 8' 16'
SCALE:1/8"=1'-0"

WARNING
DO NOT SCALE THIS DRAWING
THIS DRAWING WAS DESIGNED TO BE PRINTED AT A NASA SHEET SIZE: MSFC STD. SIZE 40" X 28"

ALABAMA REGISTERED No. 26967 PROFESSIONAL ENGINEER 9/4/15 JOHN AVERRETT

REV	BY	DATE	REVISION	C.I. NO.	APPROVED

Marshall Space Flight Center
Huntsville, Alabama 35812

BUILDING 4711
REVITALIZE ELECTRICAL SYSTEMS

BUS DUCT FLOOR PLAN - 1ST FLOOR AREA B

AE FIRM: GOODWYN | MILLS | CAWOOD — MERRICK & COMPANY — JOINT VENTURE

NASA AE CONTRACT NO. NNM12AA49C NNM14AA72T

SUBMITTED: JENNIFER LANDRY
AE: DATE: 09/15/15
DESIGNED S. CRITTENDEN
DRAWN M. PATE
CHECKED J. AVERRETT
SCALE: AS SHOWN

APPROVAL RECOMMENDED: CODY GOODMAN, AS22 PROJECT A/E
APPROVAL RECOMMENDED: TIM DOSS, AS22 SUPPORT A/E
APPROVAL RECOMMENDED: PHIL HENDRIX, AS22 TEAM LEAD
SPEC. NO. FAC-M5063

APPROVED: NELSON OLINGER, AS22 GROUP LEAD DATE: 09/15/15

DRAWING NO. FAC-CU-4711-E205
SHEET 12 OF 38

FINAL SUBMITTAL
ISSUED FOR CONSTRUCTION
REF. NO. E205

Master Bid Disk 10-06-2015

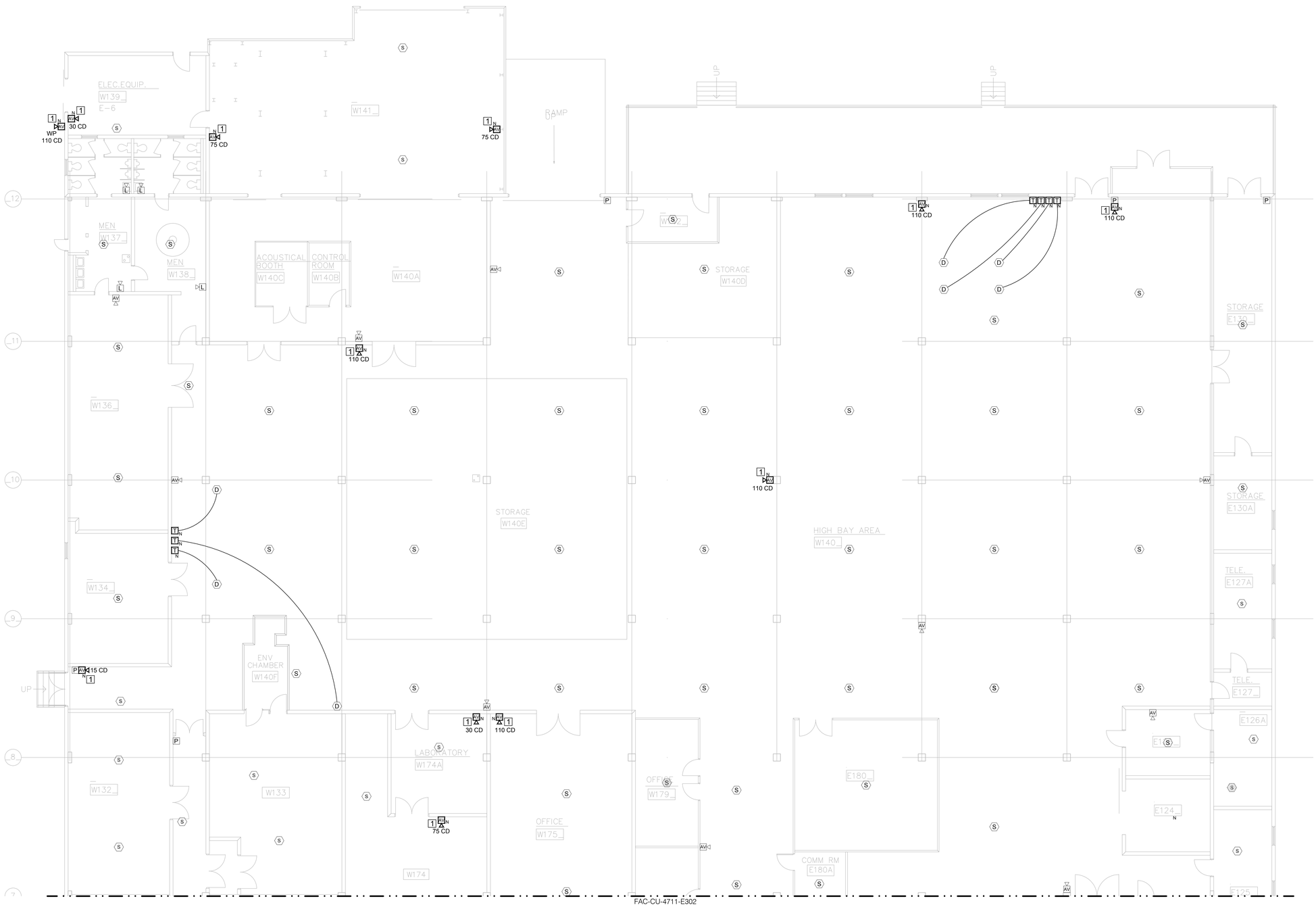

FAC-CU-4711-E302

1 E301 FIRE ALARM PLAN A - FIRST FLOOR AREA A ADD ALT. #1

SCALE: 1/8"=1'-0"

PLAN NOTES

1 INTERCEPT AND EXTEND CIRCUITRY TO INSTALL NEW DEVICE.

GENERAL NOTES

1. UNLESS OTHERWISE NOTED, ALL DEVICES ARE EXISTING.
2. REPLACE TILE UNDER REMOVED SMOKE DETECTOR WITH NEW CEILING TILE TO MATCH EXISTING.

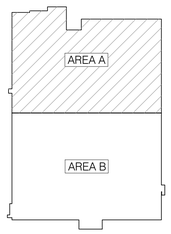

BUILDING 4711
KEY PLAN
NOT TO SCALE

0 4' 8' 16'
SCALE:1/8"=1'-0"

WARNING
DO NOT SCALE THIS DRAWING
THIS DRAWING WAS DESIGNED TO BE PRINTED AT A NASA SHEET SIZE: MSFC STD. SIZE 40" X 28"

ALABAMA REGISTERED No. 26967 PROFESSIONAL ENGINEER JOHN AVERRETT 9/4/15

REV	BY	DATE	REVISION	C.I. NO.	APPROVED

Marshall Space Flight Center
Huntsville, Alabama 35812

BUILDING 4711
REVITALIZE ELECTRICAL SYSTEMS
FIRE ALARM PLAN - 1ST FLOOR AREA A
ADD ALT. #1

AE FIRM: GOODWYN MILLS CAWOOD / MERRICK & COMPANY JOINT VENTURE

NASA AE CONTRACT NO. NNM12AA49C NNM14AA72T

SUBMITTED: JENNIFER LANDRY
AE: DATE: 09/15/15
DESIGNED S. CRITTENDEN
DRAWN M. PATE
CHECKED J. AVERRETT
SCALE: AS SHOWN

APPROVAL RECOMMENDED: CODY GOODMAN, AS22 PROJECT A/E
APPROVAL RECOMMENDED: TIM DOSS, AS22 SUPPORT A/E
APPROVAL RECOMMENDED: PHIL HENDRIX, AS22 TEAM LEAD
SPEC. NO. FAC-M5063

APPROVED: NELSON OLINGER, AS22 GROUP LEAD DATE: 09/15/15

DRAWING NO. FAC-CU-4711-E301
SHEET 13 OF 38

FINAL SUBMITTAL
ISSUED FOR CONSTRUCTION
REF. NO. E301

Master Bid Disk 10-06-2015

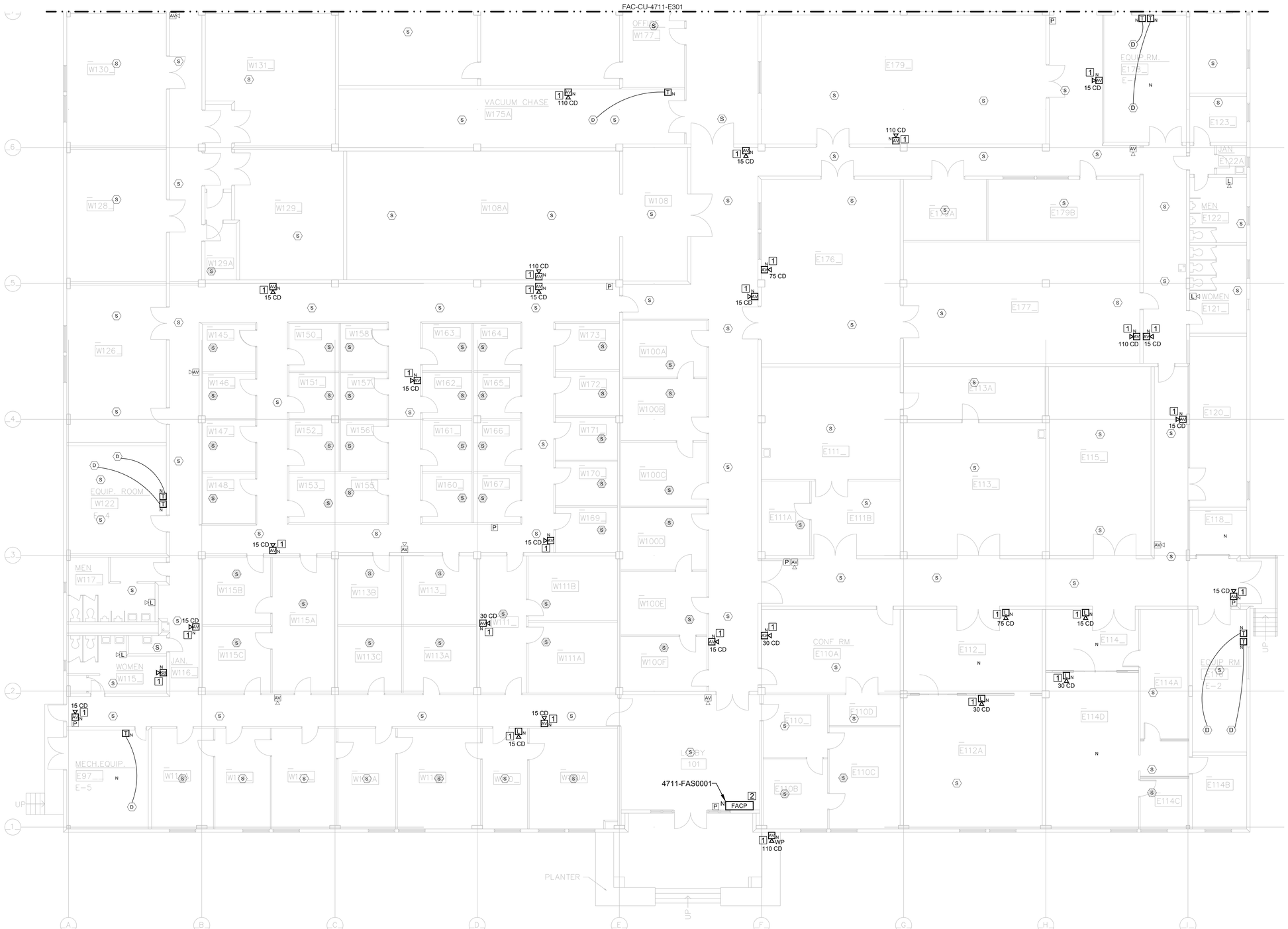

1 E302 FIRE ALARM PLAN B - FIRST FLOOR AREA B ADD ALT. #1
SCALE: 1/8"=1'-0"

PLAN NOTES

1. INTERCEPT AND EXTEND CIRCUITRY TO INSTALL NEW DEVICE.
2. NEW FIRE ALARM CONTROL PANEL TO REPLACE EXISTING SYSTEM. BASIS OF DESIGN IS SIMPLEX 4100ES. REUSE EXISTING SUPPORTS.

GENERAL NOTES

1. UNLESS OTHERWISE NOTED, ALL DEVICES ARE EXISTING.
2. REPLACE TILE UNDER REMOVED SMOKE DETECTOR WITH NEW CEILING TILE TO MATCH EXISTING.
3. EXISTING FACP IS TO BE REMOVED AND GIVEN TO COR AFTER THE NEW SYSTEM HAS BEEN INTEGRATED.

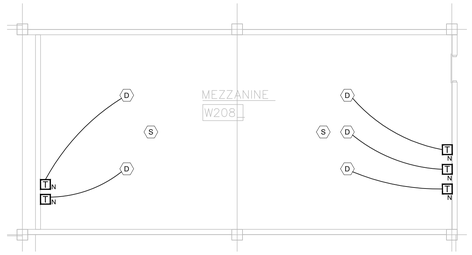

2 E302 MEZZANINE FIRE ALARM PLAN
SCALE: 1/8"=1'-0"

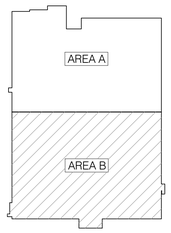

BUILDING 4711
KEY PLAN
NOT TO SCALE

0 4' 8' 16'
SCALE:1/8"=1'-0"

LABAMA REGISTERED No. 26967 PROFESSIONAL 9/4/15 ENGINEER JOHN AVERRETT

WARNING
DO NOT SCALE THIS DRAWING
THIS DRAWING WAS DESIGNED TO BE PRINTED AT A NASA SHEET SIZE: MSFC STD. SIZE 40" X 28"

REV	BY	DATE	REVISION	C.I. NO.	APPROVED

Marshall Space Flight Center
Huntsville, Alabama 35812

BUILDING 4711
REVITALIZE ELECTRICAL SYSTEMS
FIRE ALARM PLAN - 1ST FLOOR AREA B
ADD ALT. #1

AE FIRM: GOODWYN | MILLS | CAWOOD — MERRICK & COMPANY — JOINT VENTURE

NASA AE CONTRACT NO. NNM12AA49C NNM14AA72T

SUBMITTED: JENNIFER LANDRY
AE: DATE: 09/15/15
DESIGNED S. CRITTENDEN
DRAWN M. PATE
CHECKED J. AVERRETT
SCALE:

APPROVAL RECOMMENDED: CODY GOODMAN, AS22 PROJECT A/E
APPROVAL RECOMMENDED: TIM DOSS, AS22 SUPPORT A/E
APPROVAL RECOMMENDED: PHIL HENDRIX, AS22 TEAM LEAD
SPEC. NO. FAC-M5063

APPROVED: NELSON OLINGER, AS22 GROUP LEAD DATE: 09/15/15

DRAWING NO. FAC-CU-4711-E302
SHEET 14 OF 38

FINAL SUBMITTAL
ISSUED FOR CONSTRUCTION
REF. NO. E302

Master Bid Disk 10-06-2015

FIRE ALARM OPERATIONS MATRIX	REQUIRED SYSTEM OUTPUTS											
	ANNUNCIATION / INDICATION					OFF PREMISES SIGNAL TRANSMISSION				ANCILLARY FUNCTIONS		
SYSTEM INPUTS	ACTUATE AUDIBLE AND VISIBLE FIRE ALARM NOTIFICATION APPLIANCES	ACUTATE AUDIBLE/VISIBLE ALARM INDICATOR AT FACP	ACTUATE AUDIBLE/VISUAL SUPERVISORY INDICATOR AT FACP	ACTUATE AUDIBLE/VISUAL TROUBLE INDICATOR AT FACP	PROVIDE DEVICE/CIRCUIT INDICATION AT FACP	TRANSMIT ALARM SIGNAL TO MSFC F.A. NETWORK ALARM RECEIVING STATION	TRANSMIT SUPV. SIGNAL TO MSFC F.A. NETWORK ALARM RECEIVING STATION	TRANSMIT TROUBLE SIGNAL TO MSFC F.A. NETWORK ALARM RECEIVING STATION	TRANSMIT SIGNAL TO REMOTE MONITORING SYSTEM (UCS)	SHUTDOWN AFFECTED AIR HANDLING UNIT(S)	TRANSFER FIRE ALARM SYSTEM TO SECONDARY POWER	RELEASE MAGNETIC DOOR HOLDERS
ALARM SIGNALS												
FIRE ALARM MANUAL PULL STATION	✓	✓			✓	✓			✓	✓		✓
HEAT DETECTION	✓	✓			✓	✓			✓	✓		✓
SMOKE DETECTOR ACTUATION	✓	✓			✓	✓			✓	✓		✓
SUPERVISORY SIGNALS												
DUCT SMOKE DETECTOR			✓		✓		✓		✓	✓		
TROUBLE SIGNALS												
OPEN CIRCUIT				✓				✓				
CIRCUIT GROUND FAULT				✓				✓				
AC POWER FAILURE				✓				✓			✓	

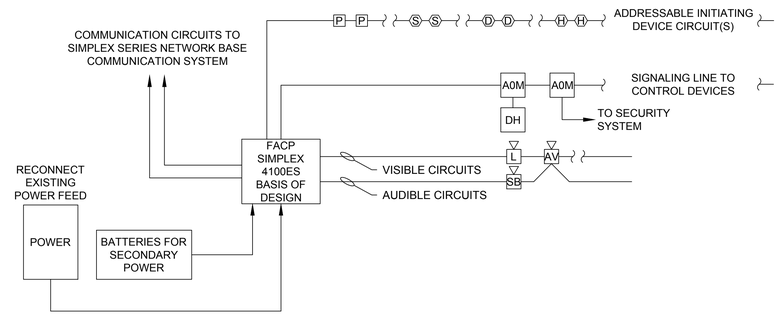

1 E303 FIRE ALARM RISER DIAGRAM

NOT TO SCALE

GENERAL FIRE ALARM SYSTEM NOTES

1. FIRE ALARM SYSTEM CONTROL PANEL SHALL BE AN ADDRESSABLE SYSTEM USING SIGNALING LINE CIRCUITS.
2. PRIOR TO ORDERING MATERIALS AND PROCEEDING WITH INSTALLATION, THE CONTRACTORS SHALL VERIFY ALL MEASUREMENTS AND FIELD CONDITIONS THAT AFFECT THE WORK. BEFORE PROCEEDING, BRING TO THE ATTENTION OF THE COR FOR RESOLVING ANY DISCREPANCIES IN THE CONTRACT DOCUMENTS THAT AFFECT THE WORK, INCLUDING, BUT NOT LIMITED TO, DIMENSIONAL CONFLICTS AND UNFORESEEN CONDITIONS.
3. INSTALL ALL FIRE ALARM SYSTEM COMPONENTS AND CIRCUITS IN ACCORDANCE WITH THE REQUIREMENTS OF NFPA 72, NFPA 70, AND THE MANUFACTURER'S INSTRUCTIONS.
4. NOTIFICATION APPLIANCE CIRCUITS SHALL BE CLASS 'B' AS DEFINED BY NFPA 72. ALL INITIATING DEVICES AND SIGNAL LINE CIRCUITS SHALL BE CLASS 'B' AS DEFINED BY NFPA 72.
5. SEE SHEETS FAC-CU-4711-E301-E302 FOR NUMBER AND LOCATION OF DUCT SMOKE DETECTORS.
6. INSTALL ALL FIRE ALARM CIRCUITS IN A MANNER THAT MEETS THE REQUIREMENTS OF THE NEC AND THE RECOMMENDATIONS OF THE FIRE ALARM CONTROL EQUIPMENT MANUFACTURER.
7. SIZE CONDUCTORS FOR SIGNALING LINE CIRCUITS AND NOTIFICATION APPLIANCE CIRCUITS FOR THE MAXIMUM NUMBER OF DEVICES OR APPLIANCES PERMITTED ON THE CIRCUIT, BUT INSTALLED CIRCUIT LOADING SHALL BE NO MORE THAN 80 PERCENT OF MAXIMUM PERMITTED LOAD ABOVE ALLOWANCES INDICATED FOR FUTURE BUILDING AND FACILITY ADDITIONS.
8. FURNISH AND INSTALL LINE VOLTAGE SURGE ARRESTORS IN SERIES (UNDER SCREW TERMINALS) WITH THE POWER SUPPLY OF FIRE ALARM CONTROL EQUIPMENT. SURGE SUPPRESSION SHALL MEET THE REQUIREMENTS OF THE FIRE ALARM CONTROL EQUIPMENT MANUFACTURER.
9. SYNCHRONIZE ALL VISIBLE NOTIFICATION APPLIANCES WITHIN A COMMON VIEWING AREA IN ACCORDANCE WITH NFPA 72.
10. INSTALL ALL WALL-MOUNTED AUDIBLE AND VISIBLE NOTIFICATION APPLIANCES AT THE MAXIMUM HEIGHT PERMITTED (96") BY NFPA 72.
11. FIRE STROBE/SPEAKER COMBINATIONS LIGHTS SHALL HAVE A CLEAR LENS. THE LENS SHALL EITHER BE LABELED "ALERT" OR LEFT BLANK.
12. CIRCUIT DISCONNECTING MEANS FOR PRIMARY POWER TO FIRE ALARM CONTROL PANEL SHALL BE FROM A DEDICATED CIRCUIT MARKED IN RED, 'FIRE ALARM CIRCUIT'.
13. THE FIRE ALARM SYSTEM SHALL BE PROVIDED WITH A MICROPROCESSOR BASED FIRE ALARM CONTROL PANEL, ADDRESSABLE TYPE INITIATING DEVICES AND ADDRESSABLE TYPE ALARM NOTIFICATION DEVICES.
14. STRUCTURAL STEEL AND VARIOUS OTHER SURFACES MAY CONTAIN LEAD PAINT. DEMOLITION OR RENOVATION OF SURFACES CONTAINING LEAD PAINT MUST BE DONE IN ACCORDANCE WITH 29 CFR 1926.62. CONTACT NASA COR WITH ANY QUESTIONS.
15. THIS BUILDING MAY CONTAIN ASBESTOS ABOVE CEILINGS. THIS MAY BE IN THE FORM OF PIPE INSULATION ON HOT WATER LINES AND STEAM LINES OR PIPE ELBOWS. USE PRECAUTIONS WHEN WORKING ABOVE CEILING, SO AS TO NOT DISTURB ASBESTOS. IF ASBESTOS IS FOUND, THE CONTRACTOR SHALL CONTACT NASA COR IMMEDIATELY.
16. ALL DUCT DETECTORS SHALL HAVE A REMOTE TEST STATION, WHICH SHALL BE INSTALLED IN AN ACCESSIBLE AREA.
17. ELECTRICAL CONTRACTOR SHALL NOTIFY THE COR FOR ANY EXISTING FIRE ALARM DEVICES (INCLUDING SMOKE AND DUCT DETECTORS) THAT ARE NOT IN WORKING ORDER.
18. NAC CIRCUITS SHALL BE DESIGNED TO AN 80% CAPACITY WITH THE MAXIMUM DEVICE CANDELA RETING UTILIZED IN THE CALCULATION.

ALABAMA REGISTERED No. 26967 PROFESSIONAL ENGINEER JOHN AVERRETT 9/4/15

WARNING

DO NOT SCALE THIS DRAWING

THIS DRAWING WAS DESIGNED TO BE PRINTED AT A NASA SHEET SIZE: MSFC STD. SIZE 40" X 28"

REV	BY	DATE	REVISION	C.I. NO.	APPROVED

Marshall Space Flight Center
Huntsville, Alabama 35812

BUILDING 4711
REVITALIZE ELECTRICAL SYSTEMS
FIRE ALARM PLAN - MISCELLANEOUS
ADD ALT. #1

AE FIRM: GOODWYN | MILLS | CAWOOD — MERRICK & COMPANY — JOINT VENTURE

NASA AE CONTRACT NO. NNM12AA49C NNM14AA72T

SUBMITTED: JENNIFER LANDRY
AE: DATE: 09/15/15
DESIGNED S. CRITTENDEN
DRAWN M. PATE
CHECKED J. AVERRETT
SCALE: AS SHOWN

APPROVAL RECOMMENDED: CODY GOODMAN, AS22 PROJECT A/E
APPROVAL RECOMMENDED: TIM DOSS, AS22 SUPPORT A/E
APPROVAL RECOMMENDED: PHIL HENDRIX, AS22 TEAM LEAD
SPEC. NO. FAC-MS063

APPROVED: NELSON OLINGER, AS22 GROUP LEAD DATE: 09/15/15

DRAWING NO. FAC-CU-4711-E303
SHEET 15 OF 38

FINAL SUBMITTAL
ISSUED FOR CONSTRUCTION
REF. NO. E303

Master Bid Disk 10-06-2015

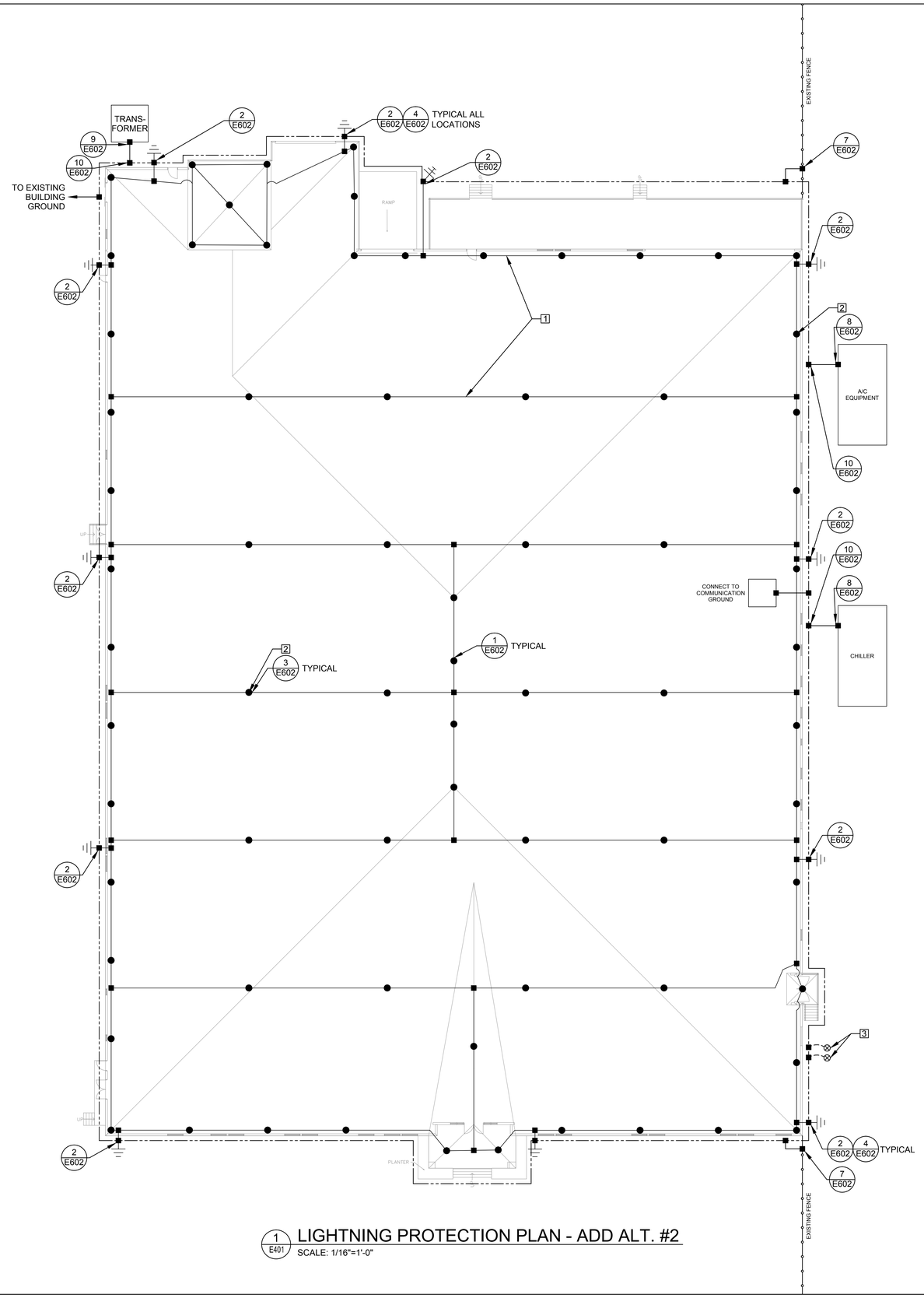

1 E401 LIGHTNING PROTECTION PLAN - ADD ALT. #2

SCALE: 1/16"=1'-0"

LEGEND

- NEW AIR TERMINAL
- NEW 4#0 STRANDED CU COUNTERPOISE
- NEW LIGHTNING PROTECTION CABLE
- MECHANICAL CONNECTION
- DOWN LEAD

PLAN NOTES

1. NEW LIGHTNING PROTECTION CABLE SHALL BE RUN WHERE INDICATED AND USE MECHANICAL CONNECTIONS AT ALL CONNECTION POINTS.
2. TIE IN AIR TERMINALS BY USING MECHANICAL CONNECTIONS.
3. EXISTING ISOLATED GROUNDING SYSTEM. CONNECT TO NEW COUNTERPOISE WITH MECHANICAL CONNECTIONS.

GENERAL NOTES

1. HEIGHT OF BUILDING IS APPROX. 25'-0".
2. THE TOWER ON THE NORTH SIDE OF THE BUILDING IS ESTIMATED TO BE 40'-0" ABOVE THE GRADE.
3. REFER TO SPECIFICATION 264113.
4. REFER TO SHEET FAC-CU-4711-E602 FOR DETAILS AND INFORMATION.
5. ELECTRICAL CONTRACTOR SHALL VERIFY THE LOCATION OF UNDERGROUND UTILITIES. PRIOR TO BEGINNING SOIL DISTURBANCE, CONTACT NASA AS22 TO OBTAIN A DIG PERMIT - OSCAR FORD @ (256) 544-6759 OR (256) 603-7884. ISSUANCE OF THE DIG PERMIT MAY TAKE UP TO TWO WEEKS.
6. CONNECT ALL METAL PIPING ENTRANCES TO NEW COUNTERPOISE.
7. DEPENDENT UPON THE ROOF CONDITIONS ENCOUNTERED, UTILIZE DETAILS ON SHEET FAC-CU-4711-E602.

0 8' 16' 32'

SCALE:1/16"=1'-0"

WARNING

DO NOT SCALE THIS DRAWING

THIS DRAWING WAS DESIGNED TO BE PRINTED AT A NASA SHEET SIZE: MSFC STD. SIZE 40" X 28"

ALABAMA REGISTERED No. 26967 PROFESSIONAL ENGINEER JOHN AVERRETT 9/4/15

REV	BY	DATE	REVISION	C.I. NO.	APPROVED

Marshall Space Flight Center
Huntsville, Alabama 35812

BUILDING 4711
REVITALIZE ELECTRICAL SYSTEMS
LIGHTNING PROTECTION PLAN
ADD ALT. #2

AE FIRM: GOODWYN MILLS CAWOOD / MERRICK & COMPANY — JOINT VENTURE

NASA AE CONTRACT NO. NNM12AA49C NNM14AA72T

SUBMITTED: JENNIFER LANDRY
AE: DATE: 09/15/15
DESIGNED S. CRITTENDEN
DRAWN M. PATE
CHECKED J. AVERRETT
SCALE: AS SHOWN

APPROVAL RECOMMENDED: CODY GOODMAN, AS22 PROJECT A/E
APPROVAL RECOMMENDED: TIM DOSS, AS22 SUPPORT A/E
APPROVAL RECOMMENDED: PHIL HENDRIX, AS22 TEAM LEAD
SPEC. NO. FAC-M5063

APPROVED: NELSON OLINGER, AS22 GROUP LEAD DATE: 09/15/15

DRAWING NO. FAC-CU-4711-E401
SHEET 16 OF 38

FINAL SUBMITTAL
ISSUED FOR CONSTRUCTION
REF. NO. E401

Master Bid Disk 10-06-2015

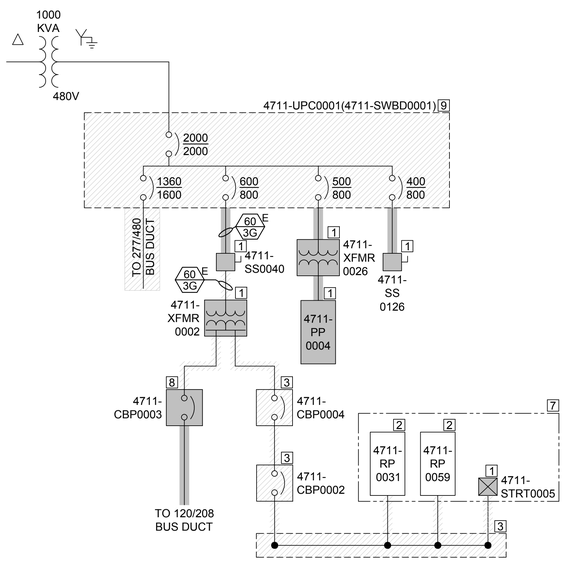

1 E501 ONE LINE DIAGRAM - MAIN DEMO
NO SCALE

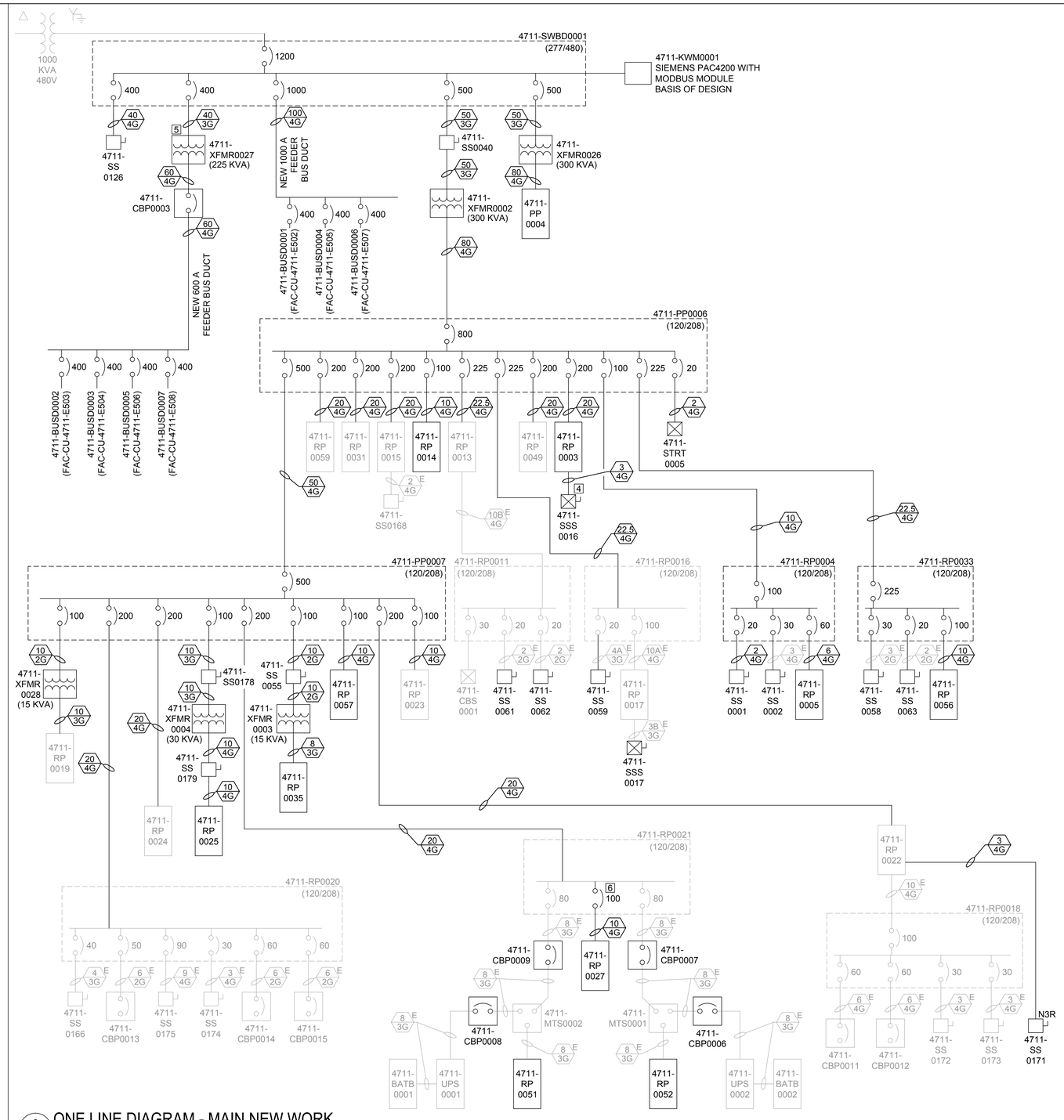

2 E501 ONE LINE DIAGRAM - MAIN NEW WORK
NO SCALE

PLAN NOTES

1. REPLACE EXISTING TRANSFORMER, PANEL, DISCONNECT, STARTER OR BUS DUCT PLUG WITH NEW TRANSFORMER, PANEL, DISCONNECT, STARTER OR BUS DUCT PLUG. SEE TRANSFORMER, PANEL, DISCONNECT, STARTER SCHEDULE WITH ASSOCIATED MAXIMO NUMBER.
2. EXISTING PANEL, DISCONNECT TO REMAIN.
3. REMOVE EXISTING SWITCHBOARD, DISCONNECT, STARTER, WIREWAY, TRANSFORMER OR BUS DUCT PLUG AND ALL ASSOCIATED CONDUIT AND CONDUCTORS.
4. NEW COMBINATION STARTER/DISCONNECT DEVICE. SEE SCHEDULE ON SHEET FAC-CU-4711-E708.
5. NEW TRANSFORMER (NOT AN EXISTING TO REPLACE TRANSFORMER). SEE TRANSFORMER SCHEDULE.
6. RE-FEED WITH 100A 3P.
7. ELECTRICAL EQUIPMENT TO BE FED FROM 4711-PP0006 IN NEW WORK.
8. REPLACE EXISTING CIRCUIT BREAKER PANEL WITH NEW CIRCUIT BREAKER PANEL. 4711-CBP0003 SHALL BE FED FROM 4711-XFMR0027 IN NEW WORK.
9. EXISTING SWITCHBOARD 4711-SWBD0001 AND CONCRETE PAD TO BE REMOVED, CONDUIT AND CONDUCTORS SHALL BE INTERCEPTED TO NEW INSTALLED SWITCHBOARD 4711-SWBD0001 LOCATION. SEE 2/FAC-CU-4711-E203 FOR LOCATION.

GENERAL NOTES

1. ALL BUS DUCT SHALL BE REPLACED UNLESS NOTED OTHERWISE. SEE PLAN NOTES THIS SHEET.
2. IN NEW WORK SECTION - GRAY (LIGHT PEN WEIGHT) INDICATES EQUIPMENT, CONDUIT OR CONDUCTORS ARE EXISTING TO REMAIN. BOLD (DARK PEN WEIGHT) INDICATES EQUIPMENT, CONDUIT OR CONDUCTORS ARE NEW.

WARNING
DO NOT SCALE THIS DRAWING
THIS DRAWING WAS DESIGNED TO BE PRINTED AT A NASA SHEET SIZE: MSFC STD. SIZE 40" X 28"

ALABAMA REGISTERED No. 26867 PROFESSIONAL ENGINEER JOHN AVERRETT 9/4/15

REV	BY	DATE	REVISION	C.I. NO.	APPROVED		

Marshall Space Flight Center
Huntsville, Alabama 35812

BUILDING 4711
REVITALIZE ELECTRICAL SYSTEMS

ONE LINE DIAGRAM - MAIN DEMO & NEW WORK

AE FIRM: GOODWYN | MILLS | CAWOOD MERRICK & COMPANY JOINT VENTURE

NASA AE CONTRACT NO. NNM12AA49C NNM14AA72T

SUBMITTED: JENNIFER LANDRY
AE: DATE: 09/15/15
DESIGNED S. CRITTENDEN
DRAWN M. PATE
CHECKED J. AVERRETT
SCALE: AS SHOWN

APPROVAL RECOMMENDED: CODY GOODMAN, AS22 PROJECT A/E
APPROVAL RECOMMENDED: TIM DOSS, AS22 SUPPORT A/E
APPROVAL RECOMMENDED: PHIL HENDRIX, AS22 TEAM LEAD
SPEC. NO. FAC-MS063

APPROVED: NELSON OLINGER
AS22 GROUP LEAD DATE: 09/15/15

DRAWING NO. FAC-CU-4711-E501
SHEET 17 OF 38

FINAL SUBMITTAL
ISSUED FOR CONSTRUCTION
REF. NO. E501

Master Bid Disk 10-06-2015

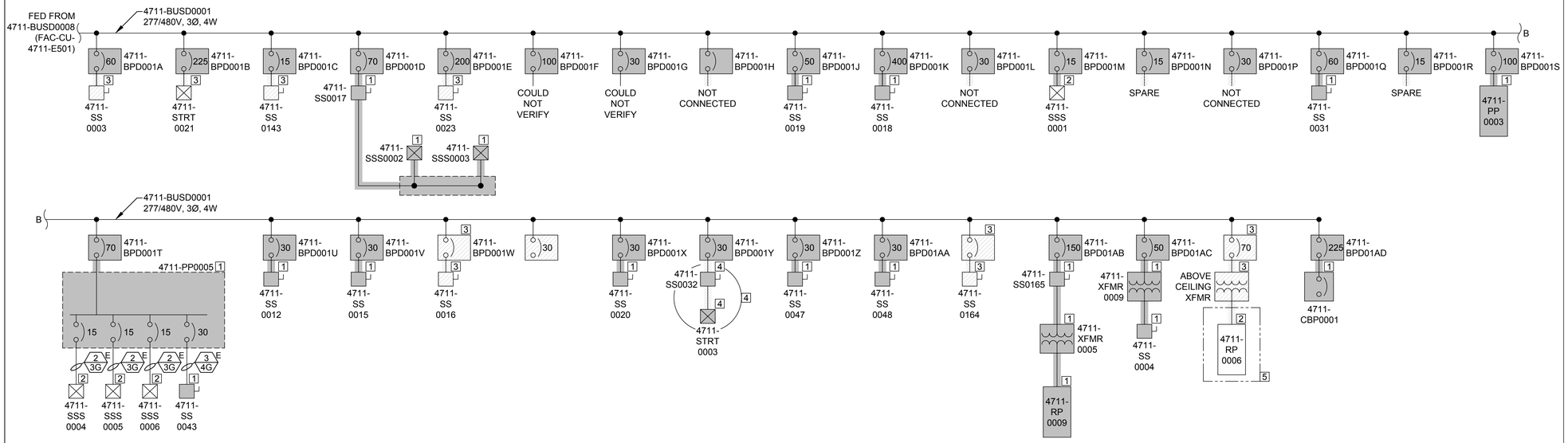

1 E502 ONE LINE DIAGRAM - 4711-BUSD0001 DEMO

NO SCALE

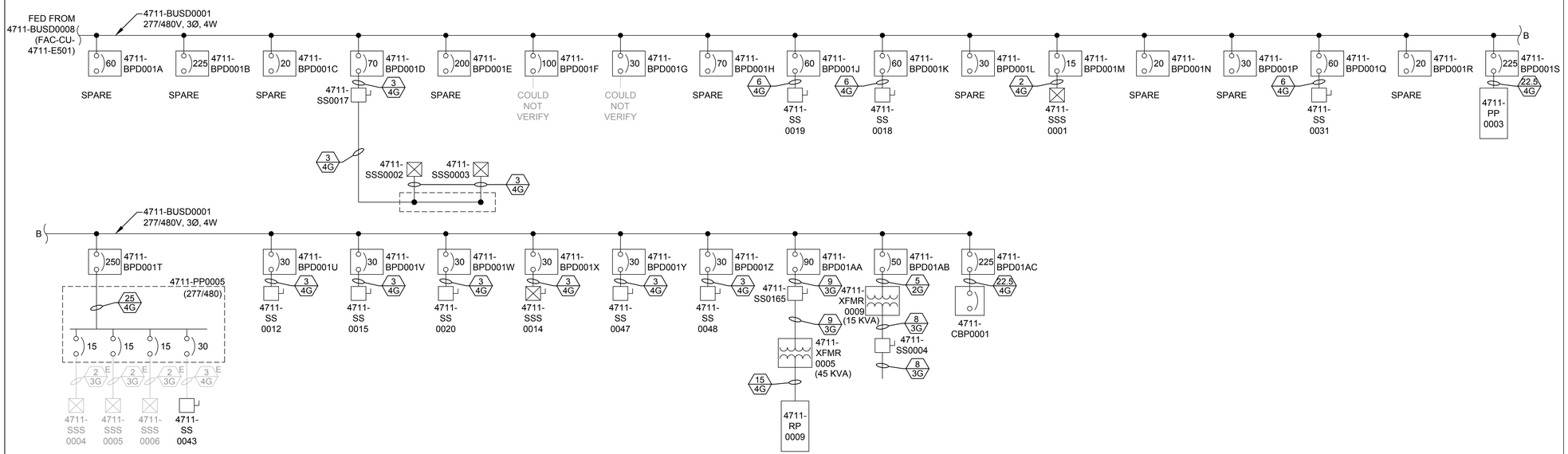

2 E502 ONE LINE DIAGRAM - 4711-BUSD0001 NEW WORK

NO SCALE

PLAN NOTES

1. REPLACE EXISTING TRANSFORMER, PANEL, DISCONNECT, STARTER OR BUS DUCT PLUG WITH NEW TRANSFORMER, PANEL, DISCONNECT, STARTER OR BUS DUCT PLUG. SEE TRANSFORMER, PANEL, DISCONNECT, STARTER SCHEDULE WITH ASSOCIATED MAXIMO NUMBER.
2. EXISTING PANEL, DISCONNECT OR STARTER TO REMAIN.
3. REMOVE EXISTING DISCONNECT, STARTER, WIREWAY, TRANSFORMER OR BUS DUCT PLUG AND ALL ASSOCIATED CONDUIT AND CONDUCTORS.
4. EXISTING STARTER AND DISCONNECT TO BE REMOVED AND REPLACED WITH A NEW COMBINATION STARTER/DISCONNECT. SEE SCHEDULE ON SHEET FAC-CU-4711-E708.
5. THE OUTLINED EQUIPMENT SHALL BE FED FROM BUSD0002, SEE SHEET FAC-CU-4711-E503.

GENERAL NOTES

1. ALL BUS DUCT SHALL BE REPLACED UNLESS NOTED OTHERWISE. SEE PLAN NOTES THIS SHEET.
2. IN NEW WORK SECTION - GRAY (LIGHT PEN WEIGHT) INDICATES EQUIPMENT, CONDUIT OR CONDUCTORS ARE EXISTING TO REMAIN. BOLD (DARK PEN WEIGHT) INDICATES EQUIPMENT, CONDUIT OR CONDUCTORS ARE NEW.

WARNING
DO NOT SCALE THIS DRAWING
THIS DRAWING WAS DESIGNED TO BE PRINTED AT A NASA SHEET SIZE: MSFC STD. SIZE 40" X 28"

ALABAMA REGISTERED No. 26967 PROFESSIONAL ENGINEER JOHN AVERRETT 9/4/15

REV	BY	DATE	REVISION	C.I. NO.	APPROVED

Marshall Space Flight Center
Huntsville, Alabama 35812

BUILDING 4711
REVITALIZE ELECTRICAL SYSTEMS
ONE LINE DIAGRAM - 4711-BUSD0001
DEMO & NEW WORK

AE FIRM: GOODWYN | MILLS | CAWOOD — MERRICK & COMPANY — JOINT VENTURE

NASA AE CONTRACT NO. NNM12AA49C NNM14AA72T

SUBMITTED: JENNIFER LANDRY
AE: DATE: 09/15/15
DESIGNED S. CRITTENDEN
DRAWN M. PATE
CHECKED J. AVERRETT
SCALE: AS SHOWN

APPROVAL RECOMMENDED: CODY GOODMAN, AS22 PROJECT A/E
APPROVAL RECOMMENDED: TIM DOSS, AS22 SUPPORT A/E
APPROVAL RECOMMENDED: PHIL HENDRIX, AS22 TEAM LEAD
SPEC. NO. FAC-M5063

APPROVED: NELSON OLINGER, AS22 GROUP LEAD DATE: 09/15/15

DRAWING NO. FAC-CU-4711-E502
SHEET 18 OF 38

FINAL SUBMITTAL
ISSUED FOR CONSTRUCTION
REF. NO. E502

Master Bid Disk 10-06-2015

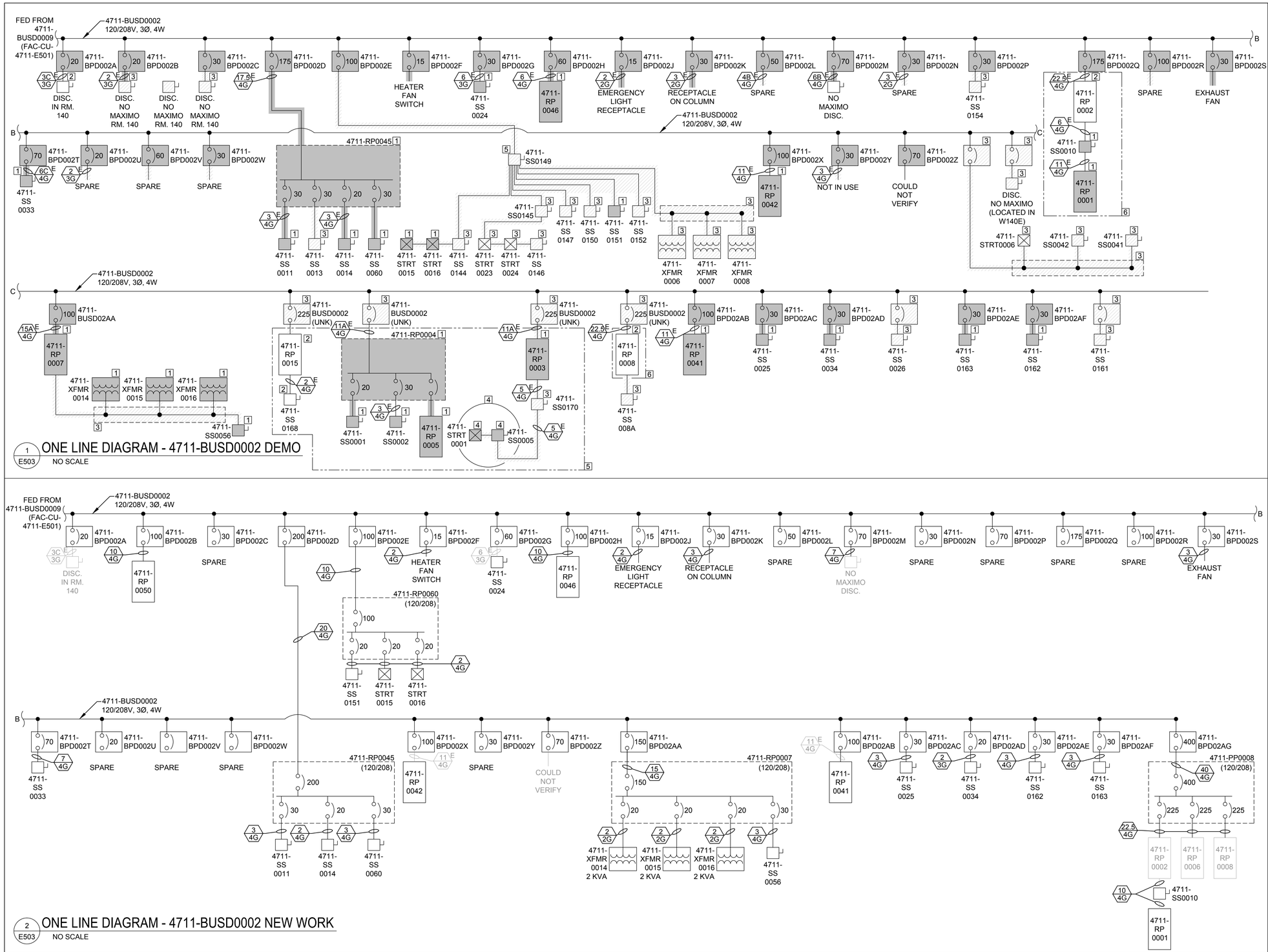

1 E503 ONE LINE DIAGRAM - 4711-BUSD0002 DEMO

NO SCALE

2 E503 ONE LINE DIAGRAM - 4711-BUSD0002 NEW WORK

NO SCALE

PLAN NOTES

1. REPLACE EXISTING TRANSFORMER, PANEL, DISCONNECT, STARTER OR BUS DUCT PLUG WITH NEW TRANSFORMER, PANEL, DISCONNECT, STARTER OR BUS DUCT PLUG. SEE TRANSFORMER, PANEL, DISCONNECT, STARTER SCHEDULE WITH ASSOCIATED MAXIMO NUMBER.
2. EXISTING PANEL, DISCONNECT TO REMAIN.
3. REMOVE EXISTING DISCONNECT, STARTER, WIREWAY, TRANSFORMER OR BUS DUCT PLUG AND ALL ASSOCIATED CONDUIT AND CONDUCTORS.
4. EXISTING STARTER AND DISCONNECT TO BE REMOVED AND REPLACED WITH A COMBINATION STARTER/DISCONNECT. SEE SCHEDULE ON SHEET FAC-CU-4711-E708.
5. THE OUTLINED EQUIPMENT SHALL BE FED FROM MAIN SERVICE, SEE SHEET FAC-CU-4711-E501.
6. ELECTRICAL EQUIPMENT TO BE FED FROM PANEL 4711-PP0008.

GENERAL NOTES

1. ALL BUS DUCT SHALL BE REPLACED UNLESS NOTED OTHERWISE. SEE PLAN NOTES THIS SHEET.
2. IN NEW WORK SECTION - GRAY (LIGHT PEN WEIGHT) INDICATES EQUIPMENT, CONDUIT OR CONDUCTORS ARE EXISTING TO REMAIN. BOLD (DARK PEN WEIGHT) INDICATES EQUIPMENT, CONDUIT OR CONDUCTORS ARE NEW.

WARNING

DO NOT SCALE THIS DRAWING

THIS DRAWING WAS DESIGNED TO BE PRINTED AT A NASA SHEET SIZE: MSFC STD. SIZE 40" X 28"

LAMAR J. AVERRETT REGISTERED No. 26967 PROFESSIONAL ENGINEER 9/4/15

REV	BY	DATE	REVISION	C.I. NO.	APPROVED

Marshall Space Flight Center
Huntsville, Alabama 35812

BUILDING 4711
REVITALIZE ELECTRICAL SYSTEMS
ONE LINE DIAGRAM - 4711-BUSD0002
DEMO & NEW WORK

AE FIRM: GOODWYN | MILLS | CAWOOD — MERRICK & COMPANY — JOINT VENTURE

NASA AE CONTRACT NO. NNM12AA49C NNM14AA72T

SUBMITTED: JENNIFER LANDRY
AE: DATE: 09/15/15
DESIGNED S. CRITTENDEN
DRAWN M. PATE
CHECKED J. AVERRETT
SCALE: AS SHOWN

APPROVAL RECOMMENDED: CODY GOODMAN, AS22 PROJECT A/E
APPROVAL RECOMMENDED: TIM DOSS, AS22 SUPPORT A/E
APPROVAL RECOMMENDED: PHIL HENDRIX, AS22 TEAM LEAD
SPEC. NO. FAC-M5063

APPROVED: NELSON OLINGER, AS22 GROUP LEAD DATE: 09/15/15

DRAWING NO. FAC-CU-4711-E503
SHEET 19 OF 38

FINAL SUBMITTAL
ISSUED FOR CONSTRUCTION
REF. NO. E503

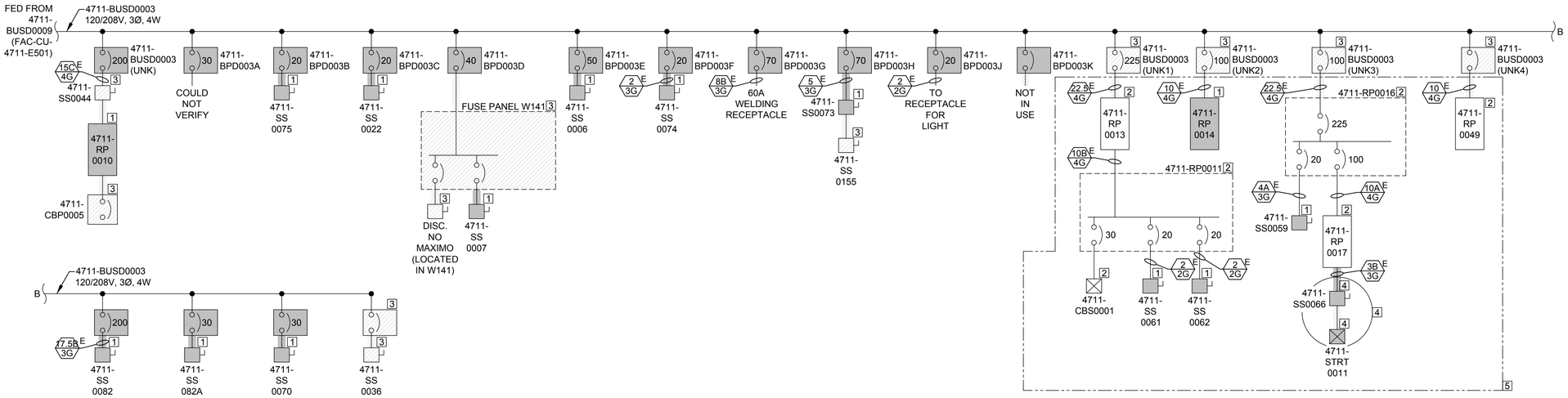

1 E504 ONE LINE DIAGRAM - 4711-BUSD0003 DEMO

NO SCALE

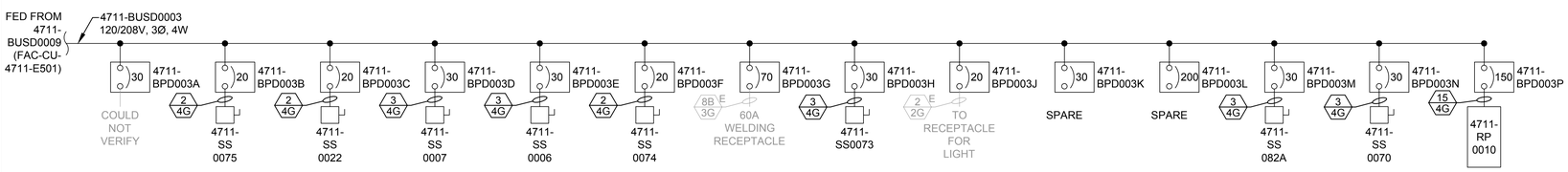

2 E504 ONE LINE DIAGRAM - 4711-BUSD0003 NEW WORK

NO SCALE

PLAN NOTES

1. REPLACE EXISTING TRANSFORMER, PANEL, DISCONNECT, STARTER OR BUS DUCT PLUG WITH NEW TRANSFORMER, PANEL, DISCONNECT, STARTER OR BUS DUCT PLUG. SEE TRANSFORMER, PANEL, DISCONNECT, STARTER SCHEDULE WITH ASSOCIATED MAXIMO NUMBER.
2. EXISTING PANEL, DISCONNECT TO REMAIN.
3. REMOVE EXISTING DISCONNECT, STARTER, WIREWAY, TRANSFORMER OR BUS DUCT PLUG AND ALL ASSOCIATED CONDUIT AND CONDUCTORS.
4. EXISTING STARTER AND DISCONNECT TO BE REMOVED AND REPLACED WITH A NEW COMBINATION STARTER/DISCONNECT DEVICE. SEE SCHEDULE ON SHEET FAC-CU-4711-E708.
5. THE OUTLINED EQUIPMENT SHALL BE FED FROM MAIN SERVICE, SEE SHEET FAC-CU-4711-E501.

GENERAL NOTES

1. ALL BUS DUCT SHALL BE REPLACED UNLESS NOTED OTHERWISE. SEE PLAN NOTES THIS SHEET.
2. IN NEW WORK SECTION - GRAY (LIGHT PEN WEIGHT) INDICATES EQUIPMENT, CONDUIT OR CONDUCTORS ARE EXISTING TO REMAIN. BOLD (DARK PEN WEIGHT) INDICATES EQUIPMENT, CONDUIT OR CONDUCTORS ARE NEW.

WARNING
DO NOT SCALE THIS DRAWING
THIS DRAWING WAS DESIGNED TO BE PRINTED AT A NASA SHEET SIZE: MSFC STD. SIZE 40" X 28"

ALABAMA REGISTERED No. 26967 PROFESSIONAL ENGINEER JOHN AVERRETT 9/4/15

REV	BY	DATE	REVISION	C.I. NO.	APPROVED

Marshall Space Flight Center
Huntsville, Alabama 35812

BUILDING 4711
REVITALIZE ELECTRICAL SYSTEMS
ONE LINE DIAGRAM - 4711-BUSD0003
DEMO & NEW WORK

AE FIRM: GOODWYN | MILLS | CAWOOD — MERRICK & COMPANY — JOINT VENTURE

NASA AE CONTRACT NO. NNM12AA49C NNM14AA72T

SUBMITTED: JENNIFER LANDRY
AE: DATE: 09/15/15
DESIGNED S. CRITTENDEN
DRAWN M. PATE
CHECKED J. AVERRETT
SCALE: AS SHOWN

APPROVAL RECOMMENDED: CODY GOODMAN, AS22 PROJECT A/E
APPROVAL RECOMMENDED: TIM DOSS, AS22 SUPPORT A/E
APPROVAL RECOMMENDED: PHIL HENDRIX, AS22 TEAM LEAD
SPEC. NO. FAC-MS063

APPROVED: NELSON OLINGER, AS22 GROUP LEAD DATE: 09/15/15

DRAWING NO. FAC-CU-4711-E504
SHEET 20 OF 38

FINAL SUBMITTAL
ISSUED FOR CONSTRUCTION
REF. NO. E504

Master Bid Disk 10-06-2015

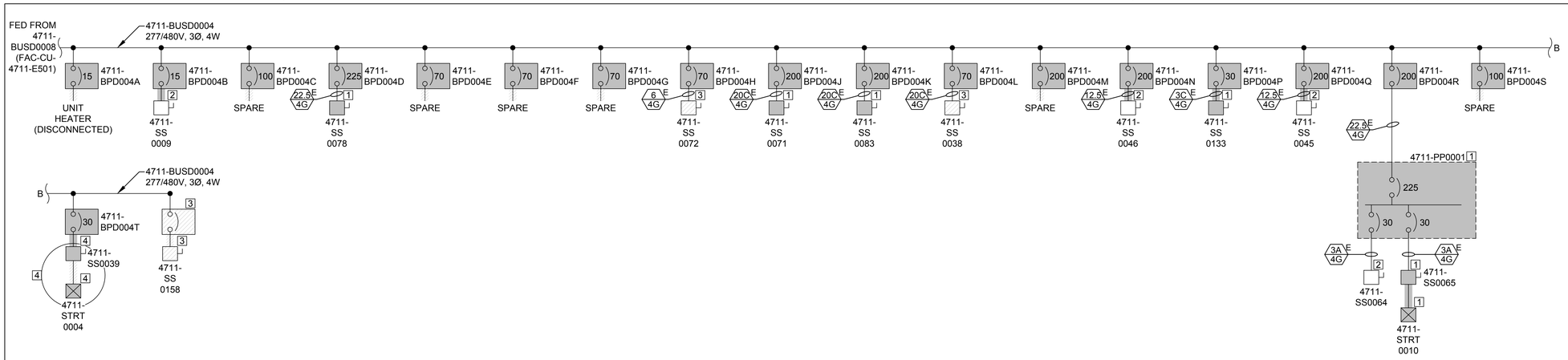

1 E505 ONE LINE DIAGRAM - 4711-BUSD0004 DEMO

NO SCALE

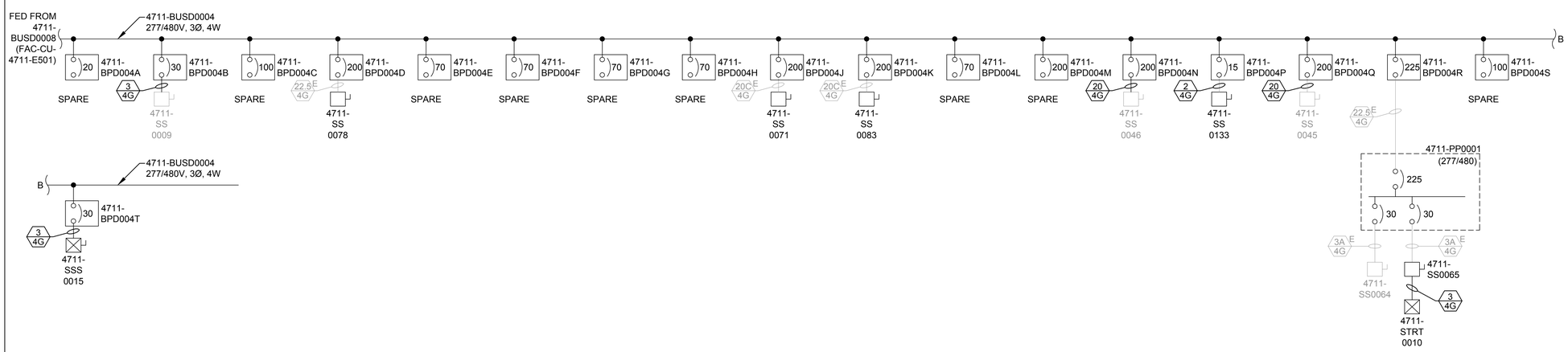

2 E505 ONE LINE DIAGRAM - 4711-BUSD0004 NEW WORK

NO SCALE

PLAN NOTES

1. REPLACE EXISTING TRANSFORMER, PANEL, DISCONNECT, STARTER OR BUS DUCT PLUG WITH NEW TRANSFORMER, PANEL, DISCONNECT, STARTER OR BUS DUCT PLUG. SEE TRANSFORMER, PANEL, DISCONNECT, STARTER SCHEDULE WITH ASSOCIATED MAXIMO NUMBER.
2. EXISTING DISCONNECT TO REMAIN.
3. REMOVE EXISTING DISCONNECT, STARTER, WIREWAY, TRANSFORMER OR BUS DUCT PLUG AND ALL ASSOCIATED CONDUIT AND CONDUCTORS.
4. EXISTING STARTER AND DISCONNECT TO BE REMOVED AND REPLACED WITH A NEW COMBINATION STARTER/DISCONNECT DEVICE. SEE SCHEDULE ON SHEET FAC-CU-4711-E708.

GENERAL NOTES

1. ALL BUS DUCT SHALL BE REPLACED UNLESS NOTED OTHERWISE. SEE PLAN NOTES THIS SHEET.
2. IN NEW WORK SECTION - GRAY (LIGHT PEN WEIGHT) INDICATES EQUIPMENT, CONDUIT OR CONDUCTORS ARE EXISTING TO REMAIN. BOLD (DARK PEN WEIGHT) INDICATES EQUIPMENT, CONDUIT OR CONDUCTORS ARE NEW.

WARNING
DO NOT SCALE THIS DRAWING
THIS DRAWING WAS DESIGNED TO BE PRINTED AT A NASA SHEET SIZE: MSFC STD. SIZE 40" X 28"

ALABAMA REGISTERED No. 26967 PROFESSIONAL ENGINEER 9/14/15 JOHN AVERRETT

REV	BY	DATE	REVISION	C.I. NO.	APPROVED

Marshall Space Flight Center
Huntsville, Alabama 35812

BUILDING 4711
REVITALIZE ELECTRICAL SYSTEMS
ONE LINE DIAGRAM - 4711-BUSD0004
DEMO & NEW WORK

AE FIRM: GOODWYN MILLS CAWOOD / MERRICK & COMPANY — JOINT VENTURE

NASA AE CONTRACT NO. NNM12AA49C NNM14AA72T

SUBMITTED: JENNIFER LANDRY
AE: DATE: 09/15/15
DESIGNED S. CRITTENDEN
DRAWN M. PATE
CHECKED J. AVERRETT
SCALE: AS SHOWN

APPROVAL RECOMMENDED: CODY GOODMAN, AS22 PROJECT A/E
APPROVAL RECOMMENDED: TIM DOSS, AS22 SUPPORT A/E
APPROVAL RECOMMENDED: PHIL HENDRIX, AS22 TEAM LEAD
SPEC. NO. FAC-M5063

APPROVED: NELSON OLINGER, AS22 GROUP LEAD DATE: 09/15/15

DRAWING NO. FAC-CU-4711-E505
SHEET 21 OF 38

FINAL SUBMITTAL
ISSUED FOR CONSTRUCTION
REF. NO. E505

Master Bid Disk 10-06-2015

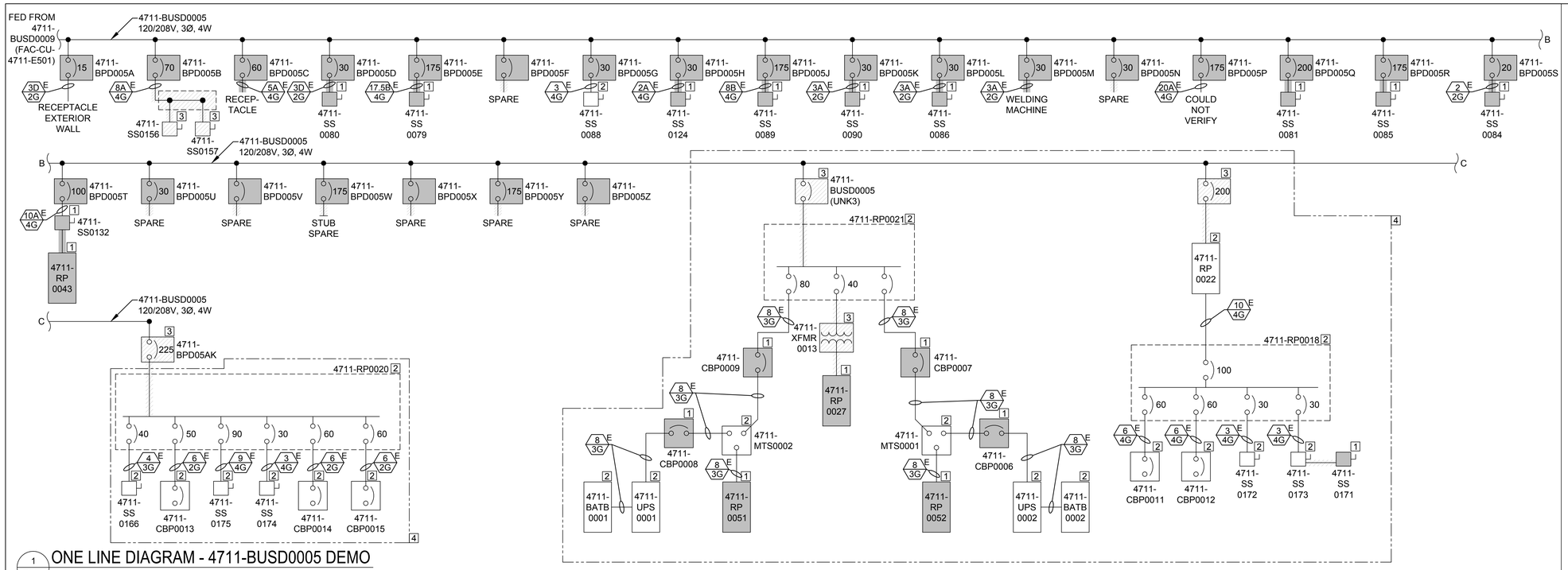

1 E506 ONE LINE DIAGRAM - 4711-BUSD0005 DEMO

NO SCALE

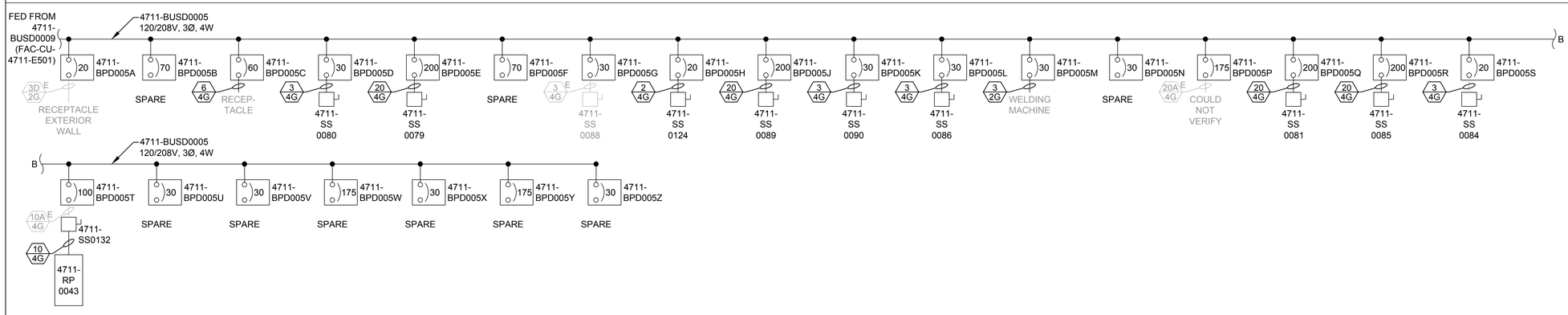

2 E506 ONE LINE DIAGRAM - 4711-BUSD0005 NEW WORK

NO SCALE

PLAN NOTES

1. REPLACE EXISTING TRANSFORMER, PANEL, DISCONNECT, STARTER OR BUS DUCT PLUG WITH NEW TRANSFORMER, PANEL, DISCONNECT, STARTER OR BUS DUCT PLUG. SEE TRANSFORMER, PANEL, DISCONNECT, STARTER SCHEDULE WITH ASSOCIATED MAXIMO NUMBER.
2. EXISTING PANEL, DISCONNECT TO REMAIN.
3. REMOVE EXISTING DISCONNECT, STARTER, WIREWAY, TRANSFORMER OR BUS DUCT PLUG AND ALL ASSOCIATED CONDUIT AND CONDUCTORS.
4. THE OUTLINED EQUIPMENT SHALL BE FED FROM MAIN SERVICE, SEE SHEET FAC-CU-4711-E501.

GENERAL NOTES

1. ALL BUS DUCT SHALL BE REPLACED UNLESS NOTED OTHERWISE. SEE PLAN NOTES THIS SHEET.
2. IN NEW WORK SECTION - GRAY (LIGHT PEN WEIGHT) INDICATES EQUIPMENT, CONDUIT OR CONDUCTORS ARE EXISTING TO REMAIN. BOLD (DARK PEN WEIGHT) INDICATES EQUIPMENT, CONDUIT OR CONDUCTORS ARE NEW.

WARNING
DO NOT SCALE THIS DRAWING
THIS DRAWING WAS DESIGNED TO BE PRINTED AT A NASA SHEET SIZE: MSFC STD. SIZE 40" X 28"

ALABAMA REGISTERED No. 26967 PROFESSIONAL ENGINEER 9/4/15 JOHN AVERRETT

REV	BY	DATE	REVISION	C.I. NO.	APPROVED

Marshall Space Flight Center
Huntsville, Alabama 35812

BUILDING 4711
REVITALIZE ELECTRICAL SYSTEMS
ONE LINE DIAGRAM - 4711-BUSD0005
DEMO & NEW WORK

AE FIRM: GOODWYN MILLS CAWOOD / MERRICK & COMPANY — JOINT VENTURE

NASA AE CONTRACT NO. NNM12AA49C NNM14AA72T

SUBMITTED: JENNIFER LANDRY
AE: DATE: 09/15/15
DESIGNED S. CRITTENDEN
DRAWN M. PATE
CHECKED J. AVERRETT
SCALE: AS SHOWN

APPROVAL RECOMMENDED: CODY GOODMAN, AS22 PROJECT A/E
APPROVAL RECOMMENDED: TIM DOSS, AS22 SUPPORT A/E
APPROVAL RECOMMENDED: PHIL HENDRIX, AS22 TEAM LEAD
SPEC. NO. FAC-M5063

APPROVED: NELSON OLINGER, AS22 GROUP LEAD DATE: 09/15/15

DRAWING NO. FAC-CU-4711-E506
SHEET 22 OF 38

FINAL SUBMITTAL
ISSUED FOR CONSTRUCTION
REF. NO. E506

Master Bid Disk 10-06-2015

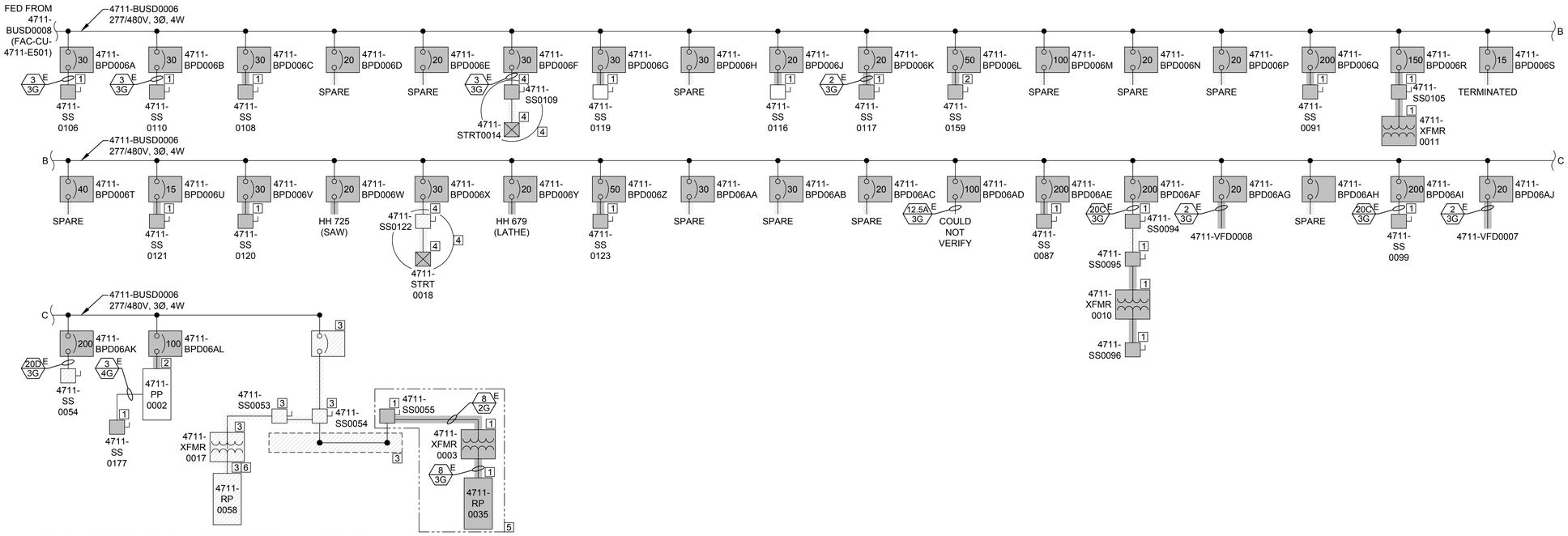

1 E507 ONE LINE DIAGRAM - 4711-BUSD0006 DEMO

NO SCALE

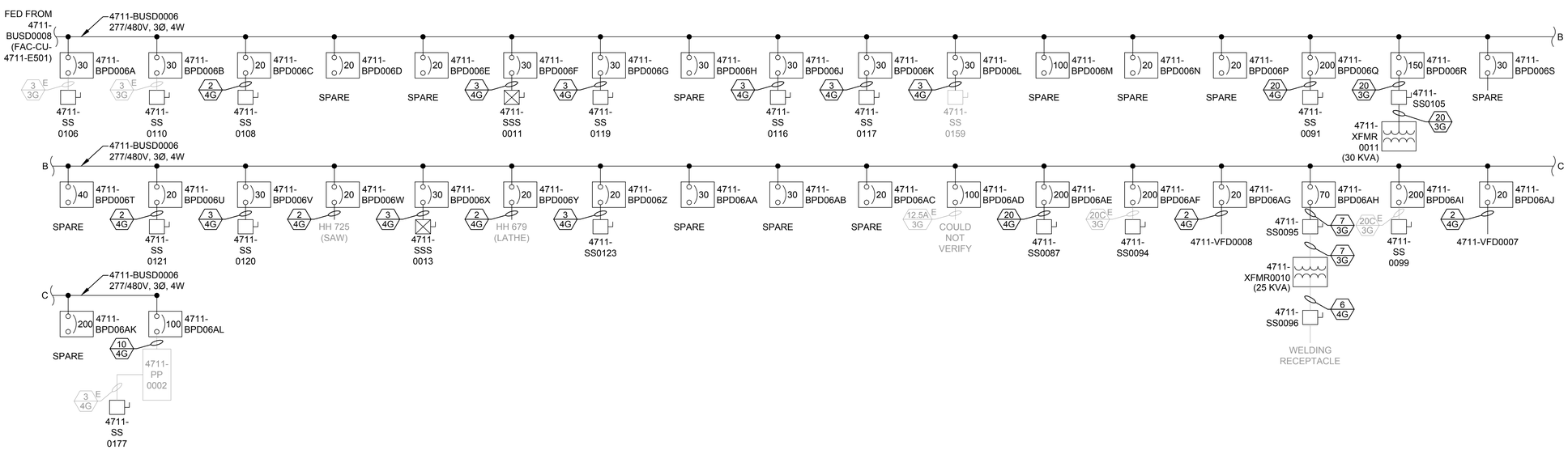

2 E507 ONE LINE DIAGRAM - 4711-BUSD0006 NEW WORK

NO SCALE

PLAN NOTES

1. REPLACE EXISTING TRANSFORMER, PANEL, DISCONNECT, STARTER OR BUS DUCT PLUG WITH NEW TRANSFORMER, PANEL, DISCONNECT, STARTER OR BUS DUCT PLUG. SEE TRANSFORMER, PANEL, DISCONNECT, STARTER SCHEDULE WITH ASSOCIATED MAXIMO NUMBER.
2. EXISTING PANEL, DISCONNECT TO REMAIN.
3. REMOVE EXISTING DISCONNECT, STARTER, WIREWAY, TRANSFORMER OR BUS DUCT PLUG AND ALL ASSOCIATED CONDUIT AND CONDUCTORS.
4. EXISTING STARTER AND DISCONNECT TO BE REMOVED AND REPLACED WITH A COMBINATION STARTER/DISCONNECT DEVICE. SEE SCHEDULE ON SHEET FAC-CU-4711-E708.
5. THE OUTLINED EQUIPMENT SHALL BE FED FROM MAIN SERVICE, SEE SHEET FAC-CU-4711-E501.
6. FEED LOADS FROM PANEL 4711-RP0057.

GENERAL NOTES

1. ALL BUS DUCT SHALL BE REPLACED UNLESS NOTED OTHERWISE. SEE PLAN NOTES THIS SHEET.
2. IN NEW WORK SECTION - GRAY (LIGHT PEN WEIGHT) INDICATES EQUIPMENT, CONDUIT OR CONDUCTORS ARE EXISTING TO REMAIN. BOLD (DARK PEN WEIGHT) INDICATES EQUIPMENT, CONDUIT OR CONDUCTORS ARE NEW.

WARNING
DO NOT SCALE THIS DRAWING
THIS DRAWING WAS DESIGNED TO BE PRINTED AT A NASA SHEET SIZE: MSFC STD. SIZE 40" X 28"

ALABAMA REGISTERED No. 26987 PROFESSIONAL ENGINEER 9/4/15 JOHN AVERRETT

REV	BY	DATE	REVISION	C.I. NO.	APPROVED		

Marshall Space Flight Center
Huntsville, Alabama 35812

BUILDING 4711
REVITALIZE ELECTRICAL SYSTEMS
ONE LINE DIAGRAM - 4711-BUSD0006
DEMO & NEW WORK

AE FIRM: GOODWYN | MILLS | CAWOOD — MERRICK & COMPANY — JOINT VENTURE

NASA AE CONTRACT NO. NNM12AA49C NNM14AA72T

SUBMITTED: JENNIFER LANDRY
AE: DATE: 09/15/15
DESIGNED: S. CRITTENDEN
DRAWN: M. PATE
CHECKED: J. AVERRETT
SCALE: AS SHOWN

APPROVAL RECOMMENDED: CODY GOODMAN, AS22 PROJECT A/E
APPROVAL RECOMMENDED: TIM DOSS, AS22 SUPPORT A/E
APPROVAL RECOMMENDED: PHIL HENDRIX, AS22 TEAM LEAD
SPEC. NO. FAC-M5063

APPROVED: NELSON OLINGER, AS22 GROUP LEAD DATE: 09/15/15

DRAWING NO. FAC-CU-4711-E507
SHEET 23 OF 38

FINAL SUBMITTAL
ISSUED FOR CONSTRUCTION
REF. NO. E507

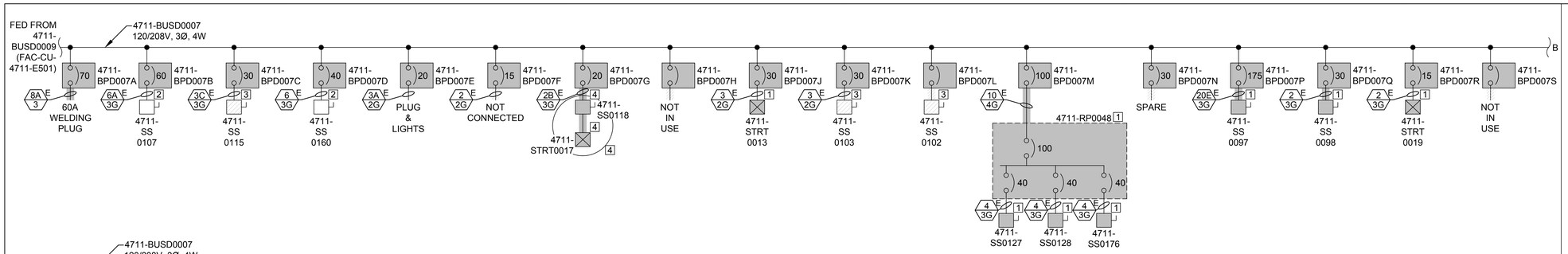

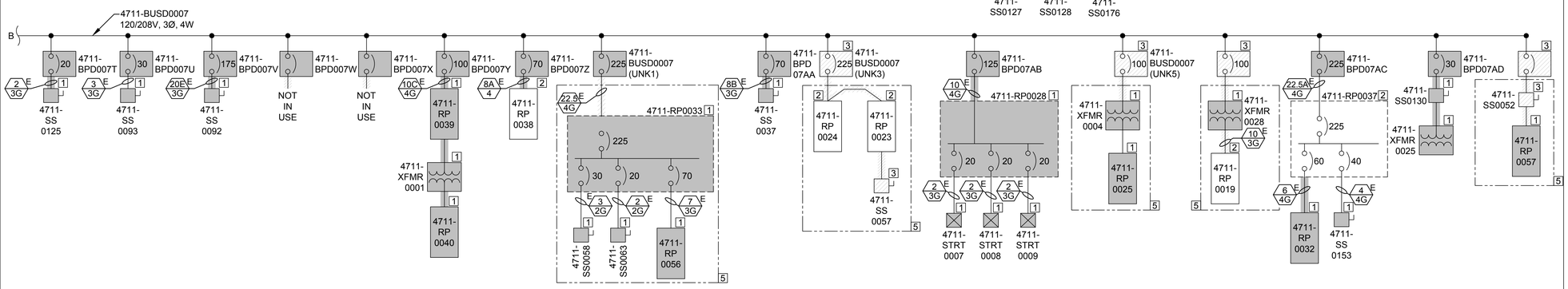

1 E508 ONE LINE DIAGRAM - 4711-BUSD0007 DEMO

NO SCALE

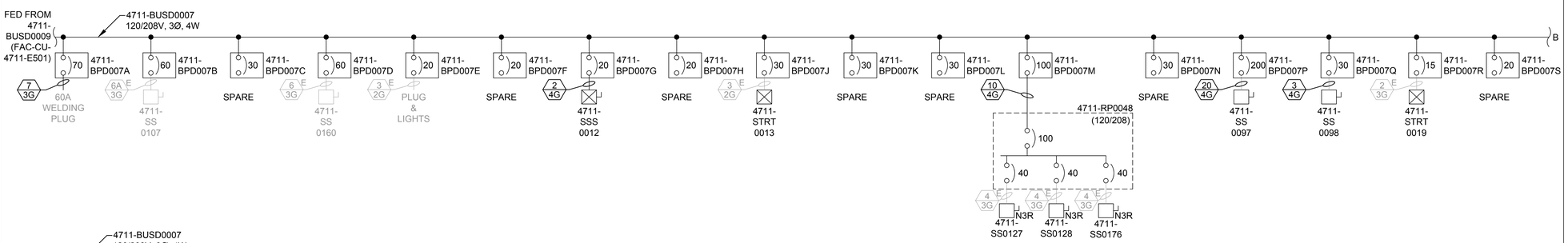

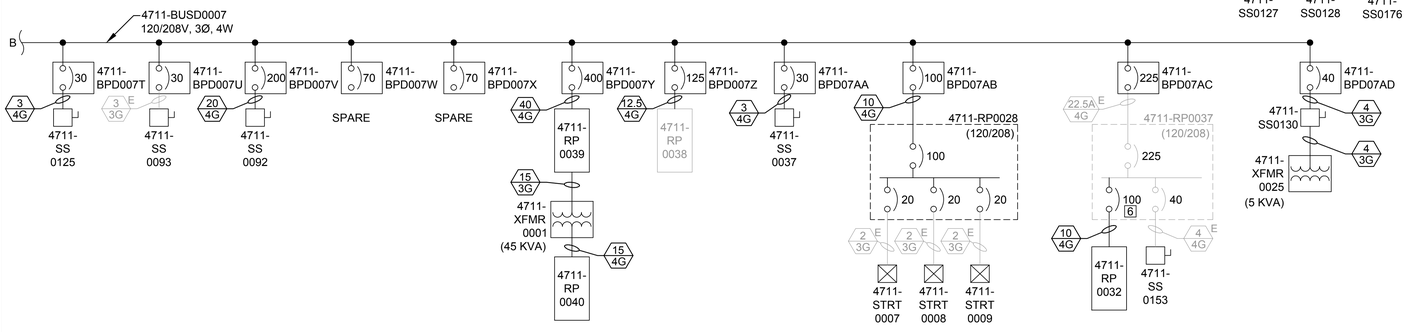

2 E508 ONE LINE DIAGRAM - 4711-BUSD0007 NEW WORK

NO SCALE

PLAN NOTES

1. REPLACE EXISTING TRANSFORMER, PANEL, DISCONNECT, STARTER OR BUS DUCT PLUG WITH NEW TRANSFORMER, PANEL, DISCONNECT, STARTER OR BUS DUCT PLUG. SEE TRANSFORMER, PANEL, DISCONNECT, STARTER SCHEDULE WITH ASSOCIATED MAXIMO NUMBER.
2. EXISTING PANEL, DISCONNECT TO REMAIN.
3. REMOVE EXISTING DISCONNECT, STARTER, WIREWAY, TRANSFORMER OR BUS DUCT PLUG AND ALL ASSOCIATED CONDUIT AND CONDUCTORS.
4. EXISTING STARTER AND DISCONNECT TO BE REMOVED AND REPLACED WITH A COMBINATION STARTER/DISCONNECT DEVICE. SEE SCHEDULE ON SHEET FAC-CU-4711-E708.
5. THE OUTLINED EQUIPMENT SHALL BE FED FROM MAIN SERVICE, SEE SHEET FAC-CU-4711-E501.
6. UPDATED CIRCUIT BREAKER AS NOTED.

GENERAL NOTES

1. ALL BUS DUCT SHALL BE REPLACED UNLESS NOTED OTHERWISE. SEE PLAN NOTES THIS SHEET.
2. IN NEW WORK SECTION - GRAY (LIGHT PEN WEIGHT) INDICATES EQUIPMENT, CONDUIT OR CONDUCTORS ARE EXISTING TO REMAIN. BOLD (DARK PEN WEIGHT) INDICATES EQUIPMENT, CONDUIT OR CONDUCTORS ARE NEW.

WARNING
DO NOT SCALE THIS DRAWING
THIS DRAWING WAS DESIGNED TO BE PRINTED AT A NASA SHEET SIZE: MSFC STD. SIZE 40" X 28"

ALABAMA REGISTERED No. 26967 PROFESSIONAL ENGINEER JOHN AVERRETT 9/4/15

REV	BY	DATE	REVISION	C.I. NO.	APPROVED

Marshall Space Flight Center
Huntsville, Alabama 35812

BUILDING 4711
REVITALIZE ELECTRICAL SYSTEMS
ONE LINE DIAGRAM - 4711-BUSD0007
DEMO & NEW WORK

AE FIRM: GOODWYN | MILLS | CAWOOD — MERRICK & COMPANY — JOINT VENTURE

NASA AE CONTRACT NO. NNM12AA49C NNM14AA72T

SUBMITTED: JENNIFER LANDRY
AE: DATE: 09/15/15
DESIGNED S. CRITTENDEN
DRAWN M. PATE
CHECKED J. AVERRETT
SCALE: AS SHOWN

APPROVAL RECOMMENDED: CODY GOODMAN, AS22 PROJECT A/E
APPROVAL RECOMMENDED: TIM DOSS, AS22 SUPPORT A/E
APPROVAL RECOMMENDED: PHIL HENDRIX, AS22 TEAM LEAD
SPEC. NO. FAC-M5063

APPROVED: NELSON OLINGER, AS22 GROUP LEAD DATE: 09/15/15

DRAWING NO. FAC-CU-4711-E508
SHEET 24 OF 38

FINAL SUBMITTAL
ISSUED FOR CONSTRUCTION
REF. NO. E508

A | B | C | D | E | F | G

GENERAL NOTES

1. SHUNT SIGNAGE TO BE LOCATED AT ALL SWITCHGEAR SERVICE ENTRANCES AND SHUNT TRIP. PROVIDE LAMINATED SIGNAGE AT EACH LOCATION.

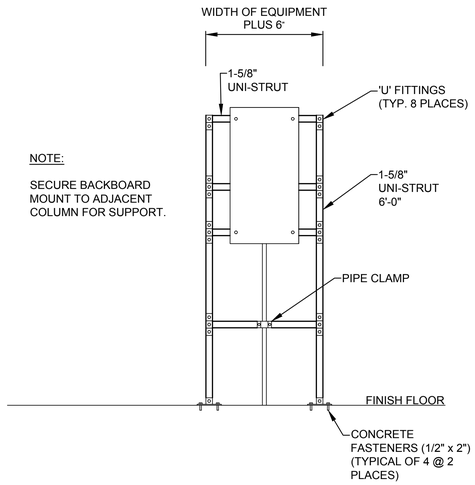

NOTE:

SECURE BACKBOARD MOUNT TO ADJACENT COLUMN FOR SUPPORT.

1 BACKBOARD DETAIL
E201 E601 NO SCALE

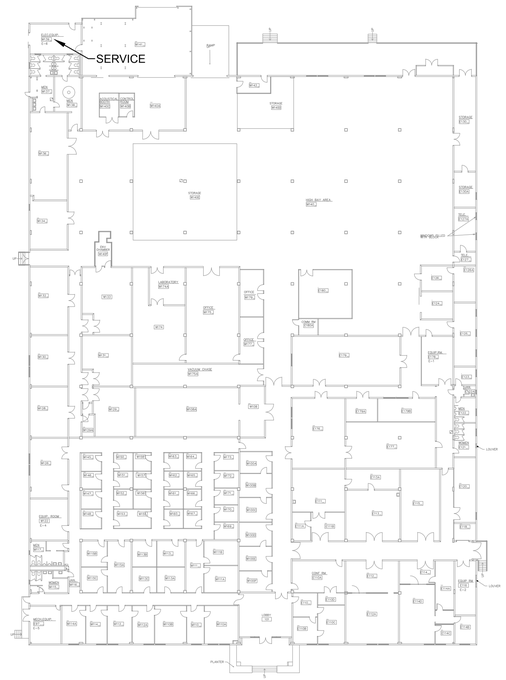

0 16' 32' 64'
SCALE:1/32"=1'-0"

BUILDING 4711
EMERGENCY POWER
SHUT DOWN

4 BUILDING 4711 EMERGENCY POWER SHUT DOWN
E601 E601 TO BE MOUNTED IN FOYER NEXT TO 4711-FAS0001

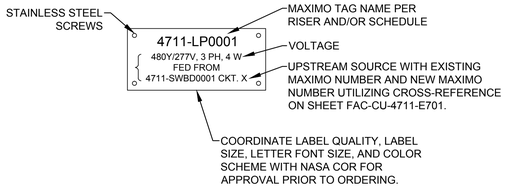

2 DETAIL - TYPICAL ENGRAVED EQUIPMENT LABEL
E601 E601 NO SCALE

FOR ALL PANELS, DISCONNECTS AND SWITCHBOARDS

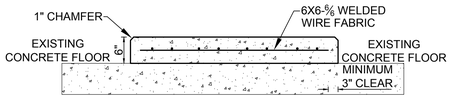

3 TYPICAL TRANSFORMER PAD DETAIL
E601 E601 NO SCALE

NOTE: SCARIFY EXISTING CONCRETE AND DRILL #4 DOWELS ON 2' CENTERS WITH EPOXY, TO TIE INTO NEW PAD.

WARNING
DO NOT SCALE THIS DRAWING
THIS DRAWING WAS DESIGNED TO BE PRINTED AT A NASA SHEET SIZE: MSFC STD. SIZE 40" X 28"

ALABAMA REGISTERED No. 28867 PROFESSIONAL ENGINEER JOHN AVERRETT 9/4/15

REV	BY	DATE	REVISION	C.I. NO.	APPROVED

Marshall Space Flight Center
Huntsville, Alabama 35812

BUILDING 4711
REVITALIZE ELECTRICAL SYSTEMS

ELECTRICAL DETAILS

AE FIRM: GOODWYN | MILLS | CAWOOD MERRICK & COMPANY JOINT VENTURE

NASA AE CONTRACT NO. NNM12AA49C NNM14AA72T

SUBMITTED: JENNIFER LANDRY
AE: DATE: 09/15/15
DESIGNED S. CRITTENDEN
DRAWN M. PATE
CHECKED J. AVERRETT
SCALE: NO SCALE

APPROVAL RECOMMENDED: CODY GOODMAN AS22 PROJECT A/E
APPROVAL RECOMMENDED: TIM DOSS AS22 SUPPORT A/E
APPROVAL RECOMMENDED: PHIL HENDRIX AS22 TEAM LEAD
SPEC. NO. FAC-M5063

APPROVED: NELSON OLINGER
AS22 GROUP LEAD DATE: 09/15/15

DRAWING NO. FAC-CU-4711-E601
SHEET 25 OF 38

FINAL SUBMITTAL
ISSUED FOR CONSTRUCTION
REF. NO. E601

BASE BID DETAILS

Master Bid Disk 10-06-2015

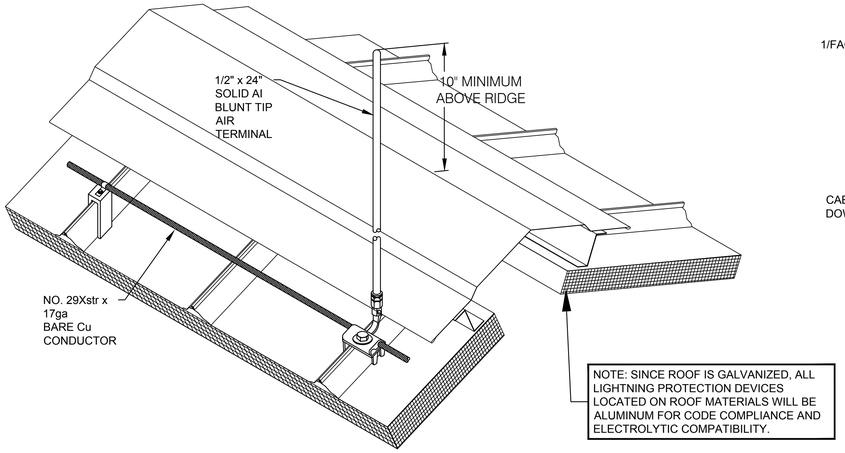

1 ROOF PEAK AIR TERMINAL MOUNT
E401 E602 NO SCALE *ADD ALT #2

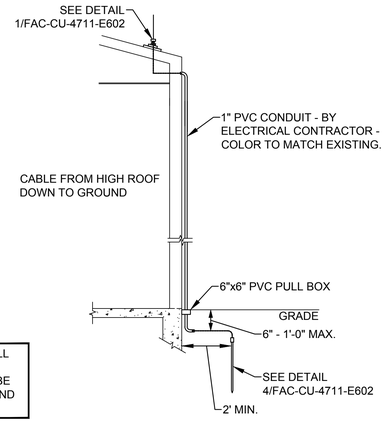

2 TYPICAL DOWNLEAD ROUTING
E401 E602 NO SCALE *ADD ALT #2

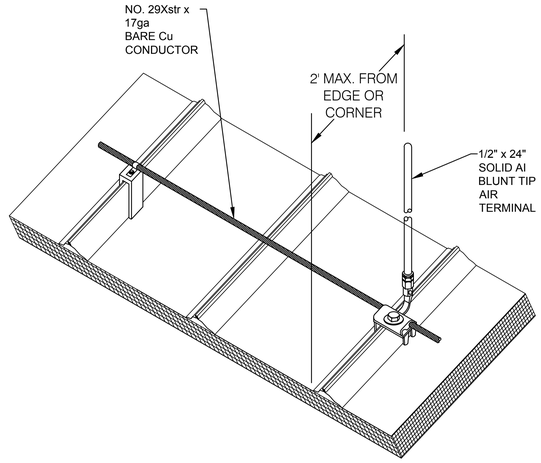

3 ROOF EDGE AIR TERMINAL MOUNT
E401 E602 NO SCALE *ADD ALT #2

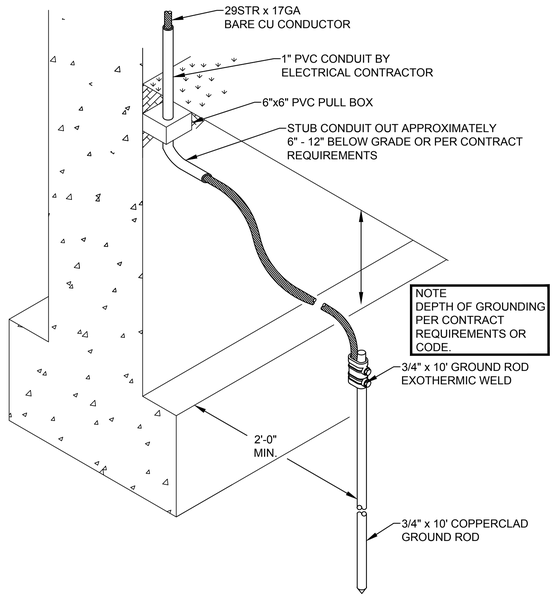

4 DOWN LEAD TO GROUND ROD
E401 E602 NO SCALE *ADD ALT #2

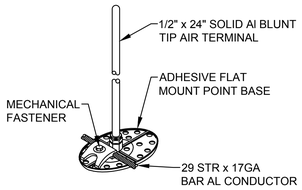

5 VENTILATION MOUNTED AIR TERMINAL
E401 E602 NO SCALE *ADD ALT #2

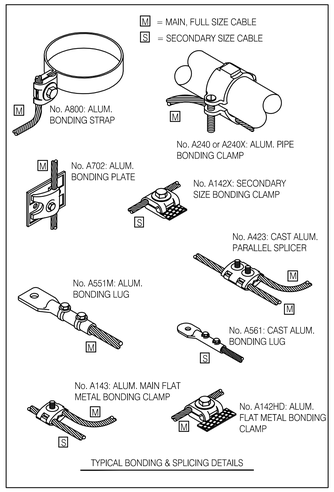

6 MISC. DETAILS
E401 E602 NO SCALE *ADD ALT #2

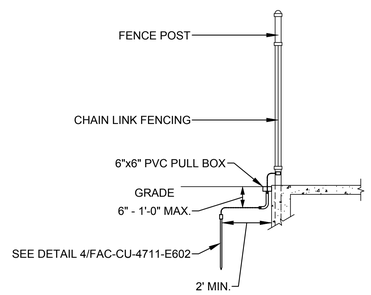

7 FENCE GROUNDING DETAIL
E401 E602 NO SCALE *ADD ALT #2

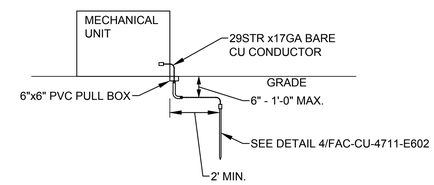

8 MECHANICAL UNIT GROUNDING DETAIL
E401 E602 NO SCALE *ADD ALT #2

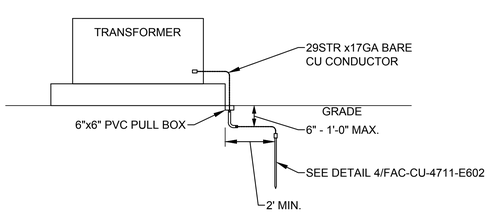

9 TRANSFORMER GROUNDING DETAIL
E401 E602 NO SCALE *ADD ALT #2

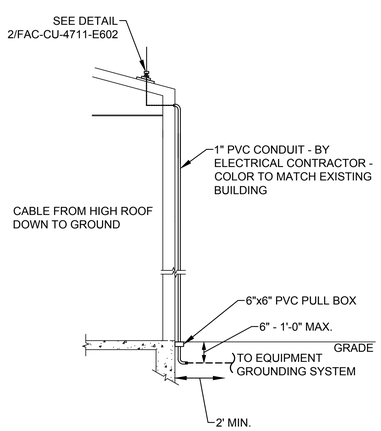

10 EQUIPMENT DOWNLEAD ROUTING
E401 E602 NO SCALE *ADD ALT #2

WARNING
DO NOT SCALE THIS DRAWING
THIS DRAWING WAS DESIGNED TO BE PRINTED AT A NASA SHEET SIZE: MSFC STD. SIZE 40" X 28"

LARAMIE REGISTERED No. 26967 PROFESSIONAL 9/4/15 ENGINEER JOHN AVERRETT

REV	BY	DATE	REVISION	C.I. NO.	APPROVED

Marshall Space Flight Center
Huntsville, Alabama 35812

BUILDING 4711
REVITALIZE ELECTRICAL SYSTEMS
ELECTRICAL DETAILS
ADD ALT. #2 & #5

AE FIRM: GOODWYN | MILLS | CAWOOD — MERRICK & COMPANY — JOINT VENTURE

NASA AE CONTRACT NO. NNM12AA49C NNM14AA72T

SUBMITTED: JENNIFER LANDRY
AE: DATE: 09/15/15
DESIGNED S. CRITTENDEN
DRAWN M. PATE
CHECKED J. AVERRETT
SCALE: NO SCALE

APPROVAL RECOMMENDED: CODY GOODMAN, AS22 PROJECT A/E
APPROVAL RECOMMENDED: TIM DOSS, AS22 SUPPORT A/E
APPROVAL RECOMMENDED: PHIL HENDRIX, AS22 TEAM LEAD
SPEC. NO. FAC-M5063

APPROVED: NELSON OLINGER, AS22 GROUP LEAD DATE: 09/15/15

DRAWING NO. FAC-CU-4711-E602
SHEET 26 OF 38

FINAL SUBMITTAL
ISSUED FOR CONSTRUCTION
REF. NO. E602

Master Bid Disk 10-06-2015

A | B | C | D | E | F | G

4711 PANEL COORDINATION	
EXISTING MAXIMO #	OLD MAXIMO #
4711-PP0001	4711-PNL0012
4711-PP0002	4711-PNL0034
4711-PP0003	4711-PNL0044
4711-PP0004	4711-PNL0047
4711-PP0005	4711-PNL0055
4711-PP0006	-
4711-PP0007	-
4711-PP0008	-
4711-RP0001	4711-PNL0001
4711-RP0002	4711-PNL0002
4711-RP0003	4711-PNL0003
4711-RP0004	4711-PNL0004
4711-RP0005	4711-PNL0005
4711-RP0006	4711-PNL0006
4711-RP0007	4711-PNL0007
4711-RP0008	4711-PNL0008
4711-RP0009	4711-PNL0056
4711-RP0010	4711-PNL0010
4711-RP0011	4711-PNL0011
4711-RP0013	4711-PNL0013
4711-RP0014	4711-PNL0014
4711-RP0015	4711-PNL0015
4711-RP0016	4711-PNL0016
4711-RP0017	4711-PNL0017
4711-RP0018	4711-PNL0018
4711-RP0019	4711-PNL0019
4711-RP0020	4711-PNL0020
4711-RP0021	4711-PNL0021
4711-RP0022	4711-PNL0022
4711-RP0023	4711-PNL0023
4711-RP0024	4711-PNL0024
4711-RP0025	4711-PNL0025
4711-RP0027	4711-PNL0027
4711-RP0028	4711-PNL0028
4711-RP0031	4711-PNL0031
4711-RP0032	4711-PNL0032
4711-RP0033	4711-PNL0033
4711-RP0035	4711-PNL0035
4711-RP0037	4711-PNL0037
4711-RP0038	4711-PNL0038
4711-RP0039	4711-PNL0039
4711-RP0040	4711-PNL0040
4711-RP0041	4711-PNL0041
4711-RP0042	4711-PNL0042
4711-RP0043	4711-PNL0043
4711-RP0045	4711-PNL0045
4711-RP0046	4711-PNL0046
4711-RP0048	4711-PNL0048
4711-RP0049	4711-PNL0049
4711-RP0050	4711-PNL0050
4711-RP0051	4711-PNL0051
4711-RP0052	4711-PNL0052
4711-RP0056	4711-PNL0056
4711-RP0057	4711-PNL0057
4711-RP0058	4711-PNL0058
4711-RP0059	4711-PNL0059
4711-RP0060	-

ELECTRICAL PANEL SCHEDULE (TO BE REPLACED) [1]

PANEL 4711-RP0001 (4711-PNL0001)
LOCATION RM. W132
MOUNTING SURFACE
MFR./TYPE SQUARE D
MAIN BKR 100A
MAIN FEEDER SIZE 4#3 & 1#8G - 1-1/4"C

VOLTAGE 120/208
PHASE 3
WIRE 4
AMPS 200
AIC RATING 10K
FED FROM 4711-RP0002 VIA 4711-SS0010

CK1	PH	FRAME & AMPS	LOAD DESCRIPTION	KVA LOAD a∅	b∅	c∅	CK1	PH	FRAME & AMPS	LOAD DESCRIPTION	KVA LOAD a∅	b∅	c∅
1	A	30A/2P	COMPRESSOR				2	A	20A/1P	SPARE			
3	B	-	-				4	B	20A/1P	SPARE			
5	C	30A/2P	SPARE				6	C	20A/1P	SPARE			
7	A	-	-				8	A	20A/1P	SPARE			
9	B	30A/3P	SPARE				10	B	20A/1P	SPARE			
11	C	-	-				12	C	20A/2P	SPARE			
13	A	-					14	A	-	-			
15	B	20A/1P	SPARE				16	B	30A/1P	SPARE			
17	C	20A/1P	SPARE				18	C	20A/1P	SPARE			
19	A	20A/1P	SPARE				20	A	20A/1P	SPARE			
21	B	20A/1P	SPARE				22	B	20A/1P	SPARE			
23	C	20A/1P	SPARE				24	C	20A/1P	SPARE			
25	A	30A/3P	SPARE				26	A	20A/1P	SPARE			
27	B	-	-				28	B	20A/1P	SPARE			
29	C	-	-				30	C	20A/1P	SPARE			
SUB TOTAL							SUB TOTAL						

CONNECTED LOAD
A ∅ : 0 KVA : _____AMPS
B ∅ : 0 KVA : _____AMPS
C ∅ : 0 KVA : _____AMPS

ALL BUS SHALL BE 1000 APSI COPPER

ISOLATED GROUND BUS [ ]
NEUTRAL BUS [✓]
GROUND BUS [✓]
SUB FEED BUS [ ]

ELECTRICAL PANEL SCHEDULE (TO REMAIN) [2]

PANEL 4711-RP0002 (4711-PNL0002)
LOCATION OUTSIDE RM. W132
MOUNTING FLUSH
MFR./TYPE SIEMENS
MAIN BKR MLO
MAIN FEEDER SIZE 4#4/0, 1#4G - 2-1/2"C

VOLTAGE 120/208
PHASE 3
WIRE 4
AMPS 250
AIC RATING 22K
FED FROM 4711-PP0008

CK1	PH	FRAME & AMPS	LOAD DESCRIPTION	KVA LOAD a∅	b∅	c∅	CK1	PH	FRAME & AMPS	LOAD DESCRIPTION	KVA LOAD a∅	b∅	c∅
1	A	20A/1P	RECPT RM 132 PLUGMOLD				2	A	20A/1P	PLUG MOLD RM 132			
3	B	20A/1P	RECPT RM 132 PLUGMOLD				4	B	20A/1P	PLUG MOLD RM 132			
5	C	20A/1P	RECPT RM 132 PLUGMOLD				6	C	20A/1P	RECEPTACLES			
7	A	20A/1P	RECEPTACLES				8	A	50A/3P	SP			
9	B	20A/1P	RECEPTACLES				10	B	-	-			
11	C	20A/1P	SURE FLOW ALARM				12	C	-	-			
13	A	20A/1P	SPARE				14	A	100A/3P	4711-RP0001			
15	B	20A/1P	SPARE				16	B	-	-			
17	C	20A/1P	SPARE				18	C	-	-			
19	A	30A/1P	SPARE				20	A	20A/1P	RECEPTACLES			
21	B	20A/2P	SPARE				22	B	20A/1P	SP			
23	C	-	-				24	C	50A/2P	DISCONNECT RM 134			
25	A	20A/1P	SPARE				26	A	-	-			
27	B	50A/3P	SPARE				28	B	30A/2P	DISCONNECT RM 134			
29	C	-	-				30	C	-	-			
31	A	-	-				32	A	-	SPACE			
33	B	-	SPACE				34	B	-	SPACE			
35	C	-	SPACE				36	C	-	SPACE			
37	A	-	SPACE				38	A	-	SPACE			
39	B	-	SPACE				40	B	-	SPACE			
41	C	-	SPACE				42	C	-	SPACE			
SUB TOTAL							SUB TOTAL						

CONNECTED LOAD
A ∅ : 0 KVA : _____AMPS
B ∅ : 0 KVA : _____AMPS
C ∅ : 0 KVA : _____AMPS

ALL BUS SHALL BE 1000 APSI COPPER

ISOLATED GROUND BUS [ ]
NEUTRAL BUS [✓]
GROUND BUS [✓]
SUB FEED BUS [ ]

ELECTRICAL PANEL SCHEDULE (TO BE REPLACED) [1]

PANEL 4711-RP0003 (4711-PNL0003)
LOCATION OUTSIDE RM. W126
MOUNTING FLUSH
MFR./TYPE SQUARE D
MAIN BKR 200A
MAIN FEEDER SIZE 4#3/0, 1#6G - 2"C

VOLTAGE 120/208
PHASE 3
WIRE 4
AMPS 200
AIC RATING 10K
FED FROM 4711-PP0006

CK1	PH	FRAME & AMPS	LOAD DESCRIPTION	KVA LOAD a∅	b∅	c∅	CK1	PH	FRAME & AMPS	LOAD DESCRIPTION	KVA LOAD a∅	b∅	c∅
1	A	20A/1P	SPARE				2	A	20A/1P	REC RM 169 & W100C			
3	B	20A/1P	SPARE				4	B	20A/1P	REC RM W145			
5	C	20A/1P	LTS W126				6	C	20A/1P	LTS E4			
7	A	20A/1P	SPARE				8	A	20A/1P	SPARE			
9	B	20A/1P	REC IN E4				10	B	20A/1P	SPARE			
11	C	20A/1P	REC IN E4				12	C	20A/1P	SPARE			
13	A	20A/1P	SPARE				14	A	20A/1P	EWS REC			
15	B	20A/1P	SPARE				16	B	20A/1P	CLOCK REC HALLWAY			
17	C	20A/1P	REC RM W126				18	C	20A/1P	REC RM W126			
19	A	20A/1P	SURE FLOW W126				20	A	20A/1P	SPARE			
21	B	20A/1P	SPARE				22	B	20A/1P	SPARE			
23	C	20A/1P	EMERG LTS W126				24	C	20A/1P	SPARE			
25	A	20A/1P	REC RM W126				26	A	20A/1P	LTS ABV. MICROWAVE IN HALL			
27	B	20A/1P	REC W100A				28	B	20A/1P	LTS MENS RM			
29	C	40A/3P	-				30	C	20A/1P	REC MENS RM			
31	A	-	-				32	A	20A/1P	SPARE			
33	B	-	-				34	B	20A/1P	SPARE			
35	C	30A/2P	SPARE				36	C	30A/3P	4711-STRT0001			
37	A	-	-				38	A	-	REC W129			
39	B	20A/1P	SPARE				40	B	-	-			
41	C	20A/1P	SPARE				42	C	20A/1P	SPARE			
SUB TOTAL							SUB TOTAL						

CONNECTED LOAD
A ∅ : 0 KVA : _____AMPS
B ∅ : 0 KVA : _____AMPS
C ∅ : 0 KVA : _____AMPS

ALL BUS SHALL BE 1000 APSI COPPER

ISOLATED GROUND BUS [ ]
NEUTRAL BUS [✓]
GROUND BUS [✓]
SUB FEED BUS [ ]

PLAN NOTES

1. REPLACE EXISTING PANEL WITH NEW PANEL AS SHOWN.
2. EXISTING PANEL TO REMAIN, NO WORK AT THIS TIME.
3. NOT USED.

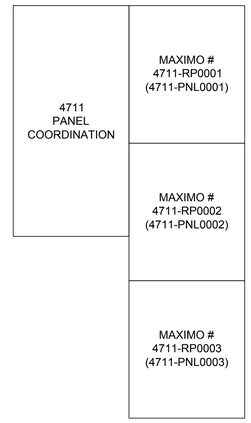

SCHEDULE PLAN
NOT TO SCALE

WARNING
DO NOT SCALE THIS DRAWING
THIS DRAWING WAS DESIGNED TO BE PRINTED AT A NASA SHEET SIZE: MSFC STD. SIZE 40" X 28"

ALABAMA REGISTERED No. 26987 PROFESSIONAL ENGINEER JOHN AVERRETT 9/4/15

REV	BY	DATE	REVISION	C.I. NO.	APPROVED

Marshall Space Flight Center
Huntsville, Alabama 35812

BUILDING 4711
REVITALIZE ELECTRICAL SYSTEMS

PANEL SCHEDULES & COORDINATION

AE FIRM: GOODWYN | MILLS | CAWOOD — MERRICK & COMPANY — JOINT VENTURE

NASA AE CONTRACT NO. NNM12AA49C NNM14AA72T

SUBMITTED: JENNIFER LANDRY
AE: DATE: 09/15/15
DESIGNED S. CRITTENDEN
DRAWN M. PATE
CHECKED J. AVERRETT
SCALE: AS SHOWN

APPROVAL RECOMMENDED: CODY GOODMAN, AS22 PROJECT A/E
APPROVAL RECOMMENDED: TIM DOSS, AS22 SUPPORT A/E
APPROVAL RECOMMENDED: PHIL HENDRIX, AS22 TEAM LEAD
SPEC. NO. FAC-M5063

APPROVED: NELSON OLINGER, AS22 GROUP LEAD DATE: 09/15/15

DRAWING NO. FAC-CU-4711-E701
SHEET 27 OF 38

FINAL SUBMITTAL
ISSUED FOR CONSTRUCTION
REF. NO. E701

Master Bid Disk 10-06-2015

ELECTRICAL PANEL SCHEDULE (TO BE REPLACED) [1]

PANEL 4711-RP0004 (4711-PNL0004) — VOLTAGE 120/208
LOCATION RM. W122 — PHASE 3
MOUNTING SURFACE — WIRE 4
MFR./TYPE SQUARE D — AMPS 200
MAIN BKR 100 — AIC RATING 10K
MAIN FEEDER SIZE 4#3, 1#8G - 1-1/4"C — FED FROM 4711-PP0006

CK1	PH	FRAME & AMPS	LOAD DESCRIPTION	KVA LOAD aØ	bØ	cØ	CK1	PH	FRAME & AMPS	LOAD DESCRIPTION	KVA LOAD aØ	bØ	cØ
1	A	20A/1P	REC UP HIGH BEND RISER E4				2	A	30A/3P	4711-SS0002			
3	B	20A/3P	RECEPTACLE @ RM 126				4	B	-	-			
5	C	-	-				6	C	-	-			
7	A	-	-				8	A	30A/2P	SPARE			
9	B	40A/2P	SPARE				10	B	-	-			
11	C	-	-				12	C	20A/1P	RECEPTACLE @ RM 126			
13	A	20A/1P	RECEPTACLE @ RM 126				14	A	20A/1P	RECEPTACLE @ RM 127			
15	B	20A/1P	RECEPTACLE @ RM 127				16	B	20A/1P	RECEPTACLE @ RM 128			
17	C	20A/1P	RECEPTACLE @ RM 128				18	C	20A/1P	RECEPTACLE @ RM 129			
19	A	20A/1P	RECEPTACLE @ RM 129				20	A	20A/1P	REC RM E4			
21	B	60A/3P	FEED FOR 4711-RP0005				22	B	20A/1P	REC RM E4			
23	C	-	-				24	C	20A/1P	DISC. 4711-SS0001 E9			
25	A	-	-				26	A	20A/1P	SPARE			
27	B	20A/1P	SPARE				28	B	20A/1P	SPARE			
29	C	20A/1P	SPARE				30	C	20A/1P	SPARE			
SUB TOTAL							SUB TOTAL						

CONNECTED LOAD
A Ø: 0 KVA : ________AMPS — ALL BUS SHALL BE 1000 APSI COPPER
B Ø: 0 KVA : ________AMPS
C Ø: 0 KVA : ________AMPS

ISOLATED GROUND BUS ☐
NEUTRAL BUS ✓
GROUND BUS ✓
SUB FEED BUS ☐

ELECTRICAL PANEL SCHEDULE (TO BE REPLACED) [1]

PANEL 4711-RP0005 (4711-PNL0005) — VOLTAGE 120/208
LOCATION RM. W122 — PHASE 3
MOUNTING SURFACE — WIRE 4
MFR./TYPE SQUARE D — AMPS 200
MAIN BKR 60 — AIC RATING 10K
MAIN FEEDER SIZE 4#6, 1#8G - 1"C — FED FROM 4711-RP0004

CK1	PH	FRAME & AMPS	LOAD DESCRIPTION	KVA LOAD aØ	bØ	cØ	CK1	PH	FRAME & AMPS	LOAD DESCRIPTION	KVA LOAD aØ	bØ	cØ
1	A	20A/1P	FACP IN LOBBY				2	A	20A/1P	OUTSIDE LIGHTS S/SIDE			
3	B	20A/1P	ABND IN CEILING RM W133				4	B	20A/1P	SPARE			
5	C	20A/1P	ABND ABOVE CEILING AT ENTR				6	C	20A/1P	SPARE			
7	A	20A/1P	WALL PACKS W/WALL				8	A	20A/1P	SPARE			
9	B	20A/1P	EXHAUST FAN MENS RM HOA				10	B	20A/1P	SPARE			
11	C	20A/1P	OUTSIDE LTS W/SIDE				12	C	20A/1P	SPARE			
13	A	20A/1P	SPARE				14	A	20A/1P	SPARE			
15	B	20A/1P	SPARE				16	B	20A/1P	SPARE			
17	C	20A/1P	SPARE				18	C	20A/1P	SPARE			
19	A	20A/1P	SPARE				20	A	20A/1P	SPARE			
21	B	20A/1P	SPARE				22	B	20A/1P	SPARE			
23	C	20A/1P	SPARE				24	C	20A/1P	SPARE			
25	A	20A/1P	SPARE				26	A	20A/1P	SPARE			
27	B	20A/1P	SPARE				28	B	20A/1P	SPARE			
29	C	20A/1P	SPARE				30	C	20A/1P	SPARE			
SUB TOTAL							SUB TOTAL						

CONNECTED LOAD
A Ø: 0 KVA : ________AMPS — ALL BUS SHALL BE 1000 APSI COPPER
B Ø: 0 KVA : ________AMPS
C Ø: 0 KVA : ________AMPS

ISOLATED GROUND BUS ☐
NEUTRAL BUS ✓
GROUND BUS ✓
SUB FEED BUS ☐

ELECTRICAL PANEL SCHEDULE (TO REMAIN) [2]

PANEL 4711-RP0006 (4711-PNL0006) — VOLTAGE 120/208
LOCATION RM. W132 — PHASE 3
MOUNTING FLUSH — WIRE 4
MFR./TYPE SIEMENS — AMPS 250
MAIN BKR MLO — AIC RATING 10K
MAIN FEEDER SIZE 4#4/0, 1#4G - 2-1/2"C — FED FROM 4711-PP0008

CK1	PH	FRAME & AMPS	LOAD DESCRIPTION	KVA LOAD aØ	bØ	cØ	CK1	PH	FRAME & AMPS	LOAD DESCRIPTION	KVA LOAD aØ	bØ	cØ
1	A	20A/1P	LIGHTS RM 108				2	A	20A/1P	LIGHTS RM 129A			
3	B	20A/1P	LIGHTS RM 108				4	B	20A/1P	LIGHTS RM 129			
5	C	20A/1P	LIGHTS RM 108				6	C	20A/1P	LIGHTS RM 128			
7	A	20A/1P	LIGHTS HALLWAY				8	A	20A/1P	LIGHTS RM 131			
9	B	20A/1P	EMERGENCY LIGHTS				10	B	20A/1P	LIGHTS RM 131			
11	C	20A/1P	LIGHTS				12	C	20A/1P	LIGHTS RM 132			
13	A	20A/1P	LIGHTS RM 133				14	A	20A/1P	LIGHTS RM 132			
15	B	20A/1P	LIGHTS RM 133				16	B	20A/1P	LIGHTS RM 134, 136			
17	C	20A/1P	LIGHTS RM 133				18	C	20A/1P	LIGHTS			
19	A	20A/1P	LIGHTS RM 135				20	A	20A/1P	LIGHTS			
21	B	20A/1P	LIGHTS RM 138				22	B	40A/2P	RECEPTACLES			
23	C	20A/1P	LIGHTS/RECEPTACLES				24	C	-	RECEPTACLES			
25	A	20A/1P	LIGHTS/RECEPTACLES				26	A	20A/1P	LIGHTS			
27	B	20A/1P	SPARE				28	B	20A/1P	SPARE			
29	C	20A/1P	LIGHTS/RECEPTACLES				30	C	20A/1P	LIGHTS/RECEPTACLES			
31	A	20A/2P	4711-PNL0005 IN E4				32	A	-	SPACE			
33	B	-	-				34	B	-	SPACE			
35	C	-	SPACE				36	C	-	SPACE			
37	A	-	SPACE				38	A	-	SPACE			
39	B	-	SPACE				40	B	-	SPACE			
41	C	-	SPACE				42	C	-	SPACE			
SUB TOTAL							SUB TOTAL						

CONNECTED LOAD
A Ø: 0 KVA : ________AMPS — ALL BUS SHALL BE 1000 APSI COPPER
B Ø: 0 KVA : ________AMPS
C Ø: 0 KVA : ________AMPS

ISOLATED GROUND BUS ☐
NEUTRAL BUS ✓
GROUND BUS ✓
SUB FEED BUS ☐

PLAN NOTES

1. REPLACE EXISTING PANEL WITH NEW PANEL AS SHOWN.
2. EXISTING PANEL TO REMAIN, NO WORK AT THIS TIME.
3. NOT USED.

ELECTRICAL PANEL SCHEDULE (TO BE REPLACED AND RELOCATED) [1]

PANEL 4711-RP0007 (4711-PNL0007) — VOLTAGE 120/208
LOCATION RM. 175A — PHASE 3
MOUNTING SURFACE — WIRE 4
MFR./TYPE SQUARE D — AMPS 200
MAIN BKR 150A — AIC RATING 10K
MAIN FEEDER SIZE 4#1/0, 1#6G - 2"C — FED FROM 4711-BDP02AA

CK1	PH	FRAME & AMPS	LOAD DESCRIPTION	KVA LOAD aØ	bØ	cØ	CK1	PH	FRAME & AMPS	LOAD DESCRIPTION	KVA LOAD aØ	bØ	cØ
1	A	30A/1P	LIGHTS				2	A	20A/1P	LIGHTS			
3	B	30A/1P	LIGHTS				4	B	20A/1P	LIGHTS			
5	C	20A/1P	LIGHTS				6	C	20A/1P	RECEPTACLES			
7	A	20A/1P	LIGHTS				8	A	20A/1P	TIME SWITCH			
9	B	20A/1P	RECEPTACLES				10	B	20A/1P	RECEPTACLES			
11	C	20A/1P	RECEPTACLES				12	C	20A/1P	RECEPTACLES			
13	A	20A/1P	RECEPTACLES				14	A	30A/1P	RECEPTACLES			
15	B	20A/1P	RECEPTACLES				16	B	20A/1P	LIGHTS			
17	C	20A/1P	RECEPTACLES				18	C	20A/1P	RECEPTACLES			
19	A	20A/1P	RECEPTACLES				20	A	20A/1P	RECEPTACLES			
21	B	20A/1P	UPS				22	B	20A/1P				
23	C	20A/1P					24	C	20A/1P	SPARE			
25	A	20A/1P	SPARE				26	A	20A/1P	SPARE			
27	B	20A/3P	SPARE				28	B	20A/1P	METER			
29	C	-	-				30	C	20A/2P	4711-XFMR0015			
31	A	-	-				32	A	-	-			
33	B	20A/2P	4711-XFMR0014				34	B	20A/2P	4711-XFMR0016			
35	C	-	-				36	C	-	-			
37	A	30A/3P	4711-SS0056				38	A	20A/1P	SPARE			
39	B	-	-				40	B	20A/2P	SPARE			
41	C	-	-				42	C	-	-			
SUB TOTAL							SUB TOTAL						

CONNECTED LOAD
A Ø: 0 KVA : ________AMPS — ALL BUS SHALL BE 1000 APSI COPPER
B Ø: 0 KVA : ________AMPS
C Ø: 0 KVA : ________AMPS

ISOLATED GROUND BUS ☐
NEUTRAL BUS ✓
GROUND BUS ✓
SUB FEED BUS ☐

ELECTRICAL PANEL SCHEDULE (TO REMAIN) [2]

PANEL 4711-RP0008 (4711-PNL0008) — VOLTAGE 120/208
LOCATION RM. W128 — PHASE 3
MOUNTING FLUSH — WIRE 4
MFR./TYPE SIEMENS — AMPS 250
MAIN BKR MLO — AIC RATING 22K
MAIN FEEDER SIZE 4#4/0, 1#4G - 2-1/2"C — FED FROM 4711-PP0008

CK1	PH	FRAME & AMPS	LOAD DESCRIPTION	KVA LOAD aØ	bØ	cØ	CK1	PH	FRAME & AMPS	LOAD DESCRIPTION	KVA LOAD aØ	bØ	cØ
1	A	20A/1P	RECEPTACLE W131				2	A	100A/3P	SPARE			
3	B	20A/1P	RECEPTACLE W131				4	B	-	-			
5	C	20A/1P	RECEPTACLE W131				6	C	-	-			
7	A	20A/1P	RECEPTACLE W130				8	A	20A/1P	REF W130			
9	B	20A/1P	VACUUM 131-129				10	B	20A/1P	SPARE			
11	C	70A/1P	SPARE				12	C	20A/1P	RECEPTACLES W128			
13	A	20A/1P	SPARE				14	A	30A/1P	RECEPTACLES W130			
15	B	20A/1P	SPARE				16	B	40A/3P	SPARE			
17	C	20A/1P	RECEPTACLE W130				18	C	-	-			
19	A	20A/1P	RECEPTACLE W130				20	A	-	-			
21	B	20A/1P	RECEPTACLE W130				22	B	30A/2P	PRESS RM W128			
23	C	20A/2P	TWIST LOCK RM W130				24	C	-	-			
25	A	-	-				26	A	70A/2P	SPARE			
27	B	20A/1P	SPARE				28	B	-	-			
29	C	100A/2P	SPARE				30	C	30A/1P	RECEPTACLES W128			
31	A	-	-				32	A	30A/1P	RECEPTACLES W128			
33	B	20A/1P	RECEPTACLE W131				34	B	30A/1P	RECEPTACLES W128			
35	C	20A/1P	RECEPTACLE W131				36	C	70A/2P	SPARE			
37	A	20A/1P	RECEPTACLE W128				38	A	-	-			
39	B	30A/1P	RECEPTACLE W129				40	B	20A/2P	SPARE			
41	C	30A/1P	RECEPTACLE W129				42	C	-	-			
SUB TOTAL							SUB TOTAL						

CONNECTED LOAD
A Ø: 0 KVA : ________AMPS — ALL BUS SHALL BE 1000 APSI COPPER
B Ø: 0 KVA : ________AMPS
C Ø: 0 KVA : ________AMPS

ISOLATED GROUND BUS ☐
NEUTRAL BUS ✓
GROUND BUS ✓
SUB FEED BUS ☐

ELECTRICAL PANEL SCHEDULE (TO BE REPLACED) [1]

PANEL 4711-RP0009 (4711-PNL0056) — VOLTAGE 120/208
LOCATION RM. E178 — PHASE 3
MOUNTING SURFACE — WIRE 4
MFR./TYPE SQUARE D — AMPS 200
MAIN BKR 150A — AIC RATING 10K
MAIN FEEDER SIZE 4#1/0, 1#6G - 2"C — FED FROM 4711-XFMR0005

CK1	PH	FRAME & AMPS	LOAD DESCRIPTION	KVA LOAD aØ	bØ	cØ	CK1	PH	FRAME & AMPS	LOAD DESCRIPTION	KVA LOAD aØ	bØ	cØ
1	A	40A/2P	SPARE				2	A	40A/2P	SPARE			
3	B	-	-				4	B	-	-			
5	C	50A/2P	SPARE				6	C	70A/2P	SPARE			
7	A	-	-				8	A	-	-			
9	B	100A/2P	SPARE				10	B	20A/1P	O2 MONITOR			
11	C	-	-				12	C	20A/1P	RECEPTACLE UNDER PNL			
13	A	20A/1P	SPARE				14	A	-	SPACE			
15	B	20A/1P	SPARE				16	B	20A/1P	RECEP. FOR UCS POWER			
17	C	20A/1P	SPARE				18	C	20A/1P	SPARE			
19	A	20A/1P	SPARE				20	A	20A/1P	SPARE			
21	B	20A/1P	SPARE				22	B	20A/1P	SPARE			
23	C	20A/1P	SPARE				24	C	20A/1P	SPARE			
25	A	20A/1P	SPARE				26	A	20A/1P	SPARE			
27	B	20A/1P	SPARE				28	B	20A/1P	SPARE			
29	C	20A/1P	SPARE				30	C	20A/1P	SPARE			
31	A	20A/1P	SPARE				32	A	20A/1P	SPARE			
33	B	20A/1P	SPARE				34	B	20A/1P	SPARE			
35	C	20A/1P	SPARE				36	C	20A/1P	SPARE			
37	A	20A/1P	SPARE				38	A	20A/1P	SPARE			
39	B	20A/1P	SPARE				40	B	20A/1P	SPARE			
41	C	20A/1P	SPARE				42	C	20A/1P	SPARE			
SUB TOTAL							SUB TOTAL						

CONNECTED LOAD
A Ø: 0 KVA : ________AMPS — ALL BUS SHALL BE 1000 APSI COPPER
B Ø: 0 KVA : ________AMPS
C Ø: 0 KVA : ________AMPS

ISOLATED GROUND BUS ☐
NEUTRAL BUS ✓
GROUND BUS ✓
SUB FEED BUS ☐

MAXIMO # 4711-RP0004 (4711-PNL0004)	MAXIMO # 4711-RP0005 (4711-PNL0005)	MAXIMO # 4711-RP0006 (4711-PNL0006)
MAXIMO # 4711-RP0007 (4711-PNL0007)	MAXIMO # 4711-RP0008 (4711-PNL0008)	MAXIMO # 4711-RP0009 (4711-PNL0056)
MAXIMO # 4711-RP0010 (4711-PNL0010)	MAXIMO # 4711-RP0011 (4711-PNL0011)	

SCHEDULE PLAN

NOT TO SCALE

ELECTRICAL PANEL SCHEDULE (TO BE REPLACED) [1]

PANEL 4711-RP0010 (4711-PNL0010) — VOLTAGE 120/208
LOCATION RM. W175A — PHASE 3
MOUNTING SURFACE — WIRE 4
MFR./TYPE SQUARE D — AMPS 200
MAIN BKR 150A — AMPS 10K
MAIN FEEDER SIZE 4#1/0, 1#6G - 2"C — FED FROM 4711-BDP003Q

CK1	PH	FRAME & AMPS	LOAD DESCRIPTION	KVA LOAD aØ	bØ	cØ	CK1	PH	FRAME & AMPS	LOAD DESCRIPTION	KVA LOAD aØ	bØ	cØ
1	A	50A/1P					2	A	20A/1P				
3	B	50A/1P	BLACK LIGHT				4	B	20A/1P				
5	C	20A/1P	REC. IN ROOM 131				6	C	20A/1P				
7	A	20A/1P	REC. IN ROOM 131				8	A	20A/1P	REC. IN ROOM 131			
9	B	20A/1P	REC. IN ROOM 131				10	B	20A/1P	REC. IN ROOM 131			
11	C	20A/2P	FUME HOOD RM. 108				12	C	20A/1P				
13	A	-	-				14	A	50A/1P				
15	B	30A/1P	AIR COMP. SOUTH WALL				16	B	20A/1P				
17	C	20A/1P					18	C	20A/1P				
19	A	30A/3P	RECEPTACLES				20	A	20A/1P				
21	B	-	-				22	B	20A/1P	RECEPTACLES			
23	C	-	-				24	C	20A/1P	RECEPTACLES			
25	A	30A/3P	RECEPTACLES				26	A	30A/3P	RECEPTACLES			
27	B	-	-				28	B	-	-			
29	C	-	-				30	C	-	-			
31	A	30A/3P	SPARE				32	A	15A/2P	REFEED 4711-CBP0005 LOAD			
33	B	-	-				34	B	-	-			
35	C	-	-				36	C	20A/2P	SPARE			
37	A	20A/1P	SPARE				38	A	-	-			
39	B	20A/1P	SPARE				40	B	20A/1P	SPARE			
41	C	20A/1P	SPARE				42	C	20A/1P	SPARE			
SUB TOTAL							SUB TOTAL						

CONNECTED LOAD
A Ø: 0 KVA : ________AMPS — ALL BUS SHALL BE 1000 APSI COPPER
B Ø: 0 KVA : ________AMPS
C Ø: 0 KVA : ________AMPS

ISOLATED GROUND BUS ☐
NEUTRAL BUS ✓
GROUND BUS ✓
SUB FEED BUS ☐

ELECTRICAL PANEL SCHEDULE (TO REMAIN) [2]

PANEL 4711-RP0011 (4711-PNL0011) — VOLTAGE 120/208
LOCATION OUTSIDE RM. E179 — PHASE 3
MOUNTING SURFACE — WIRE 4
MFR./TYPE SIEMENS — AMPS 125
MAIN BKR MLO — AIC RATING 22K
MAIN FEEDER SIZE 4#3, 1#6G - 3"C — FED FROM 4711-RP0013

CK1	PH	FRAME & AMPS	LOAD DESCRIPTION	KVA LOAD aØ	bØ	cØ	CK1	PH	FRAME & AMPS	LOAD DESCRIPTION	KVA LOAD aØ	bØ	cØ
1	A	20A/1P	REC 179 N/WALL				2	A	20A/1P	REC ALONG WALL 174			
3	B	20A/1P	REC 179 N/WALL				4	B	20A/1P	REC SW/WALL 179			
5	C	20A/1P	TRANE AHU				6	C	20A/1P	REC SW/WALL 179			
7	A	20A/1P	LTS 179				8	A	30A/2P	REC SW/WALL 179			
9	B	20A/1P	LTS 179				10	B	-	-			
11	C	20A/1P	LTS 179				12	C	20A/1P	REC.			
13	A	20A/1P	REC 179 & RM PROCESS				14	A	30A/2P	DISC SE/WALL 179			
15	B	20A/1P	REC 179				16	B	-	-			
17	C	20A/1P	REC 179				18	C	20A/1P	4711-SS0061			
19	A	20A/1P	REC 174				20	A	20A/1P	4711-SS0062			
21	B	20A/1P	REC 174				22	B	20A/1P	REC SE/WALL 179			
23	C	20A/1P	SPARE				24	C	20A/1P	REC SE/WALL 179			
25	A	30A/3P	REC 208V 179 S/WALL				26	A	20A/3P	REC N/WALL 125/250V			
27	B	-	-				28	B	-	-			
29	C	-	-				30	C	-	-			
31	A	-	SPACE				32	A	30A/1P	REC N/WALL E176			
33	B	-	SPACE				34	B	-	SPACE			
35	C	-	SPACE				36	C	-	SPACE			
37	A	-	SPACE				38	A	-	SPACE			
39	B	-	SPACE				40	B	-	SPACE			
41	C	-	SPACE				42	C	-	SPACE			
SUB TOTAL							SUB TOTAL						

CONNECTED LOAD
A Ø: 0 KVA : ________AMPS — ALL BUS SHALL BE 1000 APSI COPPER
B Ø: 0 KVA : ________AMPS
C Ø: 0 KVA : ________AMPS

ISOLATED GROUND BUS ☐
NEUTRAL BUS ✓
GROUND BUS ✓
SUB FEED BUS ☐

WARNING
DO NOT SCALE THIS DRAWING
THIS DRAWING WAS DESIGNED TO BE PRINTED AT A NASA SHEET SIZE: MSFC STD. SIZE 40" X 28"

ALABAMA REGISTERED No. 26967 PROFESSIONAL ENGINEER JOHN AVERRETT 9/4/15

REV	BY	DATE	REVISION	C.I. NO.	APPROVED

Marshall Space Flight Center
Huntsville, Alabama 35812

BUILDING 4711
REVITALIZE ELECTRICAL SYSTEMS

PANEL SCHEDULES

AE FIRM: GOODWYN | MILLS | CAWOOD — MERRICK & COMPANY — JOINT VENTURE
NASA AE CONTRACT NO. NNM12AA49C NNM14AA72T

SUBMITTED: JENNIFER LANDRY
AE: DATE: 09/15/15
DESIGNED S. CRITTENDEN
DRAWN M. PATE
CHECKED J. AVERRETT
SCALE: AS SHOWN

APPROVAL RECOMMENDED: CODY GOODMAN, AS22 PROJECT A/E
APPROVAL RECOMMENDED: TIM DOSS, AS22 SUPPORT A/E
APPROVAL RECOMMENDED: PHIL HENDRIX, AS22 TEAM LEAD
SPEC. NO. FAC-M5063

APPROVED: NELSON OLINGER, AS22 GROUP LEAD — DATE: 09/15/15

FINAL SUBMITTAL
ISSUED FOR CONSTRUCTION
REF. NO. E702

DRAWING NO. FAC-CU-4711-E702
SHEET 28 OF 38

Master Bid Disk 10-06-2015

A | B | C | D | E | F | G

ELECTRICAL PANEL SCHEDULE (TO REMAIN) [2]

PANEL 4711-RP0013 (4711-PNL0013)
LOCATION OUTSIDE RM. E179
MOUNTING SURFACE
MFR./TYPE SIEMENS
MAIN BKR 225A
MAIN FEEDER SIZE 4#4/0 & 1#4G - 2-1/2"C

VOLTAGE 120/208
PHASE 3
WIRE 4
AMPS 250
AIC RATING 10K
FED FROM 4711-PP0006

CK1	PH	FRAME & AMPS	LOAD DESCRIPTION	KVA LOAD a∅	b∅	c∅	CK1	PH	FRAME & AMPS	LOAD DESCRIPTION	KVA LOAD a∅	b∅	c∅
1	A	20A/1P	SP CIN RM. 179				2	A	100A/3P	SPARE			
3	B	20A/1P	SP CIN RM. 179				4	B	-	-			
5	C	20A/1P	SP CIN RM. 179				6	C	-	-			
7	A	30A/3P	RECPTACLE NORTH WALL				8	A	20A/1P	RECEPTACLE			
9	B	-	-				10	B	20A/1P	RECEPTACLE			
11	C	-	-				12	C	30A/3P	SPARE			
13	A	30A/2P	TWIST LOCK RECEPT. W WALL				14	A	-	-			
15	B	-	-				16	B	-	-			
17	C	20A/1P	RECP. E-179/87 REC. HALL 140				18	C	30A/3P	SPARE			
19	A	20A/1P	UCS NETWORK PNL				20	A	-	-			
21	B	20A/1P	SPARE				22	B	-	-			
23	C	20A/1P	SPARE				24	C	20A/1P	SPARE			
25	A	30A/1P	-				26	A	20A/1P	SPARE			
27	B	20A/1P	RECEPTACLES				28	B	20A/1P	RECEPT. S. WALL 179A			
29	C	20A/1P	RECEPTACLES				30	C	20A/1P	RECEPTACLES			
31	A	20A/1P	RECEPTACLES				32	A	20A/1P	E179B LIGHTS			
33	B	20A/1P	SPARE				34	B	100A/3P	4711-RP0011			
35	C	20A/1P	SPARE				36	C	-	-			
37	A	20A/2P	RECP. NE WALL RM. 179				38	A	-	-			
39	B	-	-				40	B	-	SPACE			
41	C	20A/1P	RECP. NE WALL RM. 179				42	C	-	SPACE			
SUB TOTAL							SUB TOTAL						

CONNECTED LOAD
A ∅: 0 KVA : _____AMPS
B ∅: 0 KVA : _____AMPS
C ∅: 0 KVA : _____AMPS

ALL BUS SHALL BE 1000 APSI COPPER

ISOLATED GROUND BUS [ ]
NEUTRAL BUS [✓]
GROUND BUS [✓]
SUB FEED BUS [ ]

ELECTRICAL PANEL SCHEDULE (TO BE REPLACED) [1]

PANEL 4711-RP0014 (4711-PNL0014)
LOCATION OUTSIDE RM. W108
MOUNTING SURFACE
MFR./TYPE SQUARE D
MAIN BKR 100A
MAIN FEEDER SIZE 4#3, 1#8G - 1-1/4"C

VOLTAGE 120/208
PHASE 3
WIRE 4
AMPS 200
AIC RATING 10K
FED FROM 4711-PP0006

CK1	PH	FRAME & AMPS	LOAD DESCRIPTION	KVA LOAD a∅	b∅	c∅	CK1	PH	FRAME & AMPS	LOAD DESCRIPTION	KVA LOAD a∅	b∅	c∅
1	A	20A/1P	REC W100F				2	A	20A/1P	REC W148			
3	B	20A/1P	REC W168				4	B	20A/1P	REC W153, HALL AT W153			
5	C	20A/1P	REC 100C, W100D, 100E				6	C	20A/1P	REC W169, 170			
7	A	20A/1P	REC W162				8	A	20A/1P	REC W108			
9	B	20A/1P	REC W100A, W100B				10	B	20A/1P	REC W172			
11	C	20A/1P	REC W166, W167, 160, 161				12	C	20A/1P	REC W108			
13	A	20A/1P	REC W149, W152				14	A	20A/1P	REC W171, W173			
15	B	20A/1P	REC W158				16	B	20A/1P	REC 108			
17	C	20A/1P	RECEPTACLES				18	C	20A/1P	REC W100BB			
19	A	20A/1P	REC W156M, W152				20	A	20A/1P	REC E/HALL BY 108			
21	B	20A/1P	REC W160				22	B	20A/1P	REC W165			
23	C	20A/1P	REC W153				24	C	20A/1P	CONTROL TRANSFORMER			
25	A	20A/1P	REC W150				26	A	20A/1P	SPARE			
27	B	20A/1P	REC 145				28	B	20A/1P	SPARE			
29	C	20A/1P	REC 151, 157				30	C	20A/1P	SPARE			
31	A	20A/1P	SPARE				32	A	20A/1P	SPARE			
33	B	20A/1P	SPARE				34	B	20A/1P	SPARE			
35	C	20A/1P	SPARE				36	C	20A/1P	SPARE			
37	A	20A/1P	SPARE				38	A	20A/1P	SPARE			
39	B	20A/1P	SPARE				40	B	20A/1P	SPARE			
41	C	20A/1P	SPARE				42	C	20A/1P	SPARE			
SUB TOTAL							SUB TOTAL						

CONNECTED LOAD
A ∅: 0 KVA : _____AMPS
B ∅: 0 KVA : _____AMPS
C ∅: 0 KVA : _____AMPS

ALL BUS SHALL BE 1000 APSI COPPER

ISOLATED GROUND BUS [ ]
NEUTRAL BUS [✓]
GROUND BUS [✓]
SUB FEED BUS [ ]

ELECTRICAL PANEL SCHEDULE (TO REMAIN) [2]

PANEL 4711-RP0015 (4711-PNL0015)
LOCATION HALL OUTSIDE RM. W164
MOUNTING FLUSH
MFR./TYPE SIEMENS
MAIN BKR MLO
MAIN FEEDER SIZE 4#3/0, 1#6G - 2"C

VOLTAGE 120/208
PHASE 3
WIRE 4
AMPS 250
AIC RATING 10K
FED FROM 4711-PP0006

CK1	PH	FRAME & AMPS	LOAD DESCRIPTION	KVA LOAD a∅	b∅	c∅	CK1	PH	FRAME & AMPS	LOAD DESCRIPTION	KVA LOAD a∅	b∅	c∅
1	A	20A/1P	LTS W/HALL WY				2	A	20A/1P	LTS W169, 170, 171			
3	B	20A/1P	LTS W100C, W100D, 100E				4	B	20A/1P	LTS W100A, 100B, EMER. LTS			
5	C	20A/1P	LTS W193, 146, 147, 148				6	C	20A/1P	LTS W172, 173			
7	A	20A/1P	REC RM 108				8	A	20A/1P	LTS W160 THRU 167			
9	B	20A/1P	LTS W156, 157, 158				10	B	20A/1P	REC RM 108			
11	C	20A/1P	REC RM 108				12	C	20A/1P	REC RM 108			
13	A	20A/1P	REC RM 108				14	A	20A/1P	REC RM 108			
15	B	20A/1P	REC RM 108				16	B	20A/1P	REC RM 108			
17	C	30A/2P	REC RM 108 208V				18	C	20A/1P	REC RM 108			
19	A	-	-				20	A	30A/2P	REC 208V RM 108			
21	B	30A/2P	REC RM 108 208V				22	B	-	-			
23	C	-	-				24	C	20A/3P	4711-SS0168			
25	A	20A/1P	FUME				26	A	-	-			
27	B	20A/2P	REC RM 108				28	B	-	-			
29	C	-	-				30	C	30A/2P	SPARE			
31	A	20A/3P	SPARE				32	A	-	-			
33	B	-	-				34	B	30A/2P	REC 208V RM 108			
35	C	-	-				36	C	-	-			
37	A	-	SPACE				38	A	30A/2P	REC 208V RM 108			
39	B	-	SPACE				40	B	-	-			
41	C	-	SPACE				42	C	30A/1P	120V 20A RM 108			
SUB TOTAL							SUB TOTAL						

CONNECTED LOAD
A ∅: 0 KVA : _____AMPS
B ∅: 0 KVA : _____AMPS
C ∅: 0 KVA : _____AMPS

ALL BUS SHALL BE 1000 APSI COPPER

ISOLATED GROUND BUS [ ]
NEUTRAL BUS [✓]
GROUND BUS [✓]
SUB FEED BUS [ ]

ELECTRICAL PANEL SCHEDULE (TO REMAIN) [2]

PANEL 4711-RP0016 (4711-PNL0016)
LOCATION OUTSIDE RM. E176
MOUNTING SURFACE
MFR./TYPE SIEMENS
MAIN BKR 225A
MAIN FEEDER SIZE 4#4/0 & 1#4G - 2-1/2"C

VOLTAGE 120/208
PHASE 3
WIRE 4
AMPS 250
AIC RATING 10K
FED FROM 4711-PP0006

CK1	PH	FRAME & AMPS	LOAD DESCRIPTION	KVA LOAD a∅	b∅	c∅	CK1	PH	FRAME & AMPS	LOAD DESCRIPTION	KVA LOAD a∅	b∅	c∅
1	A	20A/1P	LIGHTS IN E-176				2	A	30A/2P	EQUIPMENT IN E-177			
3	B	20A/1P	LIGHTS IN E-176A				4	B	-	-			
5	C	20A/1P	LIGHTS IN E-176				6	C	30A/1P	RECEPT IN E-177			
7	A	20A/1P	RECEPT IN E-176				8	A	20A/2P	20 AMP RECEPT E-176			
9	B	20A/1P	RECEPT IN E-177				10	B	-	-			
11	C	20A/1P	RECEPT IN E-176				12	C	30A/2P	EQUIPMENT IN E-177			
13	A	20A/1P	RECEPT IN E-177				14	A	-	-			
15	B	20A/1P	RECEPT ALONG WALL				16	B	20A/2P	MACHINE #6			
17	C	20A/1P	RECEPT IN E-176				18	C	30A/2P	SOLAR SIMULATOR			
19	A	20A/1P	RECEPT IN E-176				20	A	-	-			
21	B	20A/1P	RECEPT IN E-177				22	B	30A/2P	EQUIPMENT IN E-177			
23	C	20A/1P	MACHINE #7				24	C	-	-			
25	A	20A/1P	PLUGMOLD E-176				26	A	20A/1P	MACHINE #5			
27	B	20A/1P	PLUGMOLD E-176				28	B	20A/1P	MACHINE #2			
29	C	20A/1P	PLUGMOLD E-176				30	C	20A/1P	MACHINE #1			
31	A	20A/3P	4711-SS0059				32	A	20A/1P	MACHINE #3			
33	B	-	-				34	B	20A/1P	MACHINE #4			
35	C	-	-				36	C	20A/1P	MACHINE #8			
37	A	20A/2P					38	A	100A/3P	4711-RP0017			
39	B						40	B	-	-			
41	C	-	SPACE				42	C	-	-			
SUB TOTAL							SUB TOTAL						

CONNECTED LOAD
A ∅: 0 KVA : _____AMPS
B ∅: 0 KVA : _____AMPS
C ∅: 0 KVA : _____AMPS

ALL BUS SHALL BE 1000 APSI COPPER

ISOLATED GROUND BUS [ ]
NEUTRAL BUS [✓]
GROUND BUS [✓]
SUB FEED BUS [ ]

ELECTRICAL PANEL SCHEDULE (TO REMAIN) [2]

PANEL 4711-RP0017 (4711-PNL0017)
LOCATION OUTSIDE RM. E176
MOUNTING SURFACE
MFR./TYPE SIEMENS
MAIN BKR MLO
MAIN FEEDER SIZE 4#2 & 1#8G - 1-1/2"C

VOLTAGE 120/208
PHASE 3
WIRE 4
AMPS 125
AIC RATING 10K
FED FROM 4711-RP0016

CK1	PH	FRAME & AMPS	LOAD DESCRIPTION	KVA LOAD a∅	b∅	c∅	CK1	PH	FRAME & AMPS	LOAD DESCRIPTION	KVA LOAD a∅	b∅	c∅
1		20A/3P	SPARE				2	A	-	SPACE			
3	B	-	-				4	B	-	SPACE			
5	C	-	-				6	C	30A/2P	SPARE			
7	A	30A/2P	SPARE				8	A	-	-			
9	B	-	-				10	B	30A/2P	SPARE			
11	C	30A/2P	SPARE				12	C	-	-			
13	A	-	-				14	A	30A/2P	SPARE			
15	B	30A/2P	SPARE				16	B	-	-			
17	C	-	-				18	C	30A/1P	SPARE			
19	A	30A/1P	SPARE				20	A	30A/1P	SPARE			
21	B	30A/1P	SPARE				22	B	-	SPACE			
23	C	40A/3P	SPARE				24	C	-	SPACE			
25	A	-	-				26	A	-	SPACE			
27	B	-	-				28	B	-	SPACE			
29	C	-	SPACE				30	C	30A/2P	SPARE			
31	A	-	SPACE				32	A	-	-			
33	B	30A/3P	4711-SS0066				34	B	100A/2P	SPARE			
35	C	-	-				36	C	-	-			
37	A	-	-				38	A	60A/3P	SPARE			
39	B	100A/2P	SPARE				40	B	-	-			
41	C	-	-				42	C	-	-			
SUB TOTAL							SUB TOTAL						

CONNECTED LOAD
A ∅: 0 KVA : _____AMPS
B ∅: 0 KVA : _____AMPS
C ∅: 0 KVA : _____AMPS

ALL BUS SHALL BE 1000 APSI COPPER

ISOLATED GROUND BUS [ ]
NEUTRAL BUS [✓]
GROUND BUS [✓]
SUB FEED BUS [ ]

ELECTRICAL PANEL SCHEDULE (TO REMAIN) [2]

PANEL 4711-RP0018 (4711-PNL0018)
LOCATION OUTSIDE RM. E112
MOUNTING SURFACE
MFR./TYPE SIEMENS
MAIN BKR 100A
MAIN FEEDER SIZE 4#2 & 1#8G - 1-1/4"C

VOLTAGE 120/208
PHASE 3
WIRE 4
AMPS 100
AIC RATING 10K
FED FROM 4711-RP0022

CK1	PH	FRAME & AMPS	LOAD DESCRIPTION	KVA LOAD a∅	b∅	c∅	CK1	PH	FRAME & AMPS	LOAD DESCRIPTION	KVA LOAD a∅	b∅	c∅
1	A	20A/1P	SPARE				2	A	30A/1P	RM E112A			
3	B	30A/2P	OVEN				4	B	30A/1P	RM E112A			
5	C	-	-				6	C	30A/1P	RM E112A			
7	A	30A/3P	4711-SS0172				8	A	-	SPACE			
9	B	-	-				10	B	30A/3P	4711-SS0173			
11	C	-	-				12	C	-	-			
13	A	20A/2P	LINBERG OVEN BLUE				14	A	-	-			
15	B	-	-				16	B	20A/1P	FUME HOOD REC/LIGHT E111			
17	C	30A/2P	SPARE				18	C	20A/1P	MOTOR STR SWITCH FUME 112			
19	A	-	-				20	A	20A/1P	FUME RE/OLIGHT RM E112			
21	B	60A/3P	LASER RM 112A				22	B	20A/1P	MOTOR STR SWITCH FUME 111			
23	C	-	VIA 4711-CBP0011				24	C	60A/3P	LASER RM. 112A			
25	A	-	-				26	A	-	VIA 4711-CBP0012			
27	B	-	SPACE				28	B	-	-			
29	C	-	SPACE				30	C	-	SPACE			
SUB TOTAL							SUB TOTAL						

CONNECTED LOAD
A ∅: 0 KVA : _____AMPS
B ∅: 0 KVA : _____AMPS
C ∅: 0 KVA : _____AMPS

ALL BUS SHALL BE 1000 APSI COPPER

ISOLATED GROUND BUS [ ]
NEUTRAL BUS [✓]
GROUND BUS [✓]
SUB FEED BUS [ ]

ELECTRICAL PANEL SCHEDULE (TO REMAIN) [2]

PANEL 4711-RP0019 (4711-PNL0019)
LOCATION OUTSIDE RM. E112
MOUNTING SURFACE
MFR./TYPE SIEMENS
MAIN BKR 100A
MAIN FEEDER SIZE 3#3, 1#8G - 1-1/4"C

VOLTAGE 120/240
PHASE 1
WIRE 3
AMPS 100
AIC RATING 10K
FED FROM 4711-PP0007 VIA 4711-XFMR0028

CK1	PH	FRAME & AMPS	LOAD DESCRIPTION	KVA LOAD a∅	b∅	CK1	PH	FRAME & AMPS	LOAD DESCRIPTION	KVA LOAD a∅	b∅
1	A	30A/2P	RECEPTACLE RM. E112A			2	A	30A/2P	REC PLUG MOLD E112		
3	B	-	-			4	B	-	-		
5	A	30A/2P	SPARE			6	A	30A/2P	SPARE		
7	B	-	-			8	B	-	-		
9	A	30A/2P	RECEPTACLE E112			10	A	30A/2P	SPARE		
11	B	-	-			12	B	-	-		
13	A	20A/1P	POWER POLE RM. E112A			14	A	20A/1P	REC PLUG MOLD W/WALL E112		
15	B	20A/1P	POWER POLE RM. E112A			16	B	20A/1P	REC PLUG MOLD W/WALL E112		
17	A	20A/1P	POWER POLE RM. E112A			18	A	20A/1P	REC PLUG MOLD E112		
19	B	20A/1P	POWER POLE RM. E112A			20	B	20A/1P	REC PLUG MOLD W/WALL E112		
21	A	20A/1P	ACTUATOR POWER			22	A	20A/1P	REC PLUG MOLD W/WALL E112		
23	B	20A/2P	REC 111B			24	B	20A/1P	REC PLUG MOLD W/WALL E112		
25	A	-	-			26	A	20A/1P	SPARE		
27	B	20A/1P	SPARE			28	B	20A/1P	GFCI W/WALL E112		
29	A	20A/1P	SPARE			30	A	20A/1P	GFCI W/WALL E112		
31	B	20A/1P	REC PLUG MOLD E/WALL E112			32	B	20A/1P	SPARE		
33	A	20A/1P	SPARE			34	A	30A/2P	SPARE		
35	B	20A/1P	SPARE			36	B	-	-		
37	A	20A/1P	SPARE			38	A	20A/1P	SPARE		
39	B	-	SPACE			40	B	20A/1P	SPARE		
41	A	-	SPACE			42	A	-	SPACE		
SUB TOTAL						SUB TOTAL					

CONNECTED LOAD
A ∅: 0 KVA : _____AMPS
B ∅: 0 KVA : _____AMPS
C ∅: 0 KVA : _____AMPS

ALL BUS SHALL BE 1000 APSI COPPER

ISOLATED GROUND BUS [ ]
NEUTRAL BUS [✓]
GROUND BUS [✓]
SUB FEED BUS [ ]

ELECTRICAL PANEL SCHEDULE (TO REMAIN) [2]

PANEL 4711-RP0020 (4711-PNL0020)
LOCATION OUTSIDE RM. E112
MOUNTING SURFACE
MFR./TYPE SIEMENS
MAIN BKR MLO
MAIN FEEDER SIZE 4#3/0, 1#6G - 2"C

VOLTAGE 120/208
PHASE 3
WIRE 4
AMPS 225
AIC RATING 10K
FED FROM 4711-PP0007

CK1	PH	FRAME & AMPS	LOAD DESCRIPTION	KVA LOAD a∅	b∅	c∅	CK1	PH	FRAME & AMPS	LOAD DESCRIPTION	KVA LOAD a∅	b∅	c∅
1	A	20A/1P	LTS IN E114				2	A	20A/1P	REC N/WALL E115			
3	B	20A/1P	PLUG MOLD W/WALL E114				4	B	30A/1P	REC E114A			
5	C	20A/1P	LASER SHUNT TRIP POWER				6	C	-	SPACE			
7	A	30A/2P	208V REC W/WALL				8	A	30A/2P	SPARE			
9	B	-	-				10	B	-	-			
11	C	30A/2P	SPARE				12	C	90A/3P	BLACK BODY			
13	A	-	-				14	A	-	VIA 4711-SS0175			
15	B	40A/3P	4711-SS0166				16	B	-	-			
17	C	-	-				18	C	60A/2P	LASER E114D			
19	A	-	-				20	A	-	VIA 4711-CBP0015			
21	B	30A/3P	SPLIT CHILLER RM E114A				22	B	60A/2P	LASER E114D			
23	C	-	VIA 4711-SS0174				24	C	-	VIA 4711-CBP0014			
25	A	-	-				26	A	15A/3P	SPARE			
27	B	50A/2P	LASER C02 RM E112A				28	B	-	-			
29	C		VIA 4711-CBP0013				30	C					
SUB TOTAL							SUB TOTAL						

CONNECTED LOAD
A ∅: 0 KVA : _____AMPS
B ∅: 0 KVA : _____AMPS
C ∅: 0 KVA : _____AMPS

ALL BUS SHALL BE 1000 APSI COPPER

ISOLATED GROUND BUS [ ]
NEUTRAL BUS [✓]
GROUND BUS [✓]
SUB FEED BUS [ ]

ELECTRICAL PANEL SCHEDULE (TO REMAIN) [4]

PANEL 4711-RP0021 (4711-PNL0021)
LOCATION OUTSIDE RM. E113
MOUNTING FLUSH
MFR./TYPE SIEMENS
MAIN BKR MLO
MAIN FEEDER SIZE 4#3/0, 1#6G - 2"C

VOLTAGE 120/208
PHASE 3
WIRE 4
AMPS 225
AIC RATING 10K
FED FROM 4711-PP0007

*** REPLACE EXISTING CIRCUIT BREAKER WITH NEW 100A/3P**

CK1	PH	FRAME & AMPS	LOAD DESCRIPTION	KVA LOAD a∅	b∅	c∅	CK1	PH	FRAME & AMPS	LOAD DESCRIPTION	KVA LOAD a∅	b∅	c∅
1	A	20A/1P	E111B REC EAST WALL				2	A	20A/1P	REC RM E114A			
3	B	30A/1P	E111B PLUGMOLD E/WALL				4	B	80A/2P	4711-CBP0009			
5	C	20A/1P	E111B PLUGMOLD E/WALL				6	C	-	-			
7	A	30A/2P	E113 W/WALL 208 PLUG				8	A	80A/2P	4711-CBP0007			
9	B	-	-				10	B	-	-			
11		20A/2P	REC RM. 114A				12	C	30A/2P	RECEPTACLE			
13	A	-	-				14	A	-	-			
15	B	20A/1P	REC E115 W/WALL				16	B	-	-			
17	C	20A/2P	E115 RECEPTACLE				18	C	20A/1P	PLUGMOLD W/WALL E115			
19	A	-	-				20	A	40A/2P	SPARE			
21	B	20A/1P	E110A FLR PLUG TELE CON				22	B	-	-			
23	C	20A/1P	E110A PROJECTOR SCREEN				24	C	30A/2P	REC RM 111B			
25	A	20A/1P	E110A FLR PLUG TABLE				26	A	-	-			
27	B	***100A/3P**	4711-RP0027				28	B	30A/2P	SPARE			
29	C	-	-				30	C	-	-			
31	A	-	-				32	A	50A/2P	MEGA PURE SYSTEM E112			
33	B	-	SPACE				34	B	-	-			
35	C	-	SPACE				36	C	-	SPACE			
37	A	-	SPACE				38	A	-	SPACE			
39	B	-	SPACE				40	B	-	SPACE			
41	C	-	SPACE				42	C	-	SPACE			
SUB TOTAL							SUB TOTAL						

CONNECTED LOAD
A ∅: 0 KVA : _____AMPS
B ∅: 0 KVA : _____AMPS
C ∅: 0 KVA : _____AMPS

ALL BUS SHALL BE 1000 APSI COPPER

ISOLATED GROUND BUS [ ]
NEUTRAL BUS [✓]
GROUND BUS [✓]
SUB FEED BUS [ ]

PLAN NOTES

1. REPLACE EXISTING PANEL WITH NEW PANEL AS SHOWN.
2. EXISTING PANEL TO REMAIN, NO WORK AT THIS TIME.
3. NOT USED.
4. EXISTING PANEL TO REMAIN, MAKE MODIFICATIONS AS NOTED.

MAXIMO # 4711-RP0013 (4711-PNL0013)	MAXIMO # 4711-RP0014 (4711-PNL0014)	MAXIMO # 4711-RP0015 (4711-PNL0015)
MAXIMO # 4711-RP0016 (4711-PNL0016)	MAXIMO # 4711-RP0017 (4711-PNL0017)	MAXIMO # 4711-RP0018 (4711-PNL0018)
MAXIMO # 4711-RP0019 (4711-PNL0019)	MAXIMO # 4711-RP0020 (4711-PNL0020)	MAXIMO # 4711-RP0021 (4711-PNL0021)

SCHEDULE PLAN

NOT TO SCALE

WARNING
DO NOT SCALE THIS DRAWING
THIS DRAWING WAS DESIGNED TO BE PRINTED AT A NASA SHEET SIZE: MSFC STD. SIZE 40" X 28"

LAPAMA REGISTERED No. 26967 PROFESSIONAL 9/4/15 ENGINEER JOHN AVERRETT

REV	BY	DATE	REVISION	C.I. NO.	APPROVED

Marshall Space Flight Center
Huntsville, Alabama 35812

BUILDING 4711
REVITALIZE ELECTRICAL SYSTEMS

PANEL SCHEDULES

AE FIRM: GOODWYN MILLS CAWOOD / MERRICK & COMPANY — JOINT VENTURE

NASA AE CONTRACT NO. NNM12AA49C NNM14AA72T

SUBMITTED: JENNIFER LANDRY
AE: DATE: 09/15/15
DESIGNED S. CRITTENDEN
DRAWN M. PATE
CHECKED J. AVERRETT
SCALE: AS SHOWN

APPROVAL RECOMMENDED: CODY GOODMAN, AS22 PROJECT A/E
APPROVAL RECOMMENDED: TIM DOSS, AS22 SUPPORT A/E
APPROVAL RECOMMENDED: PHIL HENDRIX, AS22 TEAM LEAD
SPEC. NO. FAC-M5063

APPROVED: NELSON OLINGER, AS22 GROUP LEAD DATE: 09/15/15

DRAWING NO. FAC-CU-4711-E703
SHEET 29 OF 38

FINAL SUBMITTAL
ISSUED FOR CONSTRUCTION
REF. NO. E703

Master Bid Disk 10-06-2015

A | B | C | D | E | F | G

ELECTRICAL PANEL SCHEDULE (TO REMAIN) [2]

PANEL 4711-RP0022 (4711-PNL0022)
LOCATION OUTSIDE RM. E113
MOUNTING FLUSH
MFR./TYPE SIEMENS
MAIN BKR MLO
MAIN FEEDER SIZE 4#3/0, 1#6G - 2"C

VOLTAGE 120/208
PHASE 3
WIRE 4
AMPS 225
AIC RATING 10K
FED FROM 4711-PP0007

CK1	PH	FRAME & AMPS	LOAD DESCRIPTION	KVA LOAD a∅	b∅	c∅	CK1	PH	FRAME & AMPS	LOAD DESCRIPTION	KVA LOAD a∅	b∅	c∅
1	A	60A/3P	ARC MELTER				2	A	15A/3P	CRU 0001			
3	B	-	-				4	B	-	-			
5	C	-	-				6	C	-	-			
7	A	-	SPACE				8	A	15A/3P	CRU 0002			
9	B	-	SPACE				10	B	-	-			
11	C	-	SPACE				12	C	-	-			
13	A	50A/2P	REC RM E112A				14	A	20A/1P	GFCI REC RM E114D			
15	B	-	-				16	B	20A/1P	GFCI REC RM E114D			
17	C	30A/2P	SPARE				18	C	-	SPACE			
19	A	-	-				20	A	100A/3P	4711-RP0018			
21	B	90A/3P	SPARE				22	B	-	-			
23	C	-	-				24	C					
25	A	-	-				26	A	40A/3P	SPARE			
27	B	40A/3P	SPARE				28	B	-	-			
29	C	-	-				30	C	-	-			
31	A	-	-				32	A	30A/3P	4711-SS0171			
33	B	40A/3P	SPARE				34	B	-	-			
35	C	-	-				36	C	-	-			
37	A	-	-				38	A	-	SPACE			
39	B	-	SPACE				40	B	-	SPACE			
41	C	-	SPACE				42	C	-	SPACE			
SUB TOTAL							SUB TOTAL						

CONNECTED LOAD
A ∅ : 0 KVA : _____AMPS
B ∅ : 0 KVA : _____AMPS
C ∅ : 0 KVA : _____AMPS

ALL BUS SHALL BE 1000 APSI COPPER

ISOLATED GROUND BUS [ ]
NEUTRAL BUS [✓]
GROUND BUS [✓]
SUB FEED BUS [ ]

ELECTRICAL PANEL SCHEDULE (TO REMAIN) [2]

PANEL 4711-RP0023 (4711-PNL0023)
LOCATION OUTSIDE RM. E113
MOUNTING FLUSH
MFR./TYPE SIEMENS
MAIN BKR MLO
MAIN FEEDER SIZE 4#3, 1#8G - 1-1/4"C

VOLTAGE 120/208
PHASE 3
WIRE 4
AMPS 250
AIC RATING 10K
FED FROM 4711-PP0007

CK1	PH	FRAME & AMPS	LOAD DESCRIPTION	KVA LOAD a∅	b∅	c∅	CK1	PH	FRAME & AMPS	LOAD DESCRIPTION	KVA LOAD a∅	b∅	c∅
1	A	20A/1P	REC E/WALL RM E115				2	A	20A/1P	REC W/WALL E115, E113			
3	B	20A/1P	REC RM E118				4	B	20A/1P	EWS REC RM E116			
5	C	20A/1P	REC N/WALL RM E120				6	C	20A/1P	HW CIR PUMP			
7	A	20A/1P	REC RM E120				8	A	20A/1P	REC N/WALL RM E111B			
9	B	20A/1P	REC E/WALL E111B, E111				10	B	20A/1P	SPARE			
11	C	20A/1P	REC N/WALL RM E113				12	C	20A/1P	SPARE			
13	A	20A/1P	ROLLUP DOOR E118				14	A	20A/1P	REC N/WALL			
15	B	30A/1P	SPARE				16	B	20A/1P	REC NEW			
17	C	20A/1P	WATER COOLER HALL				18	C	20A/1P	REC HALLWAY			
19	A	20A/1P	SPARE				20	A	20A/1P	SPARE			
21	B	20A/1P	REC S/WALL RM E113				22	B	20A/1P	REC N/WALL E115			
23	C	20A/1P	ABANDONED W/WALL E1				24	C	20A/1P	REC RM 110A			
25	A	20A/1P	REC PLUGMOLD W/WALL				26	A	-	SPACE			
27	B	20A/1P	REC PLUGMOLD W/WALL				28	B	-	SPACE			
29	C	20A/1P	REC PLUGMOLD W/WALL				30	C	-	SPACE			
31	A	20A/1P	REC HALLWAY				32	A	-	SPACE			
33	B	20A/1P	REC E/WALL E113A N/WALL				34	B	20A/1P	REC S/WALL E113			
35	C	20A/1P	REC HALLWAY				36	C	20A/1P				
37	A	20A/1P	SPARE				38	A	30A/2P				
39	B	20A/1P	REC W/WALL E114				40	B	-	-			
41	C	-	SPACE				42	C	-	SPACE			
SUB TOTAL							SUB TOTAL						

CONNECTED LOAD
A ∅ : 0 KVA : _____AMPS
B ∅ : 0 KVA : _____AMPS
C ∅ : 0 KVA : _____AMPS

ALL BUS SHALL BE 1000 APSI COPPER

ISOLATED GROUND BUS [ ]
NEUTRAL BUS [✓]
GROUND BUS [✓]
SUB FEED BUS [ ]

ELECTRICAL PANEL SCHEDULE (TO REMAIN) [2]

PANEL 4711-RP0024 (4711-PNL0024)
LOCATION OUTSIDE RM. E113
MOUNTING FLUSH
MFR./TYPE SIEMENS
MAIN BKR MLO
MAIN FEEDER SIZE 4#3/0, 1#6G - 2"C

VOLTAGE 120/208
PHASE 3
WIRE 4
AMPS 250
AIC RATING 10K
FED FROM 4711-PP0007

CK1	PH	FRAME & AMPS	LOAD DESCRIPTION	KVA LOAD a∅	b∅	c∅	CK1	PH	FRAME & AMPS	LOAD DESCRIPTION	KVA LOAD a∅	b∅	c∅
1	A	20A/1P	E110 LTS				2	A	20A/1P	E110B LTS			
3	B	20A/1P	E110 PLUG W/WALL				4	B	20A/1P	RECESS LTS 110A			
5	C	20A/1P	E112 LTS				6	C	20A/1P	E110A LTS			
7	A	20A/1P	SPARE				8	A	20A/1P	E112 EMER EXHAUST			
9	B	20A/1P	E112 LTS				10	B	20A/1P	SPARE			
11	C	20A/1P	E114 LTS				12	C	20A/1P	E114 LTS			
13	A	20A/1P	E113 LTS				14	A	20A/1P	E113 LTS			
15	B	20A/1P	SPARE				16	B	20A/1P	E118 LTS & EMLT			
17	C	20A/1P	E115 LTS				18	C	20A/1P	E115 LTS			
19	A	20A/1P	E111A LTS				20	A	20A/1P	E111B LTS			
21	B	20A/1P	E111 LTS				22	B	20A/1P	E113A LTS			
23	C	20A/1P	HALL LTS				24	C	20A/1P	E114B LTS			
25	A	20A/1P	SPARE				26	A	20A/1P	SPARE			
27	B	20A/1P	SPARE				28	B	-	SPACE			
29	C	20A/1P	SPARE				30	C	-	SPACE			
31	A	20A/1P	E114 PLUG E/WALL				32	A	-	SPACE			
33	B	-	SPACE				34	B	-	SPACE			
35	B	C	-	SPACE			36	C	20A/1P	RECEPTACLE RM E115			
37	A	20A/1P	SPARE				38	A	20A/1P	02 MON			
39	B	20A/1P	E112 PLUG S/WALL				40	B	20A/1P	REC E114			
41	C	20A/1P	E112 PLUG N/WALL				42	C	20A/1P	E112 PLUG E/WALL			
SUB TOTAL							SUB TOTAL						

CONNECTED LOAD
A ∅ : 0 KVA : _____AMPS
B ∅ : 0 KVA : _____AMPS
C ∅ : 0 KVA : _____AMPS

ALL BUS SHALL BE 1000 APSI COPPER

ISOLATED GROUND BUS [ ]
NEUTRAL BUS [✓]
GROUND BUS [✓]
SUB FEED BUS [ ]

PLAN NOTES

1. REPLACE EXISTING PANEL WITH NEW PANEL AS SHOWN.
2. EXISTING PANEL TO REMAIN, NO WORK AT THIS TIME.
3. NOT USED.

ELECTRICAL PANEL SCHEDULE (TO BE REPLACED) [1]

PANEL 4711-RP0025 (4711-PNL0025)
LOCATION RM. E114
MOUNTING SURFACE
MFR./TYPE SQUARE D
MAIN BKR 100A
MAIN FEEDER SIZE 4#3 & 1#4G - 1-1/4"C

VOLTAGE 120/208
PHASE 3
WIRE 4
AMPS 200
AIC RATING 10K
FED FROM 4711-PP0007 V/A 4711-XFMR0004

CK1	PH	FRAME & AMPS	LOAD DESCRIPTION	KVA LOAD a∅	b∅	c∅	CK1	PH	FRAME & AMPS	LOAD DESCRIPTION	KVA LOAD a∅	b∅	c∅
1	A	20A/3P	SPARE				2	A	20A/1P	SPARE			
3	B	-	-				4	B	20A/1P	SPARE			
5	C	-	-				6	C	20A/1P	SPARE			
7	A	20A/3P	DRILL PRESS				8	A	20A/2P				
9	B	-	-				10	B	-				
11	C		-				12	C	20A/1P	PLUG MOLD			
13	A	30A/1P	HEAT SEALER				14	A	20A/1P	PLUG MOLD			
15	B	20A/1P	GEI BY SPLIT CHILLER				16	B	20A/1P	PLUG MOLD			
17	C	20A/1P	SPARE				18	C	20A/1P	PLUG MOLD			
19	A	20A/1P	RECEPTACLE				20	A	20A/1P	PLUG MOLD			
21	B	20A/1P	RECEPTACLE				22	B	20A/1P	RECEPTACLE			
23	C	20A/1P	SURE FLOW SENSOR				24	C	20A/1P	RECEPTACLE			
25	A	20A/1P	SPARE				26	A	20A/1P	SPARE			
27	B	20A/1P	SPARE				28	B	20A/1P	SPARE			
29	C	20A/1P	SPARE				30	C	20A/1P	SPARE			
SUB TOTAL							SUB TOTAL						

CONNECTED LOAD
A ∅ : 0 KVA : _____AMPS
B ∅ : 0 KVA : _____AMPS
C ∅ : 0 KVA : _____AMPS

ALL BUS SHALL BE 1000 APSI COPPER

ISOLATED GROUND BUS [ ]
NEUTRAL BUS [✓]
GROUND BUS [✓]
SUB FEED BUS [ ]

ELECTRICAL PANEL SCHEDULE (TO BE REPLACED) [1]

PANEL 4711-RP0027 (4711-PNL0027)
LOCATION RM. E113A
MOUNTING SURFACE
MFR./TYPE SQUARE D
MAIN BKR 100A
MAIN FEEDER SIZE 4#3, 1#8G - 1-1/4"C

VOLTAGE 120/208
PHASE 3
WIRE 4
AMPS 200
AIC RATING 10K
FED FROM 4711-RP0021

CK1	PH	FRAME & AMPS	LOAD DESCRIPTION	KVA LOAD a∅	b∅	c∅	CK1	PH	FRAME & AMPS	LOAD DESCRIPTION	KVA LOAD a∅	b∅	c∅
1	A	20A/2P	220V RECEP. E. WALL				2	A	20A/1P	RECEP. E. WALL			
3	B	-					4	B	20A/1P	RECEP. E. WALL			
5	C	20A/2P	LOW VOLTAGE XFMR				6	C	20A/1P	RECEP. E. WALL			
7	A	-	-				8	A	20A/1P	RECEP. E. WALL			
9	B	20A/2P	SPARE				10	B	20A/2P	SPARE			
11	C	-	-				12	C	-	-			
13	A	20A/2P	SPARE				14	A	20A/1P	SPARE			
15	B	-	-				16	B	20A/1P	SPARE			
17	C	20A/1P	SPARE				18	C	20A/1P	SPARE			
19	A	20A/1P	SPARE				20	A	20A/1P	SPARE			
21	B	20A/1P	SPARE				22	B	20A/1P	SPARE			
23	C	20A/1P	SPARE				24	C	20A/1P	SPARE			
25	A	20A/1P	SPARE				26	A	20A/1P	SPARE			
27	B	20A/1P	SPARE				28	B	20A/1P	SPARE			
29	C	20A/1P	SPARE				30	C	20A/1P	SPARE			
SUB TOTAL							SUB TOTAL						

CONNECTED LOAD
A ∅ : 0 KVA : _____AMPS
B ∅ : 0 KVA : _____AMPS
C ∅ : 0 KVA : _____AMPS

ALL BUS SHALL BE 1000 APSI COPPER

ISOLATED GROUND BUS [ ]
NEUTRAL BUS [✓]
GROUND BUS [✓]
SUB FEED BUS [ ]

ELECTRICAL PANEL SCHEDULE (TO BE REPLACED) [1]

PANEL 4711-RP0028 (4711-PNL0028)
LOCATION RM. E179
MOUNTING SURFACE
MFR./TYPE SQUARE D
MAIN BKR 100A
MAIN FEEDER SIZE 4#3, 1#8G - 1-1/4"C

VOLTAGE 120/208
PHASE 3
WIRE 4
AMPS 200
AIC RATING 10K
FED FROM 4711-BDP05AA

CK1	PH	FRAME & AMPS	LOAD DESCRIPTION	KVA LOAD a∅	b∅	c∅	CK1	PH	FRAME & AMPS	LOAD DESCRIPTION	KVA LOAD a∅	b∅	c∅
1	A	15A/1P	#10				2	A	30A/1P	RECEPTACLE			
3	B	20A/1P	#9				4	B	20A/3P	EXHAUST FAN ROOF			
5	C	20A/1P	#8				6	C		V/A 4711-STRT0007			
7	A	20A/1P	#7				8	A	-	-			
9	B	20A/1P	#6				10	B	20A/3P	EXHAUST FAN ROOF			
11	C	15A/1P					12	C	-	V/A 4711-STRT0008			
13	A	20A/1P	1557 CONTROLLER				14	A	-	-			
15	B	20A/1P	-				16	B	20A/3P	A/C PUMP MOTOR			
17	C	20A/1P	RECEPTACLE				18	C	-	V/A 4711-STRT0009			
19	A	15A/1P	VALVE CONTROL				20	A	-	-			
21	B	20A/1P	SPARE				22	B	20A/3P	SPARE			
23	C	20A/1P	SPARE				24	C	-	-			
25	A	20A/1P	SPARE				26	A	-	-			
27	B	20A/1P	SPARE				28	B	20A/1P	SPARE			
29	C	20A/1P	SPARE				30	C	20A/1P	SPARE			
SUB TOTAL							SUB TOTAL						

CONNECTED LOAD
A ∅ : 0 KVA : _____AMPS
B ∅ : 0 KVA : _____AMPS
C ∅ : 0 KVA : _____AMPS

ALL BUS SHALL BE 1000 APSI COPPER

ISOLATED GROUND BUS [ ]
NEUTRAL BUS [✓]
GROUND BUS [✓]
SUB FEED BUS [ ]

MAXIMO # 4711-RP0022 (4711-PNL0022)	MAXIMO # 4711-RP0023 (4711-PNL0023)	MAXIMO # 4711-RP0024 (4711-PNL0024)
MAXIMO # 4711-RP0025 (4711-PNL0025)	MAXIMO # 4711-RP0027 (4711-PNL0027)	MAXIMO # 4711-RP0028 (4711-PNL0028)
MAXIMO # 4711-RP0031 (4711-PNL0031)	MAXIMO # 4711-RP0032 (4711-PNL0032)	

SCHEDULE PLAN

NOT TO SCALE

ELECTRICAL PANEL SCHEDULE (TO REMAIN) [2]

PANEL 4711-RP0031 (4711-PNL0031)
LOCATION OUTSIDE RM. W175A
MOUNTING SURFACE
MFR./TYPE SIEMENS
MAIN BKR MLO
MAIN FEEDER SIZE 4#3/0 & 1#6G - 2"C

VOLTAGE 120/208
PHASE 3
WIRE 4
AMPS 250
AIC RATING 10K
FED FROM 4711-PP0006

CK1	PH	FRAME & AMPS	LOAD DESCRIPTION	KVA LOAD a∅	b∅	c∅	CK1	PH	FRAME & AMPS	LOAD DESCRIPTION	KVA LOAD a∅	b∅	c∅
1	A	20A/1P	LIGHTS				2	A	20A/1P	LIGHTS			
3	B	20A/1P	LIGHTS				4	B	20A/1P	LIGHTS			
5	C	20A/1P	LIGHTS				6	C	20A/1P	LIGHTS			
7	A	20A/1P	LIGHTS				8	A	20A/1P	EMERGENCY LIGHTS			
9	B	20A/1P	LIGHTS				10	B	20A/1P	EMERGENCY LIGHTS			
11	C	20A/1P	LIGHTS				12	C	20A/1P	EMERGENCY LIGHTS			
13	A	20A/1P	LIGHTS				14	A	20A/1P	LIGHTS			
15	B	20A/1P	EMERGENCY LIGHTS				16	B	20A/1P	LIGHTS			
17	C	20A/1P	EMERGENCY LIGHTS				18	C	20A/1P	LIGHTS			
19	A	20A/1P	LIGHTS				20	A	20A/1P	LIGHTS			
21	B	20A/1P	LIGHTS				22	B	20A/1P	LIGHTS			
23	C	20A/1P	LIGHTS				24	C	20A/1P	LIGHTS			
25	A	20A/1P	LIGHTS				26	A	20A/1P	LIGHTS			
27	B	20A/1P	LIGHTS				28	B	20A/1P	LIGHTS			
29	C	20A/1P	LIGHTS				30	C	20A/1P	LIGHTS			
31	A	20A/1P	LIGHTS				32	A	20A/1P	LIGHTS			
33	B	20A/1P	LIGHTS				34	B	20A/1P	LIGHTS			
35	C	20A/1P	LIGHTS				36	C	20A/1P	LIGHTS			
37	A	30A/2P	LIGHTS				38	A	30A/2P				
39	B	-	-				40	B	-				
41	C	-	SPACE				42	C	-	BLANK			
SUB TOTAL							SUB TOTAL						

CONNECTED LOAD
A ∅ : 0 KVA : _____AMPS
B ∅ : 0 KVA : _____AMPS
C ∅ : 0 KVA : _____AMPS

ALL BUS SHALL BE 1000 APSI COPPER

ISOLATED GROUND BUS [ ]
NEUTRAL BUS [✓]
GROUND BUS [✓]
SUB FEED BUS [ ]

ELECTRICAL PANEL SCHEDULE (TO BE REPLACED) [1]

PANEL 4711-RP0032 (4711-PNL0032)
LOCATION RM. E179B
MOUNTING SURFACE
MFR./TYPE SQUARE D
MAIN BKR 100A
MAIN FEEDER SIZE 4#3, 1#8G - 1-1/4"C

VOLTAGE 120/208
PHASE 3
WIRE 4
AMPS 200
AIC RATING 10K
FED FROM 4711-RP0037

CK1	PH	FRAME & AMPS	LOAD DESCRIPTION	KVA LOAD a∅	b∅	c∅	CK1	PH	FRAME & AMPS	LOAD DESCRIPTION	KVA LOAD a∅	b∅	c∅
1	A	30A/1P	SPARE				2	A	20A/1P	SPARE			
3	B	20A/1P	OXYGEN				4	B	20A/3P	SPARE			
5	C	20A/1P	SPARE				6	C	-	-			
7	A	20A/1P	SPARE				8	A	-	-			
9	B	20A/1P	SPARE				10	B	20A/1P	SPARE			
11	C	20A/1P	SPARE				12	C	20A/1P	SPARE			
13	A	20A/1P	SPARE				14	A	20A/1P	SPARE			
15	B	20A/1P	SPARE				16	B	20A/1P	SPARE			
17	C	20A/1P	SPARE				18	C	20A/1P	SPARE			
19	A	20A/1P	SPARE				20	A	20A/1P	SPARE			
21	B	20A/1P	SPARE				22	B	20A/1P	SPARE			
23	C	20A/1P	SPARE				24	C	20A/1P	SPARE			
25	A	20A/1P	SPARE				26	A	20A/1P	SPARE			
27	B	20A/1P	SPARE				28	B	20A/1P	SPARE			
29	C	20A/1P	SPARE				30	C	20A/1P	SPARE			
SUB TOTAL							SUB TOTAL						

CONNECTED LOAD
A ∅ : 0 KVA : _____AMPS
B ∅ : 0 KVA : _____AMPS
C ∅ : 0 KVA : _____AMPS

ALL BUS SHALL BE 1000 APSI COPPER

ISOLATED GROUND BUS [ ]
NEUTRAL BUS [✓]
GROUND BUS [✓]
SUB FEED BUS [ ]

WARNING
DO NOT SCALE THIS DRAWING
THIS DRAWING WAS DESIGNED TO BE PRINTED AT A NASA SHEET SIZE: MSFC STD. SIZE 40" X 28"

ALABAMA REGISTERED No. 26967 PROFESSIONAL ENGINEER JOHN AVERRETT 9/4/15

REV	BY	DATE	REVISION	C.I. NO.	APPROVED

Marshall Space Flight Center
Huntsville, Alabama 35812

BUILDING 4711
REVITALIZE ELECTRICAL SYSTEMS

PANEL SCHEDULES

AE FIRM: GOODWYN MILLS CAWOOD / MERRICK & COMPANY — JOINT VENTURE

NASA AE CONTRACT NO. NNM12AA49C NNM14AA72T

SUBMITTED: JENNIFER LANDRY
AE: DATE: 09/15/15
DESIGNED S. CRITTENDEN
DRAWN M. PATE
CHECKED J. AVERRETT
SCALE: AS SHOWN

APPROVAL RECOMMENDED: CODY GOODMAN, AS22 PROJECT A/E
APPROVAL RECOMMENDED: TIM DOSS, AS22 SUPPORT A/E
APPROVAL RECOMMENDED: PHIL HENDRIX, AS22 TEAM LEAD
SPEC. NO. FAC-M5063

APPROVED: NELSON OLINGER, AS22 GROUP LEAD DATE: 09/15/15

DRAWING NO. FAC-CU-4711-E704
SHEET 30 OF 38

FINAL SUBMITTAL
ISSUED FOR CONSTRUCTION
REF. NO. E704

Master Bid Disk 10-06-2015

A | B | C | D | E | F | G

ELECTRICAL PANEL SCHEDULE (TO BE REPLACED) [1]

PANEL 4711-RP0033 (4711-PNL0033)
LOCATION RM. E179B
MOUNTING FLUSH
MFR./TYPE SQUARE D
MAIN BKR 225A
MAIN FEEDER SIZE 4#4/0, 1#4G - 2-1/2"C

VOLTAGE 120/208
PHASE 3
WIRE 4
AMPS 225
AIC RATING 10K
FED FROM 4711-PP0006

CK1	PH	FRAME & AMPS	LOAD DESCRIPTION	KVA LOAD a∅	b∅	c∅	CK1	PH	FRAME & AMPS	LOAD DESCRIPTION	KVA LOAD a∅	b∅	c∅
1	A	20A/1P	LTS E177				2	A	20A/2P	SPARE			
3	B	20A/1P	LTS E177				4	B	-	-			
5	C	20A/1P	LTS E177				6	C	30A/1P	REC E177			
7	A	20A/3P	REC E179				8	A	20A/1P	REC E177			
9	B	-	-				10	B	20A/1P	REC E177			
11	C	-	-				12	C	20A/1P	REC E177			
13	A	20A/1P	SPARE				14	A	20A/1P	SPARE			
15	B	100A/3P	4711-RP0056				16	B	20A/1P	SPARE			
17	C	-	-				18	C	20A/1P	SPARE			
19	A	-	-				20	A	20A/1P	SPARE			
21	B	30A/2P	4711-SS0058 E177				22	B	20A/2P	SPARE			
23	C	-	-				24	C	-	-			
25	A	20A/2P	E179A 4711-SS0063				26	A	30A/3P	REC E179B			
27	B	-	-				28	B	-	-			
29	C	20A/2P	SPARE				30	C	-	-			
31	A	-	-				32	A	30A/2P	REC RM 177			
33	B	20A/3P	SPARE				34	B	-	-			
35	C	-	-				36	C	30A/2P	AIR CONDITIONER			
37	A	-	-				38	A	-	-			
39	B	30A/2P	TEMP CONTROL & REC E179				40	B	20A/1P	SPARE			
41	C	-	-				42	C	20A/1P	SPARE			
SUB TOTAL							SUB TOTAL						

CONNECTED LOAD
A ∅: 0 KVA : _____AMPS
B ∅: 0 KVA : _____AMPS
C ∅: 0 KVA : _____AMPS

ALL BUS SHALL BE 1000 APSI COPPER

ISOLATED GROUND BUS [ ]
NEUTRAL BUS [✓]
GROUND BUS [✓]
SUB FEED BUS [ ]

ELECTRICAL PANEL SCHEDULE (TO BE REPLACED) [1]

PANEL 4711-RP0035 (4711-PNL0035)
LOCATION RM. E116
MOUNTING SURFACE
MFR./TYPE SQUARE D
MAIN BKR 80A
MAIN FEEDER SIZE 3#4, 1#8G - 1"C

VOLTAGE 120/240
PHASE 1
WIRE 3
AMPS 100
AIC RATING 10K
FED FROM 4711-XFMR0003

CK1	PH	FRAME & AMPS	LOAD DESCRIPTION	KVA LOAD a∅	b∅	CK1	PH	FRAME & AMPS	LOAD DESCRIPTION	KVA LOAD a∅	b∅
1	A	20A/1P	PLUG TO LEFT			2	A	40A/2P	GATE 220 & TURNSTILES		
3	B	20A/1P	SPARE			4	B	-	-		
5	A	20A/1P	SPARE			6	A	20A/1P	SPARE		
7	B	30A/2P	WATER HEATER			8	B	20A/1P	SPARE		
9	A	-	WATER HEATER			10	A	20A/1P	SPARE		
11	B	20A/1P	SPARE			12	B	20A/1P	SPARE		
13	A	20A/1P	SPARE			14	A	20A/1P	SPARE		
15	B	20A/1P	SPARE			16	B	20A/1P	SPARE		
17	A	20A/1P	SPARE			18	A	20A/1P	SPARE		
19	B	20A/1P	SPARE			20	B	20A/1P	SPARE		
21	A	20A/1P	SPARE			22	A	20A/1P	SPARE		
23	B	20A/1P	SPARE			24	B	20A/1P	SPARE		
25	A	20A/1P	SPARE			26	A	20A/1P	SPARE		
27	B	20A/1P	SPARE			28	B	20A/1P	SPARE		
29	A	20A/1P	SPARE			30	A	20A/1P	SPARE		
SUB TOTAL						SUB TOTAL					

CONNECTED LOAD
A ∅: 0 KVA : _____AMPS
B ∅: 0 KVA : _____AMPS
C ∅: 0 KVA : _____AMPS

ALL BUS SHALL BE 1000 APSI COPPER

ISOLATED GROUND BUS [ ]
NEUTRAL BUS [✓]
GROUND BUS [✓]
SUB FEED BUS [ ]

ELECTRICAL PANEL SCHEDULE (TO REMAIN) [4]

PANEL 4711-RP0037 (4711-PNL0037)
LOCATION RM. E178
MOUNTING SURFACE
MFR./TYPE SIEMENS
MAIN BKR 225A
MAIN FEEDER SIZE 4#4/0 & 1#2G - 3"C

VOLTAGE 120/208
PHASE 3
WIRE 4
AMPS 225
AIC RATING 10K
FED FROM 4711-BDP07AC
* CONTRACTOR TO CHANGE EXISTING CIRCUIT BREAKER

CK1	PH	FRAME & AMPS	LOAD DESCRIPTION	KVA LOAD a∅	b∅	c∅	CK1	PH	FRAME & AMPS	LOAD DESCRIPTION	KVA LOAD a∅	b∅	c∅
1	A	30A/2P	REC E124				2	A	20A/1P	REC RM E124			
3	B	-	-				4	B	20A/1P	SPARE			
5	C	20A/1P	REC RM E126				6	C	20A/1P	LTS RM E124 & E126			
7	A	20A/1P	REC RM E126A				8	A	20A/3P	SPARE			
9	B	20A/1P	LTS RM E126A				10	B	-	-			
11	C	20A/1P	SPARE				12	C	-	-			
13	A	20A/1P	REC @ WALL BY E179				14	A	20A/1P	AIR DRYER			
15	B	20A/1P	REC @ WALL BY E179				16	B	20A/1P	REC E179			
17	C	30A/3P	SPARE				18	C	20A/1P				
19	A	-	-				20	A	20A/1P	SPARE			
21	B	-	-				22	B	20A/1P	SPARE			
23	C	20A/1P	SPARE				24	C	40A/2P	HOT WATER HEATER E125			
25	A	20A/1P	SPARE				26	A	-	VIA 4711-SS0153			
27	B	*100A/3P	4711-RP0032				28	B	20A/1P	SPARE			
29	C	-	-				30	C	20A/1P	SPARE			
31	A	-	-				32	A	20A/1P	SPARE			
33	B	-	SPACE				34	B	-	SPACE			
35	C	-	SPACE				36	C	-	SPACE			
37	A	-	SPACE				38	A	-	SPACE			
39	B	-	SPACE				40	B	-	SPACE			
41	C	-	SPACE				42	C	-	SPACE			
SUB TOTAL							SUB TOTAL						

CONNECTED LOAD
A ∅: 0 KVA : _____AMPS
B ∅: 0 KVA : _____AMPS
C ∅: 0 KVA : _____AMPS

ALL BUS SHALL BE 1000 APSI COPPER

ISOLATED GROUND BUS [ ]
NEUTRAL BUS [✓]
GROUND BUS [✓]
SUB FEED BUS [ ]

PLAN NOTES

1. REPLACE EXISTING PANEL WITH NEW PANEL AS SHOWN.
2. EXISTING PANEL TO REMAIN, NO WORK AT THIS TIME.
3. NOT USED.
4. EXISTING PANEL TO REMAIN, CONTRACTOR TO UPDATE AS NOTED.

ELECTRICAL PANEL SCHEDULE (TO REMAIN) [2]

PANEL 4711-RP0038 (4711-PNL0038)
LOCATION OUTSIDE RM. E178
MOUNTING SURFACE
MFR./TYPE SIEMENS
MAIN BKR MLO
MAIN FEEDER SIZE 4#1, 1#6G - 1-1/2"C

VOLTAGE 120/208
PHASE 3
WIRE 4
AMPS 125
AIC RATING 10K
FED FROM 4711-BDP007Z

CK1	PH	FRAME & AMPS	LOAD DESCRIPTION	KVA LOAD a∅	b∅	c∅	CK1	PH	FRAME & AMPS	LOAD DESCRIPTION	KVA LOAD a∅	b∅	c∅
1	A	-	SPACE				2	A	-	SPACE			
3	B	20A/1P	LIGHTS N. HALF RM E130				4	B	20A/1P	RECPT RM E125			
5	C	20A/1P	RECEPTACLES				6	C	20A/1P	LTS RM E125, RECP RM E125			
7	A	20A/1P	LIGHTS RM. E127				8	A	20A/1P	RECPT RM E130, E127A			
9	B	20A/1P	RM. E122, LTS. & REC. MEN'S				10	B	20A/1P	LIGHTS RM E130A S. HALF			
11	C	20A/1P	LIGHTS RM E123				12	C	20A/1P	EX FAN RM E126B			
13	A	20A/1P	RECPT RM E125				14	A	30A/3P	SPARE			
15	B	20A/1P	RECPT RM E125 & DAMPER				16	B	-	-			
17	C	20A/1P	RECPT RM E125				18	C	-	-			
19	A	-	SPACE				20	A	-	SPACE			
21	B	-	SPACE				22	B	-	SPACE			
23	C	-	SPACE				24	C	-	SPACE			
25	A	-	SPACE				26	A	-	SPACE			
27	B	-	SPACE				28	B	-	SPACE			
29	C	-	SPACE				30	C	-	SPACE			
SUB TOTAL							SUB TOTAL						

CONNECTED LOAD
A ∅: 0 KVA : _____AMPS
B ∅: 0 KVA : _____AMPS
C ∅: 0 KVA : _____AMPS

ALL BUS SHALL BE 1000 APSI COPPER

ISOLATED GROUND BUS [ ]
NEUTRAL BUS [✓]
GROUND BUS [✓]
SUB FEED BUS [ ]

ELECTRICAL PANEL SCHEDULE (TO BE REPLACED) [1]

PANEL 4711-RP0039 (4711-PNL0039)
LOCATION OUTSIDE RM. E125
MOUNTING SURFACE
MFR./TYPE SQUARE D
MAIN BKR 400A
MAIN FEEDER SIZE 4#500MCM, 1#3G - 3-1/2"C

VOLTAGE 120/208
PHASE 3
WIRE 4
AMPS 400
AIC RATING 10K
FED FROM 4711-BPD007Y
*GFI BREAKER

CK1	PH	FRAME & AMPS	LOAD DESCRIPTION	KVA LOAD a∅	b∅	c∅	CK1	PH	FRAME & AMPS	LOAD DESCRIPTION	KVA LOAD a∅	b∅	c∅
1	A	15A/1P	SPARE				2	A	15A/1P	RECEPTACLES			
3	B	20A/2P	SPARE				4	B	15A/1P	RECEPTACLES			
5	C	-	-				6	C	15A/1P	LIGHTS			
7	A	20A/1P	SPARE				8	A	15A/1P	RECEPTACLES			
9	B	20A/1P	SPARE				10	B	15A/1P	RECEPTACLES			
11	C	20A/1P	SPARE				12	C	15A/1P	RECEPTACLES			
13	A	150A/3P	4711-XFMR0001				14	A	15A/1P	HEAT TRACE			
15	B	-	-				16	B	20A/2P	SPARE			
17	C	-	-				18	C	-	-			
19	A	20A/3P	SPARE				20	A	*20A/1P				
21	B	-	-				22	B	20A/1P	SPARE			
23	C	-	-				24	C	20A/1P	SPARE			
25	A	20A/1P	SPARE				26	A	20A/1P	SPARE			
27	B	20A/1P	SPARE				28	B	20A/1P	SPARE			
29	C	20A/1P	SPARE				30	C	20A/1P	SPARE			
31	A	20A/1P	SPARE				32	A	20A/1P	SPARE			
33	B	20A/1P	SPARE				34	B	20A/1P	SPARE			
35	C	20A/1P	SPARE				36	C	20A/1P	SPARE			
37	A	20A/1P	SPARE				38	A	20A/1P	SPARE			
39	B	20A/1P	SPARE				40	B	20A/1P	SPARE			
41	C	20A/1P	SPACE				42	C	20A/1P	SPARE			
SUB TOTAL							SUB TOTAL						

CONNECTED LOAD
A ∅: 0 KVA : _____AMPS
B ∅: 0 KVA : _____AMPS
C ∅: 0 KVA : _____AMPS

ALL BUS SHALL BE 1000 APSI COPPER

ISOLATED GROUND BUS [ ]
NEUTRAL BUS [✓]
GROUND BUS [✓]
SUB FEED BUS [ ]

ELECTRICAL PANEL SCHEDULE (TO BE REPLACED) [1]

PANEL 4711-RP0040 (4711-PNL0040)
LOCATION OUTSIDE RM. E125
MOUNTING SURFACE
MFR./TYPE SQUARE D
MAIN BKR 150A
MAIN FEEDER SIZE 4#1/0, 1#6G - 2"C

VOLTAGE 120/208
PHASE 3
WIRE 4
AMPS 200
AIC RATING 10K
FED FROM 4711-XFMR0001

CK1	PH	FRAME & AMPS	LOAD DESCRIPTION	KVA LOAD a∅	b∅	c∅	CK1	PH	FRAME & AMPS	LOAD DESCRIPTION	KVA LOAD a∅	b∅	c∅
1	A	20A/1P	SPARE				2	A	20A/1P	RECEPTACLES			
3	B	20A/2P	SPARE				4	B	20A/1P	RECEPTACLES			
5	C	-	-				6	C	30A/2P	SPARE			
7	A	20A/1P	SPARE				8	A	-	-			
9	B	40A/2P	SPARE				10	B	20A/1P	SPARE			
11	C	-	-				12	C	20A/1P	SPARE			
13	A	20A/1P	SPARE				14	A	20A/1P	SPARE			
15	B	20A/1P	SPARE				16	B	20A/1P	SPARE			
17	C	20A/1P	SPARE				18	C	20A/1P	SPARE			
19	A	20A/1P	SPARE				20	A	20A/1P	SPARE			
21	B	20A/1P	SPARE				22	B	20A/1P	SPARE			
23	C	20A/1P	SPARE				24	C	20A/2P	RECEPTACLES			
25	A	20A/1P	SPARE				26	A	-	-			
27	B	20A/1P	SPARE				28	B	20A/2P	RECEPTACLES			
29	C	20A/1P	SPARE				30	C	-	-			
SUB TOTAL							SUB TOTAL						

CONNECTED LOAD
A ∅: 0 KVA : _____AMPS
B ∅: 0 KVA : _____AMPS
C ∅: 0 KVA : _____AMPS

ALL BUS SHALL BE 1000 APSI COPPER

ISOLATED GROUND BUS [ ]
NEUTRAL BUS [✓]
GROUND BUS [✓]
SUB FEED BUS [ ]

MAXIMO # 4711-RP0033 (4711-PNL0033)	MAXIMO # 4711-RP0035 (4711-PNL0035)	MAXIMO # 4711-RP0037 (4711-PNL0037)
MAXIMO # 4711-RP0038 (4711-PNL0038)	MAXIMO # 4711-RP0039 (4711-PNL0039)	MAXIMO # 4711-RP0040 (4711-PNL0040)
MAXIMO # 4711-RP0041 (4711-PNL0041)	MAXIMO # 4711-RP0042 (4711-PNL0042)	MAXIMO # 4711-RP0043 (4711-PNL0043)

SCHEDULE PLAN

NOT TO SCALE

ELECTRICAL PANEL SCHEDULE (TO BE REPLACED) [1]

PANEL 4711-RP0041 (4711-PNL0041)
LOCATION RM. W174
MOUNTING SURFACE
MFR./TYPE SQUARE D
MAIN BKR 100A
MAIN FEEDER SIZE 4#2, 1#6G - 1-1/4"C

VOLTAGE 120/208
PHASE 3
WIRE 4
AMPS 200
AIC RATING 10K
FED FROM 4711-BDP02AF

CK1	PH	FRAME & AMPS	LOAD DESCRIPTION	KVA LOAD a∅	b∅	c∅	CK1	PH	FRAME & AMPS	LOAD DESCRIPTION	KVA LOAD a∅	b∅	c∅
1	A	20A/1P	ISOLATED RECEPTACLE				2	A	30A/2P	CHILLER			
3	B	20A/1P	ISOLATED RECEPTACLE				4	B	-	-			
5	C	20A/1P	ISOLATED RECEPTACLE				6	C	30A/2P	SPARE			
7	A	30A/3P	CHILLER				8	A	-	-			
9	B	-	-				10	B	30A/3P	SPARE			
11	C	-	-				12	C	-	-			
13	A	20A/1P	SPARE				14	A	-	-			
15	B	50A/3P	CB POWER SUPPLY				16	B	70A/3P	SC500 CVC			
17	C	-	-				18	C	-	-			
19	A	-	-				20	A	-	-			
21	B	20A/1P	SPARE				22	B	20A/1P	SPARE			
23	C	20A/1P	SPARE				24	C	20A/1P	SPARE			
25	A	20A/1P	SPARE				26	A	20A/1P	SPARE			
27	B	20A/1P	SPARE				28	B	20A/1P	SPARE			
29	C	20A/1P	SPARE				30	C	20A/1P	SPARE			
SUB TOTAL							SUB TOTAL						

CONNECTED LOAD
A ∅: 0 KVA : _____AMPS
B ∅: 0 KVA : _____AMPS
C ∅: 0 KVA : _____AMPS

ALL BUS SHALL BE 1000 APSI COPPER

ISOLATED GROUND BUS [ ]
NEUTRAL BUS [✓]
GROUND BUS [✓]
SUB FEED BUS [ ]

ELECTRICAL PANEL SCHEDULE (TO BE REPLACED) [1]

PANEL 4711-RP0042 (4711-PNL0042)
LOCATION RM. W174
MOUNTING SURFACE
MFR./TYPE SQUARE D
MAIN BKR 100A
MAIN FEEDER SIZE 4#2, 1#6G - 1-1/4"C

VOLTAGE 120/208
PHASE 3
WIRE 4
AMPS 200
AIC RATING 10K
FED FROM 4711-BDP002X

CK1	PH	FRAME & AMPS	LOAD DESCRIPTION	KVA LOAD a∅	b∅	c∅	CK1	PH	FRAME & AMPS	LOAD DESCRIPTION	KVA LOAD a∅	b∅	c∅
1	A	60A/3P	CNC MACHINE				2	A	30A/2P	SPARE			
3	B	-	-				4	B	-	-			
5	C	-	-				6	C	30A/2P	J BOX WEST WALL CHILLER			
7	A	20A/1P	SPARE				8	A	-	-			
9	B	20A/1P	EXHAUST FAN				10	B	20A/1P	NEW PUMP			
11	C	20A/1P	FUME HOOD				12	C	20A/1P	WATER HEATER			
13	A	20A/1P	SPARE				14	A	20A/1P	REC			
15	B	20A/1P	SPARE				16	B	20A/1P	REC			
17	C	20A/1P	SPARE				18	C	30A/2P	SPARE			
19	A	20A/1P	SPARE				20	A	-	-			
21	B	20A/1P	SPARE				22	B	30A/3P	SPARE			
23	C	20A/1P	SPARE				24	C	-	-			
25	A	20A/1P	SPARE				26	A	-	-			
27	B	20A/1P	SPARE				28	B	20A/1P	SPARE			
29	C	20A/1P	SPARE				30	C	20A/1P	SPARE			
SUB TOTAL							SUB TOTAL						

CONNECTED LOAD
A ∅: 0 KVA : _____AMPS
B ∅: 0 KVA : _____AMPS
C ∅: 0 KVA : _____AMPS

ALL BUS SHALL BE 1000 APSI COPPER

ISOLATED GROUND BUS [ ]
NEUTRAL BUS [✓]
GROUND BUS [✓]
SUB FEED BUS [ ]

ELECTRICAL PANEL SCHEDULE (TO BE REPLACED) [1]

PANEL 4711-RP0043 (4711-PNL0043)
LOCATION RM. E180
MOUNTING SURFACE
MFR./TYPE SQUARE D
MAIN BKR 100
MAIN FEEDER SIZE 4#3, 1#8G - 1-1/4"C

VOLTAGE 120/208
PHASE 3
WIRE 4
AMPS 200
AIC RATING 10K
FED FROM 4711-SS0132
*GFI BREAKER

CK1	PH	FRAME & AMPS	LOAD DESCRIPTION	KVA LOAD a∅	b∅	c∅	CK1	PH	FRAME & AMPS	LOAD DESCRIPTION	KVA LOAD a∅	b∅	c∅
1	A	20A/1P	LTS				2	A	20A/1P	SPARE			
3	B	20A/1P	SPARE				4	B	20A/1P	SPARE			
5	C	20A/1P	SPARE				6	C	20A/1P	SPARE			
7	A	20A/1P	SPARE				8	A	20A/1P	RECEPTACLES			
9	B	20A/1P	EXHAUST FAN				10	B	20A/1P	RECEPTACLES			
11	C	20A/1P	SPARE				12	C	20A/1P	RECEPTACLES			
13	A	20A/1P	RECEPTACLES				14	A	*30A/1P	RECEPTACLES			
15	B	*30A/1P	RECEPTACLES				16	B	20A/1P	RECEPTACLES			
17	C	*20A/1P	RECEPTACLES				18	C	20A/1P	RECEPTACLES			
19	A	*20A/1P	RECEPTACLES				20	A	20A/2P	RECEPTACLES			
21	B	20A/1P	SPARE				22	B	-	RECEPTACLES			
23	C	20A/1P	SPARE				24	C	20A/1P	SPARE			
25	A	20A/1P	SPARE				26	A	20A/1P	SPARE			
27	B	20A/1P	SPARE				28	B	20A/1P	SPARE			
29	C	20A/1P	SPARE				30	C	20A/1P	SPARE			
SUB TOTAL							SUB TOTAL						

CONNECTED LOAD
A ∅: 0 KVA : _____AMPS
B ∅: 0 KVA : _____AMPS
C ∅: 0 KVA : _____AMPS

ALL BUS SHALL BE 1000 APSI COPPER

ISOLATED GROUND BUS [ ]
NEUTRAL BUS [✓]
GROUND BUS [✓]
SUB FEED BUS [ ]

WARNING
DO NOT SCALE THIS DRAWING
THIS DRAWING WAS DESIGNED TO BE PRINTED AT A NASA SHEET SIZE: MSFC STD. SIZE 40" X 26"

ALABAMA REGISTERED No. 26967 PROFESSIONAL ENGINEER JOHN AVERRETT 9/4/15

REV	BY	DATE	REVISION	C.I. NO.	APPROVED

Marshall Space Flight Center
Huntsville, Alabama 35812

BUILDING 4711
REVITALIZE ELECTRICAL SYSTEMS

PANEL SCHEDULES

AE FIRM: GOODWYN MILLS CAWOOD / MERRICK & COMPANY — JOINT VENTURE

NASA AE CONTRACT NO. NNM12AA49C NNM14AA72T

SUBMITTED: JENNIFER LANDRY
AE: DATE: 09/15/15
DESIGNED: S. CRITTENDEN
DRAWN: M. PATE
CHECKED: J. AVERRETT
SCALE: AS SHOWN

APPROVAL RECOMMENDED: CODY GOODMAN, AS22 PROJECT A/E
APPROVAL RECOMMENDED: TIM DOSS, AS22 SUPPORT A/E
APPROVAL RECOMMENDED: PHIL HENDRIX, AS22 TEAM LEAD
SPEC. NO. FAC-M5063

APPROVED: NELSON OLINGER, AS22 GROUP LEAD — DATE: 09/15/15

DRAWING NO. FAC-CU-4711-E705
SHEET 31 OF 38

FINAL SUBMITTAL
ISSUED FOR CONSTRUCTION
REF. NO. E705

A | B | C | D | E | F | G

ELECTRICAL PANEL SCHEDULE (TO BE REPLACED) [1]

PANEL 4711-RP0045 (4711-PNL0045)
LOCATION RM. W136
MOUNTING FLUSH
MFR./TYPE SQUARE D
MAIN BKR 200A
MAIN FEEDER SIZE 4#3/0, 1#6G - 2"C

VOLTAGE 120/208
PHASE 3
WIRE 4
AMPS 200
AIC RATING 22K
FED FROM 4711-BDP002D

*GFI BREAKER

CK1	PH	FRAME & AMPS	LOAD DESCRIPTION	KVA LOAD a∅	b∅	c∅	CK1	PH	FRAME & AMPS	LOAD DESCRIPTION	KVA LOAD a∅	b∅	c∅
1	A	70A/3P	RECEPT RM 53				2	A	20A/3P	54 FLOOR			
3	B	-	RECEPT RM 54/36				4	B	-	-			
5	C	-	RECEPT RM 53				6	C	-	-			
7	A	*20A/1P	W134 RECEPT RM 54/36				8	A	20A/1P	54 FLOOR			
9	B	*20A/1P	RECEPT RM 53				10	B	30A/2P	RECEPT ISO BOOTH			
11	C	20A/1P	W134 RECEPT RM 54				12	C	-				
13	A	20A/1P	W140 RECEPT RM 59				14	A	20A/3P	4711-SS0014			
15	B	20A/1P	02 MONITOR RM 140				16	B	-	-			
17	C	20A/1P	RECEPTS RM 59				18	C	-	-			
19	A	20A/1P	EI. 3 RM 59				20	A	30A/3P	4711-SS0011			
21	B	20A/1P	WASHER				22	B	-	-			
23	C	20A/1P	SOUND PROOF RM LTS RM 140				24	C	-	-			
25	A	20A/1P	SOUND PROOF RM LTS RM 140				26	A	30A/3P	WELLS MILL			
27	B	20A/1P	HOT WATER CIR. PUMP				28	B	-	-			
29	C	20A/1P					30	C	-	-			
31	A	20A/1P	GFI REC MENS BATHROOM				32	A	20A/1P				
33	B	20A/1P					34	B	20A/1P				
35	C	20A/1P					36	C	*20A/1P				
37	A	30A/2P	WATER HEATER RM. W138				38	A	*20A/1P				
39	B	-	VIA 4711-SS0060				40	B	20A/1P	HOT WATER CIR. PUMP			
41	C	20A/1P	SPARE				42	C	20A/1P	SPARE			
SUB TOTAL							SUB TOTAL						

CONNECTED LOAD
A ∅ : 0 KVA : ___________AMPS
B ∅ : 0 KVA : ___________AMPS
C ∅ : 0 KVA : ___________AMPS

ALL BUS SHALL BE 1000 APSI COPPER

ISOLATED GROUND BUS ☐
NEUTRAL BUS ✓
GROUND BUS ✓
SUB FEED BUS ☐

ELECTRICAL PANEL SCHEDULE (TO BE REPLACED) [1]

PANEL 4711-RP0046 (4711-PNL0046)
LOCATION RM. W140A
MOUNTING SURFACE
MFR./TYPE SQUARE D
MAIN BKR 100A
MAIN FEEDER SIZE 4#2 & 1#8G - 1-1/4"C

VOLTAGE 120/208
PHASE 3
WIRE 4
AMPS 200
AIC RATING 10K
FED FROM 4711-BDP002H

CK1	PH	FRAME & AMPS	LOAD DESCRIPTION	KVA LOAD a∅	b∅	c∅	CK1	PH	FRAME & AMPS	LOAD DESCRIPTION	KVA LOAD a∅	b∅	c∅
1	A	20/1P	RECEP - 140B				2	A	20/1P	RECEP - 140B			
3	B	20/1P	LIGHTS - 140B				4	B	45/2P	SPARE			
5	C	30/1P	RECEP - 140B				6	C	-	-			
7	A	20/1P	UNIT HEATERS				8	A	30/2P	4711-AH15			
9	B	20/2P	UNIT HEATERS				10	B	-	-			
11	C	-	-				12	C	30A/2P	SPARE			
13	A	20A/1P	SPARE				14	A	-	-			
15	B	20A/1P	SPARE				16	B	20A/1P	SPARE			
17	C	20A/1P	SPARE				18	C	20A/1P	SPARE			
19	A	20A/1P	SPARE				20	A	20A/1P	SPARE			
21	B	20A/1P	SPARE				22	B	20A/1P	SPARE			
23	C	20A/1P	SPARE				24	C	20A/1P	SPARE			
25	A	20A/1P	SPARE				26	A	20A/1P	SPARE			
27	B	20A/1P	SPARE				28	B	20A/1P	SPARE			
29	C	20A/1P	SPARE				30	C	20A/1P	SPARE			

A ∅ : 0 KVA : ___________AMPS
B ∅ : 0 KVA : ___________AMPS
C ∅ : 0 KVA : ___________AMPS

ALL BUS SHALL BE 1000 APSI COPPER

NEUTRAL BUS ✓
GROUND BUS ✓
SUB FEED BUS ☐

ELECTRICAL PANEL SCHEDULE (TO BE REPLACED) [1]

PANEL 4711-RP0048 (4711-PNL0048)
LOCATION RM. E127A
MOUNTING SURFACE
MFR./TYPE SQUARE D
MAIN BKR 100A
MAIN FEEDER SIZE 4#3, 1#8G - 1-1/4"C

VOLTAGE 120/208
PHASE 3
WIRE 4
AMPS 200
AIC RATING 10K
FED FROM 4711-BDP007M

CK1	PH	FRAME & AMPS	LOAD DESCRIPTION	KVA LOAD a∅	b∅	c∅	CK1	PH	FRAME & AMPS	LOAD DESCRIPTION	KVA LOAD a∅	b∅	c∅
1	A	20A/1P	SPARE				2	A	40A/3P	4711-SS0128			
3	B	20A/1P	SPARE				4	B	-	-			
5	C	20A/1P	SPARE				6	C	-	-			
7	A	20A/1P	REC EMERG LTS				8	A	30A/1P	REC RM 127A			
9	B	20A/1P	LTS 127A				10	B	20A/1P	-			
11	C	20A/1P	A/C CONTROL MODULE				12	C	20A/1P	-			
13	A	30A/2P	SPARE				14	A	20A/1P	TURNSTALL GATE			
15	B	-	-				16	B	20A/1P	SPARE			
17	C	40A/2P	4711-SS0176				18	C	20A/1P	SPARE			
19	A	-	-				20	A	20A/1P	AC GENERATOR E/SIDE			
21	B	40A/3P	4711-SS0127				22	B	20A/2P	REC 2			
23	C	-	-				24	C	-	-			
25	A	-	-				26	A	20A/2P	REC 3			
27	B	20A/2P	REC 1				28	B	-	-			
29	C	-	-				30	C	20A/1P	REC RM 127A			
31	A	40A/3P	SPARE				32	A	40A/3P	SPARE			
33	B	-	-				34	B	-	-			
35	C	-	-				36	C	-	-			
37	A	20A/1P	SPARE				38	A	20A/1P	SPARE			
39	B	20A/1P	SPARE				40	B	20A/1P	SPARE			
41	C	20A/1P	SPARE				42	C	20A/1P	SPARE			
SUB TOTAL							SUB TOTAL						

CONNECTED LOAD
A ∅ : 0 KVA : ___________AMPS
B ∅ : 0 KVA : ___________AMPS
C ∅ : 0 KVA : ___________AMPS

ALL BUS SHALL BE 1000 APSI COPPER

ISOLATED GROUND BUS ☐
NEUTRAL BUS ✓
GROUND BUS ✓
SUB FEED BUS ☐

PLAN NOTES

1. REPLACE EXISTING PANEL WITH NEW PANEL AS SHOWN.
2. EXISTING PANEL TO REMAIN, NO WORK AT THIS TIME.
3. NOT USED.

ELECTRICAL PANEL SCHEDULE (TO REMAIN) [2]

PANEL 4711-RP0049 (4711-PNL0049)
LOCATION OUTSIDE RM. W113
MOUNTING SURFACE
MFR./TYPE SIEMENS
MAIN BKR MLO
MAIN FEEDER SIZE 4#3/0, 1#6G - 2"C

VOLTAGE 120/208
PHASE 3
WIRE 4
AMPS 250
AIC RATING 22K
FED FROM 4711-PP0006

CK1	PH	FRAME & AMPS	LOAD DESCRIPTION	KVA LOAD a∅	b∅	c∅	CK1	PH	FRAME & AMPS	LOAD DESCRIPTION	KVA LOAD a∅	b∅	c∅
1	A	20A/1P	LTS LOBBY				2	A	20A/1P	LTS W110, W110B			
3	B	20A/1P	LTS W113A				4	B	20A/1P	LTS W112, W114			
5	C	20A/1P	UPS RM E5				6	C	20A/1P	LTS W112A			
7	A	20A/1P	LTS				8	A	20A/1P	LTS W114A			
9	B	20A/1P	LTS RM E5				10	B	20A/1P	REC W114A, W114			
11	C	20A/1P	REC RM W110				12	C	20A/1P	REC W110B			
13	A	20A/1P	REC RM W112A				14	A	20A/1P	SPARE			
15	B	20A/1P	REC RM W110A				16	B	20A/1P	LTS S/HALLWAY			
17	C	20A/1P	REC LOBBY				18	C	20A/1P	SPARE			
19	A	20A/1P	REC RM W112				20	A	20A/1P	LTS			
21	B	20A/1P	REC S/WALL				22	B	20A/1P	LTS W113B,REC W115B,W113C			
23	C	20A/1P	VEND MACH W111A-REC LOBB				24	C	20A/1P	LTS W111			
25	A	20A/1P	LTS W115C				26	A	20A/1P	REC W100E, W111B			
27	B	20A/1P	LTS				28	B	20A/1P	REC W111A			
29	C	20A/1P	LTS W113				30	C	20A/1P	REC W113B			
31	A	20A/1P	SPARE				32	A	20A/1P	REC W115, A, B, C			
33	B	30A/2P	REC IN LOBBY				34	B	20A/1P	REC W111A			
35	C	-	-				36	C	-	SPACE			
37	A	-	SPACE				38	A	-	SPACE			
39	B	-	SPACE				40	B	-	SPACE			
41	C	-	SPACE				42	C	-	SPACE			
SUB TOTAL							SUB TOTAL						

CONNECTED LOAD
A ∅ : 0 KVA : ___________AMPS
B ∅ : 0 KVA : ___________AMPS
C ∅ : 0 KVA : ___________AMPS

ALL BUS SHALL BE 1000 APSI COPPER

ISOLATED GROUND BUS ☐
NEUTRAL BUS ✓
GROUND BUS ✓
SUB FEED BUS ☐

ELECTRICAL PANEL SCHEDULE (TO BE REPLACED) [1]

PANEL 4711-RP0050 (4711-PNL0050)
LOCATION RM. W139
MOUNTING SURFACE
MFR./TYPE SQUARE D
MAIN BKR 100A
MAIN FEEDER SIZE 4#3, 1#8G - 1-1/4"C

VOLTAGE 120/208
PHASE 3
WIRE 4
AMPS 200
AIC RATING 10K
FED FROM 4711-BDP002B

CK1	PH	FRAME & AMPS	LOAD DESCRIPTION	KVA LOAD a∅	b∅	c∅	CK1	PH	FRAME & AMPS	LOAD DESCRIPTION	KVA LOAD a∅	b∅	c∅
1	A	30A/1P	LIGHTS				2	A	20A/1P	LIGHTS			
3	B	30A/1P	RECEPTACLE				4	B	30A/AP	LIGHTS			
5	C	20A/1P	SPARE				6	C	20A/1P	SPARE			
7	A	20A/1P	SPARE				8	A	20A/1P	SPARE			
9	B	20A/1P	SPARE				10	B	20A/1P	SPARE			
11	C	20A/1P	SPARE				12	C	20A/1P	SPARE			
13	A	20A/1P	SPARE				14	A	20A/1P	SPARE			
15	B	20A/1P	SPARE				16	B	20A/1P	SPARE			
17	C	20A/1P	SPARE				18	C	20A/1P	SPARE			
19	A	20A/1P	SPARE				20	A	20A/1P	SPARE			
21	B	20A/1P	SPARE				22	B	20A/1P	SPARE			
23	C	20A/1P	SPARE				24	C	20A/1P	SPARE			
25	A	20A/1P	SPARE				26	A	20A/1P	SPARE			
27	B	20A/1P	SPARE				28	B	20A/1P	SPARE			
29	C	20A/1P	SPARE				30	C	20A/1P	SPARE			

A ∅ : 0 KVA : ___________AMPS
B ∅ : 0 KVA : ___________AMPS
C ∅ : 0 KVA : ___________AMPS

ALL BUS SHALL BE 1000 APSI COPPER

NEUTRAL BUS ✓
GROUND BUS ✓
SUB FEED BUS ☐

ELECTRICAL PANEL SCHEDULE (TO BE REPLACED) [1]

PANEL 4711-RP0051 (4711-PNL0051)
LOCATION OUTSIDE RM. E114
MOUNTING SURFACE
MFR./TYPE SQUARE D
MAIN BKR 80A
MAIN FEEDER SIZE 3#4, 1#8G - 1"C

VOLTAGE 120/240
PHASE 1
WIRE 3
AMPS 200
AIC RATING 10K
FED FROM 4711-MTS0002

CK1	PH	FRAME & AMPS	LOAD DESCRIPTION	KVA LOAD a∅	b∅	CK1	PH	FRAME & AMPS	LOAD DESCRIPTION	KVA LOAD a∅	b∅
1	A	30A/2P	REC PLUG MOLD RM E112			2	A	-	SPACE		
3	B	-	-			4	B	20A/1P	REC POWER POLE RM E114		
5	A	-	SPACE			6	A	-	SPACE		
7	B	20A/1P	REC PLUG MOLD RM E112			8	B	20A/1P	REC POWER POLE RM E114		
9	A	-	SPACE			10	A	-	SPACE		
11	B	20A/1P	REC PLUG MOLD RM E112			12	B	20A/1P	REC POWER POLE RM E114		
13	A	-	SPACE			14	A	-	SPACE		
15	B	20A/1P	REC PLUG MOLD RM E112			16	B	20A/1P	REC POWER POLE RM E114		
17	A	-	SPACE			18	A	-	SPACE		
19	B	20A/1P	REC PLUG MOLD RM E112			20	B	20A/1P	REC PLUG MOLD RM E112A		
21	A	-	SPACE			22	A	-	SPACE		
23	B	20A/1P	REC PLUG MOLD RM E112			24	B	20A/1P	REC PLUG MOLD RM E112A		
25	A	-	SPACE			26	A	-	SPACE		
27	B	20A/1P	REC PLUG MOLD RM E112			28	B	20A/1P	REC PLUG MOLD RM E112A		
29	A	20A/1P	SPARE			30	A	-	SPACE		
31	B	20A/1P	SPARE			32	B	30A/1P	REC PLUG MOLD RM E114D		
33	A	20A/1P	SPARE			34	A	20A/1P	SPARE		
35	B	20A/1P	SPARE			36	B	20A/1P	SPARE		
37	A	20A/1P	SPARE			38	A	20A/1P	SPARE		
39	B	20A/1P	SPARE			40	B	20A/1P	SPARE		
41	A	20A/1P	SPARE			42	A	20A/1P	SPARE		
SUB TOTAL						SUB TOTAL					

CONNECTED LOAD
A ∅ : 0 KVA : ___________AMPS
B ∅ : 0 KVA : ___________AMPS
C ∅ : 0 KVA : ___________AMPS

ALL BUS SHALL BE 1000 APSI COPPER

ISOLATED GROUND BUS ☐
NEUTRAL BUS ✓
GROUND BUS ✓
SUB FEED BUS ☐

MAXIMO # 4711-RP0045 (4711-PNL0045)	MAXIMO # 4711-RP0046 (4711-PNL0046)	MAXIMO # 4711-RP0048 (4711-PNL0048)
MAXIMO # 4711-RP0049 (4711-PNL0049)	MAXIMO # 4711-RP0050 (4711-PNL0050)	MAXIMO # 4711-RP0051 (4711-PNL0051)
MAXIMO # 4711-RP0052 (4711-PNL0052)	MAXIMO # 4711-RP0056 (4711-PNL0056)	

SCHEDULE PLAN

NOT TO SCALE

ELECTRICAL PANEL SCHEDULE (TO BE REPLACED) [1]

PANEL 4711-RP0052 (4711-PNL0052)
LOCATION OUTSIDE RM. E114
MOUNTING SURFACE
MFR./TYPE SQUARE D
MAIN BKR 80A
MAIN FEEDER SIZE 3#4, 1#8G - 1"C

VOLTAGE 120/240
PHASE 1
WIRE 3
AMPS 100
AIC RATING 10K
FED FROM 4711-MTS0001

CK1	PH	FRAME & AMPS	LOAD DESCRIPTION	KVA LOAD a∅	b∅	CK1	PH	FRAME & AMPS	LOAD DESCRIPTION	KVA LOAD a∅	b∅
1	A	-	SPACE			2	A	20A/2P	REC RM E114		
3	B	20A/1P	REC RM E114			4	B	-	-		
5	A	-	SPACE			6	A	-	SPACE		
7	B	20A/1P	REC RM E114			8	B	20A/1P	REC RM E114		
9	A	-	SPACE			10	A	-	SPACE		
11	B	20A/1P	REC RM E114			12	B	20A/1P	REC PLUG MOLD E114D		
13	A	-	SPACE			14	A	-	SPACE		
15	B	30A/2P	ISO GRND REC E179B			16	B	20A/1P	REC PLUG MOLD E114D		
17	A	-	-			18	A	-	SPACE		
19	B	20A/1P	SPARE			20	B	20A/1P	REC PLUG MOLD E114D		
21	A	-	SPACE			22	A	-	SPACE		
23	B	20A/1P	REC RM E114D			24	B	20A/1P	REC PLUG MOLD E114D		
25	A	-	SPACE			26	A	-	SPACE		
27	B	-	SPACE			28	B	20A/1P	REC PLUG MOLD E114D		
29	A	-	SPACE			30	A	-	SPACE		
31	B	-	SPACE			32	B	20A/1P	REC PLUG MOLD E114D		
33	A	-	SPACE			34	A	-	SPACE		
35	B	-	SPACE			36	B	-	SPACE		
37	A	-	SPACE			38	A	-	SPACE		
39	B	80A/2P	MAIN			40	B	-	SPACE		
41	A	-	-			42	A	-	SPACE		
SUB TOTAL						SUB TOTAL					

CONNECTED LOAD
A ∅ : 0 KVA : ___________AMPS
B ∅ : 0 KVA : ___________AMPS
C ∅ : 0 KVA : ___________AMPS

ALL BUS SHALL BE 1000 APSI COPPER

ISOLATED GROUND BUS ☐
NEUTRAL BUS ✓
GROUND BUS ✓
SUB FEED BUS ☐

ELECTRICAL PANEL SCHEDULE (TO BE REPLACED) [1]

PANEL 4711-RP0056 (4711-PNL0056)
LOCATION RM. E177
MOUNTING SURFACE
MFR./TYPE SQUARE D
MAIN BKR 100A
MAIN FEEDER SIZE 4#3, 1#8G - 1-1/4"C

VOLTAGE 120/208
PHASE 3
WIRE 4
AMPS 200
AIC RATING 10K
FED FROM 4711-RP0033

CK1	PH	FRAME & AMPS	LOAD DESCRIPTION	KVA LOAD a∅	b∅	c∅	CK1	PH	FRAME & AMPS	LOAD DESCRIPTION	KVA LOAD a∅	b∅	c∅
1	A	20A/1P	SPARE				2	A	20A/1P	RECEPTACLES			
3	B	20A/1P	SPARE				4	B	20A/1P	RECEPTACLES			
5	C	20A/1P	RECEPTACLES				6	C	20A/1P	RECEPTACLES			
7	A	20A/1P	RECEPTACLES				8	A	20A/1P	RECEPTACLES			
9	B	20A/1P	SPARE				10	B	20A/1P	SPARE			
11	C	20A/1P	SPARE				12	C	20A/1P	SPARE			
13	A	20A/1P	SPARE				14	A	20A/1P	SPARE			
15	B	20A/1P	SPARE				16	B	20A/1P	SPARE			
17	C	20A/1P	SPARE				18	C	20A/1P	SPARE			
19	A	20A/1P	SPARE				20	A	20A/1P	SPARE			
21	B	20A/1P	SPARE				22	B	20A/1P	SPARE			
23	C	20A/1P	SPARE				24	C	20A/1P	SPARE			
25	A	20A/1P	SPARE				26	A	20A/1P	SPARE			
27	B	20A/1P	SPARE				28	B	20A/1P	SPARE			
29	C	20A/1P	SPARE				30	C	20A/1P	SPARE			

A ∅ : 0 KVA : ___________AMPS
B ∅ : 0 KVA : ___________AMPS
C ∅ : 0 KVA : ___________AMPS

ALL BUS SHALL BE 1000 APSI COPPER

NEUTRAL BUS ✓
GROUND BUS ✓
SUB FEED BUS ☐

ALABAMA REGISTERED No. 26967 PROFESSIONAL ENGINEER JOHN AVERRETT 9/4/15

WARNING
DO NOT SCALE THIS DRAWING
THIS DRAWING WAS DESIGNED TO BE PRINTED AT A NASA SHEET SIZE: MSFC STD. SIZE 40" X 28"

REV	BY	DATE	REVISION	C.I. NO.	APPROVED

Marshall Space Flight Center
Huntsville, Alabama 35812

BUILDING 4711
REVITALIZE ELECTRICAL SYSTEMS

PANEL SCHEDULES

AE FIRM: GOODWYN MILLS CAWOOD | MERRICK & COMPANY JOINT VENTURE

NASA AE CONTRACT NO. NNM12AA49C NNM14AA72T

SUBMITTED: JENNIFER LANDRY
AE: DATE: 09/15/15
DESIGNED S. CRITTENDEN
DRAWN M. PATE
CHECKED J. AVERRETT
SCALE: AS SHOWN

APPROVAL RECOMMENDED: CODY GOODMAN AS22 PROJECT A/E
APPROVAL RECOMMENDED: TIM DOSS AS22 SUPPORT A/E
APPROVAL RECOMMENDED: PHIL HENDRIX AS22 TEAM LEAD
SPEC. NO. FAC-M5063

APPROVED: NELSON OLINGER
AS22 GROUP LEAD DATE: 09/15/15

DRAWING NO. FAC-CU-4711-E706

SHEET 32 OF 38

FINAL SUBMITTAL
ISSUED FOR CONSTRUCTION
REF. NO. E706

5 | 4 | 3 | 2 | 1

Master Bid Disk 10-06-2015

A | B | C | D | E | F | G

ELECTRICAL PANEL SCHEDULE (TO BE REPLACED) [1]

PANEL 4711-RP0057 (4711-PNL0057) — VOLTAGE 120/208
LOCATION RM. E115 — PHASE 3
MOUNTING SURFACE — WIRE 4
MFR./TYPE SQUARE D — AMPS 200
MAIN BKR 100A — AIC RATING 10K
MAIN FEEDER SIZE 4#3, 1#8G - 1-1/4"C — FED FROM 4711-PP0007

CK1	PH	FRAME & AMPS	LOAD DESCRIPTION	KVA LOAD aØ	bØ	cØ	CK1	PH	FRAME & AMPS	LOAD DESCRIPTION	KVA LOAD aØ	bØ	cØ
1	A	30A/1P	TWIST LOCK RECEP N WALL				2	A	20A/1P	RECEP N WALL			
3	B	20A/1P	RECEP N WALL				4	B	20A/1P	RECEP N WALL			
5	C	20A/1P	RECEP N WALL				6	C	20A/1P	RECEP N WALL			
7	A	20A/1P	RECEP N WALL				8	A	20A/1P	SPACE			
9	B	20A/1P	RECEP N WALL				10	B	20A/1P	SPARE			
11	C	20A/1P	RECEP PLUG MOLD EAST				12	C	20A/1P	RECEP PLUG MOLD EAST			
13	A	20A/1P	SPARE				14	A	20A/1P	SPARE			
15	B	20A/1P	SPARE				16	B	20A/1P	SPARE			
17	C	20A/1P	SPARE				18	C	20A/1P	SPARE			
19	A	20A/1P	SPARE				20	A	20A/1P	SPARE			
21	B	20A/1P	SPARE				22	B	20A/1P	SPARE			
23	C	20A/1P	SPARE				24	C	20A/1P	SPARE			
25	A	20A/1P	SPARE				26	A	20A/1P	SPARE			
27	B	20A/1P	SPARE				28	B	20A/1P	SPARE			
29	C	20A/1P	SPARE				30	C	20A/1P	SPARE			
SUB TOTAL							SUB TOTAL						

CONNECTED LOAD
A Ø: 0 KVA : ________AMPS — ALL BUS SHALL BE 1000 APSI COPPER
B Ø: 0 KVA : ________AMPS
C Ø: 0 KVA : ________AMPS

ISOLATED GROUND BUS ☐
NEUTRAL BUS ✓
GROUND BUS ✓
SUB FEED BUS ☐

ELECTRICAL PANEL SCHEDULE (TO BE REMOVED) [3]

PANEL 4711-RP0058 (4711-PNL0058) — VOLTAGE 120/240
LOCATION RM. E115 — PHASE 1
MOUNTING SURFACE — WIRE 3
MFR./TYPE GENERAL ELECTRIC — AMPS 60
MAIN BKR MLO — AIC RATING 10K
MAIN FEEDER SIZE — FED FROM 4711-XFMR0017

CK1	PH	FRAME & AMPS	LOAD DESCRIPTION	KVA LOAD aØ	bØ	CK1	PH	FRAME & AMPS	LOAD DESCRIPTION	KVA LOAD aØ	bØ
1	A	20A/1P	RECEPT N. WALL			2	A	20A/1P	SPARE		
3	B	20A/1P	RECPT PLUG MOLD EAST			4	B	20A/1P	RECEPT PLUG MOLD EAST		
5	C	-	SPACE			6	C	-	SPACE		
7	A	-	SPACE			8	A	-	SPACE		
9	B	-	SPACE			10	B	-	SPACE		
SUB TOTAL						SUB TOTAL					

CONNECTED LOAD
A Ø: 0 KVA : ________AMPS — ALL BUS SHALL BE 1000 APSI COPPER
B Ø: 0 KVA : ________AMPS
C Ø: 0 KVA : ________AMPS

ISOLATED GROUND BUS ☐
NEUTRAL BUS ✓
GROUND BUS ✓
SUB FEED BUS ☐

ELECTRICAL PANEL SCHEDULE (TO REMAIN) [2]

PANEL 4711-RP0059 (4711-PNL0059) — VOLTAGE 120/208
LOCATION OUTSIDE RM. W175A — PHASE 3
MOUNTING SURFACE — WIRE 4
MFR./TYPE SIEMENS — AMPS 250
MAIN BKR MLO — AIC RATING 10K
MAIN FEEDER SIZE 4#3/0 & 1#6G - 2"C — FED FROM 4711-PP0006

CK1	PH	FRAME & AMPS	LOAD DESCRIPTION	KVA LOAD aØ	bØ	cØ	CK1	PH	FRAME & AMPS	LOAD DESCRIPTION	KVA LOAD aØ	bØ	cØ
1	A	30A/1P	RECEPTACLES				2	A	30A/1P	RECEPTACLES			
3	B	30A/1P	RECEPTACLES				4	B	30A/1P	RECEPTACLES			
5	C	30A/1P	RECEPTACLES				6	C	30A/1P				
7	A	30A/1P					8	A	30A/1P	EXIT LIGHTING			
9	B	30A/1P					10	B	30A/1P	LIGHTS			
11	C	30A/1P					12	C	30A/1P	LIGHTS			
13	A	30A/1P					14	A	30A/1P	LIGHTS			
15	B	30A/1P	EMERGENCY LIGHTS				16	B	30A/1P	LIGHTS			
17	C	30A/1P	EMERGENCY LIGHTS				18	C	30A/1P	LIGHTS			
19	A	30A/1P					20	A	30A/1P				
21	B	30A/1P					22	B	30A/1P				
23	C	30A/1P					24	C	30A/1P				
25	A	30A/1P					26	A	30A/1P				
27	B	30A/1P					28	B	30A/1P				
29	C	30A/1P					30	C	30A/1P				
31	A	30A/1P					32	A	30A/1P				
33	B	30A/1P					34	B	30A/1P				
35	C	20A/1P					36	C	20A/1P				
37	A	20A/1P					38	A	20A/1P				
39	B	20A/1P					40	B	20A/1P				
41	C	20A/1P					42	C	20A/1P				
SUB TOTAL							SUB TOTAL						

CONNECTED LOAD
A Ø: 0 KVA : ________AMPS — ALL BUS SHALL BE 1000 APSI COPPER
B Ø: 0 KVA : ________AMPS
C Ø: 0 KVA : ________AMPS

ISOLATED GROUND BUS ☐
NEUTRAL BUS ✓
GROUND BUS ✓
SUB FEED BUS ☐

PLAN NOTES

[1] REPLACE EXISTING PANEL WITH NEW PANEL AS SHOWN.

[2] EXISTING PANEL TO REMAIN, NO WORK AT THIS TIME.

[3] EXISTING PANEL TO BE REMOVED AND ALL CONDUIT AND CONDUCTORS.

[4] NEW PANEL OR SWITCHBOARD TO BE INSTALLED.

[5] 4711-RP0061 TO REMAIN. CONTRACTOR TO FIELD VERIFY PANEL AND PROVIDE PANEL SCHEDULE DIRECTORY.

ELECTRICAL PANEL SCHEDULE (NEW) [4]

PANEL 4711-RP0060 — VOLTAGE 120/208
LOCATION RM. W141 — PHASE 3
MOUNTING SURFACE — WIRE 4
MFR./TYPE SQUARE D — AMPS 200
MAIN BKR 100A — AIC RATING 10K
MAIN FEEDER SIZE 4#3, 1#8G - 1-1/4"C — FED FROM 4711-BDP002Z

CK1	PH	FRAME & AMPS	LOAD DESCRIPTION	KVA LOAD aØ	bØ	cØ	CK1	PH	FRAME & AMPS	LOAD DESCRIPTION	KVA LOAD aØ	bØ	cØ
1	A	20A/3P	4711-STRT0015				2	A	20A/3P	4711-SS0151			
3	B	-	-				4	B	-	-			
5	C	-	-				6	C	-	-			
7	A	20A/3P	4711-STRT0016				8	A	20A/3P	SPARE			
9	B	-	-				10	B	-	-			
11	C	-	-				12	C	-	-			
13	A	20A/3P	SPARE				14	A	20A/3P	SPARE			
15	B	-	-				16	B	-	-			
17	C	-	-				18	C	-	-			
19	A	20A/1P	SPARE				20	A	20A/1P	SPARE			
21	B	20A/1P	SPARE				22	B	20A/1P	SPARE			
23	C	20A/1P	SPARE				24	C	20A/1P	SPARE			
25	A	20A/1P	SPARE				26	A	20A/1P	SPARE			
27	B	20A/1P	SPARE				28	B	20A/1P	SPARE			
29	C	20A/1P	SPARE				30	C	20A/1P	SPARE			
SUB TOTAL							SUB TOTAL						

CONNECTED LOAD
A Ø: 0 KVA : ________AMPS — ALL BUS SHALL BE 1000 APSI COPPER
B Ø: 0 KVA : ________AMPS
C Ø: 0 KVA : ________AMPS

ISOLATED GROUND BUS ☐
NEUTRAL BUS ✓
GROUND BUS ✓
SUB FEED BUS ☐

ELECTRICAL PANEL SCHEDULE (TO REMAIN) [5]

PANEL 4711-RP0061 — VOLTAGE
LOCATION RM. E180A — PHASE
MOUNTING SURFACE — WIRE
MFR./TYPE — AMPS
MAIN BKR — AIC RATING
MAIN FEEDER SIZE — FED FROM

*CONTRACTOR TO FIELD VERIFY

CK1	PH	FRAME & AMPS	LOAD DESCRIPTION	KVA LOAD aØ	bØ	cØ	CK1	PH	FRAME & AMPS	LOAD DESCRIPTION	KVA LOAD aØ	bØ	cØ
1	A						2	A					
3	B						4	B					
5	C						6	C					
7	A						8	A					
9	B						10	B					
11	C						12	C					
13	A						14	A					
15	B						16	B					
17	C						18	C					
19	A						20	A					
21	B						22	B					
23	C						24	C					
25	A						26	A					
27	B						28	B					
29	C						30	C					
31	A						32	A					
33	B						34	B					
35	C						36	C					
37	A						38	A					
39	B						40	B					
41	C						42	C					
SUB TOTAL							SUB TOTAL						

CONNECTED LOAD
A Ø: 0 KVA : ________AMPS — ALL BUS SHALL BE 1000 APSI COPPER
B Ø: 0 KVA : ________AMPS
C Ø: 0 KVA : ________AMPS

ISOLATED GROUND BUS ☐
NEUTRAL BUS ✓
GROUND BUS ✓
SUB FEED BUS ☐

ELECTRICAL PANEL SCHEDULE (TO BE REPLACED) [1]

PANEL 4711-PP0001 (4711-PNL0012) — VOLTAGE 277/480
LOCATION OUTSIDE RM. E179 — PHASE 3
MOUNTING SURFACE — WIRE 4
MFR./TYPE SIEMENS — AMPS 225
MAIN BKR 225A — AIC RATING 22K
MAIN FEEDER SIZE 4#4/0 & 1#4G - 2-1/2"C — FED FROM 4711-BDP004R

*GFI BREAKER

CK1	PH	FRAME & AMPS	LOAD DESCRIPTION	KVA LOAD aØ	bØ	cØ	CK1	PH	FRAME & AMPS	LOAD DESCRIPTION	KVA LOAD aØ	bØ	cØ
1	A	*30A/3P	PUMP IN SHOP AREA P-2				2	A	*30A/3P	A/C UNIT 179A			
3	B	-	VIA 4711-SS0064				4	B	-	-			
5	C	-	-				6	C	-	-			
7	A	*30A/3P	4711-SS065				8	A	*30A/3P	DEGREASE 179			
9	B	-	-				10	B	-	-			
11	C	-	-				12	C	-	-			
13	A	*30A/3P	SPARE				14	A	*30A/3P	SPARE			
15	B	-	-				16	B	-	-			
17	C	-	-				18	C	-	-			
19	A	*30A/3P	SPARE				20	A	*30A/3P	SPARE			
21	B	-	-				22	B	-	-			
23	C	-	-				24	C	-	-			
25	A	*100A/3P	SPARE				26	A	-	SPACE			
27	B	-	-				28	B	-	SPACE			
29	C	-	-				30	C	-	SPACE			
31	A	-	SPACE				32	A	-	SPACE			
33	B	-	SPACE				34	B	-	SPACE			
35	C	-	SPACE				36	C	-	SPACE			
37	A	-	SPACE				38	A	-	SPACE			
39	B	-	SPACE				40	B	-	SPACE			
41	C	-	SPACE				42	C	-	SPACE			
SUB TOTAL							SUB TOTAL						

CONNECTED LOAD
A Ø: 0 KVA : ________AMPS — ALL BUS SHALL BE 1000 APSI COPPER
B Ø: 0 KVA : ________AMPS
C Ø: 0 KVA : ________AMPS

ISOLATED GROUND BUS ☐
NEUTRAL BUS ✓
GROUND BUS ✓
SUB FEED BUS ☐

SCHEDULE PLAN

NOT TO SCALE

MAXIMO # 4711-RP0057 (4711-PNL0057)	MAXIMO # 4711-RP0058 (4711-PNL0058)	MAXIMO # 4711-RP0059 (4711-PNL0059)
MAXIMO # 4711-RP0060	MAXIMO # 4711-RP0061	MAXIMO # 4711-PP0001 (4711-PNL0012)
MAXIMO # 4711-PP0002 (4711-PNL0034)	MAXIMO # 4711-PP0003 (4711-PNL0044)	MAXIMO # 4711-PP0004 (4711-PNL0047)

ELECTRICAL PANEL SCHEDULE (TO REMAIN) [2]

PANEL 4711-PP0002 (4711-PNL0034) — VOLTAGE 277/480
LOCATION OUTSIDE RM. E121 — PHASE 3
MOUNTING SURFACE — WIRE 4
MFR./TYPE SIEMENS — AMPS 250
MAIN BKR MLO — AIC RATING 17K
MAIN FEEDER SIZE 4#3, 1#8G - 1-1/4"C — FED FROM 4711-BDP06AL

*GFI BREAKER

CK1	PH	FRAME & AMPS	LOAD DESCRIPTION	KVA LOAD aØ	bØ	cØ	CK1	PH	FRAME & AMPS	LOAD DESCRIPTION	KVA LOAD aØ	bØ	cØ
1	A	-	SPACE				2	A	-	SPACE			
3	B	-	SPACE				4	B	-	SPACE			
5	C	-	SPACE				6	C	-	SPACE			
7	A	-	SPACE				8	A	-	SPACE			
9	B	*15A/3P					10	B	*15A/3P	AIR SHOWER ROOM E115			
11	C	-					12	C	-	-			
13	A	-					14	A	-	-			
15	B	*15A/3P					16	B	*30A/3P				
17	C	-					18	C	-				
19	A	-					20	A	-				
21	B	*30A/3P					22	B	*30A/3P				
23	C	-					24	C	-				
25	A	-					26	A	-				
27	B	*30A/3P					28	B	*40A/3P				
29	C	-					30	C	-				
31	A	-					32	A	-				
33	B	*100A/3P	OUTSIDE CHILLER				34	B	-	SPACE			
35	C	-	-				36	C	-	SPACE			
37	A	-	-				38	A	-	SPACE			
39	B	-	SPACE				40	B	-	SPACE			
41	C	-	SPACE				42	C	-	SPACE			
SUB TOTAL							SUB TOTAL						

CONNECTED LOAD
A Ø: 0 KVA : ________AMPS — ALL BUS SHALL BE 1000 APSI COPPER
B Ø: 0 KVA : ________AMPS
C Ø: 0 KVA : ________AMPS

ISOLATED GROUND BUS ☐
NEUTRAL BUS ✓
GROUND BUS ✓
SUB FEED BUS ☐

ELECTRICAL PANEL SCHEDULE (TO BE REPLACED) [1]

PANEL 4711-PP0003 (4711-PNL0044) — VOLTAGE 277/480
LOCATION RM. W138 — PHASE 3
MOUNTING FLUSH — WIRE 4
MFR./TYPE SIEMENS — AMPS 225
MAIN BKR MLO — AIC RATING 18K
MAIN FEEDER SIZE 4#4/0, 1#4G - 2-1/2"C — FED FROM 4711-BDP001S

*GFI BREAKERS

CK1	PH	FRAME & AMPS	LOAD DESCRIPTION	KVA LOAD aØ	bØ	cØ	CK1	PH	FRAME & AMPS	LOAD DESCRIPTION	KVA LOAD aØ	bØ	cØ
1	A	*20A/3P	BLAST CABINET #2				2	A	*20A/3P	LATHE W136			
3	B	-	-				4	B	-	-			
5	C	-	-				6	C	-	-			
7	A	*20A/3P	SPARE				8	A	*20A/3P	SPARE			
9	B	-	-				10	B	-	-			
11	C	-	-				12	C	-	-			
13	A	*20A/3P	SPARE				14	A	*30A/3P	BRIDGEPORT MILL			
15	B	-	-				16	B	-	-			
17	C	-	-				18	C	-	-			
19	A	*20A/3P	LATHE				20	A	*20A/3P	SPARE			
21	B	-	-				22	B	-	-			
23	C	-	-				24	C	-	-			
25	A	*20A/3P	SPARE				26	A	*50A/3P	SPARE			
27	B	-	-				28	B	-	-			
29	C	-	-				30	C	-	-			
31	A	-	SPACE				32	A	-	SPACE			
33	B	-	SPACE				34	B	-	SPACE			
35	C	-	SPACE				36	C	-	SPACE			
37	A	-	SPACE				38	A	-	SPACE			
39	B	-	SPACE				40	B	-	SPACE			
41	C	-	SPACE				42	C	-	SPACE			
SUB TOTAL							SUB TOTAL						

CONNECTED LOAD
A Ø: 0 KVA : ________AMPS — ALL BUS SHALL BE 1000 APSI COPPER
B Ø: 0 KVA : ________AMPS
C Ø: 0 KVA : ________AMPS

ISOLATED GROUND BUS ☐
NEUTRAL BUS ✓
GROUND BUS ✓
SUB FEED BUS ☐

PANELBOARD SCHEDULE (TO BE REPLACED) [1]

SWBD 4711-PP0004 (4711-PNL0047) — AMPS: 800 MCB — VOLTS: 120/208 — LOCATION RM. W141
PHASE: 3
FED FROM: 4711-SWBD001 VIA 4711-XFMR0026 — WIRE: 4 — HZ: 60 — AIC: 10K (SYM)
MAIN FEEDER: 2 PARALLEL RUNS 4#500MCM, 1#1/0G - 3-1/2"C — *PANELBOARD SHALL HAVE 45" OF MOUNTING SPACE

SWBD SECTION	LOAD SERVED	SWITCH SIZE	FUSE SIZE	REMARKS	CONNECTED LOAD A (AMPS)	B (AMPS)	C (AMPS)	TOTAL KVA
1	MAIN	800	-	-	-	-	-	-
2	MAIN CONTROL CABINET	70	-	-	-	-	-	-
3	SCR CONTROL CABINET	100	-	-	-	-	-	-
4	SPARE	200	-	-	-	-	-	-
5	SPARE	200	-	-	-	-	-	-
6	SPARE	100	-	-	-	-	-	-
7	SPARE	100	-	-	-	-	-	-
8	SPARE	100	-	-	-	-	-	-
9	SPARE	100	-	-	-	-	-	-
10	SPARE	100	-	-	-	-	-	-

WARNING
DO NOT SCALE THIS DRAWING
THIS DRAWING WAS DESIGNED TO BE PRINTED AT A NASA SHEET SIZE: MSFC STD. SIZE 40" X 28"

ALABAMA REGISTERED No. 26967 PROFESSIONAL ENGINEER JOHN AVERRETT 9/4/15

REV	BY	DATE	REVISION	C.I. NO.	APPROVED

Marshall Space Flight Center
Huntsville, Alabama 35812

BUILDING 4711
REVITALIZE ELECTRICAL SYSTEMS

PANEL SCHEDULES

AE FIRM: GOODWYN | MILLS | CAWOOD — MERRICK & COMPANY — JOINT VENTURE
NASA AE CONTRACT NO. NNM12AA49C NNM14AA72T

SUBMITTED: JENNIFER LANDRY
AE: DATE: 09/15/15
DESIGNED S. CRITTENDEN
DRAWN M. PATE
CHECKED J. AVERRETT
SCALE: AS SHOWN

APPROVAL RECOMMENDED: CODY GOODMAN, AS22 PROJECT A/E
APPROVAL RECOMMENDED: TIM DOSS, AS22 SUPPORT A/E
APPROVAL RECOMMENDED: PHIL HENDRIX, AS22 TEAM LEAD
SPEC. NO. FAC-M5063

APPROVED: NELSON OLINGER
AS22 GROUP LEAD — DATE: 09/15/15

FINAL SUBMITTAL
ISSUED FOR CONSTRUCTION
REF. NO. E707

DRAWING NO.
FAC-CU-4711-E707
SHEET 33 OF 38

5 4 3 2 1

Master Bid Disk 10-06-2015

A | B | C | D | E | F | G

ELECTRICAL PANEL SCHEDULE (TO BE REPLACED)

1

PANEL 4711-PP0005 (4711-PNL0055) — VOLTAGE 277/480
LOCATION RM. W208 (MEZZANINE) — PHASE 3
MOUNTING SURFACE — WIRE 4
MFR./TYPE SIEMENS — AMPS 250
MAIN BKR MLO — AIC RATING 18K
MAIN FEEDER SIZE 4#250MCM, 1#4G - 2-1/2"C — FED FROM 4711-BDP001T

*GFI ALL BREAKERS

CK1	PH	FRAME & AMPS	LOAD DESCRIPTION	KVA LOAD a∅	b∅	c∅	CK1	PH	FRAME & AMPS	LOAD DESCRIPTION	KVA LOAD a∅	b∅	c∅
1	A	*15A/3P	AHU-3				2	A	*15A/3P	AHU-4			
3	B	-	VIA 4711-SSS0006				4	B	-	VIA 4711-SSS0005			
5	C	-	-				6	C	-	-			
7	A	*15A/3P	AHU-6				8	A	*30A/3P	AHU-5			
9	B	-	VIA 4711-SSS0004				10	B	-	VIA 4711-SSS0043			
11	C	-	-				12	C	-	-			
13	A	*15A/3P	SPARE				14	A	*15A/3P	-			
15	B	-	-				16	B	-	-			
17	C	-	-				18	C	-	-			
19	A	50A/3P	AHU-11				20	A	*15A/3P	-			
21	B	-	-				22	B	-	-			
23	C	-	-				24	C	-	-			
25	A	-	SPACE				26	A	*30A/3P	-			
27	B	-	SPACE				28	B	-	-			
29	C	-	SPACE				30	C	-	-			
SUB TOTAL							SUB TOTAL						

CONNECTED LOAD
A ∅ : 0 KVA : _____AMPS
B ∅ : 0 KVA : _____AMPS
C ∅ : 0 KVA : _____AMPS

ALL BUS SHALL BE 1000 APSI COPPER

ISOLATED GROUND BUS ☐
NEUTRAL BUS ✓
GROUND BUS ✓
SUB FEED BUS ☐

PANELBOARD SCHEDULE (NEW)

4

SWBD 4711-PP0006 — AMPS: 800 MCB — VOLTS: 120/208 — LOCATION RM. W175A
PHASE: 3
FED FROM: 4711-SWBD001 VIA 4711-XFMR0002 — WIRE: 4 — HZ: 60 — AIC: 22K (SYM)
MAIN FEEDER: 2 PARALLEL RUNS 4#500MCM, 1#2/0G - 3-1/2"C — *PANELBOARD SHALL HAVE 99" OF MOUNTING SPACE

SWBD SECTION	LOAD SERVED	SWITCH SIZE	FUSE SIZE	REMARKS	CONNECTED LOAD A (AMPS)	B (AMPS)	C (AMPS)	TOTAL KVA
1	MAIN	800	-	-	-	-	-	-
2	4711-RP0059	200	-	-	-	-	-	-
3	4711-RP0031	200	-	-	-	-	-	-
4	4711-RP0015	200	-	-	-	-	-	-
5	4711-RP0014	100	-	-	-	-	-	-
6	4711-RP0013	225	-	-	-	-	-	-
7	4711-RP0016	225	-	-	-	-	-	-
8	4711-RP0049	200	-	-	-	-	-	-
9	4711-RP0003	200	-	-	-	-	-	-
10	4711-RP0004	100	-	-	-	-	-	-
11	4711-RP0033	225	-	-	-	-	-	-
12	4711-PP0007	500	-	-	-	-	-	-
13	4711-STRT0005	20	-	-	-	-	-	-
14	SPARE	225	-	-	-	-	-	-
15	SPARE	200	-	-	-	-	-	-
16	SPARE	200	-	-	-	-	-	-
17	SPARE	200	-	-	-	-	-	-
18	SPARE	100	-	-	-	-	-	-
19	SPARE	100	-	-	-	-	-	-
20	SPARE	100	-	-	-	-	-	-
21	SPARE	100	-	-	-	-	-	-
22	SPARE	100	-	-	-	-	-	-

PANELBOARD SCHEDULE (NEW)

4

PANEL 4711-PP0007 — AMPS: 500 MCB — VOLTS: 120/208 — LOCATION RM. E118
PHASE: 3
FED FROM: 4711-PP0006 — WIRE: 4 — HZ: 60 — AIC: 10K (SYM)
MAIN FEEDER 2 PARALLEL RUNS 4#250MCM, 1#2G - 3"C — * PANELBOARD SHALL HAVE 99" OF MOUNTING SPACE

SWBD SECTION	LOAD SERVED	SWITCH SIZE	FUSE SIZE	REMARKS	CONNECTED LOAD A (AMPS)	B (AMPS)	C (AMPS)	TOTAL KVA
1	MAIN	500	-	-	-	-	-	-
2	4711-RP0019	125	-	-	-	-	-	-
3	4711-RP0020	200	-	-	-	-	-	-
4	4711-RP0024	200	-	-	-	-	-	-
5	4711-XFMR0004	100	-	-	-	-	-	-
6	4711-RP0021	200	-	-	-	-	-	-
7	4711-RP0035	100	-	-	-	-	-	-
8	4711-RP0057	100	-	-	-	-	-	-
9	4711-RP0022	200	-	-	-	-	-	-
10	4711-RP0023	100	-	-	-	-	-	-
11	4711-SS0055	100	-	-	-	-	-	-
12	SPARE	200	-	-	-	-	-	-
13	SPARE	200	-	-	-	-	-	-
14	SPARE	200	-	-	-	-	-	-
15	SPARE	100	-	-	-	-	-	-
16	SPARE	100	-	-	-	-	-	-
17	SPARE	100	-	-	-	-	-	-
18	SPARE	100	-	-	-	-	-	-
19	SPARE	100	-	-	-	-	-	-
20	SPARE	100	-	-	-	-	-	-
21	SPARE	100	-	-	-	-	-	-
22	SPARE	100	-	-	-	-	-	-
23	SPARE	100	-	-	-	-	-	-

PLAN NOTES

1. REPLACE EXISTING PANEL WITH NEW PANEL AS SHOWN.
2. EXISTING PANEL TO REMAIN, NO WORK AT THIS TIME.
3. NOT USED.
4. NEW PANEL OR SWITCHBOARD TO BE INSTALLED.

GENERAL NOTES

1. EXISTING CONTROL WIRES SHALL BE RECONNECTED TO NEW STARTER OR DISCONNECT STARTER. CONTRACTOR SHALL ENSURE PROPER WORKING SYSTEM AFTER STARTER OR DISCONNECT STARTER HAS BEEN INSTALLED.

ELECTRICAL PANEL SCHEDULE (NEW)

4

PANEL 4711-PP0008 — VOLTAGE 120/208
LOCATION OUTSIDE RM. W134 — PHASE 3
MOUNTING SURFACE — WIRE 4
MFR./TYPE SQUARE D — AMPS 400
MAIN BKR 400A — AIC RATING 22K
MAIN FEEDER SIZE 4#500MCM, 1#3G - 3-1/2"C — FED FROM 4711-BDP02AG

CK1	PH	FRAME & AMPS	LOAD DESCRIPTION	KVA LOAD a∅	b∅	c∅	CK1	PH	FRAME & AMPS	LOAD DESCRIPTION	KVA LOAD a∅	b∅	c∅
1	A	225A/3P	4711-RP0002				2	A	225A/3P	4711-RP0008			
3	B	-	-				4	B	-	-			
5	C	-	-				6	C	-	-			
7	A	225A/3P	4711-RP0006				8	A	100A/3P	SPARE			
9	B	-	-				10	B	-	-			
11	C	-	-				12	C	-	-			
13	A	100A/3P	SPARE				14	A	225A/3P	SPARE			
15	B	-	-				16	B	-	-			
17	C	-	-				18	C	-	-			
19	A	100A/3P	SPARE				20	A	225A/3P	SPARE			
21	B	-	-				22	B	-	-			
23	C	-	-				24	C	-	-			
25	A	70A/3P	SPARE				26	A	70A/3P	SPARE			
27	B	-	-				28	B	-	-			
29	C	-	-				30	C	-	-			
31	A	50A/3P	SPARE				32	A	50A/3P	SPARE			
33	B	-	-				34	B	-	-			
35	C	-	-				36	C	-	-			
37	A	30A/3P	SPARE				38	A	30A/3P	SPARE			
39	B	-	-				40	B	-	-			
41	C	-	-				42	C	-	-			
SUB TOTAL							SUB TOTAL						

CONNECTED LOAD
A ∅ : 0 KVA : _____AMPS
B ∅ : 0 KVA : _____AMPS
C ∅ : 0 KVA : _____AMPS

ALL BUS SHALL BE 1000 APSI COPPER

ISOLATED GROUND BUS ☐
NEUTRAL BUS ✓
GROUND BUS ✓
SUB FEED BUS ☐

SWITCHBOARD SCHEDULE (TO BE REPLACED)

1

SWBD 4711-SWBD0001 — AMPS: 1200 — VOLTS: 277/480 — LOCATION RM. W139
PHASE: 3 — WIRE: 4 — HZ: 60 — AIC: 65K (SYM)
*SWITCHBOARD SHALL HAVE 99" OF MOUNTING SPACE

SWBD SECTION	LOAD SERVED	SWITCH SIZE	FUSE SIZE	REMARKS	CONNECTED LOAD A (AMPS)	B (AMPS)	C (AMPS)	TOTAL KVA
1	MAIN	1200	-	-	-	-	-	-
2	NEW 1000A BUS DUCT	1000	-	-	-	-	-	-
3	4711-SS0040	500	-	-	-	-	-	-
4	4711-SS0126	400	-	-	-	-	-	-
5	4711-XFMR0026	500	-	-	-	-	-	-
6	4711-XFMR0027	400	-	-	-	-	-	-
7	SPARE	400	-	-	-	-	-	-
8	SPARE	200	-	-	-	-	-	-
9	SPARE	200	-	-	-	-	-	-
10	SPARE	200	-	-	-	-	-	-
11	SPARE	200	-	-	-	-	-	-
12	SPARE	100	-	-	-	-	-	-
13	SPARE	100	-	-	-	-	-	-
14	SPARE	100	-	-	-	-	-	-
15	SPARE	100	-	-	-	-	-	-
16	SPARE	100	-	-	-	-	-	-
17	SPARE	100	-	-	-	-	-	-
18	SPARE	100	-	-	-	-	-	-

Maximo Number	Required Action	Volts	Size	Phase	Location
#4711-CBS0001	Existing circuit breaker starter is considered in good condition and will remain. Provide labeling with Maximo number and feed location.	208	30	3	COL LINE H-7
#4711-SSS0001	Existing starter is considered in good condition and will remain. Provide labeling with Maximo number and feed location.	240	0	3	COL LINE B-10
#4711-SSS0002	Remove existing starter and install new starter. Provide labeling with Maximo number and feed location	600	0	3	COL LINE B-11.5
#4711-SSS0003	Remove existing starter and install new starter. Provide labeling with Maximo number and feed location	600	0	3	COL LINE B-11.5
#4711-SSS0004	Existing starter is considered in good condition and will remain. Provide labeling with Maximo number and feed location	600	0	3	COL LINE D-6
#4711-SSS0005	Existing starter is considered in good condition and will remain. Provide labeling with Maximo number and feed location	600	0	3	COL LINE C-5
#4711-SSS0006	Existing starter is considered in good condition and will remain. Provide labeling with Maximo number and feed location	600	0	3	COL LINE C-5
#4711-SSS0007	Remove existing starter and install new starter. Provide labeling with Maximo number and feed location.	600	0	3	COL LINE H-6
#4711-SSS0008	Existing starter is considered in good condition and will remain. Provide labeling with Maximo number and feed location.	600	0	3	COL LINE I-4.5
#4711-SSS0009	New starter disconnect combo replacing 4711-STRT0020 and 4711-SS0142. Provide labeling with Maximo number and feed location.	600	0	3	COL LINE B-12.9
#4711-SSS0010	New starter disconnect combo replacing 4711-STRT0025 and 4711-SS0008. Provide labeling with Maximo number and feed location.	600	0	3	COL LINE D-12.9
#4711-SSS0011	New starter disconnect combo replacing 4711-STRT0014 and 4711-SS0109. Provide labeling with Maximo number and feed location.	600	0	3	COL LINE G-12
#4711-SSS0012	New starter disconnect combo replacing 4711-STRT0017 and 4711-SS0118. Provide labeling with Maximo number and feed location.	600	0	3	COL LINE I-11
#4711-SSS0013	New starter disconnect combo replacing 4711-STRT0018 and 4711-SS0122. Provide labeling with Maximo number and feed location.	600	0	3	COL LINE I-9.5
#4711-SSS0014	New starter disconnect combo replacing 4711-STRT0003 and 4711-SS0032. Provide labeling with Maximo number and feed location.	600	0	3	COL LINE C-8
#4711-SSS0015	New starter disconnect combo replacing 4711-STRT0004 and 4711-SS0039. Provide labeling with Maximo number and feed location.	600	0	3	COL LINE F-7.5
#4711-SSS0016	New starter disconnect combo replacing 4711-STRT0001 and 4711-SS0005. Provide labeling with Maximo number and feed location.	600	0	3	COL LINE C-5
#4711-SSS0017	New starter disconnect combo replacing 4711-STRT0011 and 4711-SS0066. Provide labeling with Maximo number and feed location.	600	0	3	COL LINE G-5
#4711-STRT0001	Existing starter to be replaced with combination starter disconnect. Combine with 4711-SS0005. Provide labeling with Maximo number and feed location.	600	0	3	COL LINE C-5
#4711-STRT0002	Remove existing starter and install new starter. Provide labeling with Maximo number and feed location.	600	0	3	COL LINE C-11
#4711-STRT0003	Existing starter to be replaced with combination starter disconnect. Combine with 4711-SS0032. Provide labeling with Maximo number and feed location.	600	0	3	COL LINE C-8
#4711-STRT0004	Existing starter to be replaced with combination starter disconnect. Combine with 4711-SS0039. Provide labeling with Maximo number and feed location.	600	0	3	COL LINE F-7.5
#4711-STRT0005	Remove existing starter and install new starter. Provide labeling with Maximo number and feed location.	600	0	3	COL LINE F-6

Maximo Number	Required Action	Volts	Size	Phase	Location
#4711-STRT0006	Existing starter to be removed. Remove all associated wire and conduit.	600	0	3	COL LINE D-6
#4711-STRT0007	Remove existing starter and install new starter. Provide labeling with Maximo number and feed location.	600	0	3	COL LINE H-7
#4711-STRT0008	Remove existing starter and install new starter. Provide labeling with Maximo number and feed location.	600	0	3	COL LINE H-7
#4711-STRT0009	Remove existing starter and install new starter. Provide labeling with Maximo number and feed location.	600	0	3	COL LINE H-7
#4711-STRT0010	Remove existing starter and install new starter. Provide labeling with Maximo number and feed location.	600	0	3	COL LINE G-5.5
#4711-STRT0011	Existing starter to be replaced with combination starter disconnect. Combine with 4711-SS0066. Provide labeling with Maximo number and feed location.	600	0	3	COL LINE G-5
#4711-STRT0012	Remove existing starter and install new starter. Provide labeling with Maximo number and feed location.	600	0	3	COL LINE D-6
#4711-STRT0013	Remove existing starter and install new starter. Provide labeling with Maximo number and feed location.	600	0	3	COL LINE H-10
#4711-STRT0014	Existing starter to be replaced with combination starter disconnect. Combine with 4711-SS0109. Provide labeling with Maximo number and feed location.	600	0	3	COL LINE G-12
#4711-STRT0015	Remove existing starter and install new starter. Provide labeling with Maximo number and feed location.	600	0	3	COL LINE C-12
#4711-STRT0016	Remove existing starter and install new starter. Provide labeling with Maximo number and feed location.	600	0	3	COL LINE C-12
#4711-STRT0017	Existing starter to be replaced with combination starter disconnect. Combine with 4711-SS0118. Provide labeling with Maximo number and feed location.	600	0	3	COL LINE I-11
#4711-STRT0018	Existing starter to be replaced with combination starter disconnect. Combine with 4711-SS0122. Provide labeling with Maximo number and feed location.	600	0	3	COL LINE I-9.5
#4711-STRT0019	Remove existing starter and install new starter. Provide labeling with Maximo number and feed location.	600	0	3	COL LINE I-9
#4711-STRT0020	Existing starter to be replaced with combination starter disconnect. Combine with 4711-SS0142. Provide labeling with Maximo number and feed location.	600	0	3	COL LINE B-12.9
#4711-STRT0021	Existing starter to be removed. Remove all associated wire and conduit.	600	0	3	COL LINE C-12
#4711-STRT0022	Existing starter to be removed. Remove all associated wire and conduit.	600	0	3	COL LINE B-12
#4711-STRT0023	Existing starter to be removed. Remove all associated wire and conduit.	600	0	3	COL LINE C-12
#4711-STRT0024	Existing starter to be removed. Remove all associated wire and conduit.	600	0	3	COL LINE C-12
#4711-STRT0025	Existing starter to be replaced with combination starter disconnect. Combine with 4711-SS0008. Provide labeling with Maximo number and feed location.	240	0	3	COL LINE D-12.9
#4711-STRT0026	Existing starter to be removed. Remove all associated wire and conduit.	600	0	3	COL LINE C-12
#4711-STRT0029	Existing starter to be removed. Remove all associated wire and conduit.	600	0	3	COL LINE B-12
#4711-STRT0030	Existing starter to be removed. Remove all associated wire and conduit.	600	0	3	COL LINE G-11

MAXIMO # 4711-PP0005 (4711-PNL0055)	MAXIMO # 4711-PP0006	MAXIMO # 4711-PP0007
MAXIMO # 4711-PP0008	STARTER SCHEDULES	
MAXIMO # 4711-SWBD0001		

SCHEDULE PLAN

NOT TO SCALE

WARNING
DO NOT SCALE THIS DRAWING
THIS DRAWING WAS DESIGNED TO BE PRINTED AT A NASA SHEET SIZE: MSFC STD. SIZE 40" X 28"

ALABAMA REGISTERED No. 26967 PROFESSIONAL ENGINEER JOHN AVERRETT 9/14/15

REV	BY	DATE	REVISION	C.I. NO.	APPROVED

Marshall Space Flight Center
Huntsville, Alabama 35812

BUILDING 4711
REVITALIZE ELECTRICAL SYSTEMS

PANEL, SWITCHBOARD, & STARTERS SCHEDULES

AE FIRM: GOODWYN | MILLS | CAWOOD — MERRICK & COMPANY — JOINT VENTURE

NASA AE CONTRACT NO. NNM12AA49C NNM14AA72T

SUBMITTED: JENNIFER LANDRY — AE: DATE: 09/15/15
DESIGNED S. CRITTENDEN
DRAWN M. PATE
CHECKED J. AVERRETT
SCALE: AS SHOWN

APPROVAL RECOMMENDED: CODY GOODMAN, AS22 PROJECT A/E
APPROVAL RECOMMENDED: TIM DOSS, AS22 SUPPORT A/E
APPROVAL RECOMMENDED: PHIL HENDRIX, AS22 TEAM LEAD
SPEC. NO. FAC-M5063

APPROVED: NELSON OLINGER — AS22 GROUP LEAD — DATE: 09/15/15

DRAWING NO. FAC-CU-4711-E708
SHEET 34 OF 38

FINAL SUBMITTAL
ISSUED FOR CONSTRUCTION
REF. NO. E708

Maximo Number	Required Action	Volts	Amps	Fuse	Phase	Location
#4711-CBP0001	Remove existing circuit breaker and install new circuit breaker to match existing. Provide labeling with Maximo number and feed location.	480	225	CB	3	COL. LINE B-12
#4711-CBP0002	Remove existing circuit breaker and associated wiring and devices.	208	400	CB	3	COL. LINE F-6
#4711-CBP0003	Remove existing circuit breaker and install new circuit breaker. Provide labeling with Maximo number and feed location.	208	600	CB	3	COL. LINE A-13
#4711-CBP0004	Remove existing circuit breaker and associated wiring and devices.	208	400	CB	3	COL. LINE E-6
#4711-CBP0005	Remove existing circuit breaker and associated wiring and devices.	208	15	CB	1	COL. LINE C-6
#4711-CBP0006	Remove existing circuit breaker and install new circuit breaker to match existing. Provide labeling with Maximo number and feed location.	208	80	CB	1	COL. LINE H-2.5
#4711-CBP0007	Remove existing circuit breaker and install new circuit breaker to match existing. Provide labeling with Maximo number and feed location.	208	80	CB	1	COL. LINE H-2.5
#4711-CBP0008	Remove existing circuit breaker and install new circuit breaker to match existing. Provide labeling with Maximo number and feed location.	208	80	CB	1	COL. LINE H-2.5
#4711-CBP0009	Remove existing circuit breaker and install new circuit breaker to match existing. Provide labeling with Maximo number and feed location.	208	80	CB	1	COL. LINE H-2.5
#4711-CBP0010	Remove existing circuit breaker and associated wiring and devices.	480	125	CB	1	COL. LINE G-7
#4711-CBP0011	Existing circuit breaker to remain. Provide labeling with Maximo number and feed location.	208	60	CB	3	COL. LINE H-1.5
#4711-CBP0012	Existing circuit breaker to remain. Provide labeling with Maximo number and feed location.	208	60	CB	3	COL. LINE H-1.5
#4711-CBP0013	Existing circuit breaker to remain. Provide labeling with Maximo number and feed location.	208	50	CB	1	COL. LINE H-1.5
#4711-CBP0014	Existing circuit breaker to remain. Provide labeling with Maximo number and feed location.	208	60	CB	1	COL. LINE I-2
#4711-CBP0015	Existing circuit breaker to remain. Provide labeling with Maximo number and feed location.	208	60	CB	1	COL. LINE I-2
#4711-SS0001	Remove existing disconnect and install new heavy duty disconnect in a new location. Provide labeling with Maximo number and feed location.	240	30	UN	3	COL. LINE A-1
#4711-SS0002	Remove existing disconnect and install new heavy duty disconnect. Provide labeling with Maximo number and feed location.	240	30	UN	1	COL. LINE A-5
#4711-SS0003	Remove existing disconnect and associated wire and device.	600	60	NF	3	COL. LINE C-7.5
#4711-SS0004	Remove existing disconnect and install new heavy duty disconnect. Provide labeling with Maximo number and feed location.	240	60	UN	3	COL. LINE C-8
#4711-SS0005	Remove existing disconnect and replace with combination starter disconnect. Combine with 4711-STRT0001. Provide labeling with Maximo number and feed location.	240	30	UN	3	COL. LINE C-5
#4711-SS0006	Remove existing disconnect and install new heavy duty disconnect. Provide labeling with Maximo number and feed location.	600	30	UN	3	COL. LINE D-12
#4711-SS0007	Remove existing disconnect and install new heavy duty disconnect. Provide labeling with Maximo number and feed location.	600	30	UN	3	COL. LINE D-12
#4711-SS0008	Remove existing disconnect and replace with combination starter disconnect. Combine with 4711-SSS0010. Provide labeling with Maximo number and feed location.	600	30	UN	3	COL. LINE D-12.9
#4711-SS008A	Remove existing disconnect and associated wire and device.	240	60	UN	3	COL. LINE B-6
#4711-SS0009	Existing disconnect to remain. Provide labeling with Maximo number and feed location.	240	30	NF	3	COL. LINE D-12.9
#4711-SS0010	Remove existing disconnect and install new heavy duty disconnect. Provide labeling with Maximo number and feed location.	240	100	NF	3	COL. LINE A-8
#4711-SS0011	Remove existing disconnect and install new heavy duty disconnect. Provide labeling with Maximo number and feed location.	240	30	F	3	COL. LINE B-11
#4711-SS0012	Remove existing disconnect and install new heavy duty disconnect. Provide labeling with Maximo number and feed location.	600	30	F	3	COL. LINE A-11
#4711-SS0013	Remove disconnect and re-feed from 4711-SS0014	240	30	F	3	COL. LINE A-10
#4711-SS0014	Remove existing disconnect and install new heavy duty disconnect in a new location. Provide labeling with Maximo number and feed location.	240	30	F	3	COL. LINE A-10
#4711-SS0015	Remove existing disconnect and install new heavy duty disconnect. Provide labeling with Maximo number and feed location.	600	30	UN	3	COL. LINE B-11

Maximo Number	Required Action	Volts	Amps	Fuse	Phase	Location
#4711-SS0016	Remove existing disconnect and associated wire and device.	600	200	NF	3	COL. LINE B-11
#4711-SS0017	Remove existing disconnect and install new heavy duty disconnect. Provide labeling with Maximo number and feed location.	600	30	F	3	COL. LINE B-11.5
#4711-SS0018	Remove existing disconnect and install new heavy duty disconnect. Provide labeling with Maximo number and feed location.	600	60	UN	3	COL. LINE B-12
#4711-SS0019	Remove existing disconnect and install new heavy duty disconnect. Provide labeling with Maximo number and feed location.	600	60	UN	3	COL. LINE B-12
#4711-SS0020	Remove existing disconnect and install new heavy duty disconnect. Provide labeling with Maximo number and feed location.	600	30	UN	3	COL. LINE C-12
#4711-SS0021	Remove existing disconnect and install new N3R heavy duty disconnect. Provide labeling with Maximo number and feed location.	240	30	NF	3	COL. LINE D-1
#4711-SS0022	Remove existing disconnect and install new heavy duty disconnect. Provide labeling with Maximo number and feed location.	240	30	20	3	COL. LINE D-12
#4711-SS0023	Remove existing disconnect and associated wire and device.	600	200	200	3	COL. LINE D-11.5
#4711-SS0024	Remove existing disconnect and install new heavy duty disconnect. Provide labeling with Maximo number and feed location.	240	60	UN	3	COL. LINE C-11
#4711-SS0025	Remove existing disconnect and install new heavy duty disconnect. Provide labeling with Maximo number and feed location.	240	30	F	3	COL. LINE C-11
#4711-SS0026	Remove existing disconnect and associated wire and device.	240	30	UN	3	COL. LINE C-11
#4711-SS0027	Remove existing disconnect and associated wire and device.	240	60	UN	3	COL. LINE C-12
#4711-SS0028	Disconnect is not currently used.	-	-	-	-	HALL AT RM. W134
#4711-SS0029	Remove existing disconnect and install new heavy duty disconnect. Provide labeling with Maximo number and feed location.	600	30	UN	3	COL. LINE B-12
#4711-SS0030	Remove existing disconnect and install new heavy duty disconnect. Provide labeling with Maximo number and feed location.	600	30	UN	3	COL. LINE B-12
#4711-SS0031	Remove existing disconnect and install new heavy duty disconnect. Provide labeling with Maximo number and feed location.	600	60	UN	3	COL. LINE C-9
#4711-SS0032	Remove existing disconnect and replace with combination starter disconnect. Combine with 4711-STRT0003. Provide labeling with Maximo number and feed location.	600	30	UN	3	COL. LINE C-8
#4711-SS0033	Remove existing disconnect and install new heavy duty disconnect. Provide labeling with Maximo number and feed location.	600	100	UN	3	COL. LINE C-9.5
#4711-SS0034	Remove existing disconnect and install new heavy duty disconnect. Provide labeling with Maximo number and feed location.	240	30	20	1	COL. LINE C-9.5
#4711-SS0035	Remove existing disconnect and install new heavy duty disconnect. Provide labeling with Maximo number and feed location.	600	60	UN	3	COL. LINE E-8
#4711-SS0036	Remove existing circuit breaker and all wire associated with it.	240	200	NF	3	COL. LINE F-8
#4711-SS0037	Remove existing disconnect and install new heavy duty disconnect. Provide labeling with Maximo number and feed location.	240	30	NF	3	COL. LINE F-8
#4711-SS0038	Remove existing disconnect and associated wire and device.	600	200	NF	3	COL. LINE F-8
#4711-SS0039	Remove existing disconnect and replace with combination starter disconnect. Combine with 4711-SSS0015. Provide labeling with Maximo number and feed location.	600	30	UN	3	COL. LINE F-7.5
#4711-SS0040	Remove existing disconnect and install new heavy duty disconnect. Provide labeling with Maximo number and feed location.	600	600	600	3	COL. LINE E-6
#4711-SS0041	Remove existing circuit breaker and all wire associated with it.	240	200	200	3	COL. LINE E-6
#4711-SS0042	Remove existing circuit breaker and all wire associated with it.	240	60	60	3	COL. LINE E-6
#4711-SS0043	Remove existing disconnect and install new heavy duty disconnect. Provide labeling with Maximo number and feed location.	600	30	30	3	COL. LINE C-6
#4711-SS0044	Remove existing circuit breaker and all wire associated with it.	240	200	200	3	COL. LINE C-6
#4711-SS0045	Existing disconnect to remain. Provide labeling with Maximo number and feed location.	600	200	NF	3	MEZZANINE COL. LINE E-6
#4711-SS0046	Existing disconnect to remain. Provide labeling with Maximo number and feed location.	600	200	NF	3	MEZZANINE COL. LINE E-6

Maximo Number	Required Action	Volts	Amps	Fuse	Phase	Location
#4711-SS0047	Remove existing disconnect and install new heavy duty disconnect. Provide labeling with Maximo number and feed location.	600	30	NF	3	MEZZANINE COL. LINE C-5
#4711-SS0048	Remove existing disconnect and install new heavy duty disconnect. Provide labeling with Maximo number and feed location.	600	30	NF	3	MEZZANINE COL. LINE C-5
#4711-SS0049	Disconnect is not currently used.	-	-	-	-	OUTSIDE SOUTH AT PROCESS CHILLER
#4711-SS0050	Remove existing disconnect and install new N3R heavy duty disconnect. Provide labeling with Maximo number and feed location.	600	100	UN	3	COL. LINE I-4
#4711-SS0051	Disconnect was not located and assumed to be removed.	-	-	-	-	ROOM E114
#4711-SS0052	Remove existing circuit breaker and all wire associated with it.	240	60	F	3	COL. LINE H-4
#4711-SS0053	Remove existing circuit breaker and all wire associated with it.	240	30	F	3	COL. LINE H-4
#4711-SS0054	Remove existing circuit breaker and all wire associated with it.	600	200	NF	3	COL. LINE H-4
#4711-SS0055	Remove existing disconnect and install new heavy duty disconnect in a new location. Provide labeling with Maximo number and feed location.	600	100	UN	1	COL. LINE H-4
#4711-SS0056	Remove existing disconnect and install new heavy duty disconnect. Provide labeling with Maximo number and feed location.	240	30	F	3	COL. LINE D-6
#4711-SS0057	Remove existing disconnect and associated wire and device.	600	30	NF	3	COL. LINE I-3
#4711-SS0058	Remove existing disconnect and install new heavy duty disconnect. Provide labeling with Maximo number and feed location.	240	30	UN	1	COL. LINE H-4
#4711-SS0059	Remove existing disconnect and install new heavy duty disconnect. Provide labeling with Maximo number and feed location.	240	30	UN	1	COL. LINE H-4
#4711-SS0060	Remove existing disconnect and install new heavy duty disconnect. Provide labeling with Maximo number and feed location.	600	30	NF	3	COL. LINE B-11
#4711-SS0061	Remove existing disconnect and install new heavy duty disconnect. Provide labeling with Maximo number and feed location.	240	30	UN	1	COL. LINE G-6
#4711-SS0062	Remove existing disconnect and install new heavy duty disconnect. Provide labeling with Maximo number and feed location.	240	30	UN	1	COL. LINE H-6
#4711-SS0063	Remove existing disconnect and install new heavy duty disconnect. Provide labeling with Maximo number and feed location.	240	30	UN	3	COL. LINE G-5.5
#4711-SS0064	Existing disconnect to remain. Provide labeling with Maximo number and feed location.	600	30	UN	3	COL. LINE G-5.5
#4711-SS0065	Remove existing disconnect and install new heavy duty disconnect. Provide labeling with Maximo number and feed location.	600	30	NF	3	COL. LINE G-5.5
#4711-SS0066	Remove existing disconnect and replace with combination starter disconnect. Combine with 4711-SSS0017. Provide labeling with Maximo number and feed location.	600	30	NF	3	COL. LINE G-5
#4711-SS0067	Disconnect was not located and assumed to be removed.	-	-	-	-	ROOM W108
#4711-SS0070	Remove existing disconnect and install new heavy duty disconnect. Provide labeling with Maximo number and feed location.	240	30	UN	3	COL. LINE F-9
#4711-SS0071	Remove existing disconnect and install new heavy duty disconnect. Provide labeling with Maximo number and feed location.	600	200	UN	3	COL. LINE F-9
#4711-SS0072	Remove existing circuit breaker and all wire associated with it.	600	60	45	3	COL. LINE F-10
#4711-SS0073	Remove existing disconnect and install new heavy duty disconnect. Provide labeling with Maximo number and feed location. Contractor to upgrade crane connection to remove hazard.	240	30	UN	3	COL. LINE E-10
#4711-SS0074	Remove existing disconnect and install new heavy duty disconnect. Provide labeling with Maximo number and feed	240	30	UN	3	COL. LINE F-10
#4711-SS0075	Remove existing disconnect and install new heavy duty disconnect. Provide labeling with Maximo number and feed location.	600	30	NF	3	COL. LINE E-12
#4711-SS0078	Remove existing disconnect and install new heavy duty disconnect. Provide labeling with Maximo number and feed location.	600	400	UN	3	COL. LINE F-11
#4711-SS0079	Remove existing disconnect and install new heavy duty disconnect. Provide labeling with Maximo number and feed location.	240	200	UN	3	COL. LINE F-11
#4711-SS0080	Remove existing disconnect and install new heavy duty disconnect. Provide labeling with Maximo number and feed location.	600	30	UN	3	COL. LINE F-11
#4711-SS0081	Remove existing disconnect and install new heavy duty disconnect. Provide labeling with Maximo number and feed location.	600	200	UN	3	COL. LINE F-9

Maximo Number	Required Action	Volts	Amps	Fuse	Phase	Location
#4711-SS0082	Remove existing disconnect and install new heavy duty disconnect. Provide labeling with Maximo number and feed location.	240	200	UN	3	COL. LINE F-9
#4711-SS082A	Remove existing disconnect and install new heavy duty disconnect. Provide labeling with Maximo number and feed location.	240	30	UN	3	COL. LINE F-9
#4711-SS0083	Remove existing disconnect and install new heavy duty disconnect. Provide labeling with Maximo number and feed location.	600	200	UN	3	COL. LINE F-9
#4711-SS0084	Remove existing disconnect and install new heavy duty disconnect. Provide labeling with Maximo number and feed location.	240	30	UN	3	COL. LINE G-8
#4711-SS0085	Remove existing disconnect and install new heavy duty disconnect. Provide labeling with Maximo number and feed location.	240	200	UN	3	COL. LINE G-9
#4711-SS0086	Remove existing disconnect and install new heavy duty disconnect. Provide labeling with Maximo number and feed location.	240	30	UN	3	COL. LINE G-9
#4711-SS0087	Remove existing disconnect and install new heavy duty disconnect. Provide labeling with Maximo number and feed location.	600	200	UN	3	COL. LINE G-9
#4711-SS0088	Existing disconnect to remain. Provide labeling with Maximo number and feed location.	240	30	UN	3	COL. LINE G-10
#4711-SS0089	Remove existing disconnect and install new heavy duty disconnect. Provide labeling with Maximo number and feed location.	240	200	UN	3	COL. LINE G-10
#4711-SS0090	Remove existing disconnect and install new heavy duty disconnect. Provide labeling with Maximo number and feed location.	240	30	UN	3	COL. LINE G-10
#4711-SS0091	Remove existing disconnect and install new heavy duty disconnect. Provide labeling with Maximo number and feed location.	600	200	NF	3	COL. LINE G-10
#4711-SS0092	Remove existing disconnect and install new heavy duty disconnect. Provide labeling with Maximo number and feed location.	240	200	UN	3	COL. LINE H-8
#4711-SS0093	Remove existing disconnect and install new heavy duty disconnect. Provide labeling with Maximo number and feed location.	240	30	UN	3	COL. LINE H-8
#4711-SS0094	Remove existing disconnect and install new heavy duty disconnect. Provide labeling with Maximo number and feed location.	600	200	F	3	COL. LINE H-8
#4711-SS0095	Remove existing disconnect and install new heavy duty disconnect. Provide labeling with Maximo number and feed location.	600	60	F	3	COL. LINE H-8
#4711-SS0096	Remove existing disconnect and install new heavy duty disconnect. Provide labeling with Maximo number and feed location.	240	60	F	3	COL. LINE H-8
#4711-SS0097	Remove existing disconnect and install new heavy duty disconnect. Provide labeling with Maximo number and feed location.	240	200	NF	3	COL. LINE H-9
#4711-SS0098	Remove existing disconnect and install new heavy duty disconnect. Provide labeling with Maximo number and feed location.	600	30	NF	3	COL. LINE H-9
#4711-SS0099	Remove existing disconnect and install new heavy duty disconnect. Provide labeling with Maximo number and feed location.	600	200	F	3	COL. LINE H-9
#4711-SS0100	Disconnect is not currently used.	-	-	-	-	RM. W140 EAST COLM.
#4711-SS0101	Remove existing disconnect and associated wire and device.	240	30	UN	3	COL. LINE I-6
#4711-SS0102	Remove existing disconnect and associated wire and device.	600	200	NF	3	COL. LINE H-10
#4711-SS0103	Remove existing disconnect and associated wire and device.	240	30	NF	3	COL. LINE H-10
#4711-SS0104	Remove existing disconnect and associated wire and device.	600	200	NF	3	COL. LINE H-10
#4711-SS0105	Remove existing disconnect and install new heavy duty disconnect. Provide labeling with Maximo number and feed location.	600	200	F	3	COL. LINE H-10
#4711-SS0106	Remove existing disconnect and install new heavy duty disconnect. Provide labeling with Maximo number and feed location.	600	30	30	3	COL. LINE H-12
#4711-SS0107	Existing disconnect to remain. Provide labeling with Maximo number and feed location.	240	60	NF	3	COL. LINE H-12
#4711-SS0108	Remove existing disconnect and install new heavy duty disconnect. Provide labeling with Maximo number and feed location.	600	30	20	3	COL. LINE G-12
#4711-SS0109	Remove existing disconnect and replace with combination starter disconnect. Combine with 4711-SSS0011. Provide labeling with Maximo number and feed location.	600	30	30	3	COL. LINE G-12
#4711-SS0110	Remove existing disconnect and install new heavy duty disconnect. Provide labeling with Maximo number and feed location.	600	30	30	3	COL. LINE G-12

FINAL SUBMITTAL
ISSUED FOR CONSTRUCTION

REF. NO. E801

WARNING
DO NOT SCALE THIS DRAWING
THIS DRAWING WAS DESIGNED TO BE PRINTED AT A NASA SHEET SIZE: MSFC STD. SIZE 40" X 28"

LABAMA REGISTERED No. 26967 PROFESSIONAL ENGINEER JOHN AVERRETT 9/4/15

REV	BY	DATE	REVISION	C.I. NO.	APPROVED

Marshall Space Flight Center
Huntsville, Alabama 35812

BUILDING 4711
REVITALIZE ELECTRICAL SYSTEMS

DISCONNECT SCHEDULES

AE FIRM: GOODWYN | MILLS | CAWOOD — MERRICK & COMPANY — JOINT VENTURE

NASA AE CONTRACT NO. NNM12AA49C NNM14AA72T

SUBMITTED: JENNIFER LANDRY
AE: DATE: 09/15/15
DESIGNED S. CRITTENDEN
DRAWN M. PATE
CHECKED J. AVERRETT
SCALE: AS SHOWN

APPROVAL RECOMMENDED: CODY GOODMAN, AS22 PROJECT A/E
APPROVAL RECOMMENDED: TIM DOSS, AS22 SUPPORT A/E
APPROVAL RECOMMENDED: PHIL HENDRIX, AS22 TEAM LEAD
SPEC. NO. FAC-M5063

APPROVED: NELSON OLINGER, AS22 GROUP LEAD DATE: 09/15/15

DRAWING NO. FAC-CU-4711-E801
SHEET 35 OF 38

Maximo Number	Required Action	Volts	Amps	Fuse	Phase	Location
#4711-SS0111	Remove existing disconnect and install new heavy duty disconnect. Provide labeling with Maximo number and feed location.	600	30	30	3	COL. LINE G-12
#4711-SS0112	Disconnect is not currently used.	-	-	-	-	RM. W140-E. COLM. REAR
#4711-SS0115	Remove existing disconnect and associated wire and device.	240	30	15	3	COL. LINE I-11.5
#4711-SS0116	Remove existing disconnect and install new heavy duty disconnect. Provide labeling with Maximo number and feed location.	600	30	NF	3	COL. LINE I-11.5
#4711-SS0117	Remove existing disconnect and install new heavy duty disconnect. Provide labeling with Maximo number and feed location.	600	30	NF	3	COL. LINE I-11.5
#4711-SS0118	Remove existing disconnect and replace with combination starter disconnect. Combine with 4711-SSS0012. Provide labeling with Maximo number and feed location.	240	30	20	3	COL. LINE I-11
#4711-SS0119	Remove existing disconnect and install new heavy duty disconnect. Provide labeling with Maximo number and feed location.	600	30	30	3	COL. LINE I-10.5
#4711-SS0120	Remove existing disconnect and install new heavy duty disconnect. Provide labeling with Maximo number and feed location.	600	30	30	3	COL. LINE I-10
#4711-SS0121	Remove existing disconnect and install new heavy duty disconnect. Provide labeling with Maximo number and feed location.	600	30	20	3	COL. LINE I-10
#4711-SS0122	Remove existing disconnect and replace with combination starter disconnect. Combine with 4711-SSS0013. Provide labeling with Maximo number and feed location.	600	30	20	3	COL. LINE I-9.5
#4711-SS0123	Remove existing disconnect and install new heavy duty disconnect. Provide labeling with Maximo number and feed location.	600	30	20	3	COL. LINE I-9
#4711-SS0124	Remove existing disconnect and install new heavy duty disconnect. Provide labeling with Maximo number and feed location.	240	30	20	3	COL. LINE H-8.5
#4711-SS0125	Remove existing disconnect and install new heavy duty disconnect. Provide labeling with Maximo number and feed	600	30	NF	3	COL. LINE H-7.5
#4711-SS0126	Remove existing disconnect and install new heavy duty disconnect. Provide labeling with Maximo number and feed	600	400	UN	3	COL. LINE G-7
#4711-SS0127	Remove existing disconnect and install new heavy duty disconnect. Provide labeling with Maximo number and feed	600	60	NF	3	COL. LINE I-9.5
#4711-SS0128	Remove existing disconnect and install new heavy duty disconnect. Provide labeling with Maximo number and feed location. Contractor to correct grounding lug.	600	60	NF	3	COL. LINE I-9.5
#4711-SS0129	Remove existing disconnect and install new heavy duty disconnect. Provide labeling with Maximo number and feed location.	240	30	NF	3	COL. LINE I-7.5
#4711-SS0130	Remove existing disconnect and install new heavy duty disconnect. Provide labeling with Maximo number and feed location.	240	60	UN	3	COL. LINE I-8
#4711-SS0131	Remove existing disconnect and associated wire and device.	600	60	NF	3	COL. LINE I-8
#4711-SS0132	Remove existing disconnect and install new heavy duty disconnect. Provide labeling with Maximo number and feed location.	240	100	NF	3	COL. LINE G-8
#4711-SS0133	Remove existing disconnect and install new heavy duty disconnect. Provide labeling with Maximo number and feed location.	600	30	15	3	COL. LINE F-7.5
#4711-SS0134	Remove existing disconnect and install new N3R heavy duty disconnect. Provide labeling with Maximo number and feed location.	600	30	UN	3	COL. LINE I-8.5
#4711-SS0135	Remove existing disconnect and install new N3R heavy duty disconnect. Provide labeling with Maximo number and feed location.	600	30	UN	3	COL. LINE I-8.5
#4711-SS0136	Remove existing disconnect and install new N3R heavy duty disconnect. Provide labeling with Maximo number and feed location.	600	30	UN	3	COL. LINE I-8.5
#4711-SS0137	Remove existing disconnect and install new N3R heavy duty disconnect. Provide labeling with Maximo number and feed location.	600	30	UN	3	COL. LINE I-8.5
#4711-SS0138	Disconnect is not currently used.	-	-	-	-	EAST OUTSIDE EXHAUST FANS
#4711-SS0142	Remove existing disconnect and replace with combination starter disconnect. Combine with 4711-SSS0009. Provide labeling with Maximo number and feed location.	600	30	UN	3	COL. LINE B-12.9
#4711-SS0143	Remove existing disconnect and associated wire and device.	600	30	UN	3	COL. LINE B-12
#4711-SS0144	Remove existing disconnect and associated wire and device.	600	UN	UN	3	COL. LINE C-12
#4711-SS0145	Remove existing disconnect and associated wire and device.	600	30	15	3	COL. LINE C-12

Maximo Number	Required Action	Volts	Amps	Fuse	Phase	Location
#4711-SS0146	Remove existing disconnect and associated wire and device.	600	30	20	1	COL. LINE C-12
#4711-SS0147	Remove existing disconnect and associated wire and device.	240	30	UN	3	COL. LINE C-12
#4711-SS0148	Remove existing disconnect and install new heavy duty disconnect. Provide labeling with Maximo number and feed location.	600	30	30	3	COL. LINE C-12
#4711-SS0149	Remove existing disconnect and install new panel to feed loads. See panel schedule 4711-RP0060.	240	100	F	3	COL. LINE C-12
#4711-SS0150	Remove existing disconnect and associated wire and device.	600	30	F	3	COL. LINE C-12
#4711-SS0151	Remove existing disconnect and install new heavy duty disconnect. Provide labeling with Maximo number and feed location.	240	30	F	3	COL. LINE C-12
#4711-SS0152	Remove existing disconnect and all wire associated with it. Re-feed load as shown in 4711-RP0060.	240	30	20	3	COL. LINE C-12.5
#4711-SS0153	Remove existing disconnect and install new heavy duty disconnect. Provide labeling with Maximo number and feed location.	240	60	UN	3	COL. LINE I-7.5
#4711-SS0154	Remove existing disconnect and all wire associated with it.	240	200	NF	3	COL. LINE C-10
#4711-SS0155	Remove existing disconnect and all wire associated with it.	240	60	UN	3	COL. LINE E-10
#4711-SS0156	Remove existing disconnect and all wire associated with it.	240	30	20	3	COL. LINE F-12
#4711-SS0157	Remove existing disconnect and all wire associated with it.	240	60	50	3	COL. LINE F-12
#4711-SS0158	Remove existing disconnect and all wire associated with it.	600	1200	F	3	COL. LINE G-12
#4711-SS0159	Existing disconnect to remain. Provide labeling with Maximo number and feed location.	600	30	30	3	COL. LINE I-12
#4711-SS0160	Existing disconnect to remain. Provide labeling with Maximo number and feed location.	240	60	60	3	COL. LINE H-12
#4711-SS0161	Remove existing disconnect and all wire associated with it.	240	60	UN	3	COL. LINE B-9
#4711-SS0162	Remove existing disconnect and install new heavy duty disconnect. Provide labeling with Maximo number and feed location.	240	30	UN	3	COL. LINE B-9
#4711-SS0163	Remove existing disconnect and install new heavy duty disconnect. Provide labeling with Maximo number and feed location.	240	30	UN	3	COL. LINE A-9
#4711-SS0164	Remove existing disconnect and all wire associated with it.	240	30	UN	3	COL. LINE A-9.5
#4711-SS0165	Remove existing disconnect and install new heavy duty disconnect. Provide labeling with Maximo number and feed location.	600	100	F	3	COL. LINE I-6.5
#4711-SS0166	Existing disconnect to remain. Provide labeling with Maximo number and feed location.	600	60	UN	3	COL. LINE H-1.5
#4711-SS0167	Disconnect is not currently used.	-	-	-	-	ROOM E-114
#4711-SS0168	Existing disconnect to remain. Provide labeling with Maximo number and feed location.	240	30	UN	3	COL. LINE D-5
#4711-SS0169	Disconnect is not currently used.	-	-	-	-	ROOM W-129
#4711-SS0170	Remove existing disconnect and extend circuitry to 4711-SSS0016.	240	60	UN	3	COL. LINE C-5
#4711-SS0171	Remove existing disconnect and install new N3R heavy duty disconnect. Provide labeling with Maximo number and feed location.	240	30	UN	3	COL. LINE H-1
#4711-SS0172	Existing disconnect to remain. Provide labeling with Maximo number and feed location.	600	30	NF	3	COL. LINE H-1
#4711-SS0173	Existing disconnect to remain. Provide labeling with Maximo number and feed location.	600	30	NF	3	COL. LINE H-1.5
#4711-SS0174	Existing disconnect to remain. Provide labeling with Maximo number and feed location.	600	30	NF	3	COL. LINE H-2
#4711-SS0175	Existing disconnect to remain. Provide labeling with Maximo number and feed location.	600	100	NF	1	COL. LINE H-1.5
#4711-SS0176	Remove existing disconnect and install new N3R heavy duty disconnect. Provide labeling with Maximo number and feed location.	240	60	UN	3	COL. LINE I-9
#4711-SS0177	Remove existing disconnect and install new N3R heavy duty disconnect. Provide labeling with Maximo number and feed location.	240	30	UN	3	COL. LINE I-5
#4711-SS0178	Install new heavy duty disconnect. Provide labeling with Maximo number and feed location.	240	100	NF	3	COL. LINE I-2.5
#4711-SS0179	Install new heavy duty disconnect. Provide labeling with Maximo number and feed location.	240	100	NF	3	COL. LINE I-2.5

Three Phase, 480V Delta Primary - 208Y/120V Wye Secondary, Dry Type Transformer

Maximo Number	Transformer KVA	Primary F.L. Amps	Primary Breaker or Fuse	Primary Feeder	Secondary F.L. Amps	Secondary Breaker or Fuse	Secondary Feeder	Required action
4711-XFMR0002	300	360	500A	2 sets of 3#250MCM & 1#2(G)	830	800A	2 sets of 4#500MCM & 1#1/0(G)	Remove existing transformer and install new transformer. Provide labeling with Maximo number and feed location.
4711-XFMR0005	45	54.15	90A	3#4 & 1#8(G)	125	150A	4#1/0 & 1#6(G)	Remove existing transformer and install new transformer. Provide labeling with Maximo number and feed location.
4711-XFMR0011	30	36.1	60A	3#6 & 1#10(G)	83.33	100A	4#2 & 1#8(G)	Remove existing transformer and install new transformer. Provide labeling with Maximo number and feed location.
4711-XFMR0026	300	360	500A	2 sets of 3#250MCM & 1#2(G)	830	800A	2 sets of 4#500MCM & 1#1/0(G)	Remove existing transformer and install new transformer. Provide labeling with Maximo number and feed location.
4711-XFMR0027	225	270	400A	3#500MCM & 1#2(G)	625	600A	2 sets of 4#350MCM & 1#1(G)	New transformer to be installed.

Three Phase, 208V Delta Primary - 208Y/120V Wye Secondary, Dry Type Isolation Transformer [1]

Maximo Number	Transformer KVA	Primary F.L. Amps	Primary Breaker or Fuse	Primary Feeder	Secondary F.L. Amps	Secondary Breaker or Fuse	Secondary Feeder	Required action
4711-XFMR0001	45	125	150A	3#1/0 & 1#6(G)	125	150A	4#1/0 & 1#6(G)	Remove existing transformer and install new transformer. Provide labeling with Maximo number and feed location.
4711-XFMR0004	30	83.33	100A	3#2 & 1#8(G)	83.33	100A	4#2 & 1#8(G)	Remove existing transformer and install new transformer. Provide labeling with Maximo number and feed location.

Single Phase, 480V Primary - 240/120V Secondary, Dry Type Transformer

Maximo Number	Transformer KVA	Primary F.L. Amps	Primary Breaker or Fuse	Primary Feeder	Secondary F.L. Amps	Secondary Breaker or Fuse	Secondary Feeder	Required action
4711-XFMR0006	3	6.25	15A	2#12 & 1#12(G)	12.5	20A	3#12 & 1#12(G)	Existing transformer to be removed. Remove all associated wiring and conduit.
4711-XFMR0007	3	6.25	15A	2#12 & 1#12(G)	12.5	20A	3#12 & 1#12(G)	Existing transformer to be removed. Remove all associated wiring and conduit.
4711-XFMR0008	3	6.25	15A	2#12 & 1#12(G)	12.5	20A	3#12 & 1#12(G)	Existing transformer to be removed. Remove all associated wiring and conduit.
4711-XFMR0009	15	31	50A	2#8 & 1#10(G)	62	80A	3#2 & 1#8(G)	Remove existing transformer and install new transformer. Provide labeling with Maximo number and feed location.
4711-XFMR0010	25	52	70A	2#4 & 1#8(G)	104	150A	3#1/0 & 1#6(G)	Remove existing transformer and install new transformer. Provide labeling with Maximo number and feed location.
4711-XFMR0012	0.5	1.04	15A	2#12 & 1#12(G)	2.083	15A	3#12 & 1#12(G)	Existing transformer to be removed. Remove all associated wiring and conduit.
4711-XFMR0013	0.5	1.04	15A	2#12 & 1#12(G)	2.083	15A	3#12 & 1#12(G)	Existing transformer to be removed. Remove all associated wiring and conduit.
4711-XFMR0017	2	4.17	15A	2#12 & 1#12(G)	8.33	15A	3#12 & 1#12(G)	Existing transformer to be removed. Remove all associated wiring and conduit.

Single Phase, 208V Primary - 240/120V Secondary, Dry Type Transformer

Maximo Number	Transformer KVA	Primary F.L. Amps	Primary Breaker or Fuse	Primary Feeder	Secondary F.L. Amps	Secondary Breaker or Fuse	Secondary Feeder	Required action
4711-XFMR0003	15	72	100A	2#2 & 1#8(G)	62.5	80A	3#2 & 1#8(G)	Remove existing transformer and install new transformer. Provide labeling with Maximo number and feed location.
4711-XFMR0025	5	24.04	40A	2#8 & 1#10(G)	20.8	30A	3#10 & 1#10(G)	Remove existing transformer and install new transformer. Provide labeling with Maximo number and feed location.
4711-XFMR0028	15	72	100A	2#2 & 1#8(G)	62.5	100A	3#2 & 1#8(G)	Remove existing transformer and install new transformer. Provide labeling with Maximo number and feed location.

Single Phase, 120/240V Primary - 12/24V Secondary, Dry Type Transformer

Maximo Number	Transformer KVA	Primary F.L. Amps	Primary Breaker or Fuse	Primary Feeder	Secondary F.L. Amps	Secondary Breaker or Fuse	Secondary Feeder	Required action
4711-XFMR0014	2	9.6	20A	2#12 & 1#12(G)	83.33	-	-	Remove existing transformer and install new transformer. Provide labeling with Maximo number and feed location.
4711-XFMR0015	2	9.6	20A	2#12 & 1#12(G)	83.33	-	-	Remove existing transformer and install new transformer. Provide labeling with Maximo number and feed location.
4711-XFMR0016	2	9.6	20A	2#12 & 1#12(G)	83.33	-	-	Remove existing transformer and install new transformer. Provide labeling with Maximo number and feed location.

PLAN NOTES

[1] CONTRACTOR SHALL VERIFY ISOLATION BOND IS GROUNDED PROPERLY ON DRY TYPE ISOLATION TRANSFORMERS.

GENERAL NOTES

1. TRANSFORMER PRIMARY AND SECONDARY WIRING IS NOT TO BE REPLACED UNLESS OTHERWISE NOTED.

WARNING
DO NOT SCALE THIS DRAWING
THIS DRAWING WAS DESIGNED TO BE PRINTED AT A NASA SHEET SIZE: MSFC STD. SIZE 40" X 28"

ALABAMA REGISTERED No. 28067 PROFESSIONAL ENGINEER JOHN AVERRETT 9/4/15

REV	BY	DATE	REVISION	C.I. NO.	APPROVED

Marshall Space Flight Center
Huntsville, Alabama 35812

BUILDING 4711
REVITALIZE ELECTRICAL SYSTEMS

DISCONNECT AND TRANSFORMER SCHEDULES

AE FIRM: GOODWYN | MILLS | CAWOOD — MERRICK & COMPANY — JOINT VENTURE

NASA AE CONTRACT NO. NNM12AA49C NNM14AA72T

SUBMITTED: JENNIFER LANDRY
AE: DATE: 09/15/15
DESIGNED S. CRITTENDEN
DRAWN M. PATE
CHECKED J. AVERRETT
SCALE: AS SHOWN

APPROVAL RECOMMENDED: CODY GOODMAN, AS22 PROJECT A/E
APPROVAL RECOMMENDED: TIM DOSS, AS22 SUPPORT A/E
APPROVAL RECOMMENDED: PHIL HENDRIX, AS22 TEAM LEAD
SPEC. NO. FAC-M5063

APPROVED: NELSON OLINGER, AS22 GROUP LEAD DATE: 09/15/15

DRAWING NO. FAC-CU-4711-E802
SHEET 36 OF 38

FINAL SUBMITTAL
ISSUED FOR CONSTRUCTION
REF. NO. E802

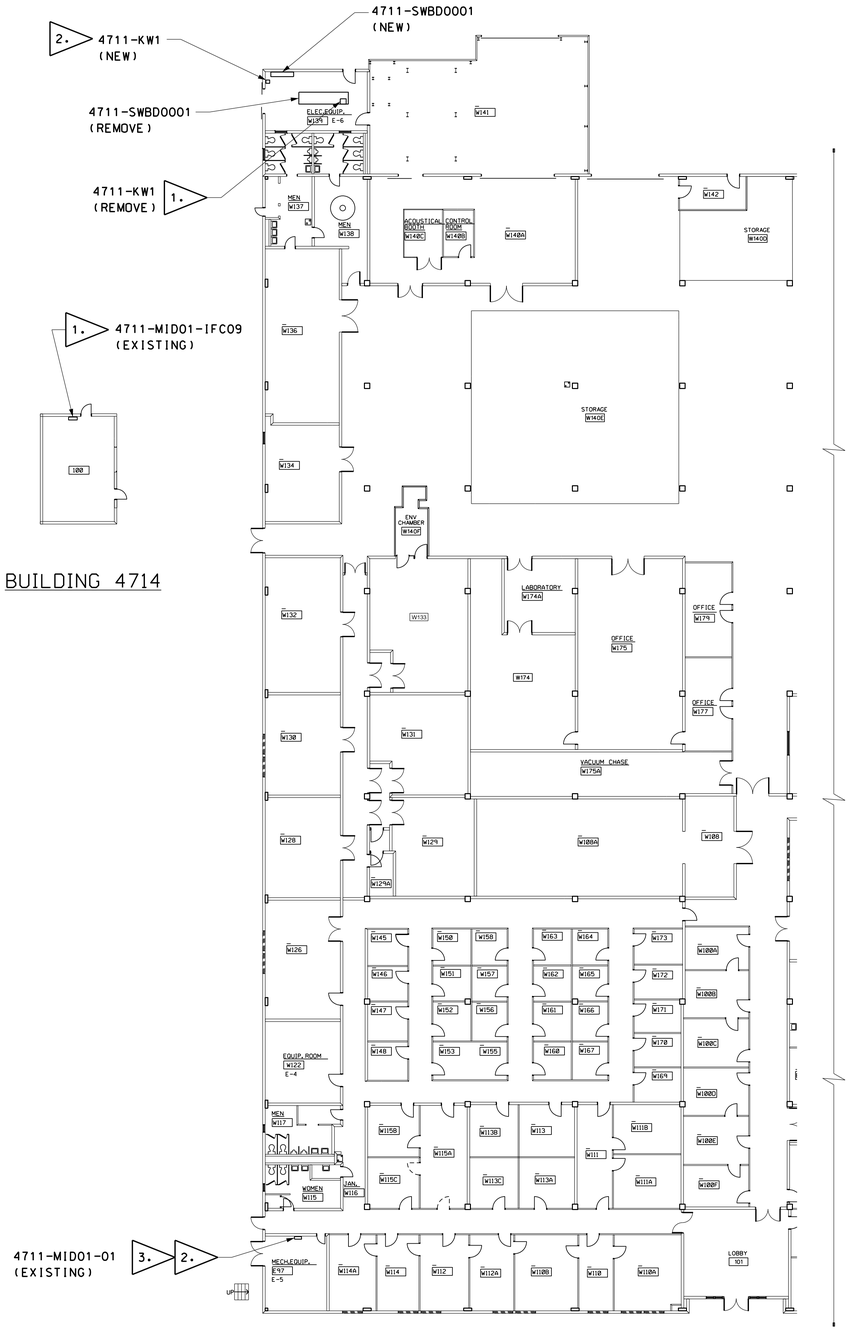

BUILDING 4711
PARTIAL FIRST FLOOR PLAN
SCALE: 1/16" = 1'-0"
0 8 16 24

UCS GENERAL NOTES:

1. ALL ELECTRICAL WORK SHALL COMPLY WITH 2014 NATIONAL ELECTRICAL CODE AND SPEC. NO. FAC M5063 AS MINIMUM STANDARDS. ITEMS SPECIFIED BY BRAND NAME AND PART NUMBER SHALL NOT BE SUBSTITUTED SO THAT CONTINUOUS SYSTEM COMPATIBILITY IS ASSURED.
2. SENSOR CABLE SHALL BE 2 OR 4 CONDUCTOR AS SHOWN. COPPER. POLYMER ALLOY INSULATED. TWISTED PAIRS. PLENUM RATED. EACH PAIR HAVING A 24 AWG STRANDED DRAIN WIRE.
   1 PAIR COLOR CODE: BLACK/RED 22 GA. (7X30) WEST PENN WIRE PN 25291B. OR APPROVED EQUAL.
   2 PAIR COLOR CODE: BLACK/RED WHITE/GREEN 22 GA. (7X30) WEST PENN WIRE PN 25510B. OR APPROVED EQUAL.
3. DATA CABLE SHALL BE 2 CONDUCTOR. COPPER. FOAM TEFLON INSULATION. TWISTED PAIR. PLENUM RATED. PAIR COLOR CODE: WHITE/BLUE 24AWG (7 X 32) WITH STRANDED DRAIN WIRE. WEST PENN PN D254851. BELDEN PN 82841. OR APPROVED EQUAL.
4. 24VAC POWER SUPPLY CABLE FOR VALVE AND DAMPER ACTUATORS SHALL BE 2 CONDUCTOR. POLYMER ALLOY INSULATION. PLENUM RATED. 1 PAIR COLOR CODE: RED/BLACK 16 AWG. WEST PENN P/N 25225B. OR APPROVED EQUAL.
5. CONTRACTOR SHALL FURNISH ALL PARTS NECESSARY FOR A COMPLETE INSTALLATION.
6. MICROSCAN PRODUCTS ARE AVAILABLE FROM DORSETT TECHNOLOGIES. PH# 336-679-2126.
7. CONDUIT PENETRATIONS AT THE UCS PANEL(S) SHALL BE IN THE BOTTOM.
8. A MAXIMUM OF 5 SHIELD/DRAIN WIRES SHALL BE TERMINATED AT EACH GROUND BAR POSITION. SHIELD/DRAIN WIRES ARE NOT TO EXTEND IN TO THE I/O PANEL.
9. THE CONTRACTOR SHALL PROVIDE PROGRAMMING OF THE NEW UCS MONITORING POINTS TO THE INFOSCAN DATABASE TO ENABLE A COMPLETELY OPERATIONAL SYSTEM.
10. THE CONTRACTOR SHALL COORDINATE ALL PHASES OF WORK CLOSELY WITH THE COR AND UCS CONTRACTOR.

UCS FLAG NOTES:

1. REMOVE SENSOR CABLE. CONDUIT AND I/O POINTS PER UCS DEMOLITION WIRING DETAIL.
2. PROVIDE NEW DATA CABLE AND CONDUIT TO EXISTING X-TALK LOCATED IN 4711-MID01-01 PANEL PER COMM TRUNK LAYOUT.
3. CONTRACTOR SHALL RE-CONNECT LIGHTING CONTACTOR FOR THE NORTH HIGHBAY LIGHTING AND ALL RELATED UCS WIRING.

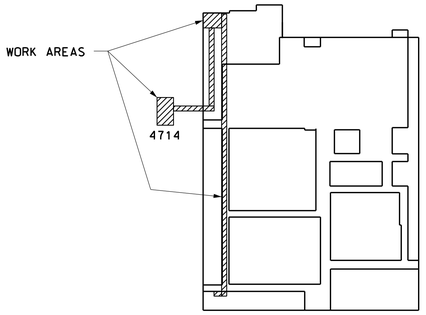

BUILDING 4711
KEY PLAN
N.T.S.

WARNING
DO NOT SCALE THIS DRAWING
THIS DRAWING WAS DESIGNED TO BE PRINTED AT A NASA SHEET SIZE: MSFC STD. SIZE 40" X 28"

PRELIMINARY CADD DWG.
CHANGES TO THIS DRAWING SHALL BE MADE ON CADD ONLY.
04-20-15 EWO
LATEST CADD UPDATE: 09-02-15 09:07 AM
BY: W. OWEN

REV.	BY	DATE	REVISION	C.J. NO.	APPROVED

Marshall Space Flight Center
Huntsville, Alabama 35812

WORK REQUEST NO. 4064855

BUILDING 4711
REVITALIZE ELECTRICAL SYSTEMS
UCS FLOOR PLAN AND NOTES

AE FIRM: KAYA Associates, Inc.
NASA AE CONTRACT NO. NAS8-NNM11AA39C

SUBMITTED: JUERGEN HAUKOHL
APPROVAL RECOMMENDED: CODY GOODMAN, A522 PROJECT A/E
APPROVED: NELSON OLINGER
AE: DATE:
APPROVAL RECOMMENDED: NORM HAWES, A522 SUPPORT A/E
A522 GROUP LEAD DATE: 09-15-15
DESIGNED W. OWEN
DRAWN W. OWEN
CHECKED D. BORDER
APPROVAL RECOMMENDED: KAYA Associates,Inc. A522 TEAM LEAD
SCALE: AS NOTED
SPEC. NO. FAC M5063
DRAWING NO. FAC-CU-4711-U1
SHEET 37 OF 38

SIGNATURES ON INDEX SHEET INDICATE ACCEPTANCE OF THIS SHEET
REF. NO. U1 OF 2

MSFC-FORM 232 REV. 8-21-89-RCL

Master Bid Disk 10-06-2015

$file$

4711-MID01-09
(IFC09)
LOCATED IN BUILDING 4714

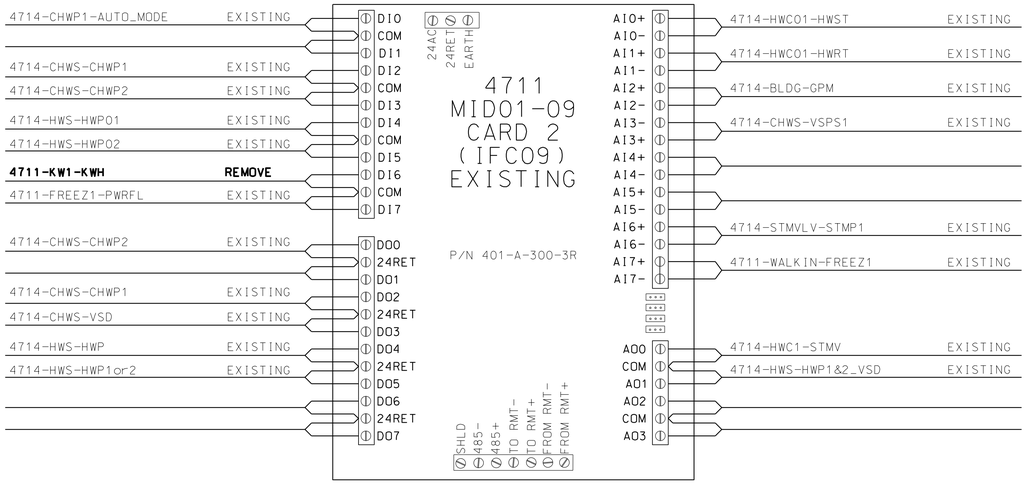

UCS DEMOLITION WIRING DETAIL

4711-MID01-01
(EXISTING)
ROOM E97/E-5

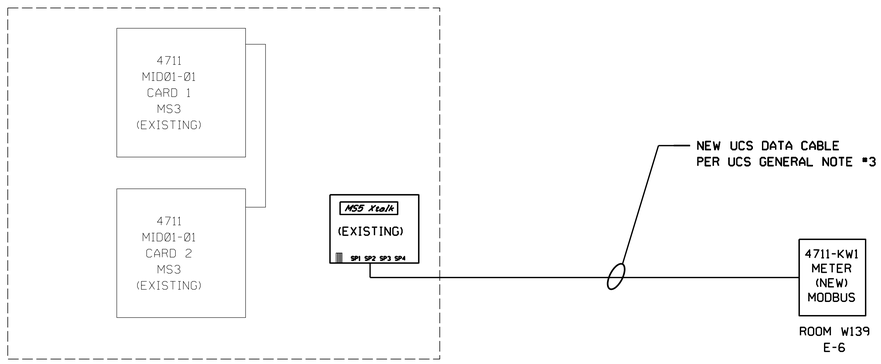

UCS COMM TRUNK LAYOUT

• PROVIDE NEW UCS DATA CABLE SHOWN IN BOLD PER UCS GENERAL NOTE 3.•

WARNING

DO NOT SCALE THIS DRAWING

THIS DRAWING WAS DESIGNED TO BE PRINTED AT A NASA SHEET SIZE: MSFC STD. SIZE 40" X 28"

PRELIMINARY CADD DWG.

CHANGES TO THIS DRAWING SHALL BE MADE ON CADD ONLY.

04-20-15 EWO — LATEST CADD UPDATE: 09-02-15 07:07 AM BY: W. OWEN

REV.	BY	DATE	REVISION	C.I. NO.	APPROVED

Marshall Space Flight Center
Huntsville, Alabama 35812

WORK REQUEST NO. 4064855

BUILDING 4711
REVITALIZE ELECTRICAL SYSTEMS
UCS DEMOLITION WIRING DETAILS AND NEW COMM TRUNK LAYOUT

AE FIRM: KAYA Associates, Inc.

NASA AE CONTRACT NO. NAS8-NNM11AA39C

SUBMITTED: JUERGEN HAUKOHL
AE: DATE:
DESIGNED W. OWEN
DRAWN W. OWEN
CHECKED D. BORDER
SCALE: AS NOTED

APPROVAL RECOMMENDED: CODY GOODMAN, A522 PROJECT A/E
APPROVAL RECOMMENDED: NORM HAWES, A522 SUPPORT A/E
APPROVAL RECOMMENDED: KAYA Associates,Inc., A522 TEAM LEAD
SPEC. NO. FAC M5063

APPROVED: NELSON OLINGER
A522 GROUP LEAD DATE: 09-15-15

DRAWING NO. FAC-CU-4711-U2

SHEET 38 OF 38

SIGNATURES ON INDEX SHEET INDICATE ACCEPTANCE OF THIS SHEET

REF. NO. U2 OF 2

MSFC-FORM 232 REV. 8-21-89-RCL

Master Bid Disk 10-06-2015

$file$