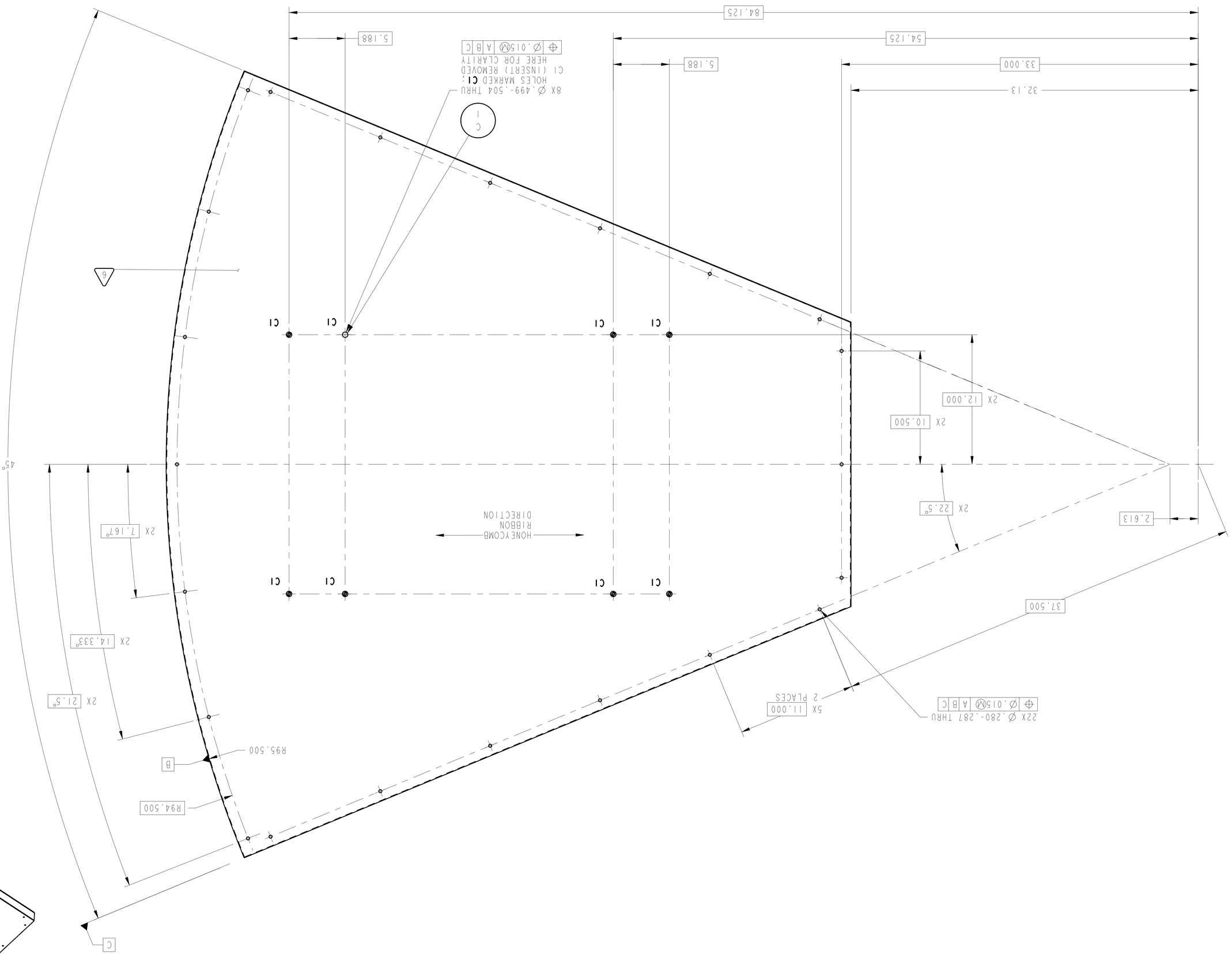

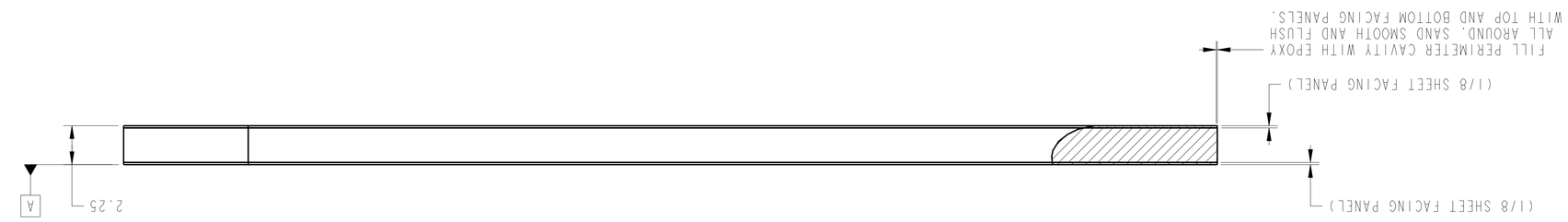

1. MATERIAL: ALUMINUM ALLOY 6061-T6 HONEYCOMB PANEL CONSTRUCTION, 2" THICK CORE, 1/4 CELL SIZE, 1/8 THICK ALUMINUM FACING PANELS.
2. PROVIDE LEGIBLE COPIES OF MILL CERTS FOR ALL MATERIALS WITH THIS DRAWING NUMBER ADDED.
3. CERTIFICATES OF CONFORMANCE AND MATERIAL TEST REPORTS SHALL BE SUPPLIED FOR ALL COMMERCIAL PARTS AS NOTED.
4. 125 Ra ALL MACHINED SURFACES UNLESS OTHERWISE NOTED.
5. BREAK ALL SHARP EDGES 1/16".
6. ELECTROCHEMICAL ETCH DRAWING PART NUMBER 140602MRA037 ON SPECIFIED SURFACE, PER SAE-AS478, METHOD 7A (ZONE D3).
7. APPROXIMATE WEIGHT = 100 LBS.

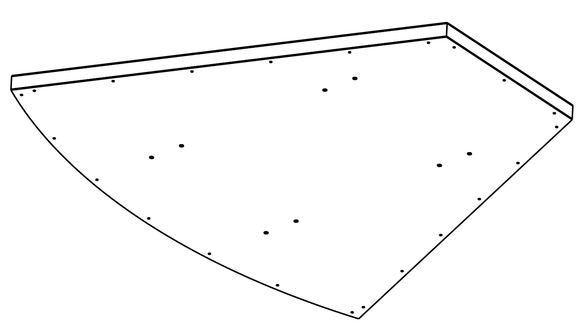

COMMERCIAL PARTS LIST

BALLOON NO	DESCRIPTION	QTY/ ASSY
1	INSERT, .250-28 UNJF, .496" OVERALL LENGTH, CRES 303 PER ASTM A 582/A582M PASSIVATE PER AMS2700, METHOD 1, TYPE 2 NON-LOCKING, PART No. NAS1836C4N16	8

CHG	ZONE	DESCRIPTION	APP/DATE
A	H8	REVISED COMMERCIAL PART ITEM C-1 TO REFLECT NEW PART NO AND DESCRIPTION REMOVED COMMERCIAL PART ITEM C-2 REMOVED PERIMETER ALUMINUM FILL PANEL AND REPLACED WITH EPOXY FILLER	CMG 7/9/15

REVISIONS

NATIONAL AERONAUTICS AND SPACE ADMINISTRATION
JOHN H. GLENN RESEARCH CENTER
CLEVELAND, OHIO

RATF TEST STAND INSTALLATION

140602MRA005

A037 CLOSE-OUT PANEL

DIMENSIONS ARE IN INCHES	CONTRACT NNC12BA01B	CONTRACTOR GESS3 TEAM
TOLERANCE ON	TASK ORDER	MO-340
.X ± 0.03	DRAFTER	YPL/R.SUKEL
.XX ± 0.01	ENGINEER	HO00/M.HENRY
.XXX ± 0.005	DESIGNER	YPL/C.GRIFFITHS
ANGULAR ± 0.125°	DIMENSIONING AND TOLERANCING PER ASME Y14.5M-1994	
FRACTION ± 1/16		
BREAK EDGES .01-.03		

PRIOR TO USE VERIFY THE INTENDED PURPOSE IN PDM "FOR" ATTRIBUTE.

ULESS OTHERWISE SPECIFIED

PDM REVISION: -

PDM REL LEVEL: Rel63SG

PDM DATABASE: _D7031.SPF.CEV.Qual.Test15

MODEL NAME: SPF_MPCV_MSAS_COPA_BPI-A

CHECK FOR ANY OUTSTANDING ECO'S PRIOR TO USE

SIZE	DRAWING NUMBER	REV	BLDG	AREA
E	140602MRA037	A	SPF	PBS
SCALE:	INITIAL REL DATE 6/10/15	SHEET 1 OF 2	UNITS: INCH	DISCIPLINE MECHANICAL

1/4 & NOTED

PRO/E VERSION: Wildfire 5.0

PR 4200567536

NAME:CHUBERTI OBJECT:SPF_MPCV_MSAS_COPA_BPI-A_1 DATE:09-Jul-15 08:32

SIZE E DRAWING NUMBER 140602MRA037 REV A

COMMERCIAL PARTS LIST

BALLOON NO	DESCRIPTION	QTY/ ASSY
1	.250-28 UNF X .75 LG. SOCKET HEAD CAP SCREW PER ASTM A574, ZINC-PLATED, MINIMUM TENSILE STRENGTH OF 170,000 PSI, McMASTER-CARR PART No. 90128A365 OR EQUIVALENT	8
2	PULL HANDLE, ALUMINUM, ANODIZED, 1012 Lb. LOAD RATING, McMASTER-CARR PART No. 5190A310	4
3	SILICONE RUBBER SHEET, 1/4" THK., ADHESIVE BACKED, 60A DUROMETER, SHEETING - McMASTER-CARR PART No. 8977K86 2" WIDE STRIP - McMASTER-CARR PART No 93755K67	1

1. INSURE SURFACE OF ALUMINUM IS FREE FROM ALL DIRT, OIL AND GREASE PRIOR TO INSTALLATION OF ADHESIVE-BACKED SILICONE.

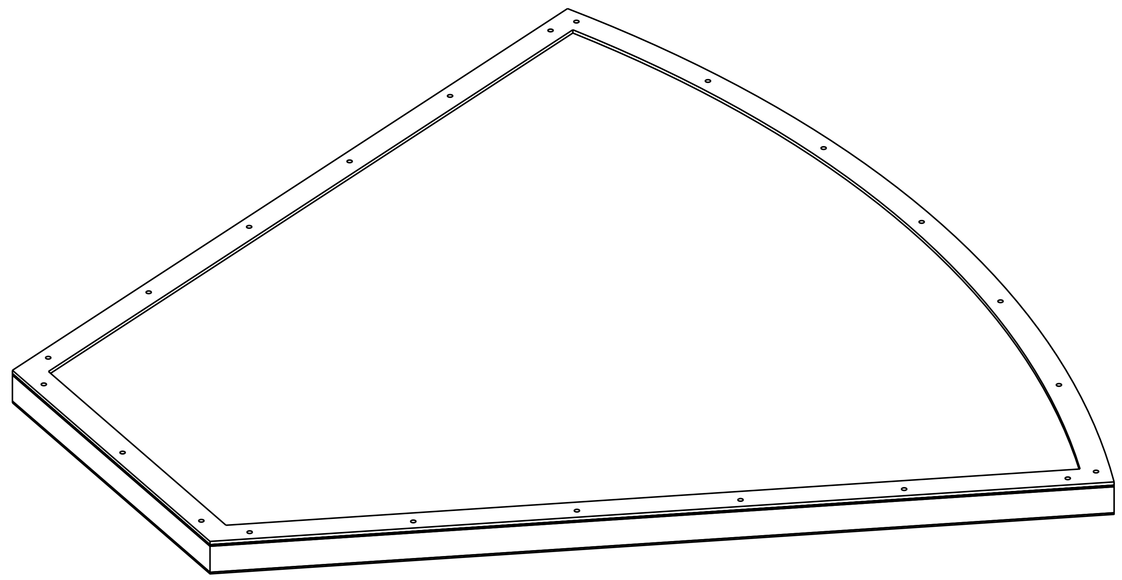

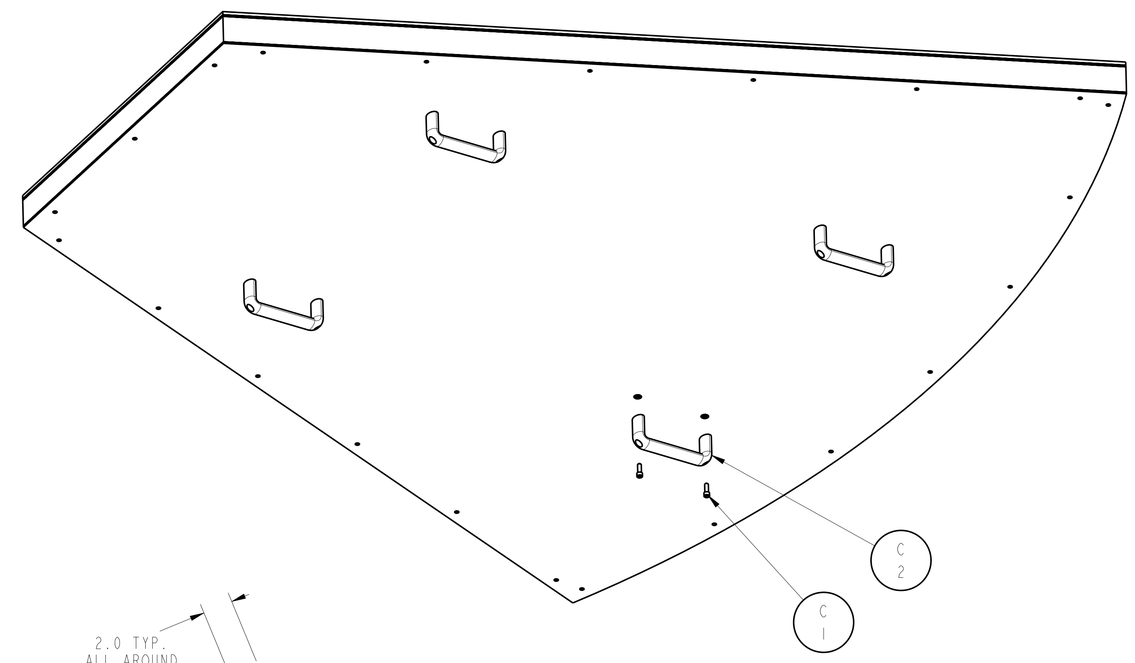

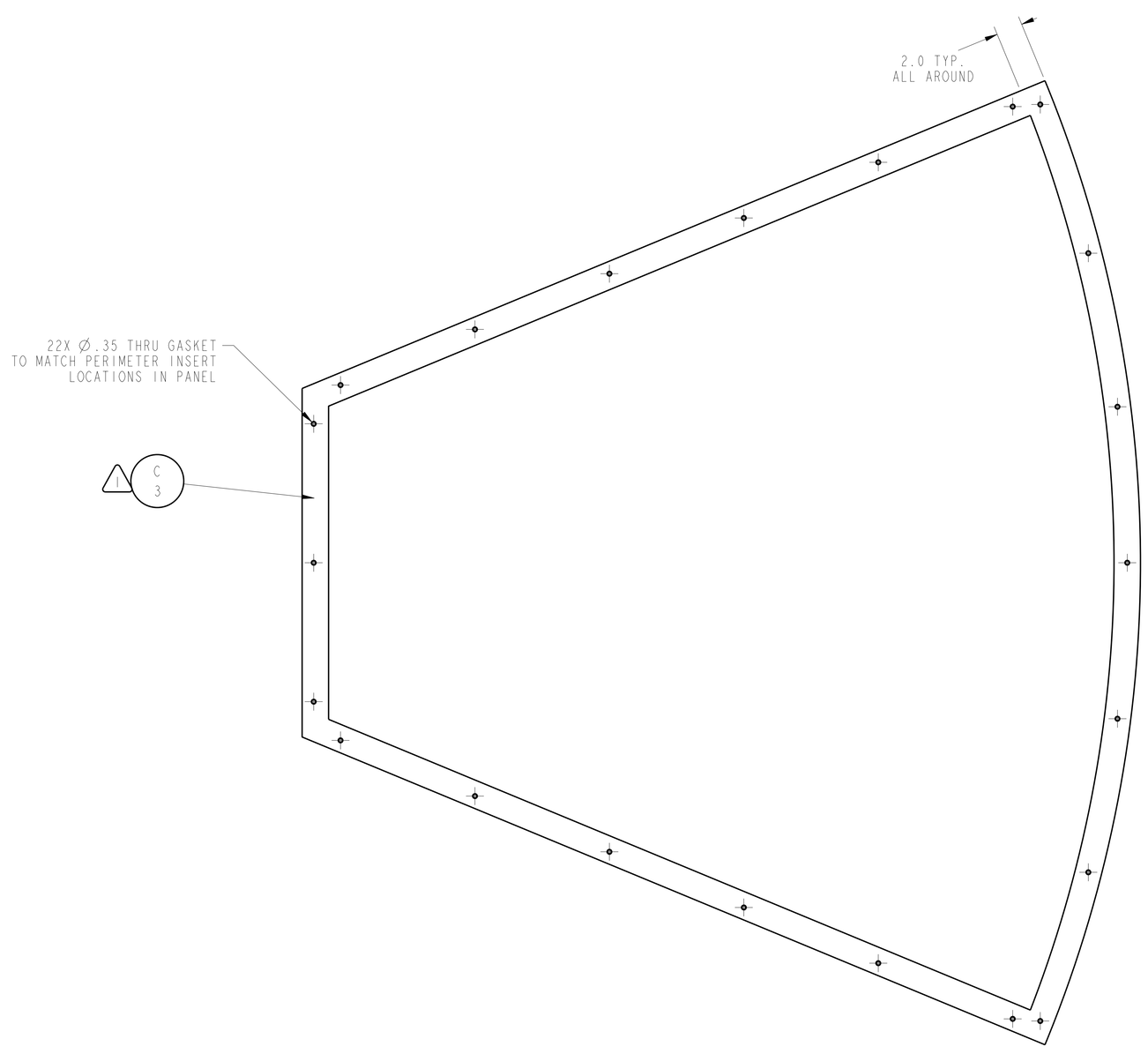

CHG	ZONE	DESCRIPTION	APP/DATE
REVISIONS			

SIZE	DRAWING NUMBER	REV	BLDG	AREA
E	140602MRA037	A	SPF	PBS
SCALE: 1/5	INITIAL REL DATE 6/10/15	SHEET 2 OF 2	UNITS: INCH DISCIPLINE MECHANICAL	

PRO/E VERSION: Wildfire 5.0

SIZE E DRAWING NUMBER 140602MRA037 REV A

NAME:CMORFFI OBJECT:SPF_MPOV_MRA6_COPN_SP1-1_2 DATE:09-Jul-15 13:38:32