1. MATERIAL: TYPE 416 STAINLESS STEEL

2. REMOVE ALL BURRS AND SHARP EDGES.

3. MACHINE INNER AND OUTER CONTOUR PER CAD DEFINITION 1508xxMRA200.STP

4. FOR DIAMETER INSPECTION, USE 3 POINT ROUNDNESS MEASUREMENT

5. ELECTROCHEMICAL ETCH DRAWING PART NUMBER ON SPECIFIED SURFACE, PER SAE-AS478, METHOD 7A

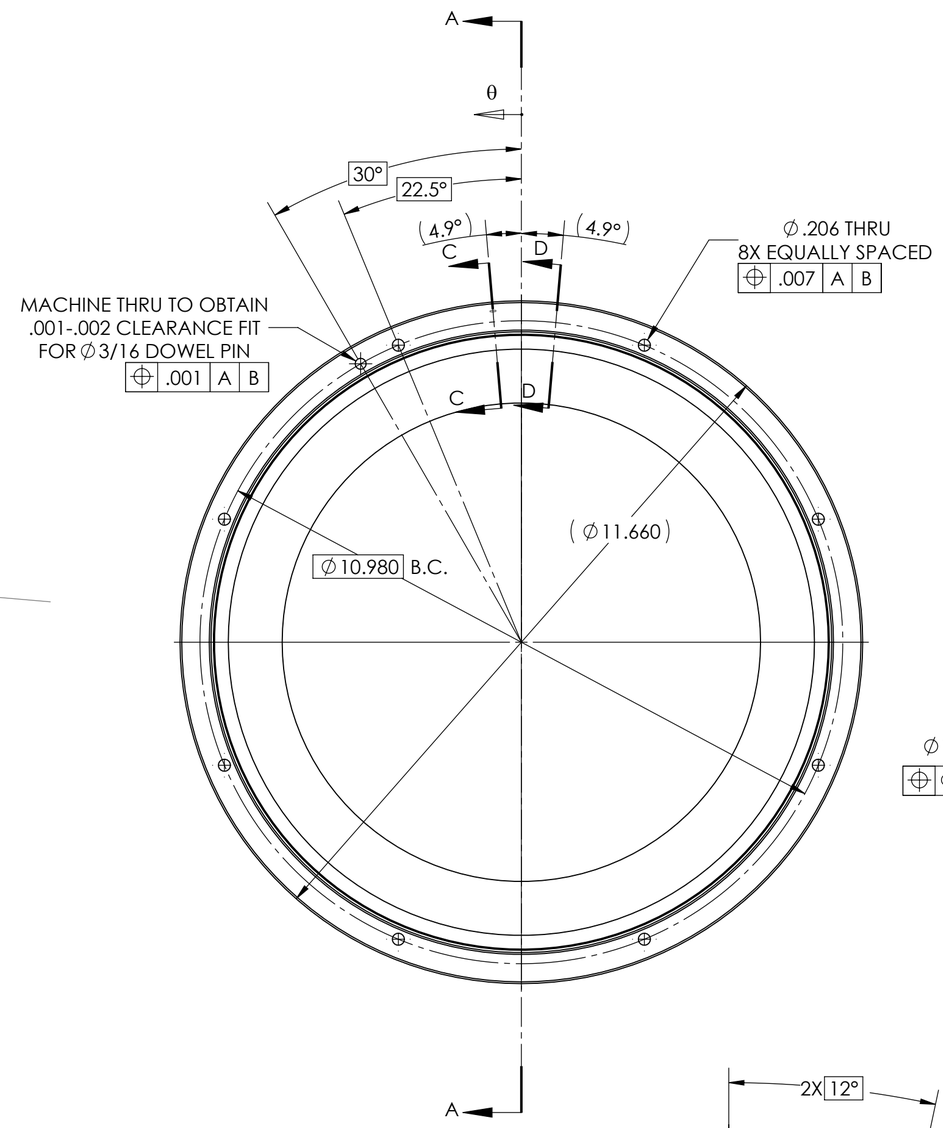

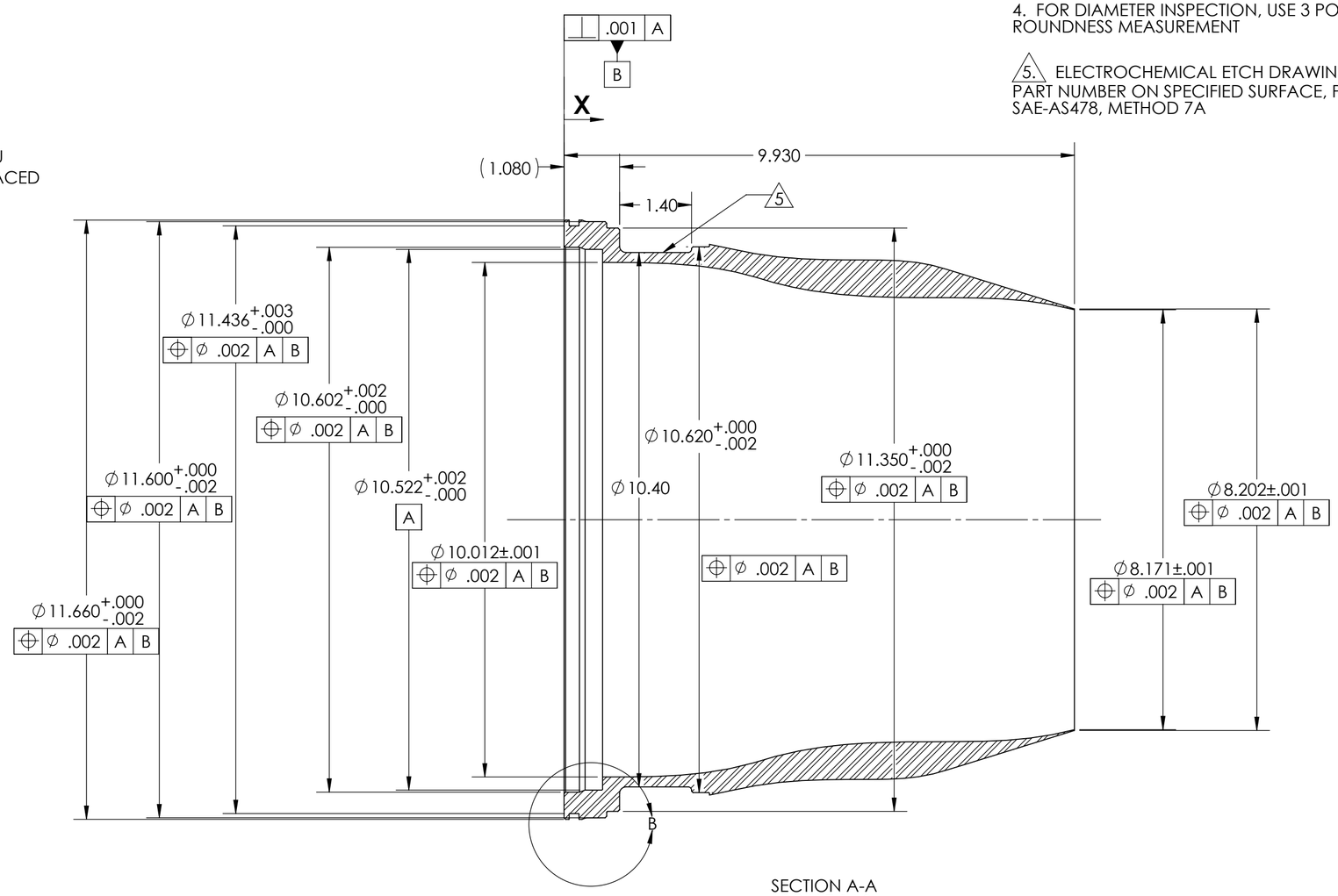

SECTION A-A
SCALE 1 : 2

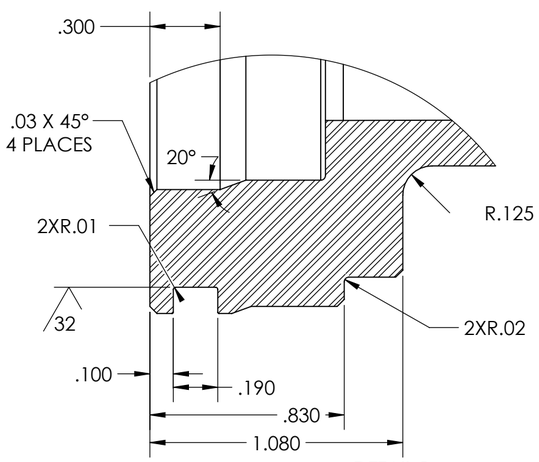

DETAIL B
SCALE 2 : 1

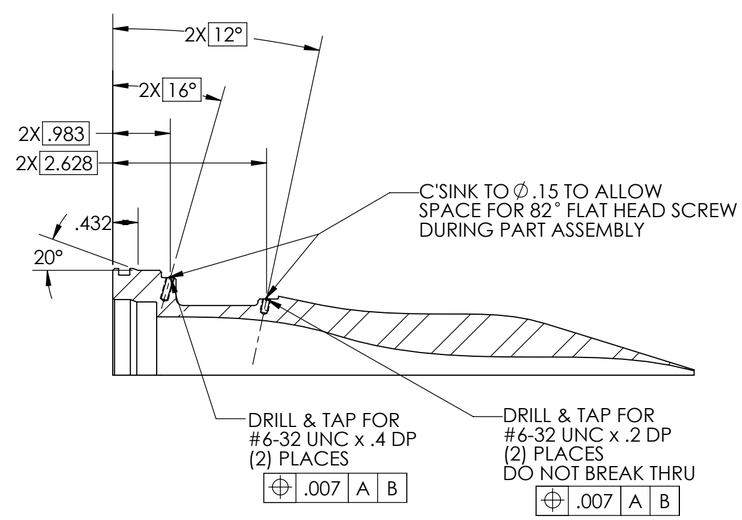

SECTION C-C & D-D
2 PLACES
@ THETA=355.1° & 4.9°

A200 INNER CONTOUR INSPECTION		
X	R	R INSP
1.000	5.006	
2.000	4.987	
3.000	4.885	
4.000	4.637	
5.000	4.428	
6.000	4.340	
7.000	4.320	
8.000	4.316	
9.000	4.257	

A200 OUTER CONTOUR INSPECTION		
X	R	R INSP
3.000	5.323	
4.000	5.134	
4.750	5.071	
5.500	5.055	
6.500	5.041	
7.000	4.984	
8.000	4.701	
9.000	4.390	

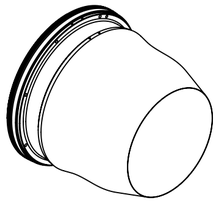

REV	DESCRIPTION	DATE

UNLESS OTHERWISE SPECIFIED DIMENSIONS ARE IN INCHES TOLERANCES ARE

DECIMALS
.XXX ± .005
.XX ± .010
.X ± .030

FRACTIONS
±1/16
MACH ANGLES
±1/2°

MACHINED SURFACE ROUGHNESS
63 Ra UNLESS OTHERWISE NOTED

	NAME	DAY-MO-YR
DRAWN	DGE	28JUL15

DIMENSIONING AND TOLERANCING PER ASME Y14.5M-1994

PROJECT: AAPL/NATR/HFJER THIRD STREAM **(THRD15)**

A200

FAN NOZZLE -F2
(Ab/Ac=1.0)

SIZE **C**

DRAWING NUMBER 1508xxMRA200

REV x

SCALE: 1:2

SHEET 1 OF 1