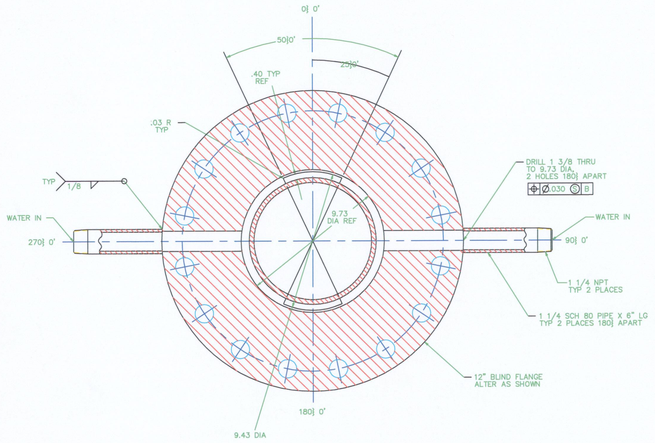

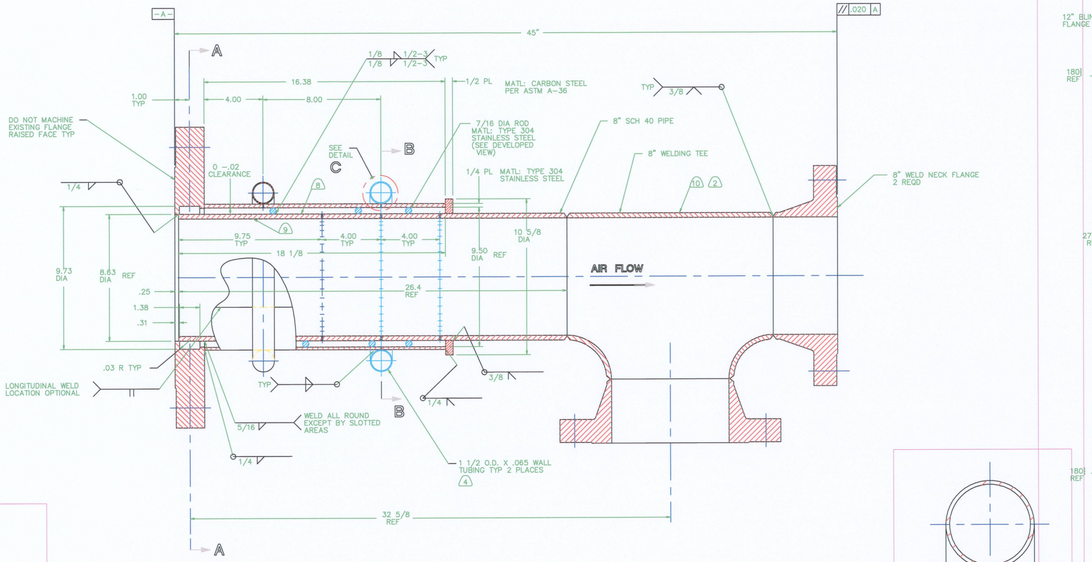

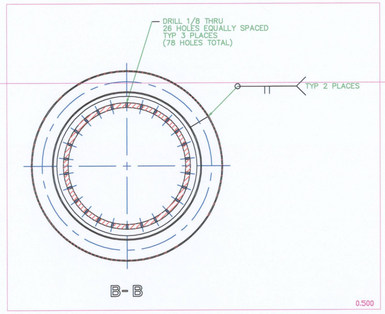

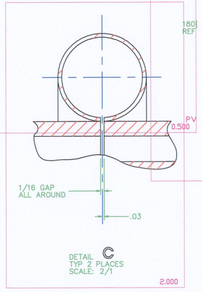

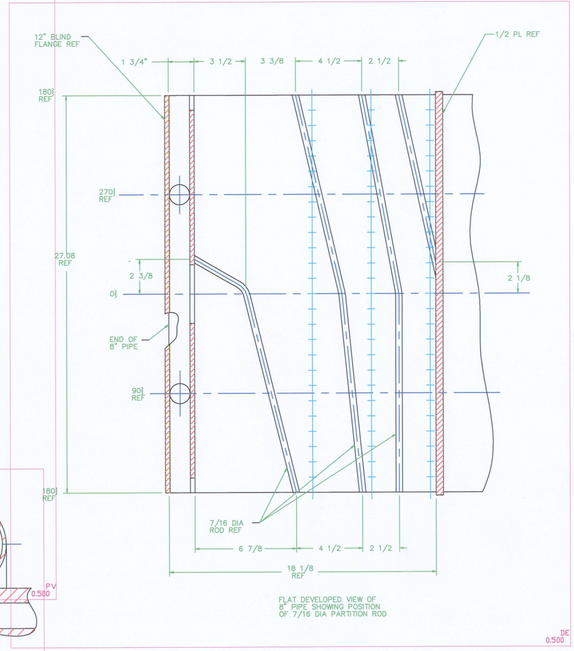

1. PIPE SHALL BE SEAMLESS, CARBON STEEL PER ASTM A106 GRADE B.
2. PIPE FITTINGS SHALL BE SEAMLESS, BUTTWELD TYPE PER ANSI B16.9 AND SHALL BE CARBO STEEL PER ASTM A234 WPB.
3. FLANGES SHALL BE CLASS 300 PE ANSI B16.5, AND SHALL BE CARBON STEEL PER ASTM A105. FLANGE BOLT HOLES SHALL STRADDLE CENTERLINES.
4. TUBING SHALL BE SEAMLESS TYPE 304 STAINLESS STEEL PER ASTM A213/A269.
5. ALL WELDED JOINTS SHALL CONFORM TO LATEST CODE FOR PRESSURE PIPING, ANSI B31.3, CHAPTER V.
6. ALL ROOT PASS WELDS SHALL BE GTAW OR GMAW WELDS USING ARG AS BOTH THE COVER AND BACK-U GAS. ALL SUBSEQUENT PASSES MA BE COMPLETED BY ANY CONVENTIONAL METAL-ARC PROCE
7. ALL PIPE WELDS SHALL BE LIQUID PENETRANT INSPECTED PER THE LATEST ASME BOILER AND PRESSURE VESSEL CODE, SECTION VIII, DIVISION I, APPENDIX VIII USING A WATER WASHABLE POST EMULSIFIED DYE PENETRANT.
8. ELECTROLYS NICKEL PLATE ALL WATER JACKETED CARBON STEEL SURFACES (INCLUDING THE FLANGE AND 8" PIPE) THAT WILL BE EXPOSED TO WATER. THE MINIMUM NICKEL THICKNESS WILL BE .005 INCH.
9. AFTER THE HYDRO TEST, APPLY A YTTRIA STABILIZED ZIRCONIUM OXIDE THERMAL BARRIER COATING .015-.020 THICK WITH A .005-.006 THICK NICRALY UNDERCOAT, TO THE INSIDE DIAMETER (GAS SIDE) OF THE 8" PIPE AND UPSTREAM OF THE 1/8" HOLES.
10. ELECTRIC ETCH PART NUMBER 28272M42A001 ON SPECIFIED SURFACE PER AMS 2800 (ZONE F
11. HYDROSTATICALLY PRESSURE TEST THE PIPING TO 825 PSIG WITH NO LEAKAGE OR LOSS OF PRESSURE. THE HYDRO TEST SHALL CONFORM TO THE LATEST REVISION OF THE PRESSURE PIPING CODE, ANSI B31.3.
12. NORMAL OPERATING CONDITIONS:
    A. COMBUSTION AIR FLOW= 17 PPS (MAX)
    B. COMBUSTION AIR PRESSURE: 220 PSIG
    C. COMBUSTION GAS TEMPERATURE= 3600|F
    D. WATER FLOW= 165 GPM AT 280 PSIG
13. DESIGN CONDITIONS:
    A. PRESSURE (AIR PIPING AND WATER JACKET): 550 PSIG AT MAXIMUM METAL TEMPERATURE OF 782|F AT THE MAXIMUM OPERATING CONDITIONS IN NOTE 12.
14. QUANTITY: ONE REQUIRED

CKD	ZONE	DESCRIPTION	APPV
		REVISIONS	

&CONDWG
&DONOT
&FABORA
&DWD

UNLESS OTHERWISE SPECIFIED DIMENSIONS ARE IN INCHES		CONTRACT NAS3-25767 / CONTRACTOR ADF, INC.	NASA NATIONAL AERONAUTICS AND SPACE ADMINISTRATION LEWIS RESEARCH CENTER CLEVELAND,OHIO
TOLERANCES ON		DATE MAR 0033	
.X	±.01	APPROVED G.LUNG	
.XX	±.	DRAFTER	
.XXX			
FRACTION	±1/16	ENGINEER R. BUEHRLE	RCS COMBUSTOR ASSEMBLY
ANGULAR	±0| 30'	DESIGNER F.JASKO	S.CAE-5, BLDG 5
BREAK EDGES .01-.02		CAD GROUP &CGP	CAD SUBGROUP &SBGP
CADAM UNITS = INCHES		SCALE 1/2	DATE 07/09/90
REL OF CADAM MODULE .01			

SIZE	DRAWING NUMBER	REV	SCHT	SHT	BLDG
B	28272M42A001	—	&CS	1	5

SHEET .01 OF

DRAWING NUMBER	REV	SCHT	SHT
28272M42A001	—	&CS	01