1. MATERIAL: 6061-T6 ALUMINUM, TOOLING. PLATE, .500 THICK.

2. 63 Ra ALL MACHINED SURFACES.

3. SURFACE TREATMENT PER MIL-C-5541, CLASS 3. USE IRIDITE 14.2 OR REQUESTER APPROVED EQUAL PER MIL-DTL-81706, CLASS 3, FORM II, METHOD B OR C, AS APPLICABLE. SPOT TOUCH UP BY METHOD B.

4. IDENTIFY PART WITH DRAWING NUMBER 140202MRA082 ON SPECIFIED SURFACE BY EITHER:
   - ELECTROCHEMICAL ETCH PER SAE-AS478, METHOD 7A,
   OR
   - LASER ENGRAVE PER SAE-AS478, METHOD 15B1.
   LOCATE APPROX. AS SHOWN (ZONE C4).

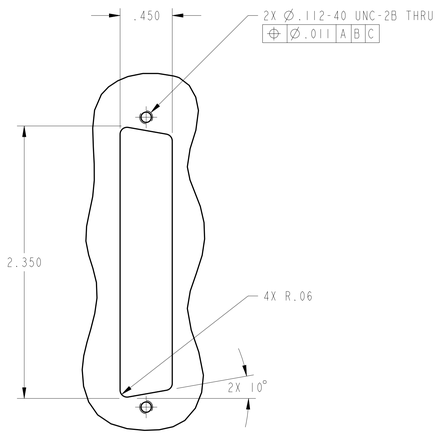

DETAIL A
SCALE 2/1
(D-CONNECTOR PANEL CUTOUT)

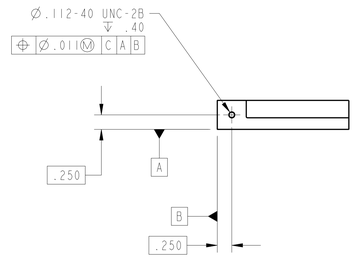

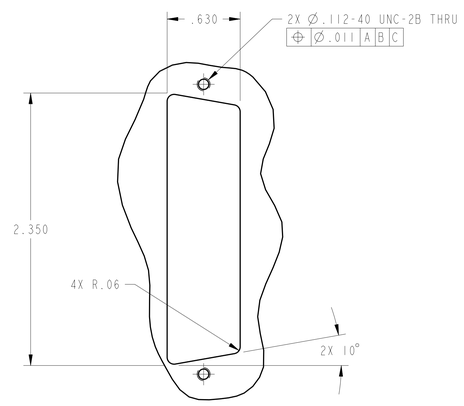

DETAIL B
SCALE 2/1
(D-CONNECTOR PANEL CUTOUT)

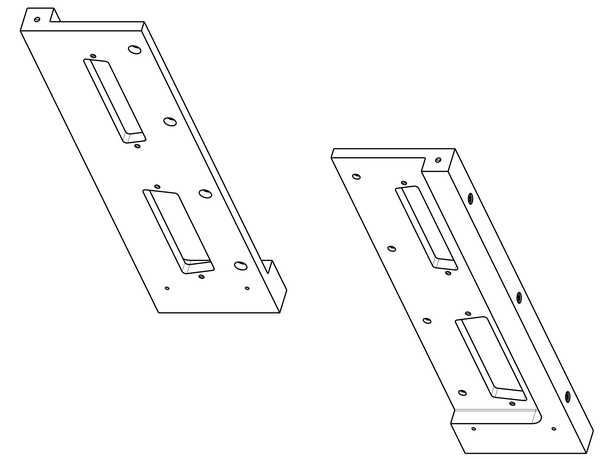

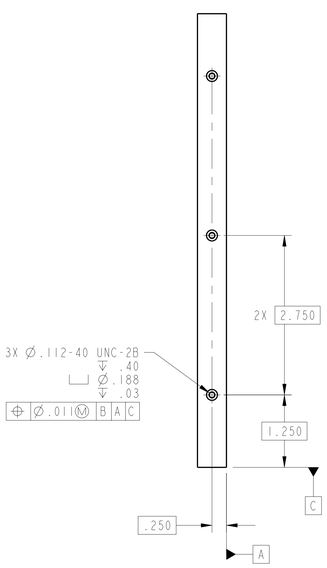

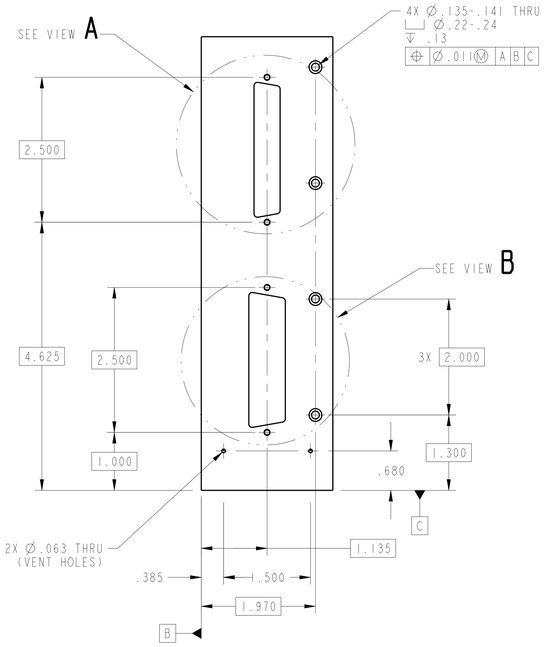

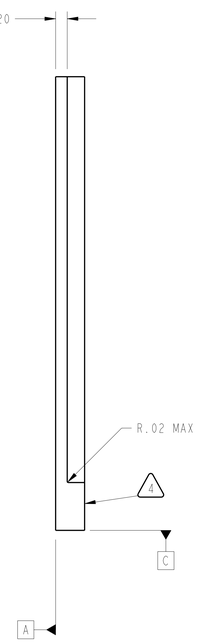

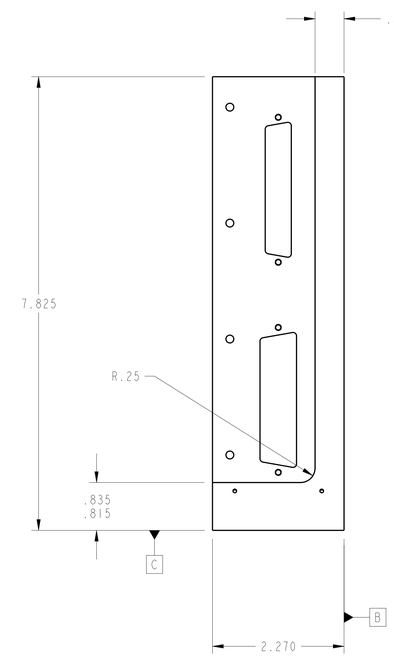

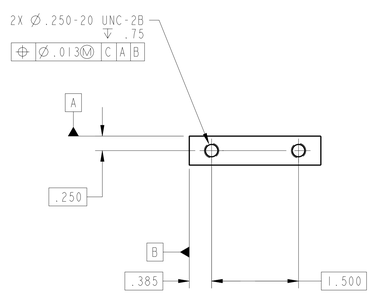

REV	CHG	ZONE	DESCRIPTION	APP/DATE
A	H1		ADDED IRIDITE NOTE	AB 04/10/15
	F5		ADDED DETAIL VIEW B, PANEL CUTOUT AND MOUNTING HOLES	RC 09/11/14
	F8		ADDED DETAIL VIEW A, PANEL CUTOUT AND MOUNTING HOLES	

REVISIONS

PRIOR TO USE VERIFY THE INTENDED PURPOSE IN PDM ("FOR" ATTRIBUTE)

UNLESS OTHERWISE SPECIFIED DIMENSIONS ARE IN INCHES

CONTRACT
CONTRACTOR
TASK ORDER

TOLERANCE ON			
.X	± 0.03	DRAFTER	DEZ/CLAPPER
.XX	± 0.01	ENGINEER	DES/TRIMARCHI
.XXX	± 0.005	DESIGNER	DEZ/CLAPPER
FRACTION	± -	DIMENSIONING AND TOLERANCING PER ASME Y14.5M-1994	
ANGULAR	± 0.50°		
BREAK EDGES	.01-.02		

PDM REL LEVEL: **Released** PDM REVISION: A

PDM DATABASE: 140202_HP-120V_PPU
MODEL NAME: 140202_SCM_FRONT_PLATE
CHECK FOR ANY OUTSTANDING ECO'S PRIOR TO USE

NATIONAL AERONAUTICS AND SPACE ADMINISTRATION
JOHN H. GLENN RESEARCH CENTER
LEWIS FIELD
CLEVELAND, OHIO

SCM CHASSIS ASSEMBLY
140202MRA081

A082 SCM FRONT PLATE

SIZE	DRAWING NUMBER	REV	BLDG	AREA
E	140202MRA082	A	301	-
			UNITS: INCH	
SCALE: 1/1	INITIAL REL DATE 05/23/2014	SHEET 1 OF 1	DISCIPLINE MECHANICAL	

PRO/E VERSION: Wildfire 5.0

SIZE E DRAWING NUMBER 140202MRA082 REV A

NAME:DREDGING OBJECT:140202_SCM_FRONT_PLATE DATE:16-Apr-15 10:28: