COMMERCIAL PARTS LIST

BALLOON NO	DESCRIPTION	QTY/ ASSY
1	1/2" ATCR SOCKET WELD ATLAS BIMETALLIC FACE-SEAL FITTING (12.7mm) ZERO CLEARANCE, ATLAS TECHNOLOGIES PART NUMBER ATCRBI-SW7030 (OR EQUIVALENT).	2
2	1/2" ATCR FEMALE NUT-SS, ATLAS TECHNOLOGIES PART NUMBER ATCRHW-TO10-06 (OR EQUIVALENT).	2

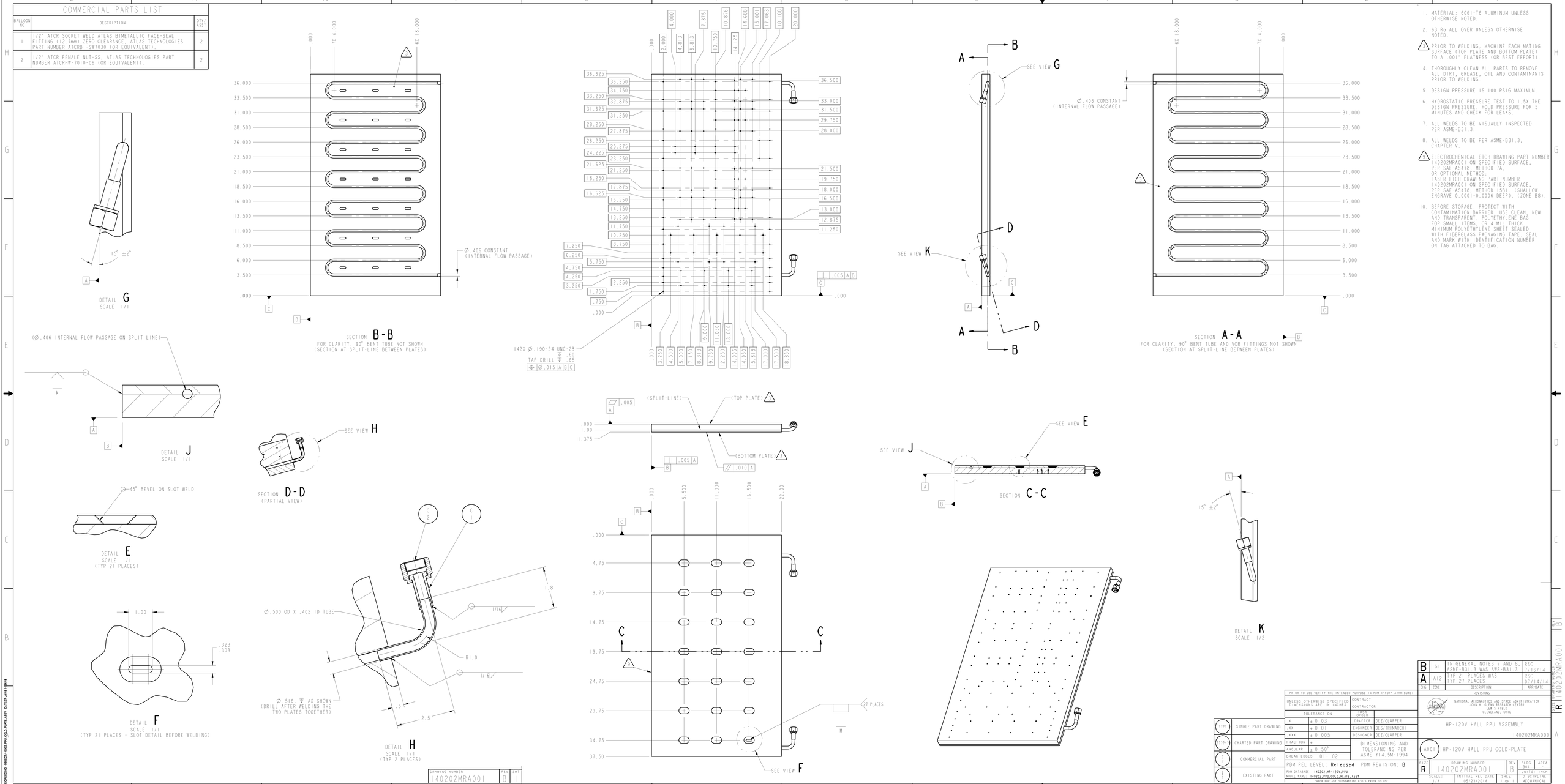

1. MATERIAL: 6061-T6 ALUMINUM UNLESS OTHERWISE NOTED.
2. 63 Ra ALL OVER UNLESS OTHERWISE NOTED.
3. PRIOR TO WELDING, MACHINE EACH MATING SURFACE (TOP PLATE AND BOTTOM PLATE) TO A .001" FLATNESS (OR BEST EFFORT).
4. THOROUGHLY CLEAN ALL PARTS TO REMOVE ALL DIRT, GREASE, OIL AND CONTAMINANTS PRIOR TO WELDING.
5. DESIGN PRESSURE IS 100 PSIG MAXIMUM.
6. HYDROSTATIC PRESSURE TEST TO 1.5X THE DESIGN PRESSURE. HOLD PRESSURE FOR 5 MINUTES AND CHECK FOR LEAKS.
7. ALL WELDS TO BE VISUALLY INSPECTED PER ASME-B31.3.
8. ALL WELDS TO BE PER ASME-B31.3, CHAPTER V.
9. ELECTROCHEMICAL ETCH DRAWING PART NUMBER 140202MRA001 ON SPECIFIED SURFACE, PER SAE-AS478, METHOD 7A, OR OPTIONAL METHOD: LASER ETCH DRAWING PART NUMBER 140202MRA001 ON SPECIFIED SURFACE, PER SAE-AS478, METHOD 15B1. (SHALLOW ENGRAVE 0.0001-0.0006 DEEP). (ZONE B8).
10. BEFORE STORAGE, PROTECT WITH CONTAMINATION BARRIER. USE CLEAN, NEW AND TRANSPARENT, POLYETHYLENE BAG FOR SMALL ITEMS, OR 4 MIL THICK MINIMUM POLYETHYLENE SHEET SEALED WITH FIBERGLASS PACKAGING TAPE. SEAL AND MARK WITH IDENTIFICATION NUMBER ON TAG ATTACHED TO BAG.

REV	ZONE	DESCRIPTION	APP/DATE
B	G1	IN GENERAL NOTES 7 AND 8, ASME-B31.3 WAS ANS-B31.3	RSC 7/16/14
A	A12	TYP 21 PLACES WAS TYP 27 PLACES	RSC 07/14/14

REVISIONS

PRIOR TO USE, VERIFY THE INTENDED PURPOSE IN PDM ("FOR" ATTRIBUTE)

UNLESS OTHERWISE SPECIFIED DIMENSIONS ARE IN INCHES

TOLERANCE ON	
.X	± 0.03
.XX	± 0.01
.XXX	± 0.005
FRACTION	±
ANGULAR	± 0.50°
BREAK EDGES	.01-.02

CONTRACT
CONTRACTOR
TASK ORDER

DRAFTER	DEZ/CLAPPER
ENGINEER	DES/TRIMARCHI
DESIGNER	DEZ/CLAPPER

DIMENSIONING AND TOLERANCING PER ASME Y14.5M-1994

PDM REL LEVEL: **Released** PDM REVISION: **B**

PDM DATABASE: **140202.HP-120V.PPU**
MODEL NAME: **140202_PPU_COLD_PLATE_ASSY**
CHECK FOR ANY OUTSTANDING ECO'S PRIOR TO USE

NATIONAL AERONAUTICS AND SPACE ADMINISTRATION
JOHN H. GLENN RESEARCH CENTER
LEWIS FIELD
CLEVELAND, OHIO

HP-120V HALL PPU ASSEMBLY

140202MRA000

A001 HP-120V HALL PPU COLD-PLATE

SIZE R | DRAWING NUMBER 140202MRA001 | REV B | BLOCK 301 | AREA

SCALE 1/2 | INITIAL REL DATE 05/23/2014 | SHEET 1 OF 1 | UNITS INCH | DISCIPLINE MECHANICAL

PRO/E VERSION: Wildfire 5.0

????	SINGLE PART DRAWING
????	CHARTED PART DRAWING
C	COMMERCIAL PART
E	EXISTING PART

DRAWING NUMBER 140202MRA001 | REV B | SHT 1

WWW.CREOSONS OBJECT:140202_PPU_COLD_PLATE_ASSY DATE:07-Jul-15 09:15

1. MATERIAL: 3/8" THICK, 6061-T6 ALUMINUM, TOOLING PLATE.

2. 125 Ra ALL MACHINED SURFACES.

3. ELECTROCHEMICAL ETCH DRAWING PART NUMBER 140202MRA012 ON SPECIFIED SURFACE, PER SAE-AS478, METHOD 7A, OR OPTIONAL METHOD: LASER ETCH DRAWING PART NUMBER 140202MRA012 ON SPECIFIED SURFACE, PER SAE-AS478, METHOD 15B1. (SHALLOW ENGRAVE 0.0001-0.0006 DEEP). (ZONE G5).

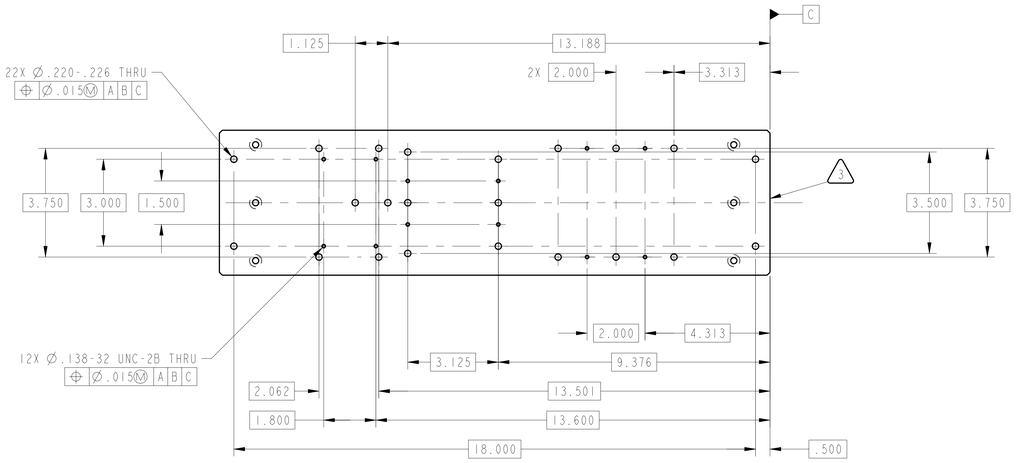

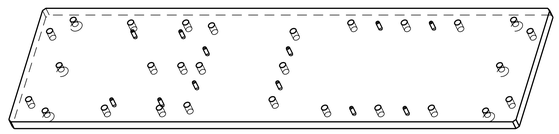

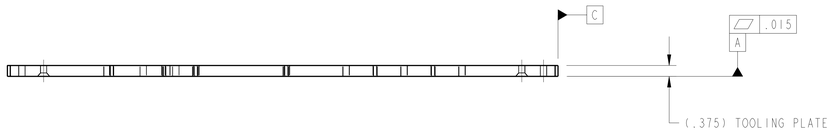

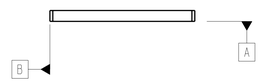

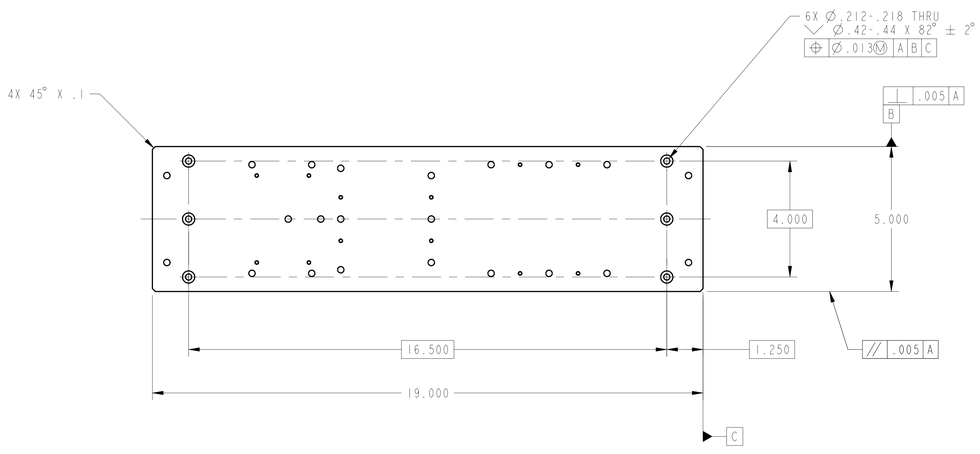

PRIOR TO USE VERIFY THE INTENDED PURPOSE IN PDM ("FOR" ATTRIBUTE)			
UNLESS OTHERWISE SPECIFIED DIMENSIONS ARE IN INCHES		CONTRACT / CONTRACTOR	
TOLERANCE ON		TASK ORDER	
.X	± 0.03	DRAFTER	DEZ/CLAPPER
.XX	± 0.01	ENGINEER	DES/TRIMARCHI
.XXX	± 0.005	DESIGNER	DEZ/CLAPPER
FRACTION	± -	DIMENSIONING AND TOLERANCING PER ASME Y14.5M-1994	
ANGULAR	± 0.50°		
BREAK EDGES	.01-.02		

PDM REL LEVEL: **Released** PDM REVISION: -

PDM DATABASE: 140202_HP-120V_PPU

MODEL NAME: 140202_DISCH_MOD_BASEPLATE

CHECK FOR ANY OUTSTANDING ECO'S PRIOR TO USE

CHG	ZONE	DESCRIPTION	APP/DATE

REVISIONS

NATIONAL AERONAUTICS AND SPACE ADMINISTRATION
JOHN H. GLENN RESEARCH CENTER
LEWIS FIELD
CLEVELAND, OHIO

DISCHARGE MODULE CHASSIS

140202MRA011

A012 DISCHARGE MODULE BASEPLATE

SIZE	DRAWING NUMBER	REV	BLDG	AREA
E	140202MRA012	-	301	-

UNITS: INCH

SCALE:	INITIAL REL DATE	SHEET	DISCIPLINE
1/2	03/24/2014	1 OF 1	MECHANICAL

PRO/E VERSION: Wildfire 5.0

SIZE E DRAWING NUMBER 140202MRA012 REV -

A

NAME:DRGSDWG OBJECT:140202_DISCH_MOD_BASEPLATE DATE:30-Mar-15 12:27:18

1. MATERIAL: 6061-T6 ALUMINUM, TOOLING PLATE, .375 THICK.

2. 63 Ra ALL MACHINED SURFACES.

3. ELECTROCHEMICAL ETCH DRAWING PART NUMBER 140202MRA013 ON SPECIFIED SURFACE, PER SAE-AS478, METHOD 7A, OR OPTIONAL METHOD: LASER ETCH DRAWING PART NUMBER 140202MRA013 ON SPECIFIED SURFACE, PER SAE-AS478, METHOD 15B1. (SHALLOW ENGRAVE 0.0001-0.0006 DEEP). (ZONE D5).

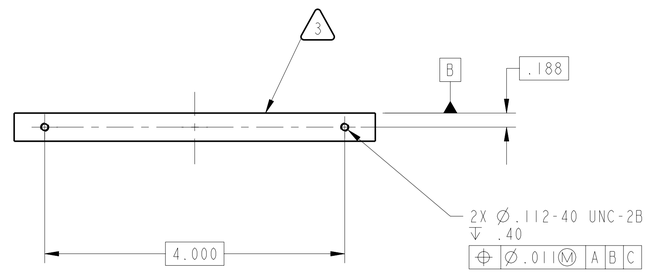

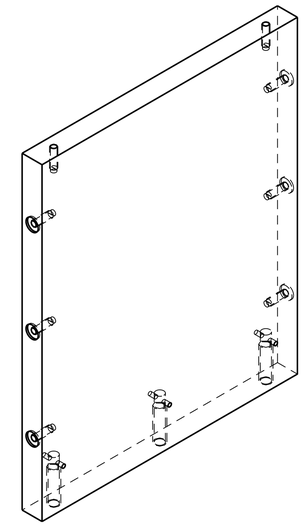

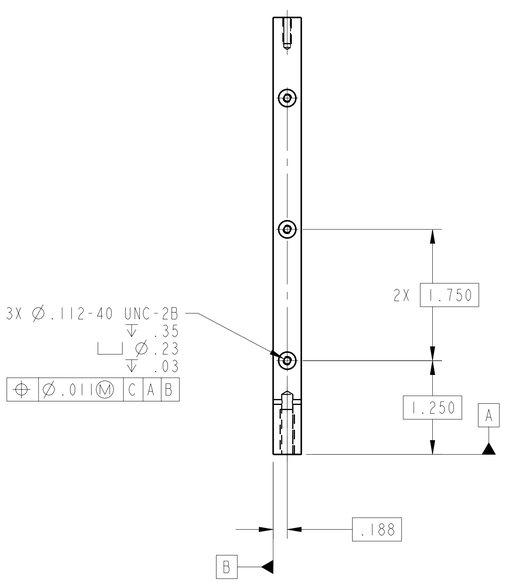

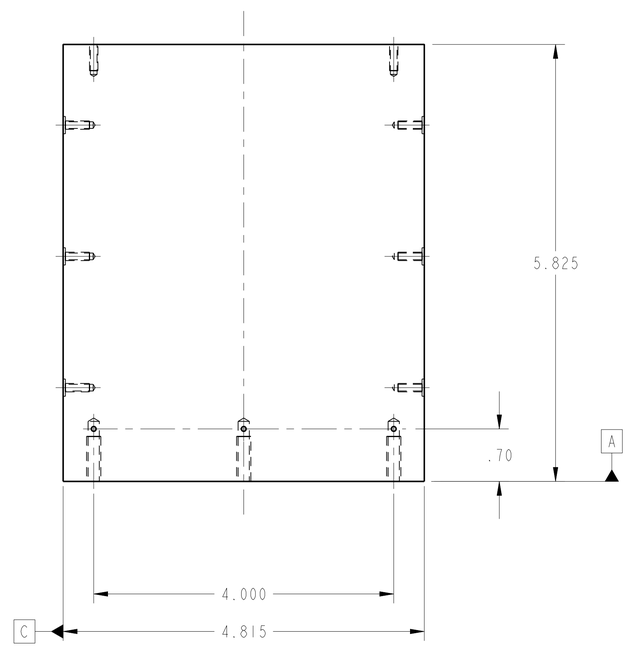

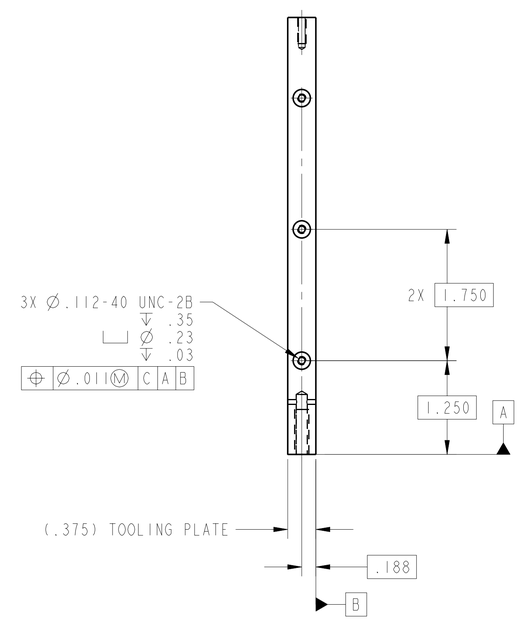

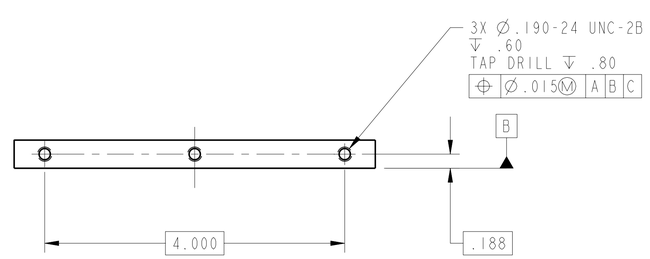

CHG	ZONE	DESCRIPTION	APP/DATE

REVISIONS

PRIOR TO USE VERIFY THE INTENDED PURPOSE IN PDM ("FOR" ATTRIBUTE)

UNLESS OTHERWISE SPECIFIED DIMENSIONS ARE IN INCHES

CONTRACT

CONTRACTOR

TOLERANCE ON		TASK ORDER	
.X	± 0.03	DRAFTER	DEZ/CLAPPER
.XX	± 0.01	ENGINEER	DES/TRIMARCHI
.XXX	± 0.005	DESIGNER	DEZ/CLAPPER
FRACTION	± -	DIMENSIONING AND TOLERANCING PER ASME Y14.5M-1994	
ANGULAR	± 0.50°		
BREAK EDGES	.01-.02		

PDM REL LEVEL: Released PDM REVISION: -

PDM DATABASE: 140202_HP-120V_PPU

MODEL NAME: 140202_DISCH_MOD_ENDPLT_FRONT

CHECK FOR ANY OUTSTANDING ECO'S PRIOR TO USE

NATIONAL AERONAUTICS AND SPACE ADMINISTRATION
JOHN H. GLENN RESEARCH CENTER
LEWIS FIELD
CLEVELAND, OHIO

DISCHARGE MODULE CHASSIS

140202MRA011

A013 DISCHARGE MOD FRONT PLATE

SIZE	DRAWING NUMBER	REV	BLDG	AREA
D	140202MRA013	-	301	-
			UNITS: INCH	
SCALE: 1/1	INITIAL REL DATE 03/24/2014	SHEET 1 OF 1	DISCIPLINE MECHANICAL	

PRO/E VERSION: Wildfire 5.0

SIZE D DRAWING NUMBER 140202MRA013 REV -

NAME:CREDDING OBJECT:140202_DISCH_MOD_ENDPLT_FRONT DATE:30-Mar-15 10:29:46

1. MATERIAL: 6061-T6 ALUMINUM, TOOLING PLATE, .500 THICK.

2. 63 Ra ALL MACHINED SURFACES.

3. ELECTROCHEMICAL ETCH DRAWING PART NUMBER 140202MRA014 ON SPECIFIED SURFACE, PER SAE-AS478, METHOD 7A, OR OPTIONAL METHOD: LASER ETCH DRAWING PART NUMBER 140202MRA014 ON SPECIFIED SURFACE, PER SAE-AS478, METHOD 15B1. (SHALLOW ENGRAVE 0.0001-0.0006 DEEP). (ZONE D5).

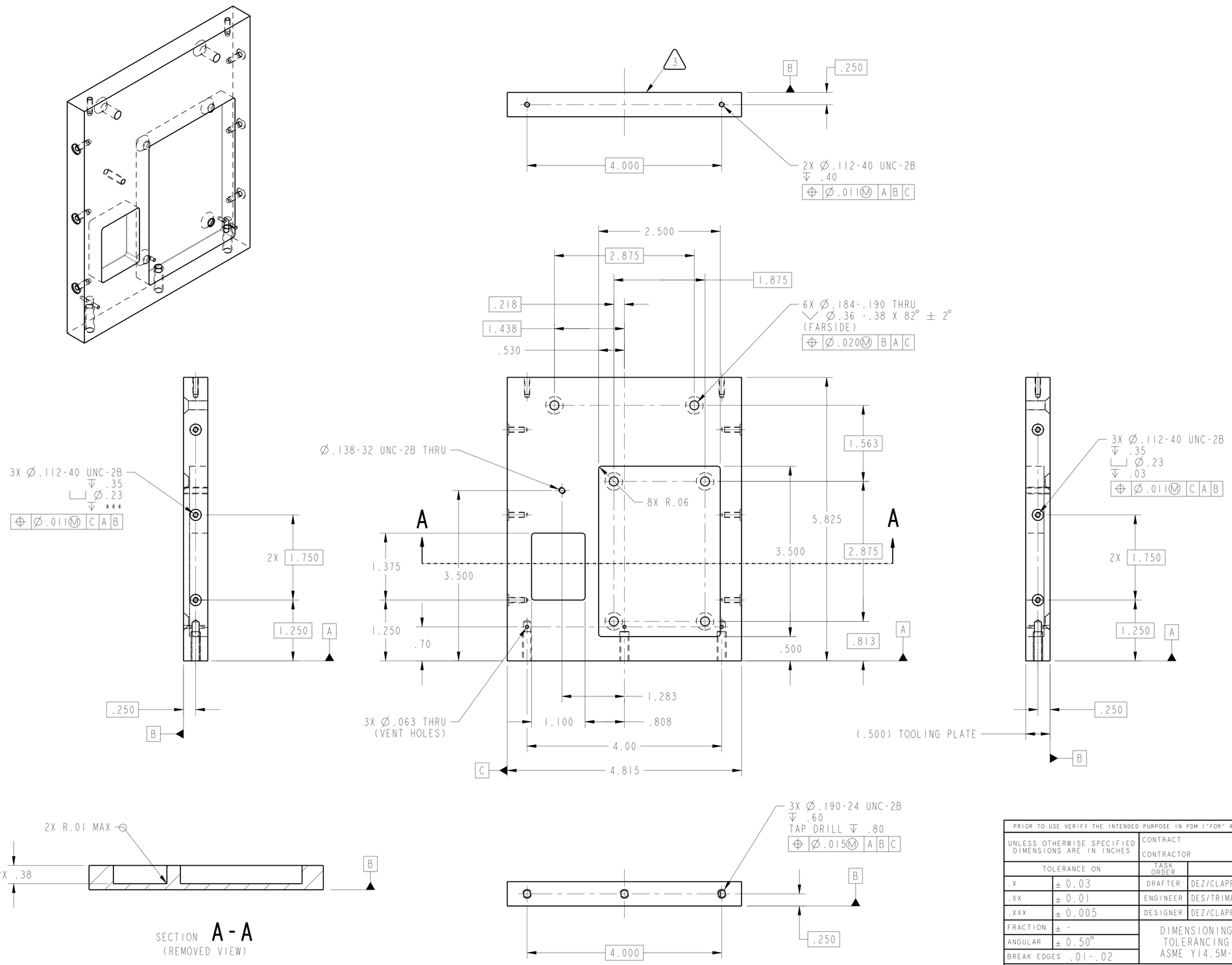

CHG	ZONE	DESCRIPTION	APP/DATE
A	-	ADDED DIMENSIONS TO LOCATE HOLES AND POCKETS	RSC 07/14/14
	C4	ADDED 6X Ø.184-.190 THRU Ø.36-.38 X 82° ± 2° (FARSIDE) AND TRUE POSITION GTOL FCF	
	C6	ADDED Ø.138-32 UNC-2B THRU	
	A7	ADDED REMOVED VIEW SECTION VIEW A-A	
		ADDED TWO POCKETS	

REVISIONS

PRIOR TO USE VERIFY THE INTENDED PURPOSE IN PDM ("FOR" ATTRIBUTE)

UNLESS OTHERWISE SPECIFIED DIMENSIONS ARE IN INCHES

CONTRACT

CONTRACTOR

TOLERANCE ON		TASK ORDER	
.X	± 0.03	DRAFTER	DEZ/CLAPPER
.XX	± 0.01	ENGINEER	DES/TRIMARCHI
.XXX	± 0.005	DESIGNER	DEZ/CLAPPER
FRACTION	± -	DIMENSIONING AND TOLERANCING PER ASME Y14.5M-1994	
ANGULAR	± 0.50°		
BREAK EDGES	.01-.02		

PDM REL LEVEL: Released PDM REVISION: A

PDM DATABASE: 140202_HP-120V_PPU

MODEL NAME: 140202_DISCH_MOD_ENDPLATE

CHECK FOR ANY OUTSTANDING ECO'S PRIOR TO USE

NATIONAL AERONAUTICS AND SPACE ADMINISTRATION
JOHN H. GLENN RESEARCH CENTER
LEWIS FIELD
CLEVELAND, OHIO

DISCHARGE MODULE CHASSIS

140202MRA011

A014 DISCHARGE MOD REAR PLATE

SIZE	DRAWING NUMBER	REV	BLDG	AREA
D	140202MRA014	A	301	-
			UNITS: INCH	

SCALE:	INITIAL REL DATE	SHEET	DISCIPLINE
1/1	03/24/2014	1 OF 1	MECHANICAL

PRO/E VERSION: Wildfire 5.0

SIZE D DRAWING NUMBER 140202MRA014 REV A

NAME:CREDDING OBJECT:140202_DISCH_MOD_ENDPLATE DATE:30-Mar-15 10:31:49

1. MATERIAL: 6061-T6 ALUMINUM SHEET (16ga.)

2. 125 Ra ALL MACHINED SURFACES.

3. ELECTROCHEMICAL ETCH DRAWING PART NUMBER 140202MRA015 ON SPECIFIED SURFACE, PER SAE-AS478, METHOD 7A, OR OPTIONAL METHOD: LASER ETCH DRAWING PART NUMBER 140202MRA015 ON SPECIFIED SURFACE, PER SAE-AS478, METHOD 15B1. (SHALLOW ENGRAVE 0.0001-0.0006 DEEP). (ZONE B2).

4. THE NASA UNDERSTANDS AND DESIRES THAT THE Ø.128 -.134 THRU HOLE WILL BE ELIMINATED DURING THE FABRICATION OF THE COUNTER-SUNK FEATURE. THUS NO INSPECTION OF THE THRU HOLE IS REQUIRED, NOR IS IT EVEN POSSIBLE (SEE ZONE B6).

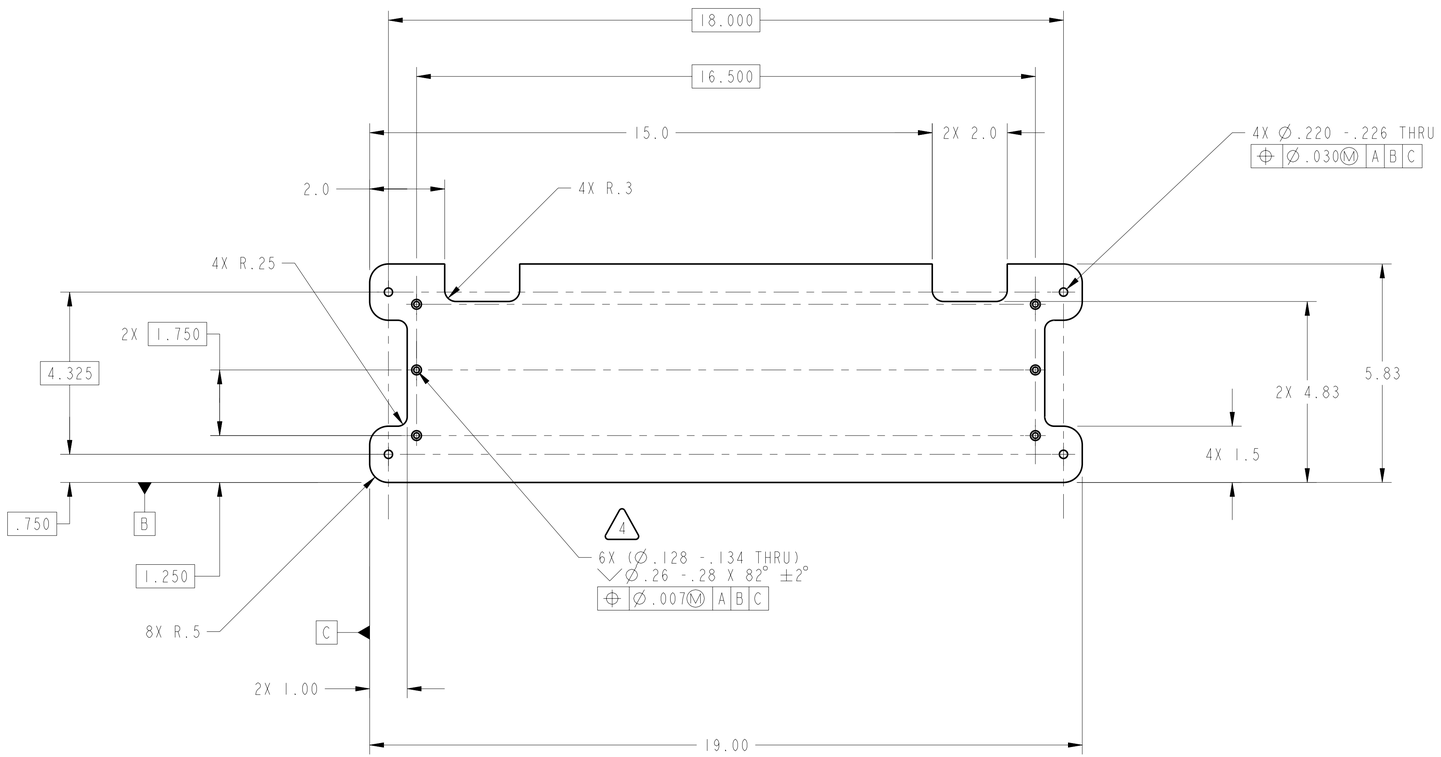

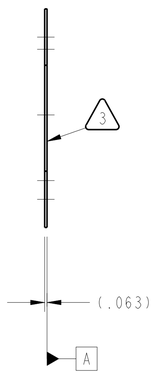

CHG	ZONE	DESCRIPTION	APP/DATE
A	D1	ADDED FLAG NOTE 4	RSC 06/23/14
	B6	6X (Ø.128-.134 THRU) Ø.26-.28 X 82° ±2° WAS 6X Ø.128-.134 THRU Ø.26-.27 X 82°	

REVISIONS

PRIOR TO USE VERIFY THE INTENDED PURPOSE IN PDM ("FOR" ATTRIBUTE)

UNLESS OTHERWISE SPECIFIED DIMENSIONS ARE IN INCHES

CONTRACT

CONTRACTOR

TOLERANCE ON	
.X	± 0.03
.XX	± 0.01
.XXX	± 0.005
FRACTION	± -
ANGULAR	± 0.50°
BREAK EDGES	.01 - .02

TASK ORDER	
DRAFTER	DEZ/CLAPPER
ENGINEER	DES/TRIMARCHI
DESIGNER	DEZ/CLAPPER

DIMENSIONING AND TOLERANCING PER ASME Y14.5M-1994

NATIONAL AERONAUTICS AND SPACE ADMINISTRATION
JOHN H. GLENN RESEARCH CENTER
LEWIS FIELD
CLEVELAND, OHIO

DISCHARGE MODULE CHASSIS

140202MRA011

A015 MODULE SIDE COVER

PDM REL LEVEL: Released PDM REVISION: A

PDM DATABASE: 140202_HP-120V_PPU

MODEL NAME: 140202_SLOTTED_SIDE_COVER

CHECK FOR ANY OUTSTANDING ECO'S PRIOR TO USE

SIZE	DRAWING NUMBER	REV	BLDG	AREA
D	140202MRA015	A	301	-
			UNITS: INCH	

SCALE:	INITIAL REL DATE	SHEET	DISCIPLINE
1/2	03/24/2014	1 OF 1	MECHANICAL

PRO/E VERSION: Wildfire 5.0

SIZE D DRAWING NUMBER 140202MRA015 REV A

NAME:CREDDING OBJECT:140202_SLOTTED_SIDE_COVER DATE:30-Mar-15 10:58:12

1. MATERIAL: 6061-T6 ALUMINUM SHEET (16ga.)

2. 125Ra ALL MACHINED SURFACES.

3. ELECTROCHEMICAL ETCH DRAWING PART NUMBER 140202MRA016 ON SPECIFIED SURFACE, PER SAE-AS478, METHOD 7A, OR OPTIONAL METHOD: LASER ETCH DRAWING PART NUMBER 140202MRA016 ON SPECIFIED SURFACE, PER SAE-AS478, METHOD 15B1. (SHALLOW ENGRAVE 0.0001-0.0006 DEEP). (ZONE C7).

4. THE NASA UNDERSTANDS AND DESIRES THAT THE Ø.128 -.134 THRU HOLE WILL BE ELIMINATED DURING THE FABRICATION OF THE COUNTER-SUNK FEATURE. THUS NO INSPECTION OF THE THRU HOLE IS REQUIRED, NOR IS IT EVEN POSSIBLE (SEE ZONE C6).

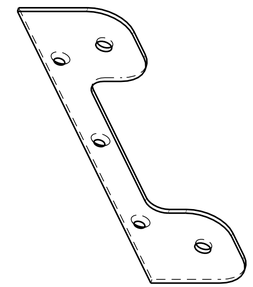

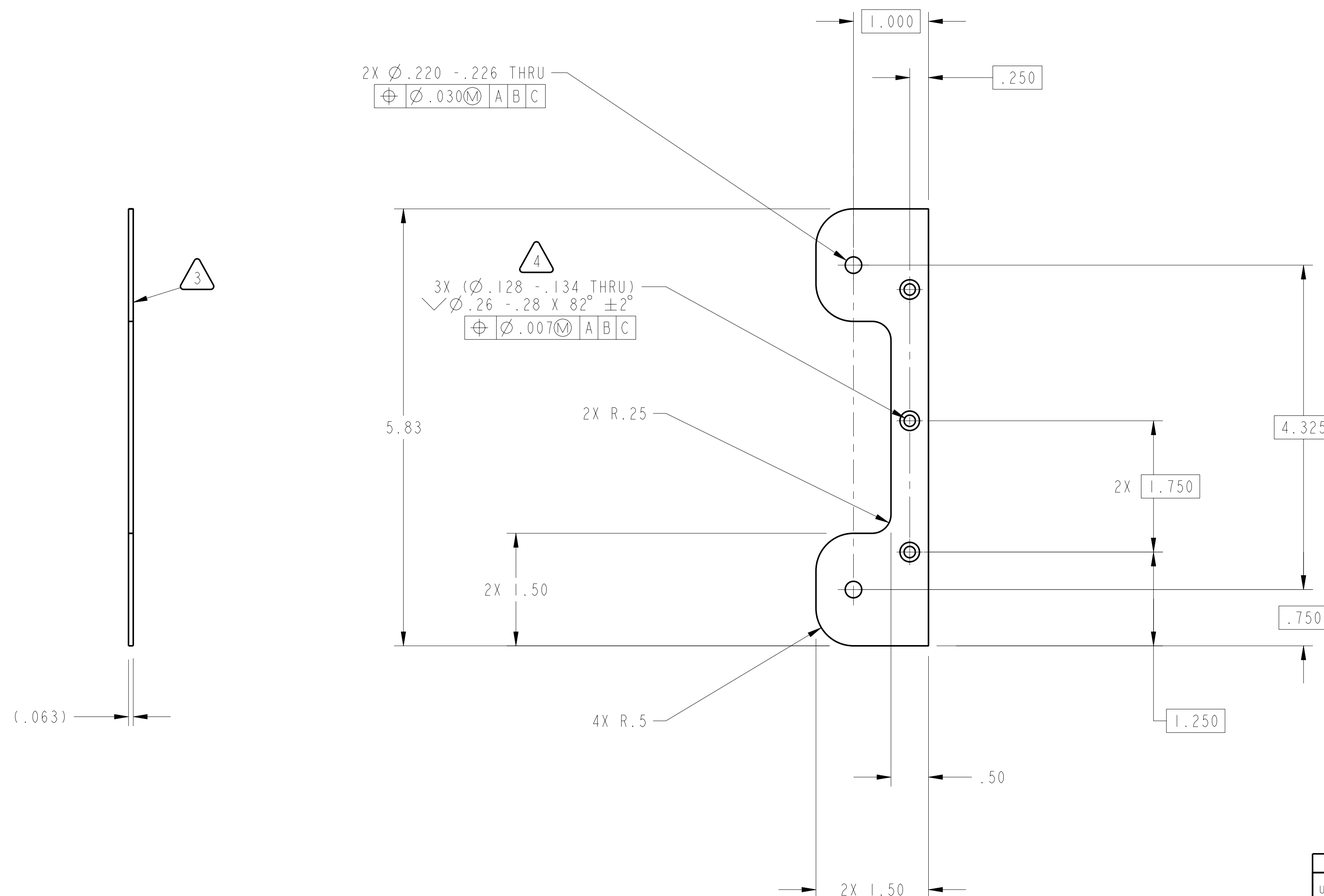

CHG	ZONE	DESCRIPTION	APP/DATE
A	D1	ADDED FLAG NOTE 4	RSC 06/23/14
	C6	3X (Ø.128-.134 THRU) ⌵Ø.26-.28 X 82° ±2° WAS 3X Ø.128-.134 THRU ⌵ Ø.26-.27 x 82°	

REVISIONS

PRIOR TO USE VERIFY THE INTENDED PURPOSE IN PDM ("FOR" ATTRIBUTE)

UNLESS OTHERWISE SPECIFIED DIMENSIONS ARE IN INCHES

CONTRACT

CONTRACTOR

TOLERANCE ON		TASK ORDER	
.X	± 0.03	DRAFTER	DEZ/CLAPPER
.XX	± 0.01	ENGINEER	DES/TRIMARCHI
.XXX	± 0.005	DESIGNER	DEZ/CLAPPER
FRACTION	± -	DIMENSIONING AND TOLERANCING PER ASME Y14.5M-1994	
ANGULAR	± 0.50°		
BREAK EDGES	.01-.02		

PDM REL LEVEL: Released PDM REVISION: A

PDM DATABASE: 140202_HP-120V_PPU

MODEL NAME: 140202_MOD_INTERFACE_PLT_FRONT

CHECK FOR ANY OUTSTANDING ECO'S PRIOR TO USE

NATIONAL AERONAUTICS AND SPACE ADMINISTRATION
JOHN H. GLENN RESEARCH CENTER
LEWIS FIELD
CLEVELAND, OHIO

DISCHARGE MODULE CHASSIS

140202MRA011

A016 MODULE FRONT INTERFACE PLATE

SIZE	DRAWING NUMBER	REV	BLDG	AREA
D	140202MRA016	A	301	-
			UNITS: INCH	
SCALE: 1/1	INITIAL REL DATE 03/24/2014	SHEET 1 OF 1	DISCIPLINE MECHANICAL	

PRO/E VERSION: Wildfire 5.0

SIZE D DRAWING NUMBER 140202MRA016 REV A

NAME:CREDDING OBJECT:140202_MOD_INTERFACE_PLT_FRONT DATE:30-Mar-15 11:00:16

1. MATERIAL: 6061-T6 ALUMINUM SHEET (16ga.)

2. 125Ra ALL MACHINED SURFACES.

3. ELECTROCHEMICAL ETCH DRAWING PART NUMBER 140202MRA017}} ON SPECIFIED SURFACE, PER SAE-AS478, METHOD 7A, OR OPTIONAL METHOD: LASER ETCH DRAWING PART NUMBER 140202MRA017}} ON SPECIFIED SURFACE, PER SAE-AS478, METHOD 15B1. (SHALLOW ENGRAVE 0.0001-0.0006 DEEP). (ZONE C3).

4. THE NASA UNDERSTANDS AND DESIRES THAT THE Ø.128 -.134 THRU HOLE WILL BE ELIMINATED DURING THE FABRICATION OF THE COUNTER-SUNK FEATURE. THUS NO INSPECTION OF THE THRU HOLE IS REQUIRED, NOR IS IT EVEN POSSIBLE (SEE ZONE C5).

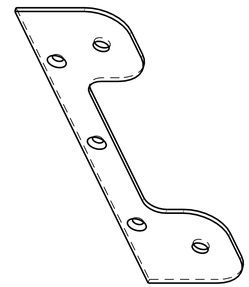

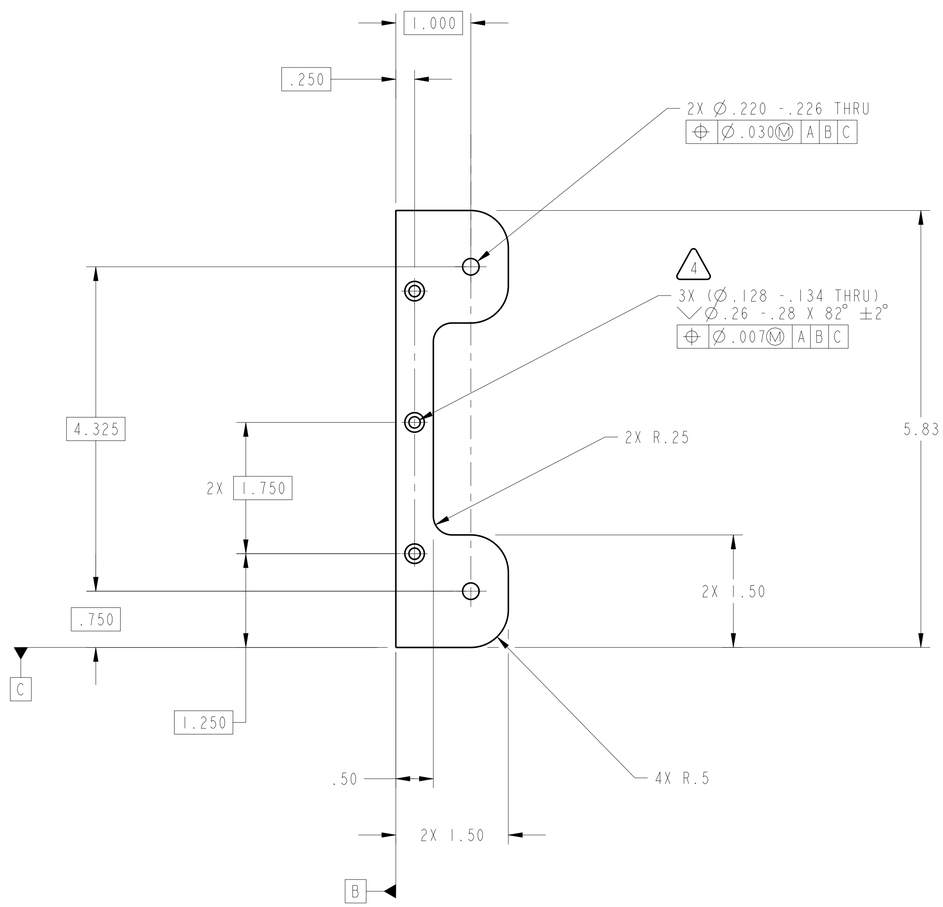

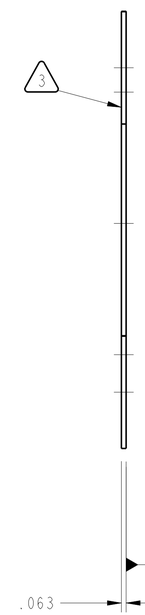

CHG	ZONE	DESCRIPTION	APP/DATE
A	D1	ADDED FLAG NOTE 4	RSC 06/23/14
	C5	3X (Ø.128-.134 THRU) Ø.26-.28 X 82° X ±2° WAS 3X Ø.128-.134 THRU Ø.26-.27	

REVISIONS

PRIOR TO USE VERIFY THE INTENDED PURPOSE IN PDM ("FOR" ATTRIBUTE)

UNLESS OTHERWISE SPECIFIED DIMENSIONS ARE IN INCHES

CONTRACT

CONTRACTOR

TOLERANCE ON		TASK ORDER	
.X	± 0.03	DRAFTER	DEZ/CLAPPER
.XX	± 0.01	ENGINEER	DES/TRIMARCHI
.XXX	± 0.005	DESIGNER	DEZ/CLAPPER
FRACTION	± -	DIMENSIONING AND TOLERANCING PER ASME Y14.5M-1994	
ANGULAR	± 0.50°		
BREAK EDGES	.01 - .02		

PDM REL LEVEL: **Released** PDM REVISION: **A**

PDM DATABASE: **140202_HP-120V_PPU**

MODEL NAME: **140202_MOD_INTERFACE_PLT_REAR**

CHECK FOR ANY OUTSTANDING ECO'S PRIOR TO USE

NATIONAL AERONAUTICS AND SPACE ADMINISTRATION
JOHN H. GLENN RESEARCH CENTER
LEWIS FIELD
CLEVELAND, OHIO

DISCHARGE MODULE CHASSIS

140202MRA011

A017 MODULE REAR INTERFACE PLATE

SIZE	DRAWING NUMBER	REV	BLDG	AREA
D	140202MRA017	A	301	-

UNITS: INCH

SCALE:	INITIAL REL DATE	SHEET	DISCIPLINE
1/1	03/24/2014	1 OF 1	MECHANICAL

PRO/E VERSION: Wildfire 5.0

SIZE D DRAWING NUMBER 140202MRA017 REV A

NAME:CREDDING OBJECT:140202_MOD_INTERFACE_PLT_REAR DATE:30-Mar-15 11:03:53

1. MATERIAL: 6061-T6 ALUMINUM SHEET (16ga.)

2. 125 Ra ALL MACHINED SURFACES.

3. ELECTROCHEMICAL ETCH DRAWING PART NUMBER 140202MRA018 ON SPECIFIED SURFACE, PER SAE-AS478, METHOD 7A, OR OPTIONAL METHOD: LASER ETCH DRAWING PART NUMBER 140202MRA018 ON SPECIFIED SURFACE, PER SAE-AS478, METHOD 15B1. (SHALLOW ENGRAVE 0.0001-0.0006 DEEP). (ZONE B6).

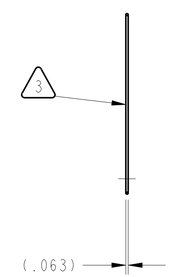

CHG	ZONE	DESCRIPTION	APP/DATE

REVISIONS

PRIOR TO USE VERIFY THE INTENDED PURPOSE IN PDM ("FOR" ATTRIBUTE)

UNLESS OTHERWISE SPECIFIED DIMENSIONS ARE IN INCHES

CONTRACT

CONTRACTOR

TOLERANCE ON		TASK ORDER	
.X	± 0.03	DRAFTER	DEZ/CLAPPER
.XX	± 0.01	ENGINEER	DES/TRIMARCHI
.XXX	± 0.005	DESIGNER	DEZ/CLAPPER
FRACTION	± -	DIMENSIONING AND TOLERANCING PER ASME Y14.5M-1994	
ANGULAR	± 0.50°		
BREAK EDGES	.01 - .02		

NATIONAL AERONAUTICS AND SPACE ADMINISTRATION
JOHN H. GLENN RESEARCH CENTER
LEWIS FIELD
CLEVELAND, OHIO

DISCHARGE MODULE CHASSIS

140202MRA011

A018 MODULE TOP COVER

PDM REL LEVEL: Released PDM REVISION: -

PDM DATABASE: 140202_HP-120V_PPU

MODEL NAME: 140202_DISCH_MOD_COVER

CHECK FOR ANY OUTSTANDING ECO'S PRIOR TO USE

SIZE	DRAWING NUMBER	REV	BLDG	AREA
D	140202MRA018	-	301	-
			UNITS: INCH	
SCALE: 1/2	INITIAL REL DATE 03/24/2014	SHEET 1 OF 1	DISCIPLINE MECHANICAL	

PRO/E VERSION: Wildfire 5.0

SIZE D DRAWING NUMBER 140202MRA018 REV -

NAME:CREDDING OBJECT:140202_DISCH_MOD_COVER DATE:30-Mar-15 11:05:18

11. MATERIAL: 6061-T6 ALUMINUM SHEET (16ga.)

22. 125 Ra ALL MACHINED SURFACES.

3. ELECTROCHEMICAL ETCH DRAWING PART NUMBER 140202MRA019 ON SPECIFIED SURFACE, PER SAE-AS478, METHOD 7A, OR OPTIONAL METHOD: LASER ETCH DRAWING PART NUMBER 140202MRA019 ON SPECIFIED SURFACE, PER SAE-AS478, METHOD 15B1. (SHALLOW ENGRAVE 0.0001-0.0006 DEEP). (ZONE B2).

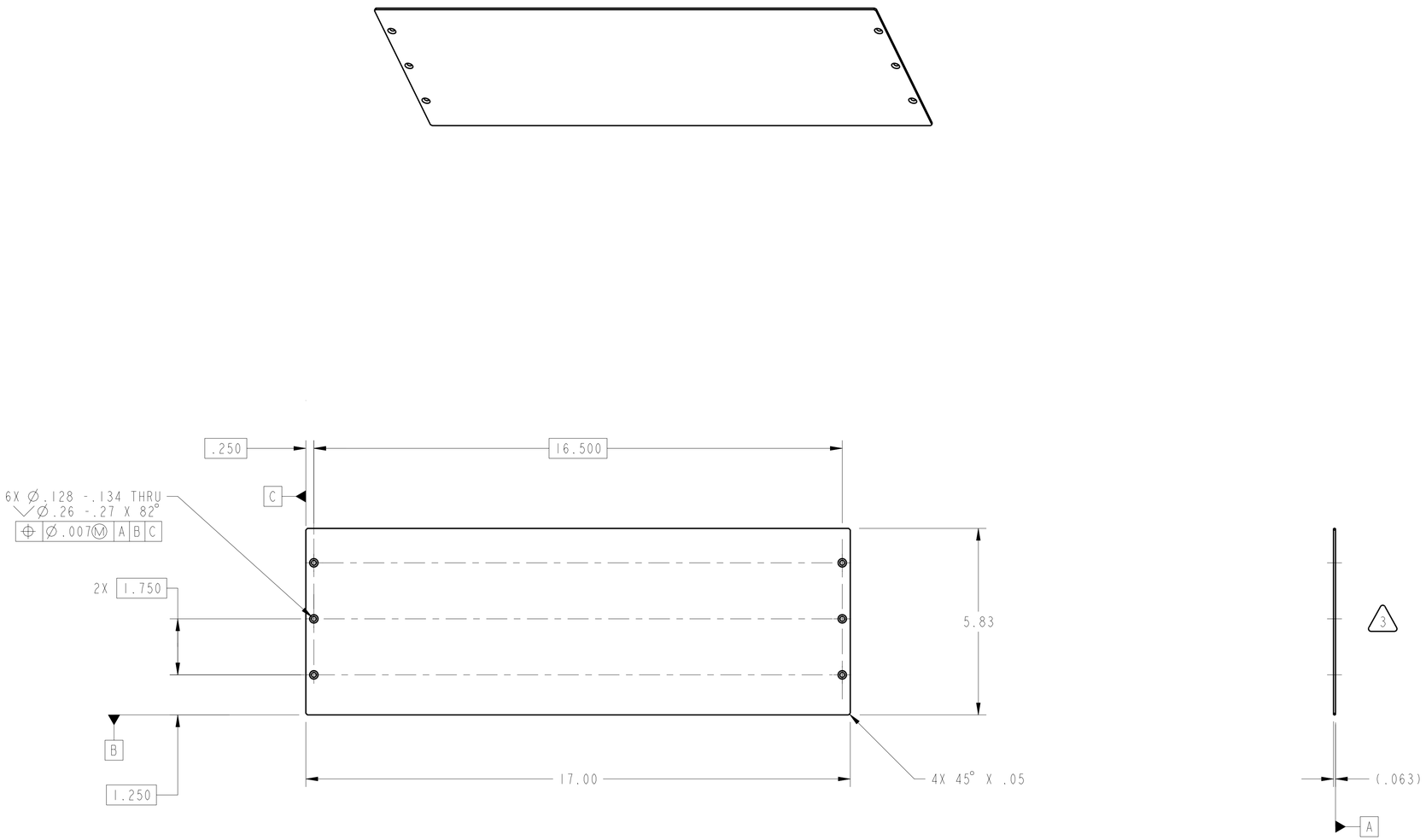

PRIOR TO USE VERIFY THE INTENDED PURPOSE IN PDM ("FOR" ATTRIBUTE)				REVISIONS	
UNLESS OTHERWISE SPECIFIED DIMENSIONS ARE IN INCHES		CONTRACT CONTRACTOR		NATIONAL AERONAUTICS AND SPACE ADMINISTRATION JOHN H. GLENN RESEARCH CENTER LEWIS FIELD CLEVELAND, OHIO	
TOLERANCE ON		TASK ORDER			
.X	± 0.03	DRAFTER	DEZ/CLAPPER	DISCHARGE MODULE CHASSIS	
.XX	± 0.01	ENGINEER	DES/TRIMARCHI		
.XXX	± 0.005	DESIGNER	DEZ/CLAPPER		140202MRA011
FRACTION	± -	DIMENSIONING AND TOLERANCING PER ASME Y14.5M-1994		A019 MODULE PLAIN SIDE COVER	
ANGULAR	± 0.50°				
BREAK EDGES	.01 - .02				
PDM REL LEVEL: **Released** PDM REVISION: -				SIZE D	DRAWING NUMBER 140202MRA019
PDM DATABASE: 140202_HP-120V_PPU				REV -	BLDG 301
MODEL NAME: 140202_PLAIN_SIDE_COVER				AREA -	UNITS: INCH
CHECK FOR ANY OUTSTANDING ECO'S PRIOR TO USE				SCALE: 1/2	INITIAL REL DATE 05/23/2014
				SHEET 1 OF 1	DISCIPLINE MECHANICAL

CHG	ZONE	DESCRIPTION	APP/DATE

PRO/E VERSION: Wildfire 5.0

SIZE D DRAWING NUMBER 140202MRA019 REV -

NAME:CREDDING OBJECT:140202_PLAIN_SIDE_COVER DATE:30-Mar-15 11:07:05

1. MATERIAL: 6061-T6 ALUMINUM.

2. DRAWING DEVELOPED FROM TECHNICIAN FABRICATED PART. ACTUAL FEATURE DIMENSIONAL TOLERANCE UNKNOWN.

3. IDENTIFY BY BAGGING TAGGING WITH DRAWING NUMBER 140202MRA022, PER SAE-AS478, METHOD 35.

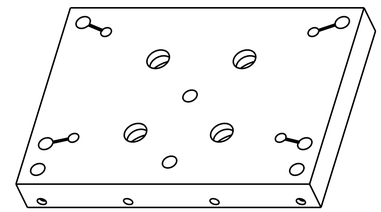

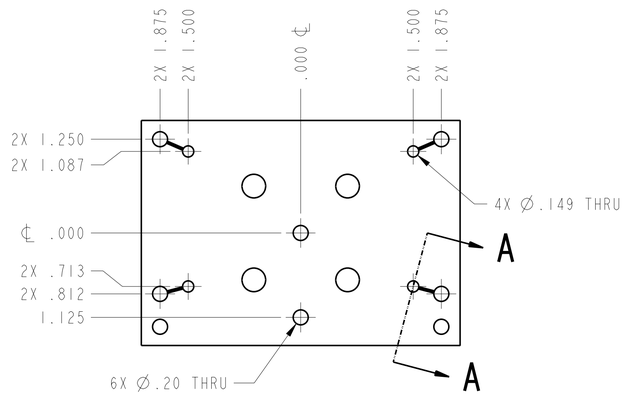

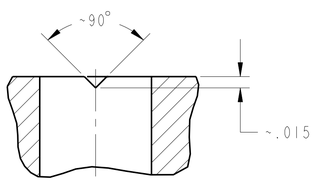

SECTION **A-A**
SCALE 10/1
HAND FINISHED SLOTS
4 PLACES

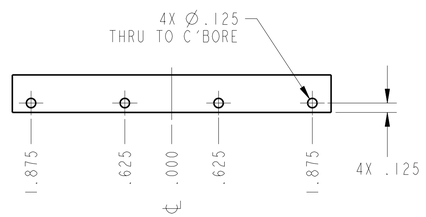

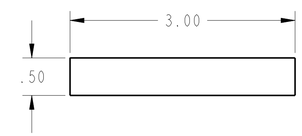

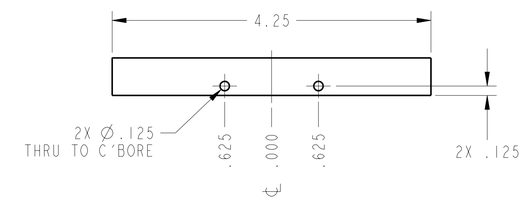

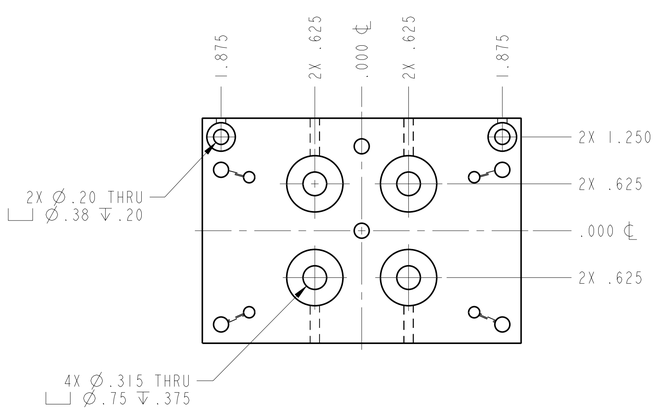

CHG	ZONE	DESCRIPTION	APP/DATE

REVISIONS

PRIOR TO USE VERIFY THE INTENDED PURPOSE IN PDM ("FOR" ATTRIBUTE)

UNLESS OTHERWISE SPECIFIED DIMENSIONS ARE IN INCHES

CONTRACT
CONTRACTOR

TOLERANCE ON		TASK ORDER	
.X	± 0.03	DRAFTER	LMP/C. REDDING
.XX	± 0.01	ENGINEER	LMP/TRIMARCHI
.XXX	± 0.005	DESIGNER	LMP/CLAPPER
FRACTION	± -	DIMENSIONING AND TOLERANCING PER ASME Y14.5M-1994	
ANGULAR	± 0.50°		
BREAK EDGES	.01-.03		

PDM REL LEVEL: **Released** PDM REVISION: -
PDM DATABASE: 140202_HP-120V_PPU
MODEL NAME: 140202MRA022_RECT-BRKT_BASE
CHECK FOR ANY OUTSTANDING ECO'S PRIOR TO USE

NATIONAL AERONAUTICS AND SPACE ADMINISTRATION
JOHN H. GLENN RESEARCH CENTER
LEWIS FIELD
CLEVELAND, OHIO

RECTIFIER BRACKET ASSEMBLY
140202MRA021

A022 RECTIFIER BASE

SIZE	DRAWING NUMBER	REV	BLDG	AREA
D	140202MRA022	-	301	-

UNITS: INCH

SCALE:	INITIAL REL DATE	SHEET	DISCIPLINE
1/1	04/17/2015	1 OF 1	MECHANICAL

PRO/E VERSION: Wildfire 5.0

SIZE D DRAWING NUMBER 140202MRA022 REV -

NAME:CREDDING OBJECT:140202MRA022_RECT-BRKT_BASE DATE:17-Apr-15 11:18:48

1. MATERIAL: 6061-T6 ALUMINUM.

2. DRAWING DEVELOPED FROM TECHNICIAN FABRICATED PART. ACTUAL FEATURE DIMENSIONAL TOLERANCE UNKNOWN.

3. IDENTIFY BY BAGGING TAGGING WITH DRAWING NUMBER 140202MRA023, PER SAE-AS478, METHOD 35.

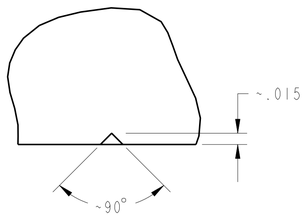

DETAIL A
SCALE 10/1
HAND FINISHED SLOT
2 PLACES

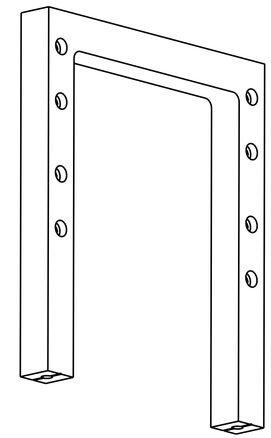

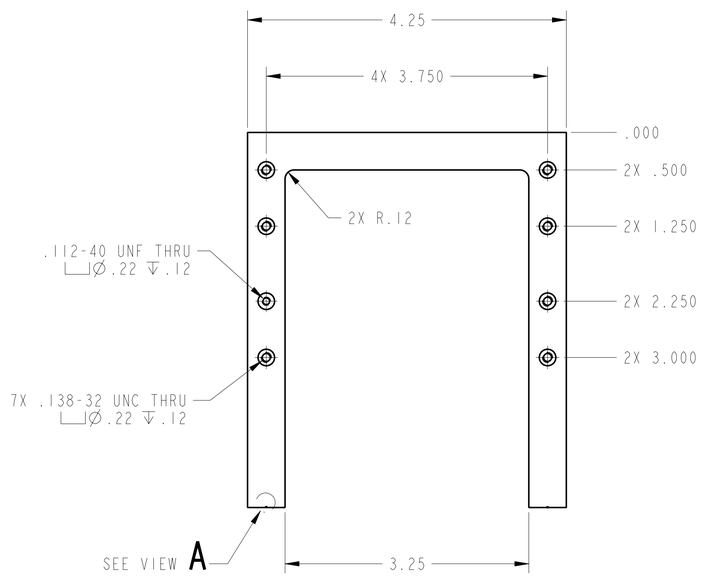

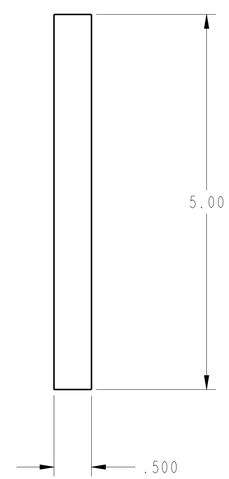

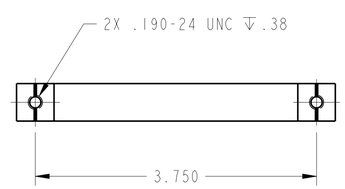

CHG	ZONE	DESCRIPTION	APP/DATE

REVISIONS

PRIOR TO USE VERIFY THE INTENDED PURPOSE IN PDM ("FOR" ATTRIBUTE)

UNLESS OTHERWISE SPECIFIED DIMENSIONS ARE IN INCHES		CONTRACT / CONTRACTOR	
TOLERANCE ON		TASK ORDER	
.X	± 0.05	DRAFTER	LMP/C. REDDING
.XX	± 0.01	ENGINEER	LEM/BIRCHENOUGH
.XXX	± 0.005	DESIGNER	LEM/BIRCHENOUGH
FRACTION	± -	DIMENSIONING AND TOLERANCING PER ASME Y14.5M-1994	
ANGULAR	± 0.50°		
BREAK EDGES	.01-.03		

NATIONAL AERONAUTICS AND SPACE ADMINISTRATION
JOHN H. GLENN RESEARCH CENTER
LEWIS FIELD
CLEVELAND, OHIO

RECTIFIER BRACKET ASSEMBLY

140202MRA021

A023 RECTIFIER HOOP

PDM REL LEVEL: Released PDM REVISION: -
PDM DATABASE: 140202_HP-120V_PPU
MODEL NAME: 140202MRA023_RECT-BRKT_HOOP
CHECK FOR ANY OUTSTANDING ECO'S PRIOR TO USE

SIZE	DRAWING NUMBER	REV	BLDG	AREA
D	140202MRA023	-	301	-
			UNITS: INCH	
SCALE: 1/1	INITIAL REL DATE 04/17/2015	SHEET 1 OF 1	DISCIPLINE MECHANICAL	

PRO/E VERSION: Wildfire 5.0

SIZE D DRAWING NUMBER 140202MRA023 REV -

NAME:CREDDING OBJECT:140202MRA023_RECT-BRKT_HOOP DATE:17-Apr-15 11:19:34

1. MATERIAL: MULTIPURPOSE 110 COPPER, .040" THICK.

2. DRAWING DEVELOPED FROM TECHNICIAN FABRICATED PART. ACTUAL FEATURE DIMENSIONAL TOLERANCE UNKNOWN.

3. IDENTIFY BY BAGGING TAGGING WITH DRAWING NUMBER 140202MRA024, PER SAE-AS478, METHOD 35.

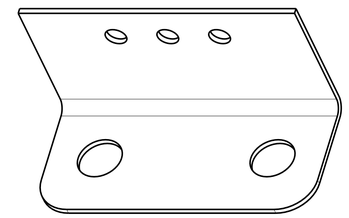

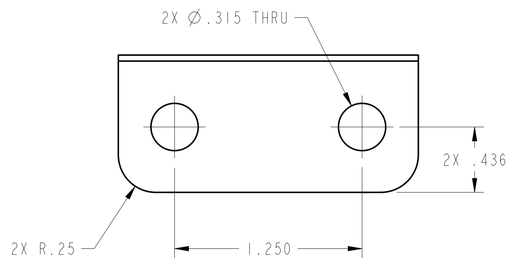

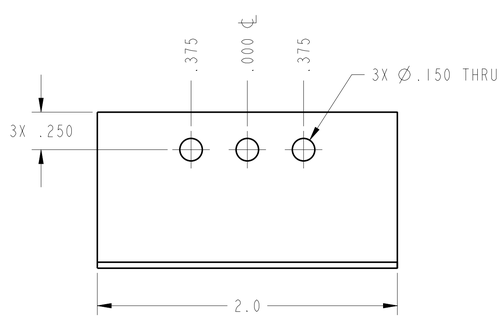

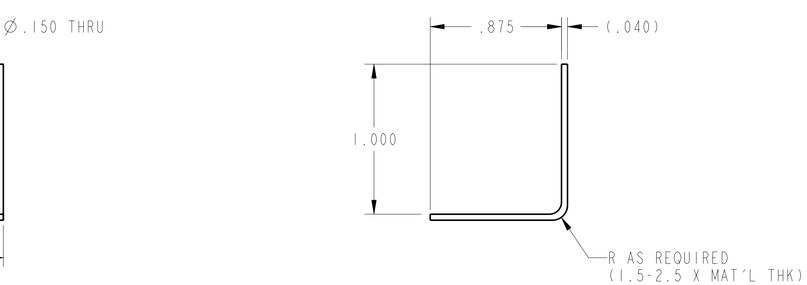

CHG	ZONE	DESCRIPTION	APP/DATE

REVISIONS

PRIOR TO USE VERIFY THE INTENDED PURPOSE IN PDM ("FOR" ATTRIBUTE)

UNLESS OTHERWISE SPECIFIED DIMENSIONS ARE IN INCHES

CONTRACT

CONTRACTOR

TOLERANCE ON		TASK ORDER	
.X	± 0.03	DRAFTER	LMP/C. REDDING
.XX	± 0.01	ENGINEER	LEM/BIRCHENOUGH
.XXX	± 0.005	DESIGNER	LEM/BIRCHENOUGH
FRACTION	± -	DIMENSIONING AND TOLERANCING PER ASME Y14.5M-1994	
ANGULAR	± 0.50°		
BREAK EDGES	-		

NATIONAL AERONAUTICS AND SPACE ADMINISTRATION
JOHN H. GLENN RESEARCH CENTER
LEWIS FIELD
CLEVELAND, OHIO

RECTIFIER ASSEMBLY

140202MRA020

A024 DUAL DIODE BRACKET

PDM REL LEVEL: Released PDM REVISION: -

PDM DATABASE: 140202_HP-120V_PPU

MODEL NAME: 140202MRA024_DUAL_DIODE_BRKT

CHECK FOR ANY OUTSTANDING ECO'S PRIOR TO USE

SIZE	DRAWING NUMBER	REV	BLDG	AREA
D	140202MRA024	-	301	-
			UNITS: INCH	
SCALE: 2/1	INITIAL REL DATE 04/17/2015	SHEET 1 OF 1	DISCIPLINE MECHANICAL	

PRO/E VERSION: Wildfire 5.0

SIZE D DRAWING NUMBER 140202MRA024 REV -

NAME:CREDDING OBJECT:140202MRA024_DUAL_DIODE_BRKT DATE:17-Apr-15 11:21:00

1. MATERIAL: 6061-T6 ALUMINUM ANGLE, 2 X 2 X 1/8" THICK.

2. DRAWING DEVELOPED FROM TECHNICIAN FABRICATED PART. ACTUAL FEATURE DIMENSIONAL TOLERANCE UNKNOWN.

3. IDENTIFY BY BAGGING TAGGING WITH DRAWING NUMBER 140202MRA025, PER SAE-AS478, METHOD 35.

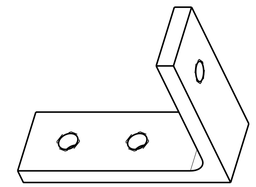

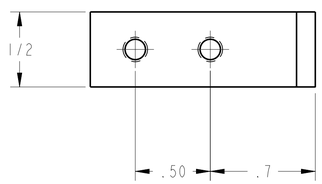

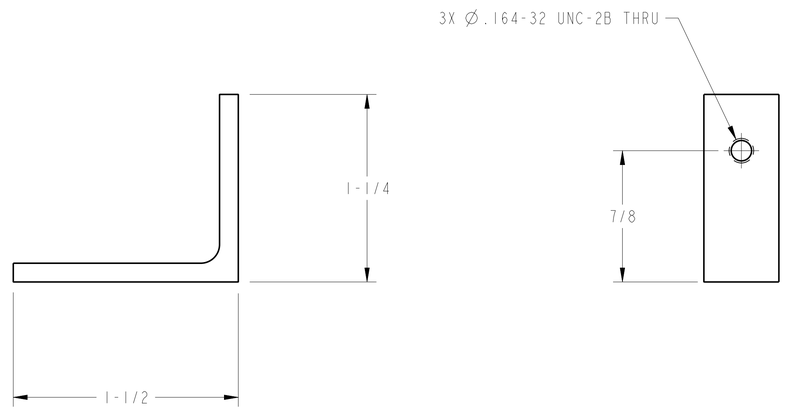

CHG	ZONE	DESCRIPTION	APP/DATE

REVISIONS

PRIOR TO USE VERIFY THE INTENDED PURPOSE IN PDM ("FOR" ATTRIBUTE)

UNLESS OTHERWISE SPECIFIED DIMENSIONS ARE IN INCHES

CONTRACT

CONTRACTOR

TOLERANCE ON		TASK ORDER	
.X	± 0.03	DRAFTER	LMP/C. REDDING
.XX	± 0.01	ENGINEER	LEM/BIRCHENOUGH
.XXX	± 0.005	DESIGNER	LEM/BIRCHENOUGH
FRACTION	± -	DIMENSIONING AND TOLERANCING PER ASME Y14.5M-1994	
ANGULAR	± 0.50°		
BREAK EDGES	-		

NATIONAL AERONAUTICS AND SPACE ADMINISTRATION
JOHN H. GLENN RESEARCH CENTER
LEWIS FIELD
CLEVELAND, OHIO

DISCHARGE MODULE

140202MRA010

A025 TERMINAL STRIP BRACKET

PDM REL LEVEL: Released PDM REVISION: -

PDM DATABASE: 140202_HP-120V_PPU

MODEL NAME: 140202MRA025_TERM-STRIP_BRKT

CHECK FOR ANY OUTSTANDING ECO'S PRIOR TO USE

SIZE	DRAWING NUMBER	REV	BLDG	AREA
D	140202MRA025	-	301	-

UNITS: INCH

SCALE:	INITIAL REL DATE	SHEET	DISCIPLINE
2/1	04/17/2015	1 OF 1	MECHANICAL

PRO/E VERSION: Wildfire 5.0

SIZE D DRAWING NUMBER 140202MRA025 REV -

NAME:CREDDING OBJECT:140202MRA025_TERM-STRIP_BRKT DATE:17-Apr-15 11:21:51

1. MATERIAL: 6061-T6 ALUMINUM.

2. DRAWING DEVELOPED FROM TECHNICIAN FABRICATED PART. ACTUAL FEATURE DIMENSIONAL TOLERANCE UNKNOWN.

3. IDENTIFY BY BAGGING TAGGING WITH DRAWING NUMBER 140202MRA027, PER SAE-AS478, METHOD 35.

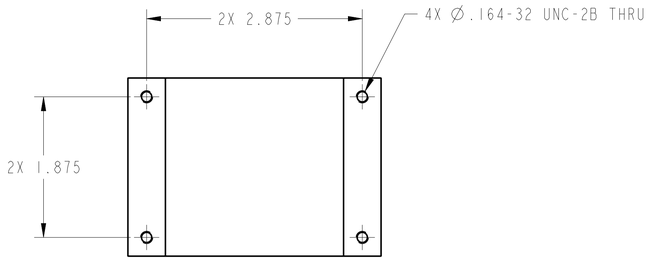

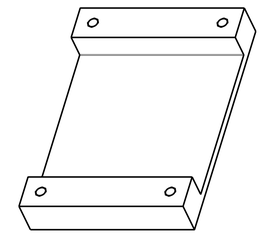

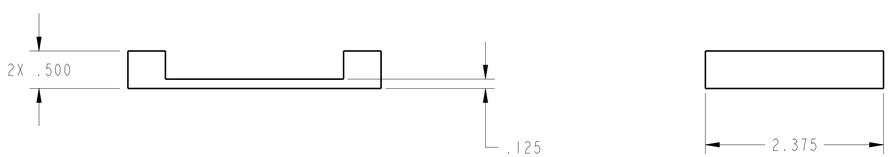

CHG	ZONE	DESCRIPTION	APP/DATE

REVISIONS

PRIOR TO USE VERIFY THE INTENDED PURPOSE IN PDM ("FOR" ATTRIBUTE)

UNLESS OTHERWISE SPECIFIED DIMENSIONS ARE IN INCHES

CONTRACT

CONTRACTOR

TOLERANCE ON		TASK ORDER	
.X	± 0.05	DRAFTER	LMP/C. REDDING
.XX	± 0.01	ENGINEER	LEM/BIRCHENOUGH
.XXX	± 0.005	DESIGNER	LEM/BIRCHENOUGH
FRACTION	± -	DIMENSIONING AND TOLERANCING PER ASME Y14.5M-1994	
ANGULAR	± 0.50°		
BREAK EDGES	-		

NATIONAL AERONAUTICS AND SPACE ADMINISTRATION
JOHN H. GLENN RESEARCH CENTER
LEWIS FIELD
CLEVELAND, OHIO

OUTPUT INDUCTOR ASSEMBLY

140202MRA026

A027 OUTPUT INDUCTOR MOUNT

PDM REL LEVEL: Released PDM REVISION: -

PDM DATABASE: 140202_HP-120V_PPU

MODEL NAME: 140202MRA027_OUT-IND_MOUNT

CHECK FOR ANY OUTSTANDING ECO'S PRIOR TO USE

SIZE	DRAWING NUMBER	REV	BLDG	AREA
D	140202MRA027	-	301	-

UNITS: INCH

SCALE:	INITIAL REL DATE	SHEET	DISCIPLINE
1/1	04/17/2015	1 OF 1	MECHANICAL

PRO/E VERSION: Wildfire 5.0

SIZE D DRAWING NUMBER 140202MRA027 REV -

NAME:CREDDING OBJECT:140202MRA027_OUT-IND_MOUNT DATE:17-Apr-15 11:23:52

1. MATERIAL: 6061-T6 ALUMINUM.

2. DRAWING DEVELOPED FROM TECHNICIAN FABRICATED PART. ACTUAL FEATURE DIMENSIONAL TOLERANCE UNKNOWN.

3. IDENTIFY BY BAGGING TAGGING WITH DRAWING NUMBER 140202MRA031, PER SAE-AS478, METHOD 35.

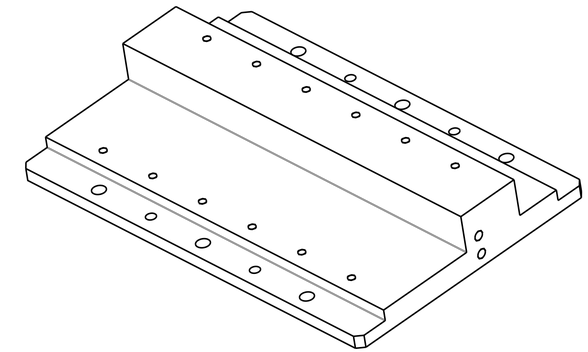

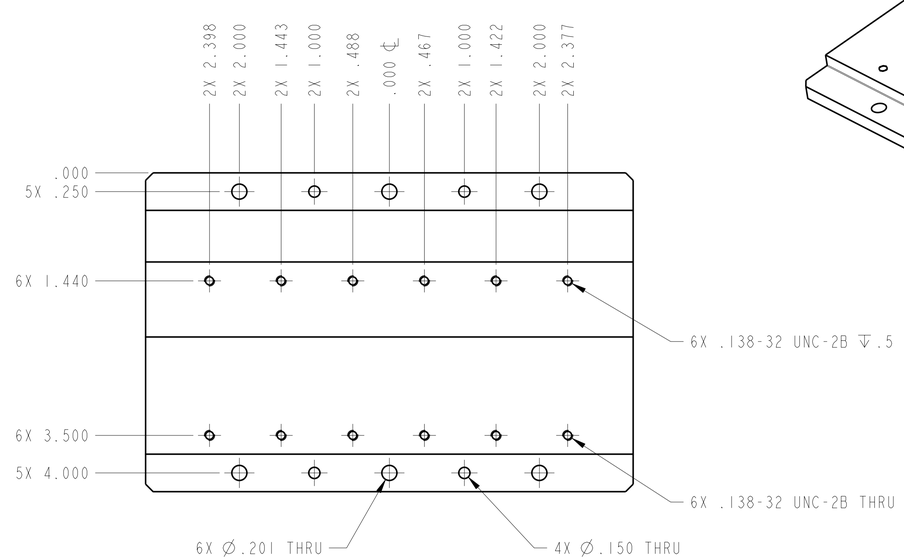

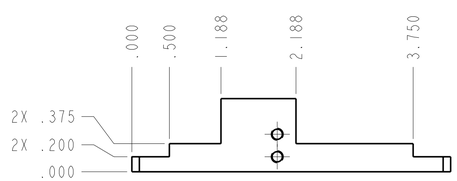

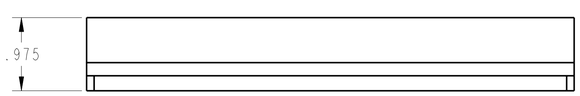

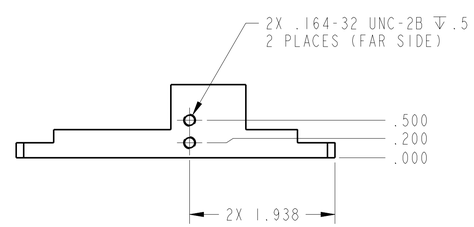

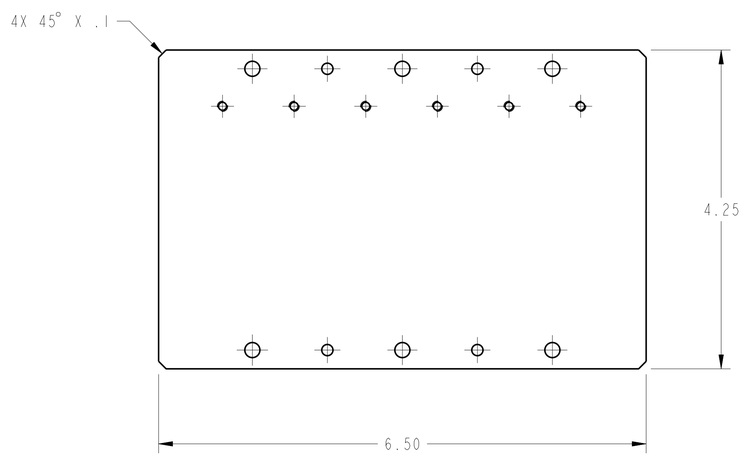

PRIOR TO USE VERIFY THE INTENDED PURPOSE IN PDM ("FOR" ATTRIBUTE)

UNLESS OTHERWISE SPECIFIED DIMENSIONS ARE IN INCHES

CONTRACT

CONTRACTOR

TOLERANCE ON		TASK ORDER	
.X	± 0.03	DRAFTER	LMP/CLAPPER
.XX	± 0.01	ENGINEER	LEM/BIRCHENOUGH
.XXX	± 0.005	DESIGNER	LEM/BIRCHENOUGH
FRACTION	± -	DIMENSIONING AND TOLERANCING PER ASME Y14.5M-1994	
ANGULAR	± 0.50°		
BREAK EDGES	.01-.03		

PDM REL LEVEL: Released PDM REVISION: -

PDM DATABASE: 140202_HP-120V_PPU

MODEL NAME: 140202MRA031_INVRTR_BRKT_BASE

CHECK FOR ANY OUTSTANDING ECO'S PRIOR TO USE

CHG	ZONE	DESCRIPTION	APP/DATE

REVISIONS

NATIONAL AERONAUTICS AND SPACE ADMINISTRATION
JOHN H. GLENN RESEARCH CENTER
LEWIS FIELD
CLEVELAND, OHIO

INVERTER BRACKET ASSEMBLY

140202MRA030

A031 INVERTER BRACKET BASE

SIZE	DRAWING NUMBER	REV	BLDG	AREA
D	140202MRA031	-	301	-
			UNITS: INCH	
SCALE: 1/1	INITIAL REL DATE 04/17/2015	SHEET 1 OF 1	DISCIPLINE MECHANICAL	

PRO/E VERSION: Wildfire 5.0

SIZE D DRAWING NO NUMBER 140202MRA031 REV -

NAME:CREDDING OBJECT:140202MRA031_INVRTR_BRKT_BASE DATE:17-Apr-15 11:28:33

1. MATERIAL: 6061-T6 ALUMINUM.

2. DRAWING DEVELOPED FROM TECHNICIAN FABRICATED PART. ACTUAL FEATURE DIMENSIONAL TOLERANCE UNKNOWN.

3. IDENTIFY BY BAGGING TAGGING WITH DRAWING NUMBER 140202MRA032, PER SAE-AS478, METHOD 35.

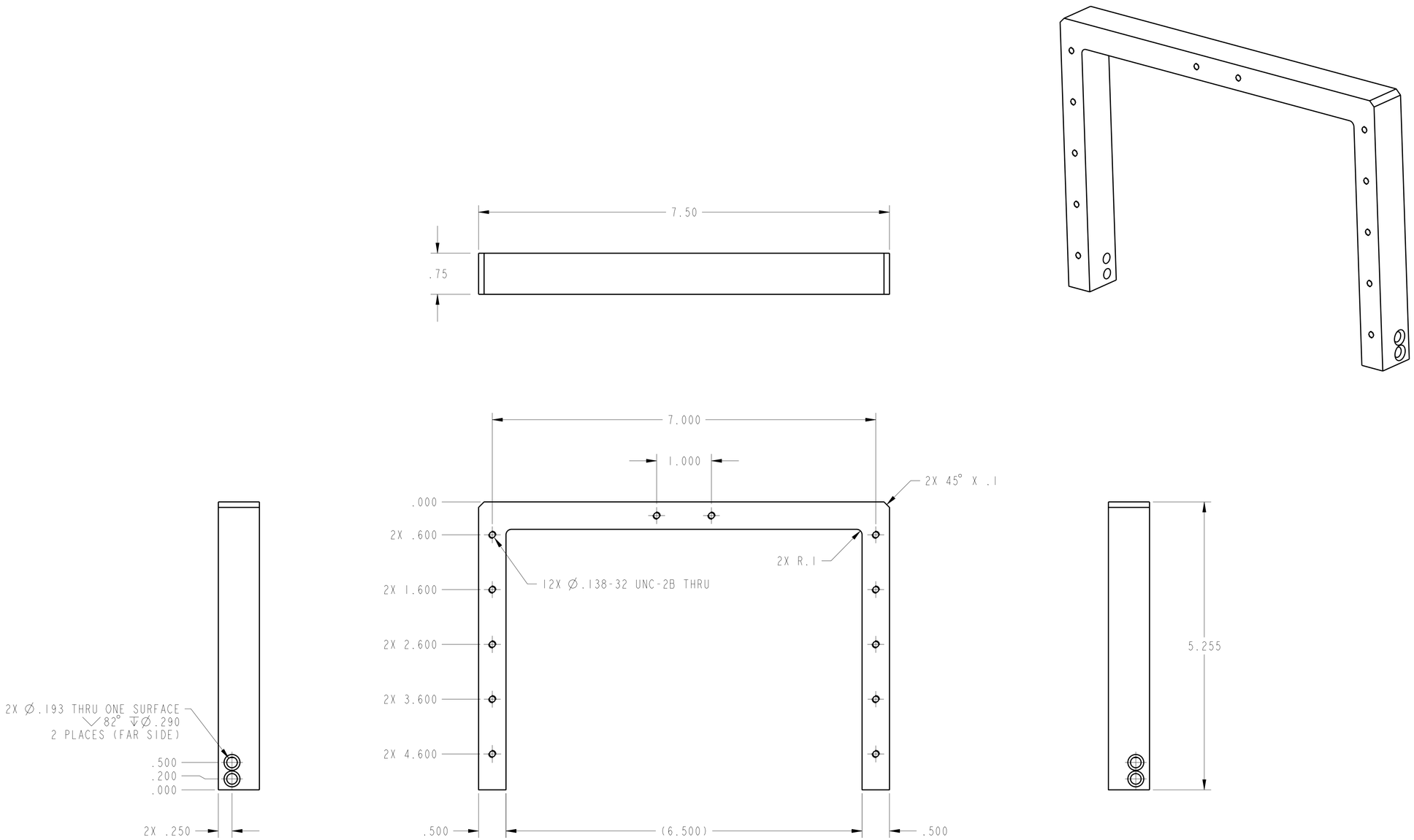

CHG	ZONE	DESCRIPTION	APP/DATE

REVISIONS

PRIOR TO USE VERIFY THE INTENDED PURPOSE IN PDM ("FOR" ATTRIBUTE)

UNLESS OTHERWISE SPECIFIED DIMENSIONS ARE IN INCHES

CONTRACT

CONTRACTOR

TOLERANCE ON		TASK ORDER	
.X	± 0.03	DRAFTER	LMP/C. REDDING
.XX	± 0.01	ENGINEER	LEM/BIRCHENOUGH
.XXX	± 0.005	DESIGNER	LEM/BIRCHENOUGH
FRACTION	± -	DIMENSIONING AND TOLERANCING PER ASME Y14.5M-1994	
ANGULAR	± 0.50°		
BREAK EDGES	.01-.03		

PDM REL LEVEL: **Released** PDM REVISION: -

PDM DATABASE: 140202_HP-120V_PPU

MODEL NAME: 140202MRA032_INVRTR_BRKT_UPRT

CHECK FOR ANY OUTSTANDING ECO'S PRIOR TO USE

NATIONAL AERONAUTICS AND SPACE ADMINISTRATION
JOHN H. GLENN RESEARCH CENTER
LEWIS FIELD
CLEVELAND, OHIO

INVERTER BRACKET ASSEMBLY

140202MRA030

A032 INVERTER BRACKET HOOP

SIZE	DRAWING NUMBER	REV	BLDG	AREA
D	140202MRA032	-	301	-
			UNITS: INCH	
SCALE: 1/1	INITIAL REL DATE 04/17/2015	SHEET 1 OF 1	DISCIPLINE MECHANICAL	

PRO/E VERSION: Wildfire 5.0

SIZE D DRAWING NUMBER 140202MRA032 REV -

NAME:CREDDING OBJECT:140202MRA032_INVRTR_BRKT_UPRT DATE:17-Apr-15 11:29:20

1. MATERIAL: FABRICATE FROM .164-32 UNC-3A X .875 LONG HEX SOCKET FLAT HEAD SCREW, STAINLESS STEEL, USE MCMASTER-CARR PART NUMBER 92210A198 OR EQUIVALENT.

2. REMOVE EXCESS MATERIAL FROM SCREW HEAD AS SHOWN.

3. DRAWING DEVELOPED FROM TECHNICIAN FABRICATED PART. ACTUAL FEATURE DIMENSIONAL TOLERANCE UNKNOWN.

4. IDENTIFY BY BAGGING TAGGING WITH DRAWING NUMBER 140202MRA033, PER SAE-AS478, METHOD 35.

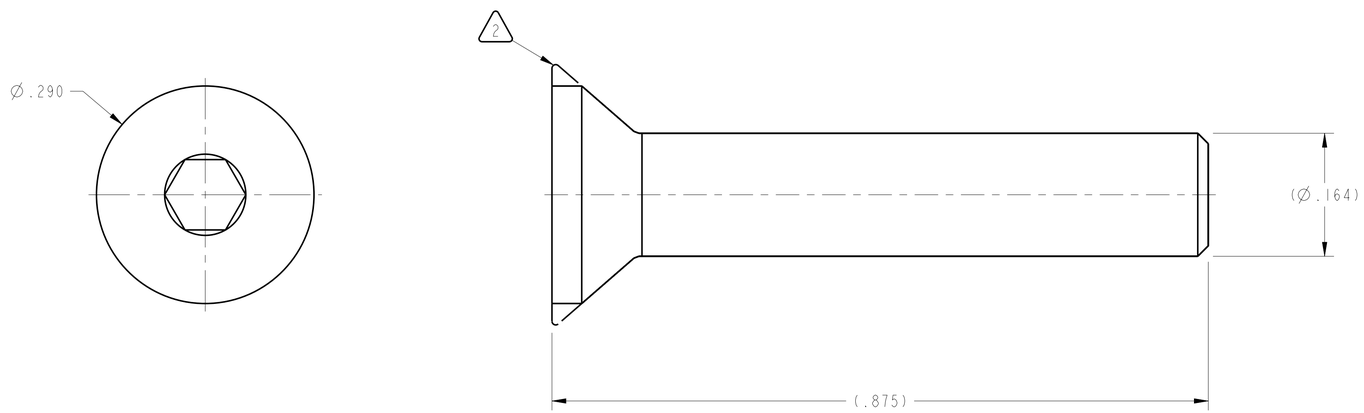

CHG	ZONE	DESCRIPTION	APP/DATE

REVISIONS

PRIOR TO USE VERIFY THE INTENDED PURPOSE IN PDM ("FOR" ATTRIBUTE)

UNLESS OTHERWISE SPECIFIED DIMENSIONS ARE IN INCHES

CONTRACT

CONTRACTOR

TOLERANCE ON		TASK ORDER	
.X	± 0.03	DRAFTER	LMP/C. REDDING
.XX	± 0.01	ENGINEER	LEM/BIRCHENOUGH
.XXX	± 0.005	DESIGNER	LEM/BIRCHENOUGH
FRACTION	± -		
ANGULAR	± 0.50°		
BREAK EDGES	.01-.03		

DIMENSIONING AND TOLERANCING PER ASME Y14.5M-1994

NATIONAL AERONAUTICS AND SPACE ADMINISTRATION
JOHN H. GLENN RESEARCH CENTER
LEWIS FIELD
CLEVELAND, OHIO

INVERTER BRACKET ASSEMBLY

140202MRA030

A033 BRACKET FASTENER ALTERATION

PDM REL LEVEL: Released PDM REVISION: -

PDM DATABASE: 140202_HP-120V_PPU

MODEL NAME: 140202MRA033_164X0875_FHS_ALT

CHECK FOR ANY OUTSTANDING ECO'S PRIOR TO USE

SIZE	DRAWING NUMBER	REV	BLDG	AREA
D	140202MRA033	-	301	-

UNITS: INCH

SCALE:	INITIAL REL DATE	SHEET	DISCIPLINE
10/1	04/17/2015	1 OF 1	MECHANICAL

PRO/E VERSION: Wildfire 5.0

SIZE D DRAWING NUMBER 140202MRA033 REV -

NAME:CREDDING OBJECT:140202MRA033_164X0875_FHS_ALT DATE:17-Apr-15 11:30:09

1. MATERIAL: 6061-T6 ALUMINUM.

2. DRAWING DEVELOPED FROM TECHNICIAN FABRICATED PART. ACTUAL FEATURE DIMENSIONAL TOLERANCE UNKNOWN.

3. IDENTIFY BY BAGGING TAGGING WITH DRAWING NUMBER 140202MRA041, PER SAE-AS478, METHOD 35.

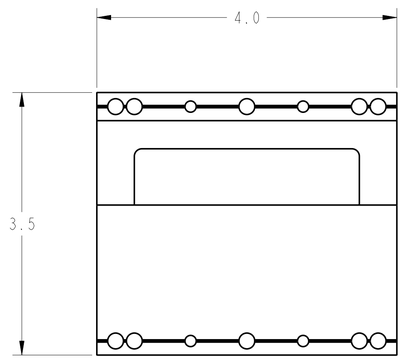

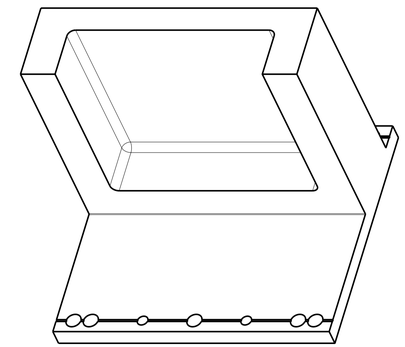

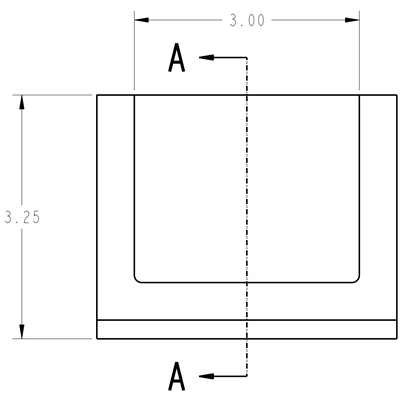

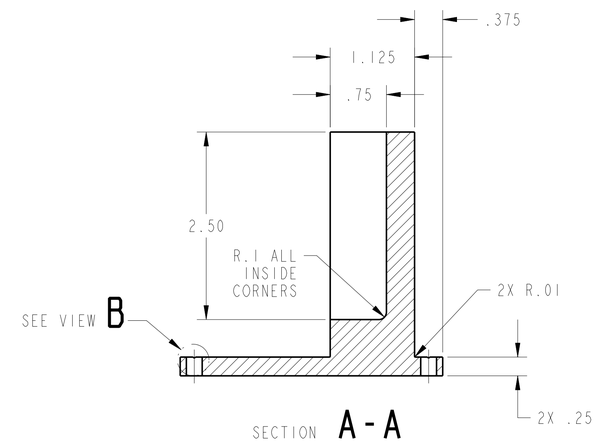

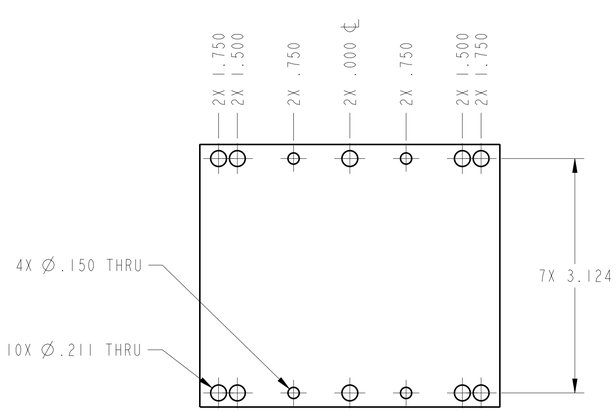

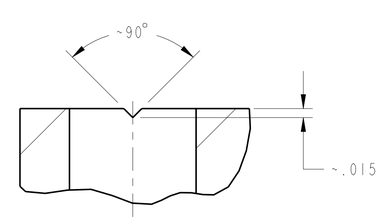

DETAIL B
SCALE 8/1
HAND FINISHED SLOT
2 PLACES

CHG	ZONE	DESCRIPTION	APP/DATE

REVISIONS

PRIOR TO USE VERIFY THE INTENDED PURPOSE IN PDM ("FOR" ATTRIBUTE)

UNLESS OTHERWISE SPECIFIED DIMENSIONS ARE IN INCHES

CONTRACT

CONTRACTOR

TOLERANCE ON		TASK ORDER	
.X	± 0.03	DRAFTER	LMP/C. REDDING
.XX	± 0.01	ENGINEER	LEM/BIRCHENOUGH
.XXX	± 0.005	DESIGNER	LEM/BIRCHENOUGH
FRACTION	± -	DIMENSIONING AND TOLERANCING PER ASME Y14.5M-1994	
ANGULAR	± -		
BREAK EDGES	.01-.03		

NATIONAL AERONAUTICS AND SPACE ADMINISTRATION
JOHN H. GLENN RESEARCH CENTER
LEWIS FIELD
CLEVELAND, OHIO

POWER TRANSFORMER ASSEMBLY

140202MRA040

A041 POWER TRANSFORMER MOUNT

PDM REL LEVEL: Released PDM REVISION: -

PDM DATABASE: 140202_HP-120V_PPU

MODEL NAME: 140202MRA041_DISCH-TRANS_MOUNT

CHECK FOR ANY OUTSTANDING ECO'S PRIOR TO USE

SIZE	DRAWING NUMBER	REV	BLDG	AREA
D	140202MRA041	-	301	-
			UNITS: INCH	
SCALE: 1/1	INITIAL REL DATE 04/17/2015	SHEET 1 OF 1	DISCIPLINE MECHANICAL	

PRO/E VERSION: Wildfire 5.0

SIZE D DRAWING NUMBER 140202MRA041 REV -

NAME:CREDDING OBJECT:140202MRA041_DISCH-TRANS_MOUNT DATE:17-Apr-15 11:32:46

1. MATERIAL: 3/8" THICK, 6061-T6 ALUMINUM, TOOLING PLATE.

2. 125 Ra ALL MACHINED SURFACES.

3. ELECTROCHEMICAL ETCH DRAWING PART NUMBER 140202MRA052 ON SPECIFIED SURFACE, PER SAE-AS478, METHOD 7A, OR OPTIONAL METHOD: LASER ETCH DRAWING PART NUMBER 140202MRA052 ON SPECIFIED SURFACE, PER SAE-AS478, METHOD 15B1. (SHALLOW ENGRAVE 0.0001-0.0006 DEEP). (ZONE G5).

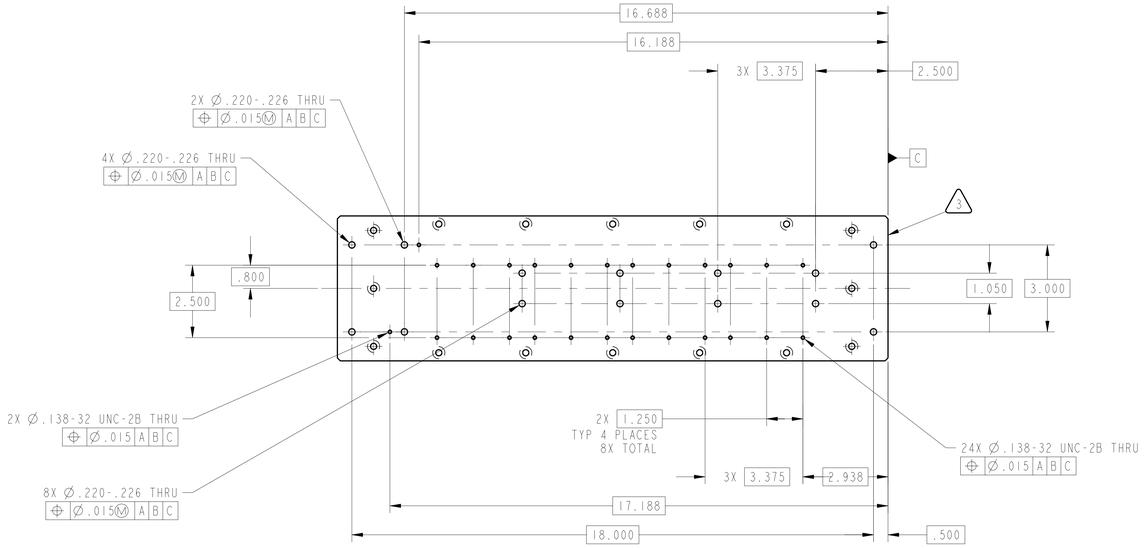

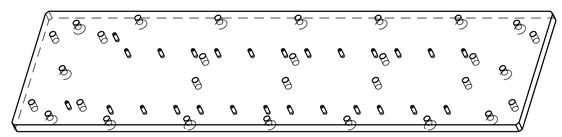

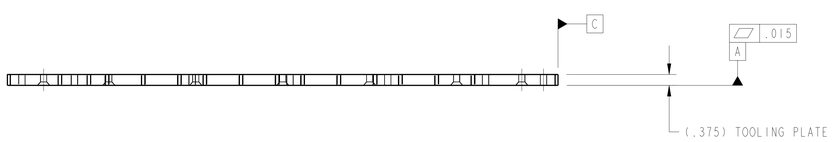

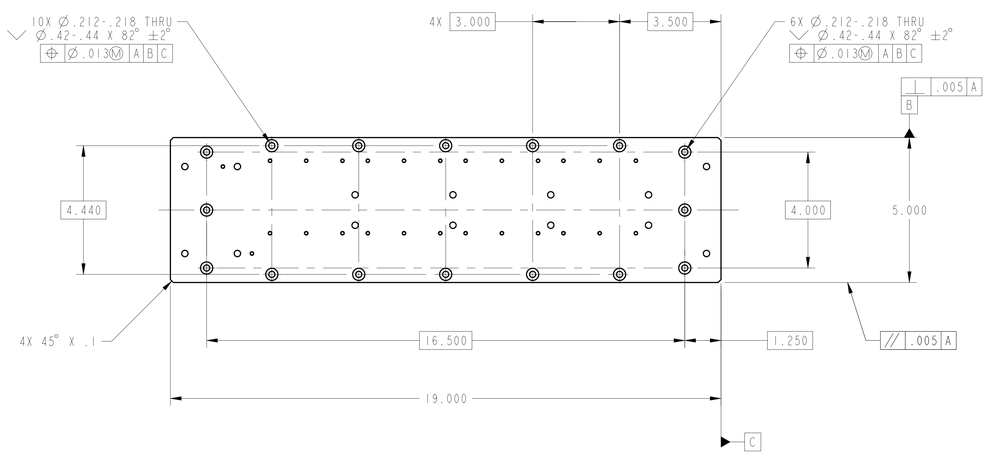

CHG	ZONE	DESCRIPTION	APP/DATE
B	H6	ADDED 16.688 BASIC DIM	RSC 06/12/14
A	H6	ADDED 16.188 BASIC DIM	RSC 06/10/14
		3X WAS 2X	
	G7	2X Ø.220-.226 THRU WITH FEATURE CONTROL FRAME WAS Ø.220 DIM	
	G8	4X WAS 22X	
	G7	ADDED .800 BASIC DIM	
		ADDED 2.500 BASIC DIM	
	F8	2X Ø.138-32 UNC-2B THRU WITH FEATURE CONTROL FRAME WAS Ø.138 DIM	
		8X Ø.220-.226 THRU WITH FEATURE CONTROL FRAME WAS Ø.220 DIM	
	F6	ADDED 17.188 BASIC DIM	
		2X 1.250 BASIC DIM, TYP 4 PLACES, 8X TOTAL WAS 1.250 BASIC DIM	
		ADDED 3X 3.375 BASIC DIM	
	F5	24X Ø.138-32 UNC-2B THRU WITH FEATURE CONTROL FRAME WAS Ø.138 DIM	
	C7	10X Ø.212-.218 THRU ∨ Ø.42-.44 X 82° ±2° WITH FEATURE CONTROL FRAME WAS Ø.212 DIM	
	C6	ADDED 4X 3.000 BASIC DIM	
	C5	ADDED 3.500 BASIC DIM	
	B7	ADDED 4.440 BASIC DIM	
	A1	INPUT/OUTPUT CHASSIS ASSEMBLY WAS DISCHARGE MODULE CHASSIS	
		INPUT/OUTPUT BASEPLATE WAS DISCHARGE MODULE BASEPLATE	

REVISIONS

PRIOR TO USE VERIFY THE INTENDED PURPOSE IN PDM ("FOR" ATTRIBUTE)

UNLESS OTHERWISE SPECIFIED DIMENSIONS ARE IN INCHES

TOLERANCE ON	
.X	± 0.03
.XX	± 0.01
.XXX	± 0.005
FRACTION	± -
ANGULAR	± 0.50°
BREAK EDGES	.01-.02

CONTRACT
CONTRACTOR
TASK ORDER
DRAFTER DEZ/CLAPPER
ENGINEER DES/TRIMARCHI
DESIGNER DEZ/CLAPPER

DIMENSIONING AND TOLERANCING PER ASME Y14.5M-1994

PDM REL LEVEL: **Released** PDM REVISION: **B**
PDM DATABASE: 140202_HP-120V_PPU
MODEL NAME: 140202_INP-OUT_MOD_BASEPLATE
CHECK FOR ANY OUTSTANDING ECO'S PRIOR TO USE

NATIONAL AERONAUTICS AND SPACE ADMINISTRATION
JOHN H. GLENN RESEARCH CENTER
LEWIS FIELD
CLEVELAND, OHIO

INPUT/OUTPUT CHASSIS ASSEMBLY
140202MRA051

A052 INPUT/OUTPUT BASEPLATE

SIZE	DRAWING NUMBER	REV	BLDG	AREA
E	140202MRA052	B	301	-
			UNITS: INCH	

SCALE:	INITIAL REL DATE	SHEET	DISCIPLINE
1/2	04/25/2014	1 OF 1	MECHANICAL

PRO/E VERSION: Wildfire 5.0

SIZE E DRAWING NUMBER 140202MRA052 REV B

NAME:DREDWG OBJECT:140202_INP-OUT_MOD_BASEPLATE DATE:30-Mar-14 9:41:52

1. MATERIAL: 6061-T6 ALUMINUM, TOOLING PLATE, .375 THICK.

2. 63 Ra ALL MACHINED SURFACES.

3. ELECTROCHEMICAL ETCH DRAWING PART NUMBER 140202MRA053 ON SPECIFIED SURFACE, PER SAE-AS478, METHOD 7A, OR OPTIONAL METHOD: LASER ETCH DRAWING PART NUMBER 140202MRA053 ON SPECIFIED SURFACE, PER SAE-AS478, METHOD 15B1. (SHALLOW ENGRAVE 0.0001-0.0006 DEEP). (ZONE F4).

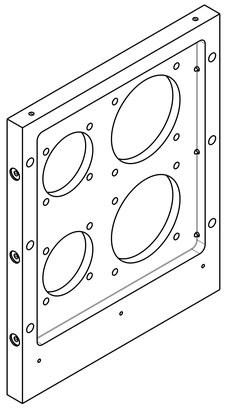

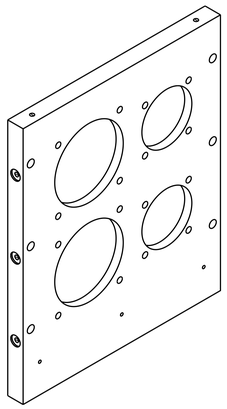

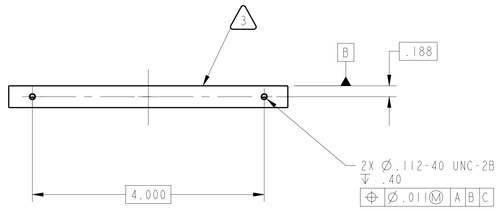

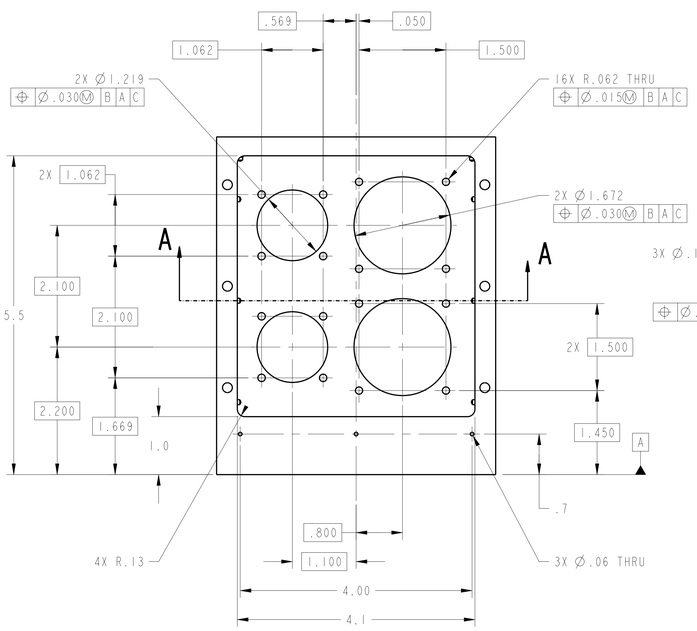

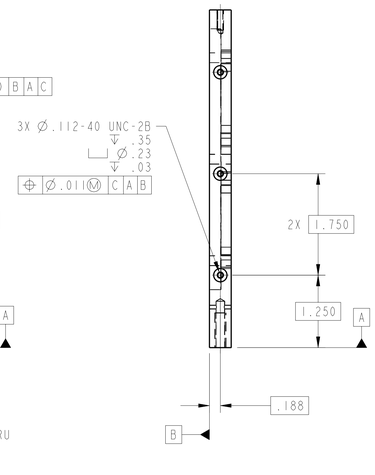

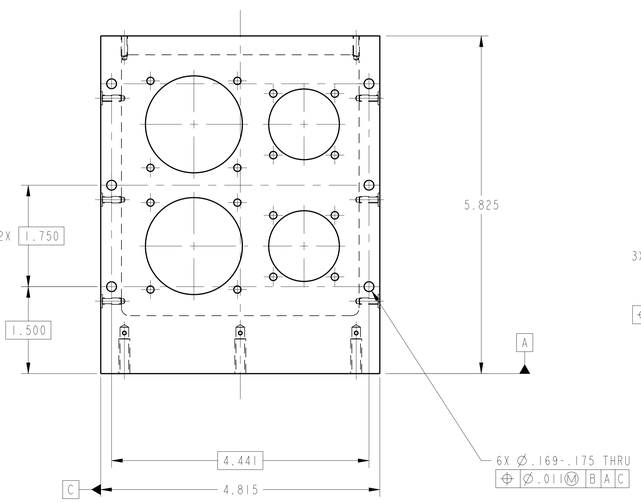

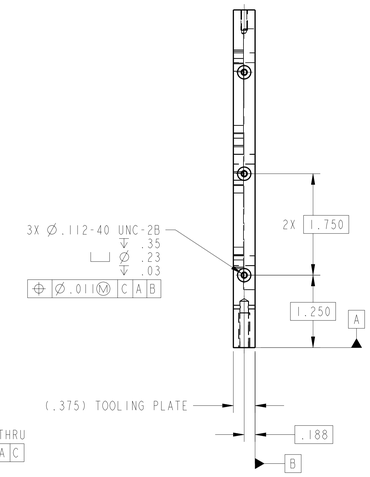

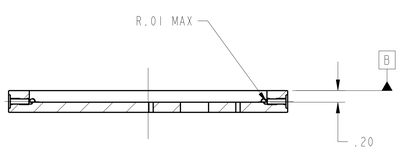

SECTION A-A

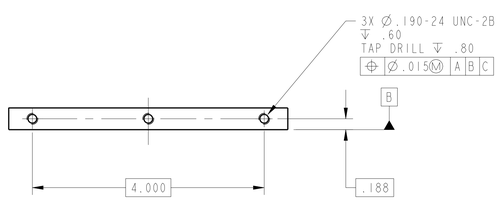

CHG	ZONE	DESCRIPTION	APP/DATE

REVISIONS

PRIOR TO USE VERIFY THE INTENDED PURPOSE IN PDM ("FOR" ATTRIBUTE)

UNLESS OTHERWISE SPECIFIED DIMENSIONS ARE IN INCHES

TOLERANCE ON	
X	± 0.03
.XX	± 0.01
.XXX	± 0.005
FRACTION	± -
ANGULAR	± 0.50°
BREAK EDGES	.01-.02

CONTRACT

CONTRACTOR

TASK ORDER	
DRAFTER	DEZ/CLAPPER
ENGINEER	DES/TRIMARCHI
DESIGNER	DEZ/CLAPPER

DIMENSIONING AND TOLERANCING PER ASME Y14.5M-1994

NATIONAL AERONAUTICS AND SPACE ADMINISTRATION
JOHN H. GLENN RESEARCH CENTER
LEWIS FIELD
CLEVELAND, OHIO

INPUT/OUTPUT MODULE CHASSIS

140202MRA051

A053 I/O MODULE FRONT PLATE

PDM REL LEVEL: Released PDM REVISION: -

PDM DATABASE: 140202_HP-120V_PPU

MODEL NAME: 140202_INP-OUT_MOD_ENDPLT_FRONT

CHECK FOR ANY OUTSTANDING ECO'S PRIOR TO USE

SIZE	DRAWING NUMBER	REV	BLDG	AREA
E	140202MRA053	-	301	-
			UNITS:	INCH

SCALE:	INITIAL REL DATE	SHEET	DISCIPLINE
1/1	04/25/2014	1 OF 1	MECHANICAL

PRO/E VERSION: Wildfire 5.0

SIZE E DRAWING NUMBER 140202MRA053 REV -

A

NAME:GREGSONG OBJECT:140202_INP-OUT_MOD_ENDPLT_FRONT DATE:30-Jan-15 15:43:58

1. MATERIAL: 6061-T6 ALUMINUM, TOOLING PLATE, .375 THICK.

2. 63 Ra ALL MACHINED SURFACES.

3. ELECTROCHEMICAL ETCH DRAWING PART NUMBER 140202MRA054 ON SPECIFIED SURFACE, PER SAE-AS478, METHOD 7A, OR OPTIONAL METHOD: LASER ETCH DRAWING PART NUMBER 140202MRA054 ON SPECIFIED SURFACE, PER SAE-AS478, METHOD 15B1. (SHALLOW ENGRAVE 0.0001-0.0006 DEEP). (ZONE D5).

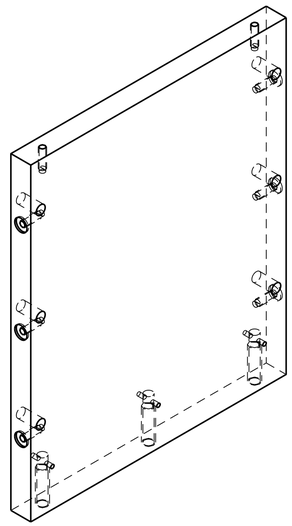

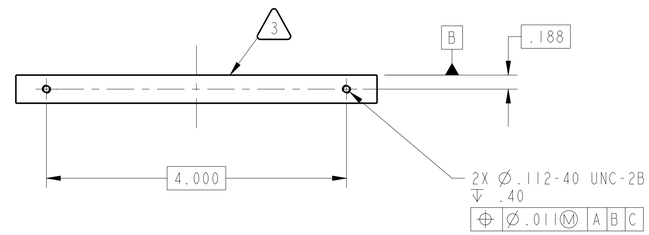

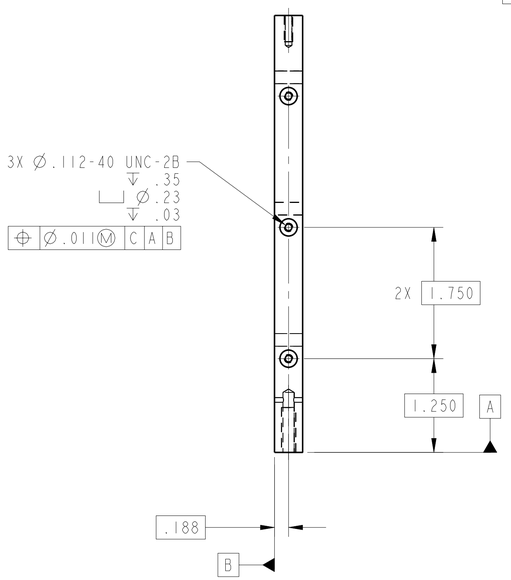

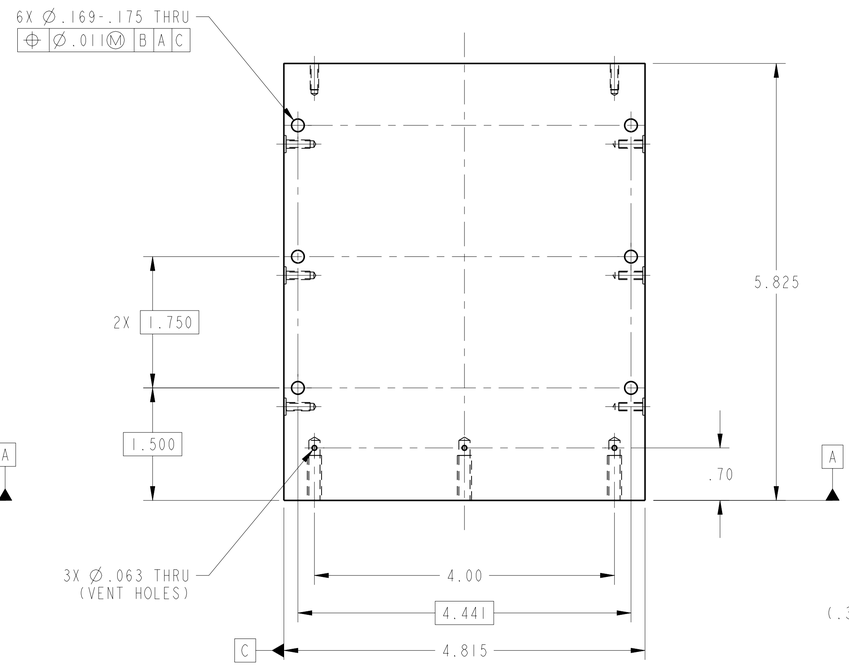

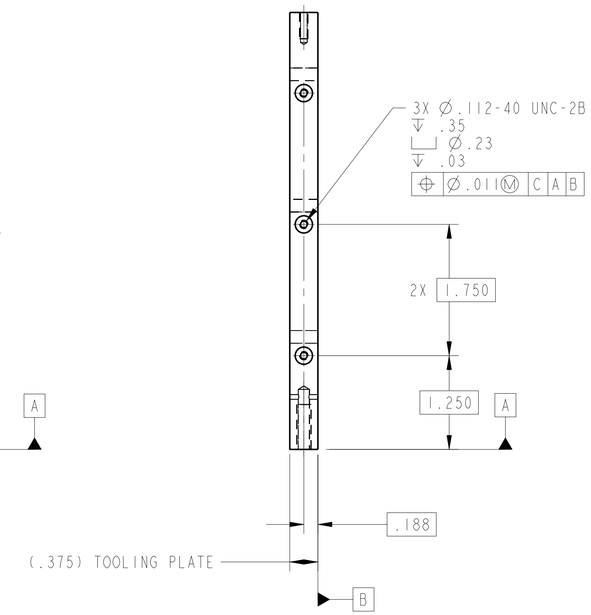

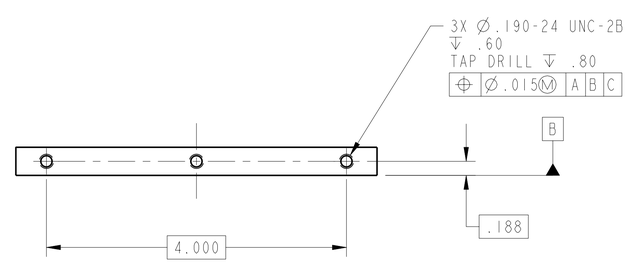

CHG	ZONE	DESCRIPTION	APP/DATE

REVISIONS

PRIOR TO USE VERIFY THE INTENDED PURPOSE IN PDM ("FOR" ATTRIBUTE)

UNLESS OTHERWISE SPECIFIED DIMENSIONS ARE IN INCHES

CONTRACT

CONTRACTOR

TOLERANCE ON		TASK ORDER	
.X	± 0.03	DRAFTER	DEZ/CLAPPER
.XX	± 0.01	ENGINEER	DES/TRIMARCHI
.XXX	± 0.005	DESIGNER	DEZ/CLAPPER
FRACTION	± -	DIMENSIONING AND TOLERANCING PER ASME Y14.5M-1994	
ANGULAR	± 0.50°		
BREAK EDGES	.01-.02		

NATIONAL AERONAUTICS AND SPACE ADMINISTRATION
JOHN H. GLENN RESEARCH CENTER
LEWIS FIELD
CLEVELAND, OHIO

INPUT/OUTPUT MODULE CHASSIS

140202MRA051

A054 I/O MODULE REAR PLATE

PDM REL LEVEL: Released PDM REVISION: -

PDM DATABASE: 140202_HP-120V_PPU

MODEL NAME: 140202_INP-OUT_MOD_ENDPLATE

CHECK FOR ANY OUTSTANDING ECO'S PRIOR TO USE

SIZE	DRAWING NUMBER	REV	BLDG	AREA
D	140202MRA054	-	301	-
			UNITS: INCH	
SCALE: 1/1	INITIAL REL DATE 04/25/2014	SHEET 1 OF 1	DISCIPLINE MECHANICAL	

PRO/E VERSION: Wildfire 5.0

SIZE D DRAWING NUMBER 140202MRA054 REV -

NAME:CREDDING OBJECT:140202_INP-OUT_MOD_ENDPLATE DATE:30-Mar-15 15:45:11

1. MATERIAL: 6061-T6 ALUMINUM, TOOLING PLATE, .375 THICK.

2. 63 Ra ALL MACHINED SURFACES.

3. ELECTROCHEMICAL ETCH DRAWING PART NUMBER 140202MRA055 ON SPECIFIED SURFACE, PER SAE-AS478, METHOD 7A, OR OPTIONAL METHOD: LASER ETCH DRAWING PART NUMBER 140202MRA055 ON SPECIFIED SURFACE, PER SAE-AS478, METHOD 15B1. (SHALLOW ENGRAVE 0.0001-0.0006 DEEP). (ZONE E5).

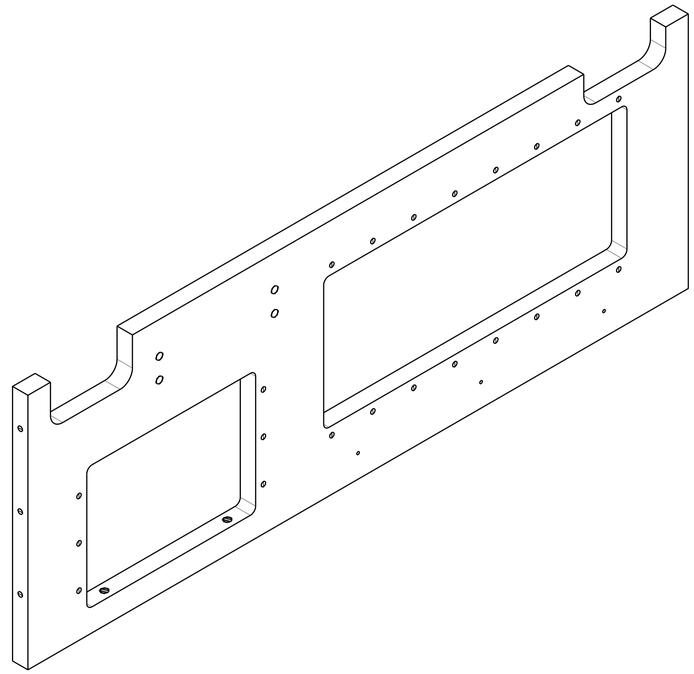

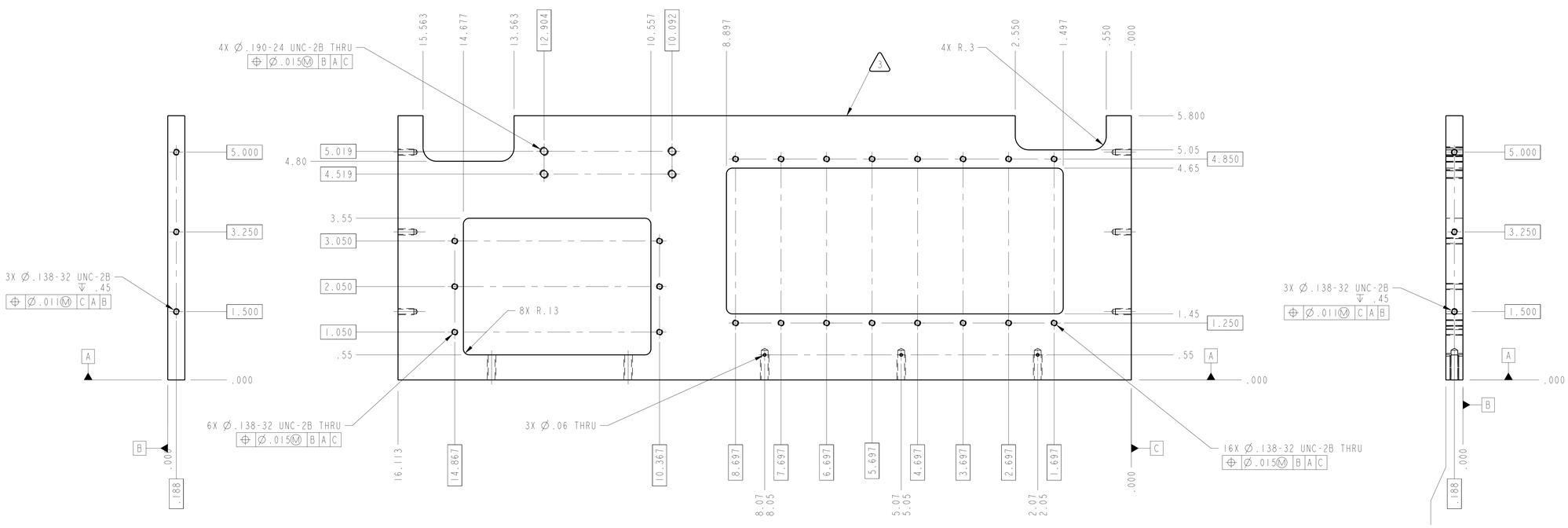

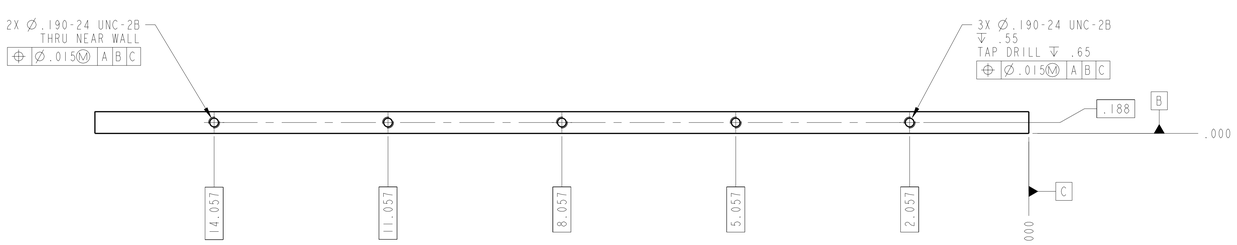

PRIOR TO USE VERIFY THE INTENDED PURPOSE IN PDM ("FOR" ATTRIBUTE)			
UNLESS OTHERWISE SPECIFIED DIMENSIONS ARE IN INCHES		CONTRACT	
		CONTRACTOR	
TOLERANCE ON		TASK ORDER	
.X	± 0.03	DRAFTER	DEZ/CLAPPER
.XX	± 0.01	ENGINEER	DES/TRIMARCHI
.XXX	± 0.005	DESIGNER	DEZ/CLAPPER
FRACTION	± -	DIMENSIONING AND TOLERANCING PER ASME Y14.5M-1994	
ANGULAR	± 0.50°		
BREAK EDGES	.01-.02		

PDM REL LEVEL: **Released** PDM REVISION: -
PDM DATABASE: I40202_HP-120V_PPU
MODEL NAME: I40202_INP-OUT_PCB_PLT_RIGHT
CHECK FOR ANY OUTSTANDING ECO'S PRIOR TO USE

CHG	ZONE	DESCRIPTION	APP/DATE

REVISIONS

NATIONAL AERONAUTICS AND SPACE ADMINISTRATION
JOHN H. GLENN RESEARCH CENTER
LEWIS FIELD
CLEVELAND, OHIO

INPUT/OUTPUT MODULE CHASSIS

I40202MRA051

A055 I/O PCB PLATE - RIGHT

SIZE	DRAWING NUMBER	REV	BLDG	AREA
E	I40202MRA055	-	301	-

UNITS: INCH

SCALE:	INITIAL REL DATE	SHEET	DISCIPLINE
1/1	04/25/2014	1 OF 1	MECHANICAL

PRO/E VERSION: Wildfire 5.0

SIZE E DRAWING NUMBER I40202MRA055 REV -

NAME:DREDDING OBJECT:140202_INP-OUT_PCB_PLT_RIGHT DATE:30-Mar-15 5:48:45

1. MATERIAL: 6061-T6 ALUMINUM, TOOLING PLATE, .375 THICK.

2. 63 Ra ALL MACHINED SURFACES.

3. ELECTROCHEMICAL ETCH DRAWING PART NUMBER 140202MRA056 ON SPECIFIED SURFACE, PER SAE-AS478, METHOD 7A, OR OPTIONAL METHOD: LASER ETCH DRAWING PART NUMBER 140202MRA056 ON SPECIFIED SURFACE, PER SAE-AS478, METHOD 15B1. (SHALLOW ENGRAVE 0.0001-0.0006 DEEP). (ZONE E5).

4. FOR ADDITIONAL INFORMATION, SEE SHEET 2.

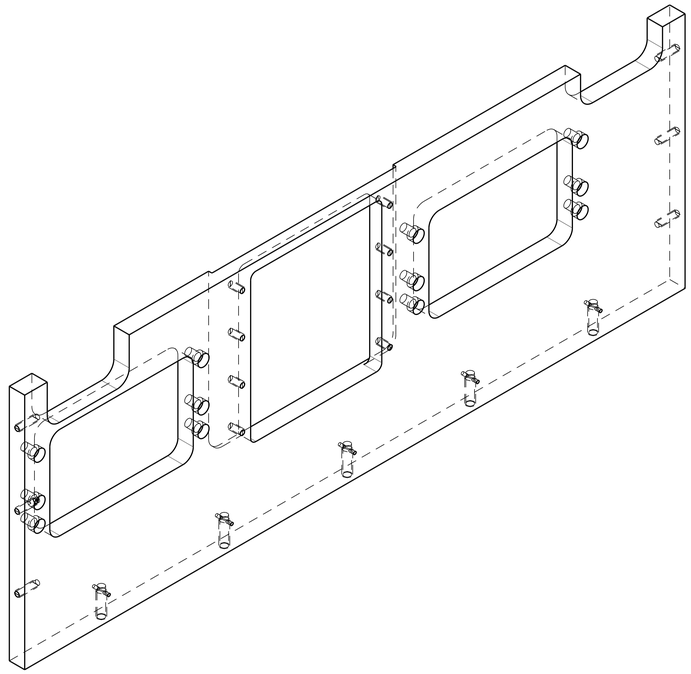

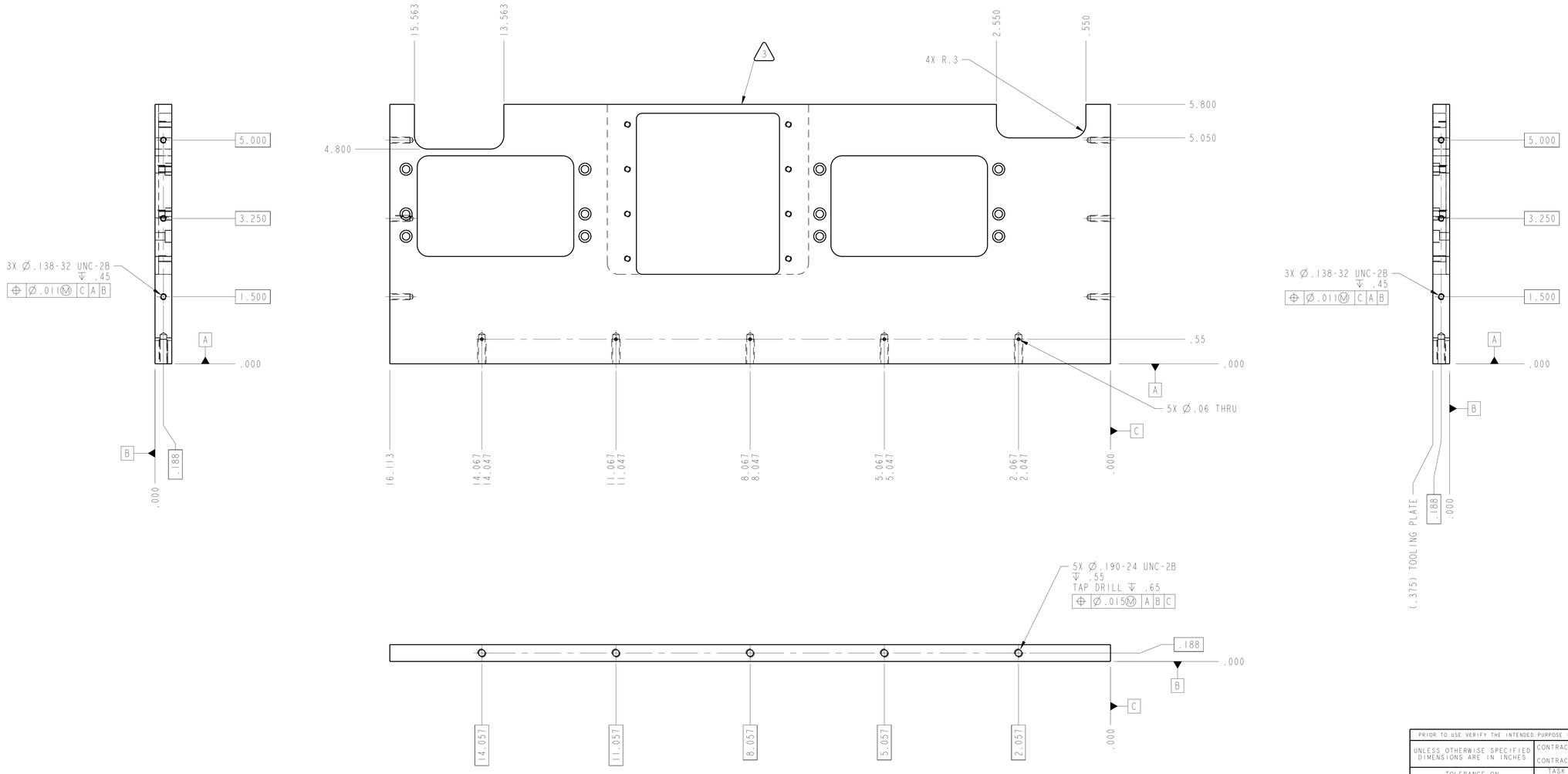

REV	CHG	ZONE	DESCRIPTION	APP/DATE
A	H1		ADDED GENERAL NOTE 4	RSC 06/30/14
	-		ADDED SHEET 2	

REVISIONS

PRIOR TO USE VERIFY THE INTENDED PURPOSE IN PDM ("FOR" ATTRIBUTE)

UNLESS OTHERWISE SPECIFIED DIMENSIONS ARE IN INCHES

TOLERANCE ON	
.X	± 0.03
.XX	± 0.01
.XXX	± 0.005
FRACTION	± -
ANGULAR	± 0.50°
BREAK EDGES	.01-.02

CONTRACT
CONTRACTOR
TASK ORDER

DRAFTER	DEZ/CLAPPER
ENGINEER	DES/TRIMARCHI
DESIGNER	DEZ/CLAPPER

DIMENSIONING AND TOLERANCING PER ASME Y14.5M-1994

NATIONAL AERONAUTICS AND SPACE ADMINISTRATION
JOHN H. GLENN RESEARCH CENTER
LEWIS FIELD
CLEVELAND, OHIO

INPUT/OUTPUT MODULE CHASSIS

140202MRA051

A056 I/O PCB PLATE - LEFT

PDM REL LEVEL: Released PDM REVISION: A
PDM DATABASE: 140202_HP-120V_PPU
MODEL NAME: 140202_INP-OUT_PCB_PLT_LEFT
CHECK FOR ANY OUTSTANDING ECO'S PRIOR TO USE

SIZE	DRAWING NUMBER	REV	BLDG	AREA
E	140202MRA056	A	301	-
SCALE: 1/1	INITIAL REL DATE 04/25/2014	SHEET 1 OF 2	UNITS: INCH	DISCIPLINE MECHANICAL

PRO/E VERSION: Wildfire 5.0

SIZE E DRAWING NUMBER 140202MRA056 REV A

NAME:GREGORIO OBJECT:140202_INP-OUT_PCB_PLT_LEFT_1 DATE:30-Mar-15 05:46:10

1. SEE SHEET 1 FOR ADDITIONAL INFORMATION, GENERAL NOTES AND TOLERANCES.

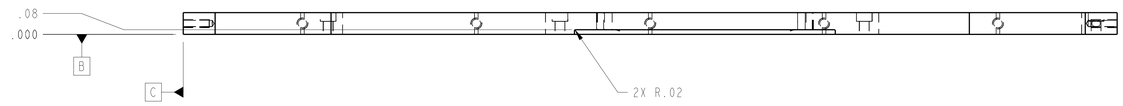

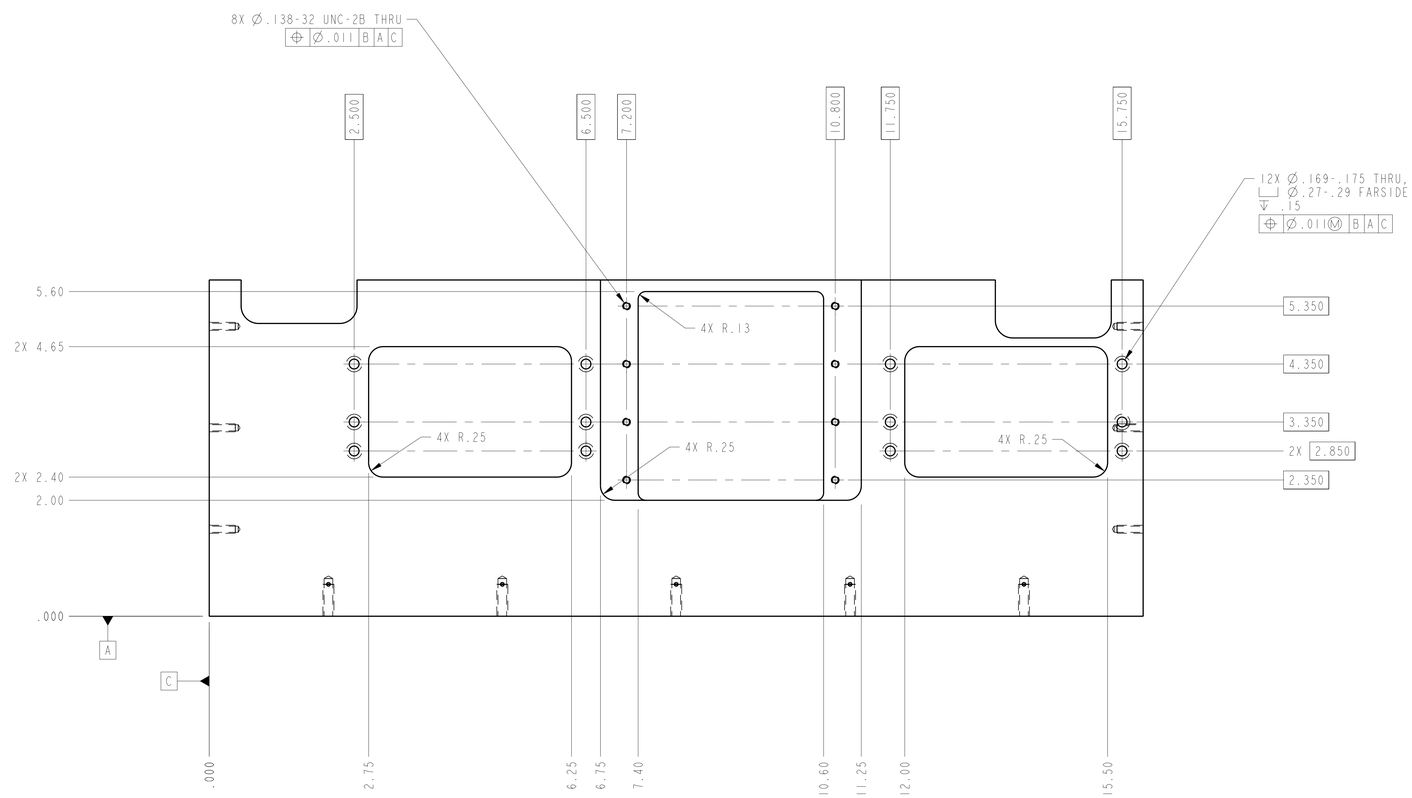

CHG	ZONE	DESCRIPTION	APP/DATE
A	-	SEE SHEET 1 ADDED NEW BACK VIEW AND ANOTHER TOP VIEW - ALL FEATURES DIMENSIONED IN THESE VIEWS ARE NEW	RSC 06/30/14

REVISIONS

SIZE	DRAWING NUMBER	REV	BLDG	AREA
E	I40202MRA056	A	301	-
			UNITS:	INCH

SCALE:	INITIAL REL DATE	SHEET	DISCIPLINE
1/1	04/25/2014	2 OF 2	MECHANICAL

PRO/E VERSION: Wildfire 5.0

SIZE E DRAWING NUMBER I40202MRA056 REV A

NAME:GREGORING OBJECT:140202_JNP-OUT_PCB_PLT_LEFT_0 DATE:30-Mar-15 15:46:10

1. MATERIAL: MULTIPURPOSE 110 COPPER.

2. 125 Ra ALL MACHINED SURFACES.

3. ELECTROCHEMICAL ETCH DRAWING PART NUMBER 140202MRA057 ON SPECIFIED SURFACE, PER SAE-AS478, METHOD 7A, OR OPTIONAL METHOD: LASER ETCH DRAWING PART NUMBER 140202MRA057 ON SPECIFIED SURFACE, PER SAE-AS478, METHOD 15B1. (SHALLOW ENGRAVE 0.0001-0.0006 DEEP). (ZONE C6).

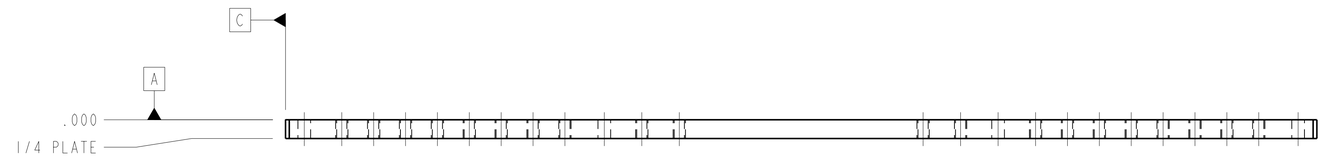

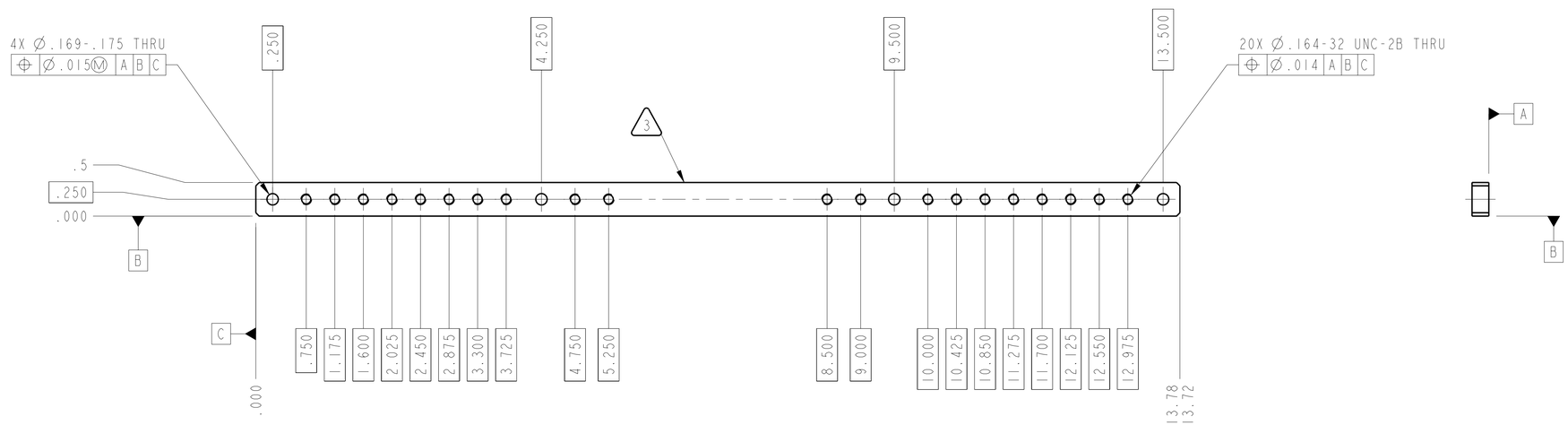

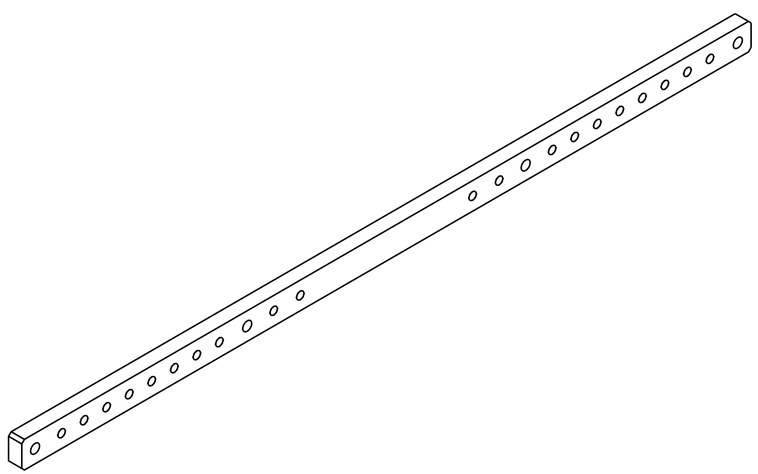

CHG	ZONE	DESCRIPTION	APP/DATE
A	-	METADATA HAS CHANGED. NO GEOMETRY OR DIMENSIONAL CHANGES HAVE OCCURRED.	RSC 08/07/14

REVISIONS

PRIOR TO USE VERIFY THE INTENDED PURPOSE IN PDM ("FOR" ATTRIBUTE)

UNLESS OTHERWISE SPECIFIED DIMENSIONS ARE IN INCHES

CONTRACT

CONTRACTOR

TOLERANCE ON		TASK ORDER	
.X	± 0.03	DRAFTER	DEZ/CLAPPER
.XX	± 0.01	ENGINEER	DES/TRIMARCHI
.XXX	± 0.005	DESIGNER	DEZ/CLAPPER
FRACTION	± -	DIMENSIONING AND TOLERANCING PER ASME Y14.5M-1994	
ANGULAR	± 0.50°		
BREAK EDGES	.01-.02		

PDM REL LEVEL: Released PDM REVISION: A

PDM DATABASE: 140202_HP-120V_PPU

MODEL NAME: 140202_RETURN_BUSBAR

CHECK FOR ANY OUTSTANDING ECO'S PRIOR TO USE

NATIONAL AERONAUTICS AND SPACE ADMINISTRATION
JOHN H. GLENN RESEARCH CENTER
LEWIS FIELD
CLEVELAND, OHIO

INPUT/OUTPUT MODULE ASSEMBLY

140202MRA050

A057

RETURN BUSBAR

SIZE	DRAWING NUMBER	REV	BLDG	AREA
D	140202MRA057	A	301	-

UNITS: INCH

SCALE:	INITIAL REL DATE	SHEET	DISCIPLINE
1/1	06/30/2014	1 OF 1	MECHANICAL

PRO/E VERSION:

SIZE D DRAWING NUMBER 140202MRA057 REV A

NAME:CREDDING OBJECT:140202_RETURN_BUSBAR DATE:30-Mar-15 15:50:24

1. MATERIAL: MULTIPURPOSE 110 COPPER.

2. 125 Ra ALL MACHINED SURFACES.

3. ELECTROCHEMICAL ETCH DRAWING PART NUMBER 140202MRA058 ON SPECIFIED SURFACE, PER SAE-AS478, METHOD 7A, OR OPTIONAL METHOD: LASER ETCH DRAWING PART NUMBER 140202MRA058 ON SPECIFIED SURFACE, PER SAE-AS478, METHOD 15B1. (SHALLOW ENGRAVE 0.0001-0.0006 DEEP). (ZONE C3).

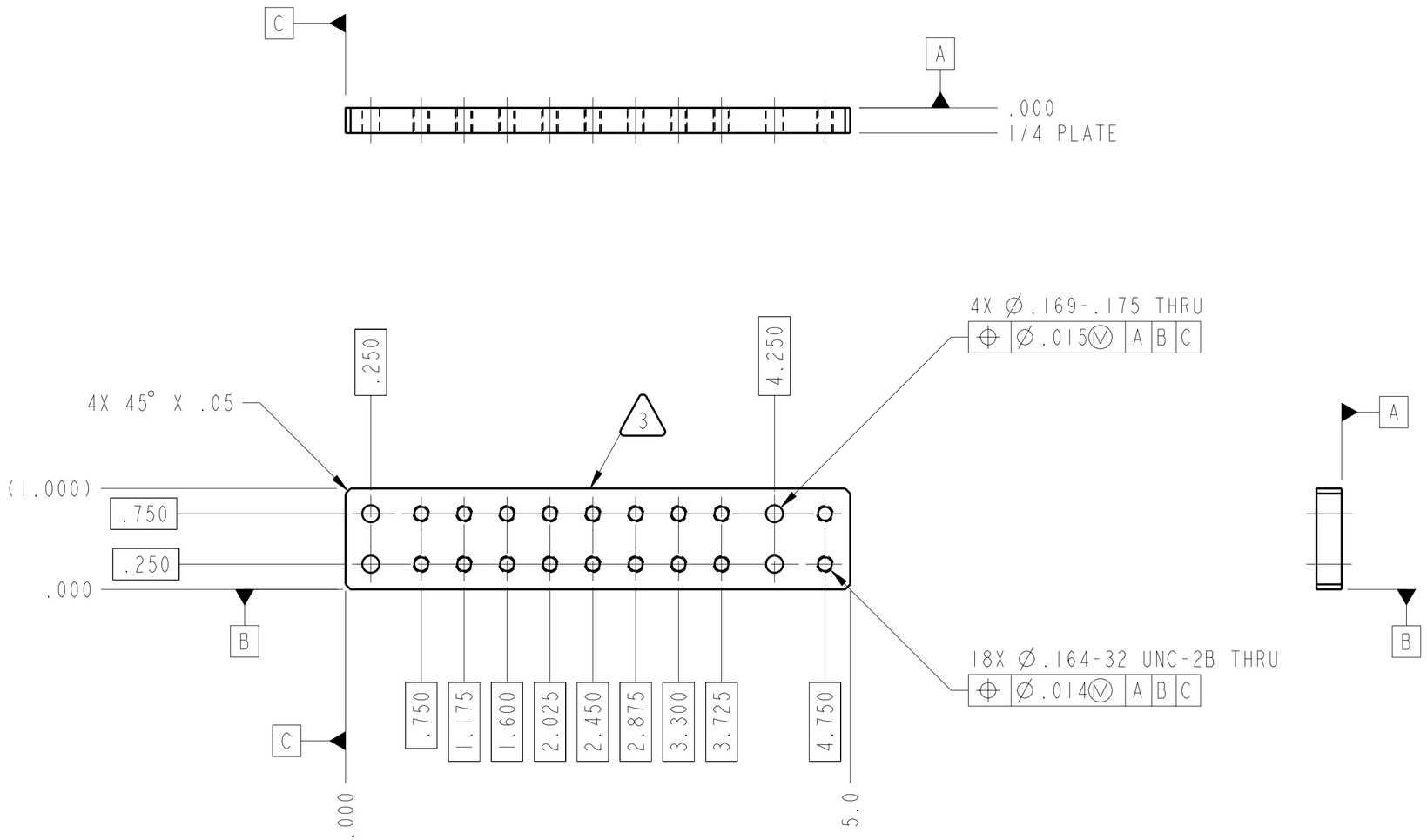

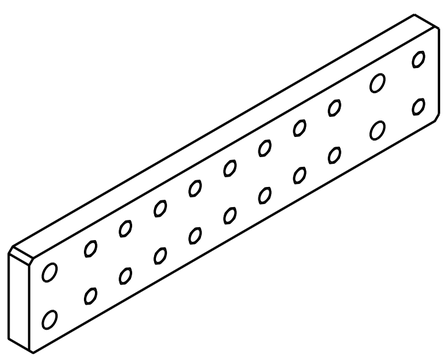

CHG	ZONE	DESCRIPTION	APP/DATE
		REVISIONS	

PRIOR TO USE VERIFY THE INTENDED PURPOSE IN PDM ("FOR" ATTRIBUTE)

UNLESS OTHERWISE SPECIFIED DIMENSIONS ARE IN INCHES		CONTRACT CONTRACTOR	
TOLERANCE ON		TASK ORDER	
.X	± 0.03	DRAFTER	DEZ/CLAPPER
.XX	± 0.01	ENGINEER	DES/TRIMARCHI
.XXX	± 0.005	DESIGNER	DEZ/CLAPPER
FRACTION	± -	DIMENSIONING AND TOLERANCING PER ASME Y14.5M-1994	
ANGULAR	± 0.50°		
BREAK EDGES	.01-.02		

PDM REL LEVEL: **Released** PDM REVISION: -

PDM DATABASE: 140202_HP-120V_PPU

MODEL NAME: 140202_RAW_BUSBAR

CHECK FOR ANY OUTSTANDING ECO'S PRIOR TO USE

NATIONAL AERONAUTICS AND SPACE ADMINISTRATION
JOHN H. GLENN RESEARCH CENTER
LEWIS FIELD
CLEVELAND, OHIO

INPUT/OUTPUT MODULE ASSEMBLY

140202MRA050

A058

LOWER BUSBAR

SIZE	DRAWING NUMBER	REV	BLDG	AREA
C	140202MRA058	-	301	-
			UNITS: INCH	
SCALE: 1/1	INITIAL REL DATE 06/30/2014	SHEET 1 OF 1	DISCIPLINE MECHANICAL	

PRO/E VERSION:

SIZE C DRAWING NUMBER 140202MRA058 REV -

NAME:CREDDING OBJECT:140202_RAW_BUSBAR DATE:30-Mar-15 15:51:59

1. MATERIAL: 16ga SHEET ALUMINUM 6061-T6.

2. 125 Ra ALL MACHINED SURFACES.

3. SURFACE TREATMENT PER MIL-C-5541, CLASS 3. USE IRIDITE 14.2 OR REQUESTER APPROVED EQUAL PER MIL-DTL-81706, CLASS 3, FORM II, METHOD B OR C, AS APPLICABLE. SPOT TOUCH UP BY METHOD B.

4. IDENTIFY PART WITH DRAWING NUMBER 140202MRA061 ON SPECIFIED SURFACE BY EITHER:
   - ELECTROCHEMICAL ETCH PER SAE-AS478, METHOD 7A,
   OR
   - LASER ENGRAVE PER SAE-AS478, METHOD 15B1.
   LOCATE APPROX. AS SHOWN (ZONE C4).

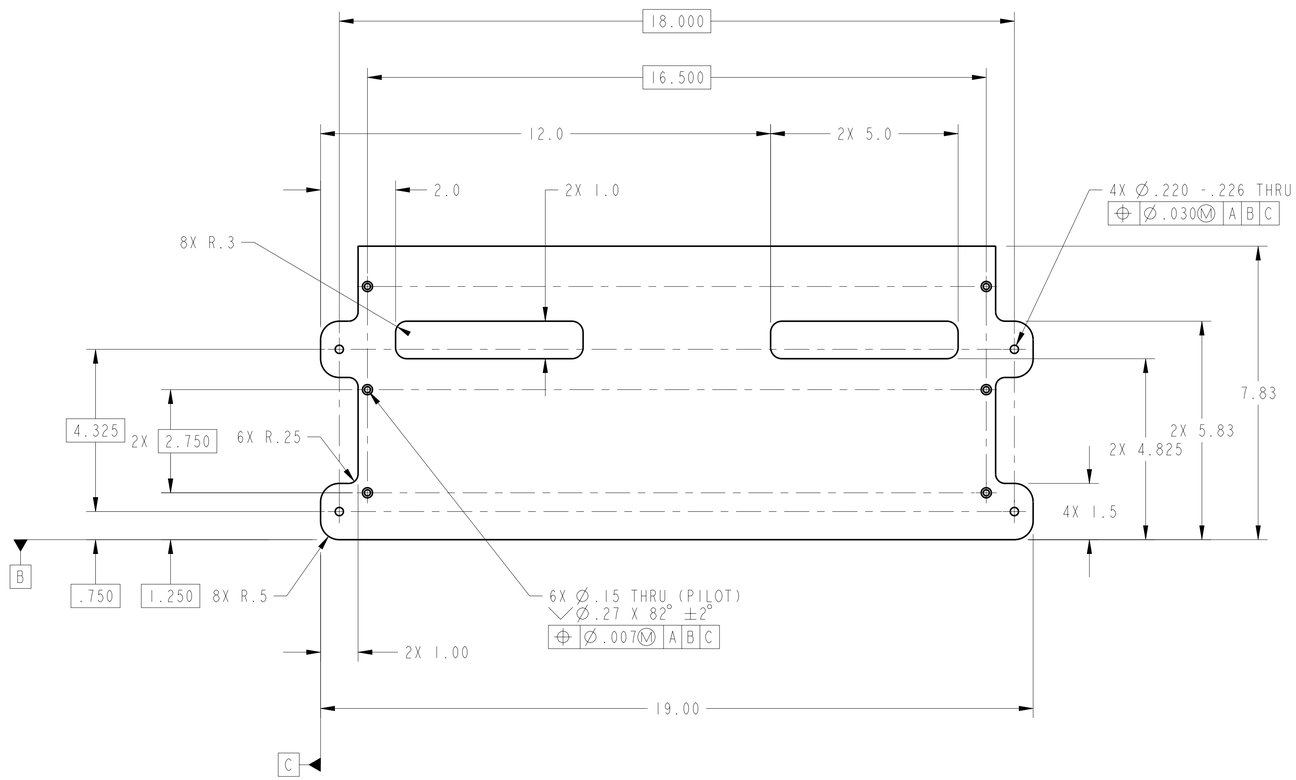

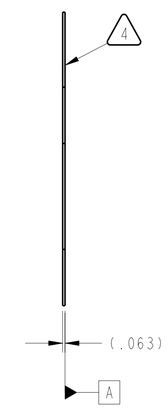

CHG	ZONE	DESCRIPTION	APP/DATE
B	D1	ADDED SURFACE TREATMENT	AB 04/10/15
	D5	2X 5.0 WAS 2X 4.0	RSC 08/04/14
	C6	2.0 WAS 3.0	
A	D1	ADDED FLAG NOTE 4	RSC 06/23/14
	B6	6X (Ø.128-.134 THRU) ⌵Ø.26-.28 X 82° ±2° WAS 6X Ø.128-.134 THRU ⌵ Ø.26-.27 X 82°	

REVISIONS

PRIOR TO USE VERIFY THE INTENDED PURPOSE IN PDM ("FOR" ATTRIBUTE)

UNLESS OTHERWISE SPECIFIED DIMENSIONS ARE IN INCHES

CONTRACT
CONTRACTOR

TOLERANCE ON		TASK ORDER	
.X	± 0.03	DRAFTER	DEZ/CLAPPER
.XX	± 0.01	ENGINEER	DES/ TRIMARCHI
.XXX	± 0.005	DESIGNER	DEZ/ CLAPPER
FRACTION	± -	DIMENSIONING AND TOLERANCING PER ASME Y14.5M-1994	
ANGULAR	± 0.50°		
BREAK EDGES	.01 - .02		

PDM REL LEVEL: **Released** PDM REVISION: **B**

PDM DATABASE: **140202_HP-120V_PPU**
MODEL NAME: **140202_AUX_MOD_NEW_COVER**

CHECK FOR ANY OUTSTANDING ECO'S PRIOR TO USE

NATIONAL AERONAUTICS AND SPACE ADMINISTRATION
JOHN H. GLENN RESEARCH CENTER
LEWIS FIELD
CLEVELAND, OHIO

AUXILIARY MODULE ASSEMBLY

140202MRA060

A061 TRANSITION SIDE COVER

SIZE	DRAWING NUMBER	REV	BLDG	AREA
D	140202MRA061	B	301	-

UNITS: INCH

SCALE:	INITIAL REL DATE	SHEET	DISCIPLINE
1/2	04/30/2015	1 OF 1	MECHANICAL

PRO/E VERSION: Wildfire 5.0

SIZE D DRAWING NUMBER 140202MRA061 REV B

NAME:CREDDING OBJECT:140202_AUX_MOD_NEW_COVER DATE:04-May-15 11:23:41

1. MATERIAL: 6061-T6 ALUMINUM.

2. 63 Ra ALL MACHINED SURFACES.

3. IDENTIFY PART WITH DRAWING NUMBER 140202MRA063 ON SPECIFIED SURFACE USING EITHER:
- ELECTROCHEMICAL ETCH PER SAE-AS478 METHOD 7A,
OR
- LASER ETCH PER SAE-AS478 METHOD 15B1 USING 1/8" HIGH CHARACTERS. LOCATE APPROXIMATELY AS SHOWN (ZONE B4).

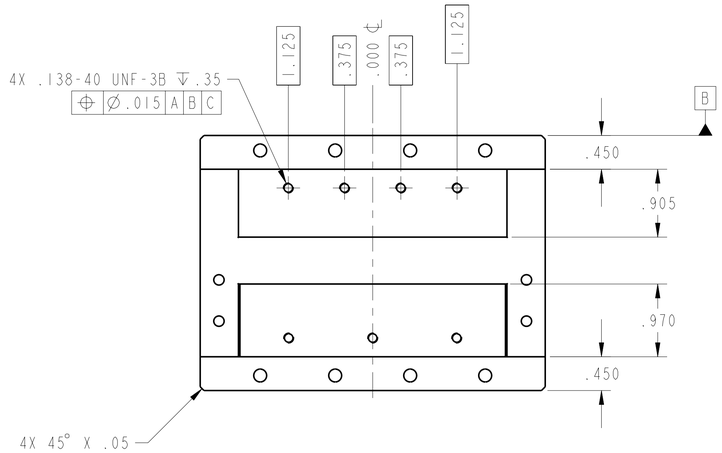

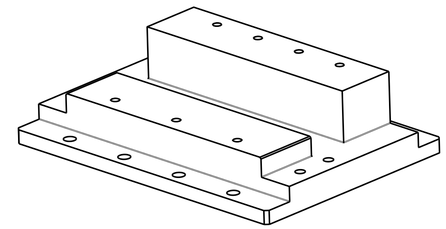

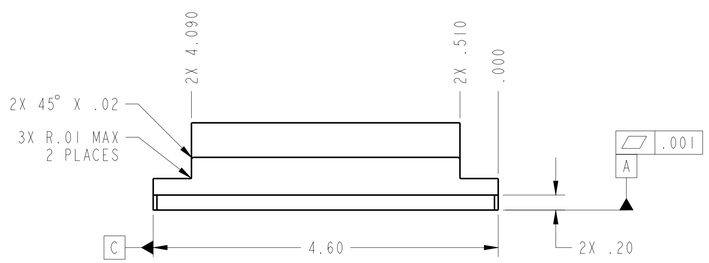

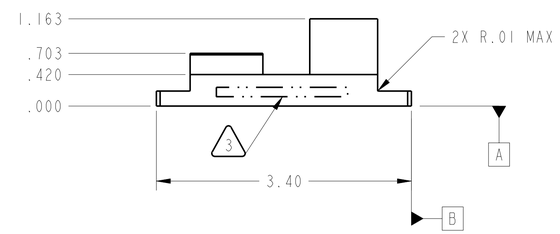

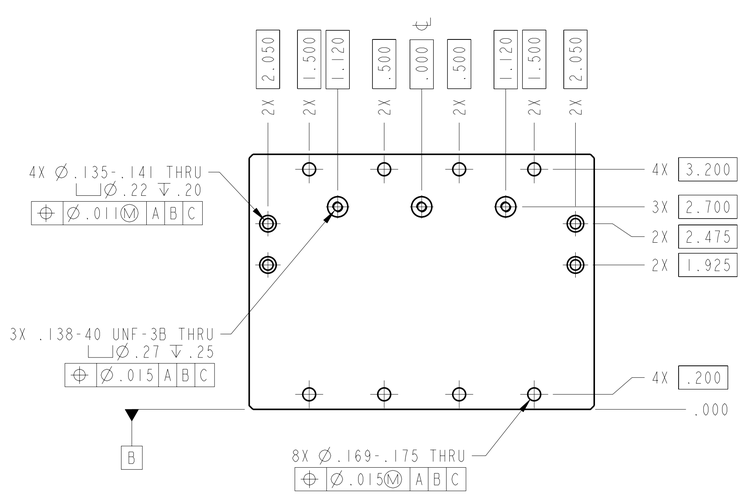

CHG	ZONE	DESCRIPTION	APP/DATE

REVISIONS

PRIOR TO USE VERIFY THE INTENDED PURPOSE IN PDM ("FOR" ATTRIBUTE)

UNLESS OTHERWISE SPECIFIED DIMENSIONS ARE IN INCHES

CONTRACT

CONTRACTOR

TOLERANCE ON		TASK ORDER	
.X	± 0.03	DRAFTER	DEZ/C. REDDING
.XX	± 0.01	ENGINEER	DES/TRIMARCHI
.XXX	± 0.005	DESIGNER	DEZ/CLAPPER
FRACTION	± -	DIMENSIONING AND TOLERANCING PER ASME Y14.5M-1994	
ANGULAR	± 0.50°		
BREAK EDGES	.01-.03		

NATIONAL AERONAUTICS AND SPACE ADMINISTRATION
JOHN H. GLENN RESEARCH CENTER
LEWIS FIELD
CLEVELAND, OHIO

AUX MOD BRACKET ASSEMBLY

140202MRA062

A063

AUX MOD BRACKET BASE

PDM REL LEVEL: Released PDM REVISION: -

PDM DATABASE: 140202_HP-120V_PPU

MODEL NAME: 140202MRA063_A-PWR_PC-BRK_BASE

CHECK FOR ANY OUTSTANDING ECO'S PRIOR TO USE

SIZE	DRAWING NUMBER	REV	BLDG	AREA
D	140202MRA063	-	301	-

UNITS: INCH

SCALE:	INITIAL REL DATE	SHEET	DISCIPLINE
1/1	05/01/2015	1 OF 1	MECHANICAL

PRO/E VERSION: Wildfire 5.0

SIZE D DRAWING NUMBER 140202MRA063 REV -

NAME:CREDDING OBJECT:140202MRA063_A-PWR_PC-BRK_BASE DATE:04-May-15 11:25:55

1. MATERIAL: TYPE 6061-T6 ALUMINUM.
2. 125 Ra ALL ALL MACHINED SURFACES.
3. DRAWING DEVELOPED FROM TECHNICIAN FABRICATED PART. ACTUAL FEATURE DIMENSIONAL TOLERANCE UNKNOWN.
4. TABULATED HOLE DIMENSIONS ARE BASIC.
5. IDENTIFY PART BY BAGGING AND TAGGING WITH DRAWING NUMBER PLUS THE VERSION DASH NUMBER (EXAMPLE: 140202MRA064-1) PER SAE-AS478, METHOD 35.

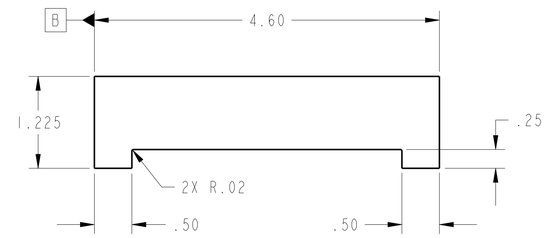

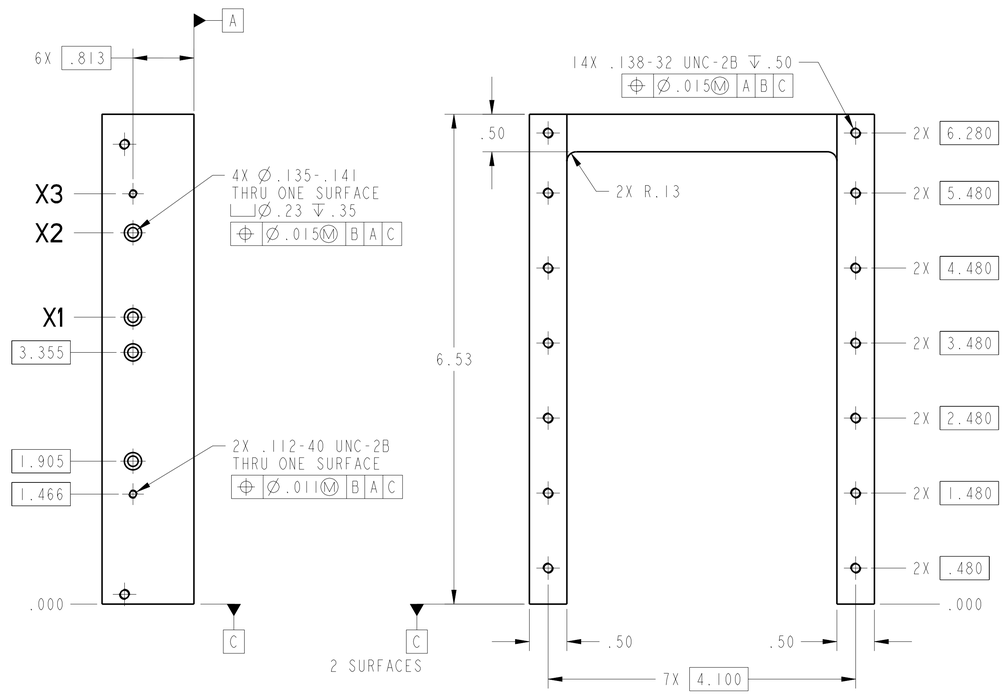

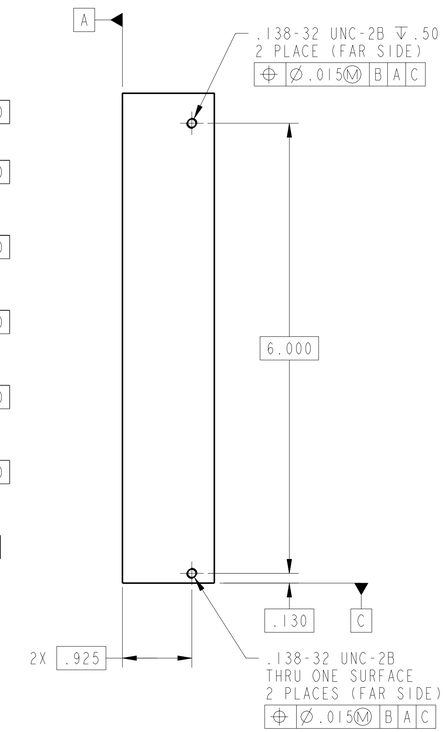

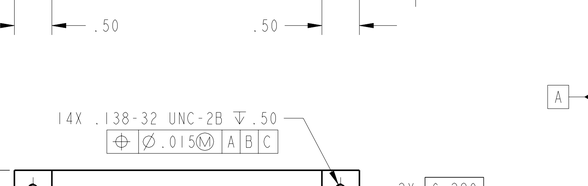

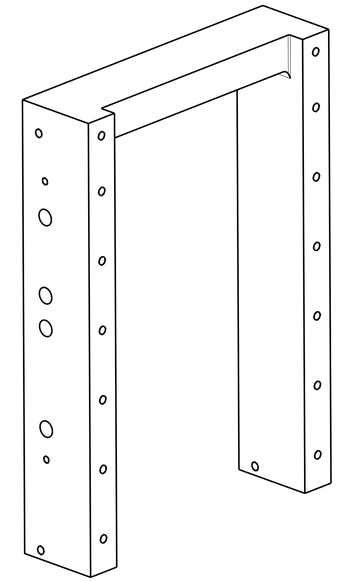

A064-2	3.800	5.250	5.700
A064-1	3.825	4.950	5.470
PN	X1	X2	X3

CHG	ZONE	DESCRIPTION	APP/DATE

REVISIONS

PRIOR TO USE VERIFY THE INTENDED PURPOSE IN PDM ("FOR" ATTRIBUTE)

UNLESS OTHERWISE SPECIFIED DIMENSIONS ARE IN INCHES

CONTRACT
CONTRACTOR

TOLERANCE ON		TASK ORDER	
.X	± 0.03	DRAFTER	DEZ/C. REDDING
.XX	± 0.01	ENGINEER	DES/TRIMARCHI
.XXX	± 0.005	DESIGNER	DEZ/CLAPPER
FRACTION	± -	DIMENSIONING AND TOLERANCING PER ASME Y14.5M-1994	
ANGULAR	± 0.50°		
BREAK EDGES	.01 - .03		

NATIONAL AERONAUTICS AND SPACE ADMINISTRATION
JOHN H. GLENN RESEARCH CENTER
LEWIS FIELD
CLEVELAND, OHIO

AUX MOD BRACKET ASSEMBLY
140202MRA062

A064-1 A064-2 AUX MOD BRACKET STAND

PDM REL LEVEL: Released PDM REVISION: -
PDM DATABASE: 140202_HP-120V_PPU
MODEL NAME: 140202MRA064_A-PWR_PC-BRK_STAND
CHECK FOR ANY OUTSTANDING ECO'S PRIOR TO USE

SIZE	DRAWING NUMBER	REV	BLDG	AREA
D	140202MRA064	-	301	-
			UNITS: INCH	
SCALE: 1/1	INITIAL REL DATE 05/01/2015	SHEET 1 OF 1	DISCIPLINE MECHANICAL	

PRO/E VERSION: Wildfire 5.0

SIZE D DRAWING NUMBER 140202MRA064 REV -

NAME:CREDDING OBJECT:140202MRA064_A-PWR_PC-BRK_STAND DATE:04-May-15 11:27:36

1. MATERIAL: 6061-T6 ALUMINUM.

2. DRAWING DEVELOPED FROM TECHNICIAN FABRICATED PART. ACTUAL FEATURE DIMENSIONAL TOLERANCE UNKNOWN.

3. IDENTIFY BY BAGGING TAGGING WITH DRAWING NUMBER 140202MRA066, PER SAE-AS478, METHOD 35.

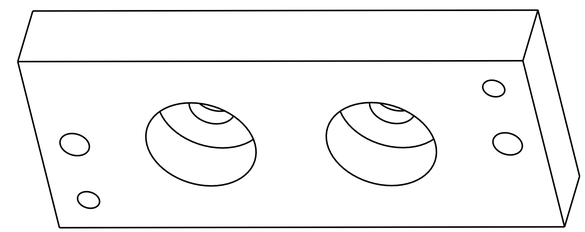

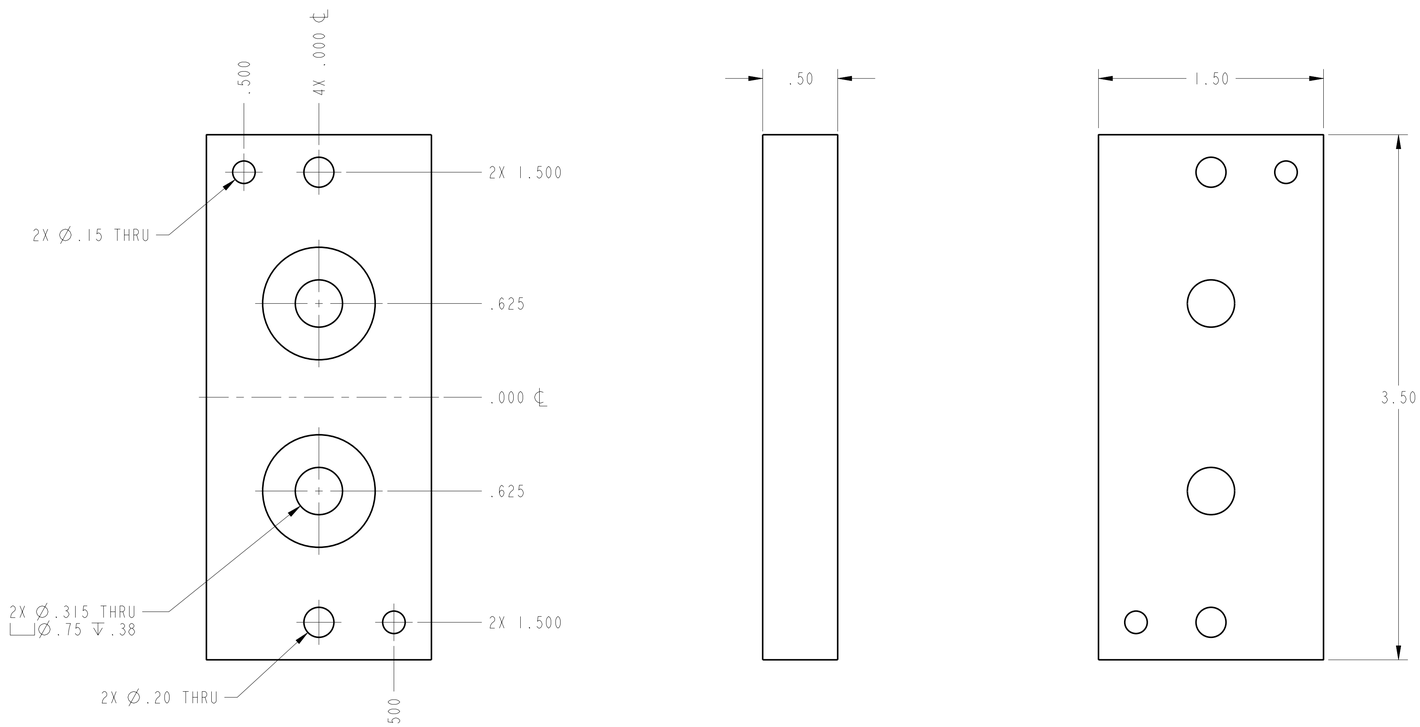

CHG	ZONE	DESCRIPTION	APP/DATE

REVISIONS

PRIOR TO USE VERIFY THE INTENDED PURPOSE IN PDM ("FOR" ATTRIBUTE)

UNLESS OTHERWISE SPECIFIED DIMENSIONS ARE IN INCHES

TOLERANCE ON	
.X	± 0.05
.XX	± 0.01
.XXX	± 0.005
FRACTION	± -
ANGULAR	± 0.50°
BREAK EDGES	.01-.03

DIMENSIONING AND TOLERANCING PER ASME Y14.5M-1994

CONTRACT	
CONTRACTOR	
TASK ORDER	
DRAFTER	LMP/C. REDDING
ENGINEER	LEM/BIRCHENOUGH
DESIGNER	LEM/BIRCHENOUGH

NATIONAL AERONAUTICS AND SPACE ADMINISTRATION
JOHN H. GLENN RESEARCH CENTER
LEWIS FIELD
CLEVELAND, OHIO

DIODE MOUNT ASSEMBLY

140202MRA065

A066 DIODE MOUNT BASE

PDM REL LEVEL: Released PDM REVISION: -

PDM DATABASE: 140202_HP-120V_PPU

MODEL NAME: 140202MRA066_DIODE_MOUNT

CHECK FOR ANY OUTSTANDING ECO'S PRIOR TO USE

SIZE	DRAWING NUMBER	REV	BLDG	AREA
D	140202MRA066	-	301	-

UNITS: INCH

SCALE:	INITIAL REL DATE	SHEET	DISCIPLINE
2/1	04/16/2015	1 OF 1	MECHANICAL

PRO/E VERSION: Wildfire 5.0

SIZE D DRAWING NUMBER 140202MRA066 REV -

NAME:CREDDING OBJECT:140202MRA066_DIODE_MOUNT DATE:16-Apr-15 10:45:02

1. MATERIAL: MULTIPURPOSE 110 COPPER, .040" THICK.

2. DRAWING DEVELOPED FROM TECHNICIAN FABRICATED PART. ACTUAL FEATURE DIMENSIONAL TOLERANCE UNKNOWN.

3. IDENTIFY BY BAGGING TAGGING WITH DRAWING NUMBER 140202MRA067, PER SAE-AS478, METHOD 35.

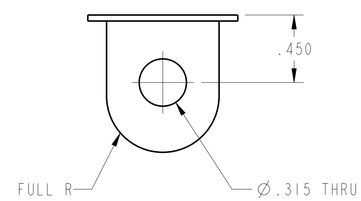

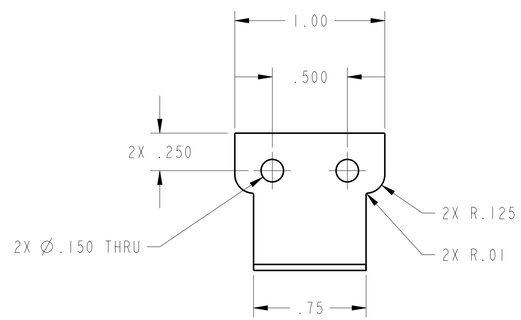

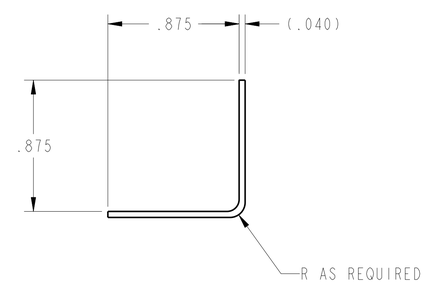

CHG	ZONE	DESCRIPTION	APP/DATE

REVISIONS

PRIOR TO USE VERIFY THE INTENDED PURPOSE IN PDM ("FOR" ATTRIBUTE)

UNLESS OTHERWISE SPECIFIED DIMENSIONS ARE IN INCHES

CONTRACT

CONTRACTOR

TOLERANCE ON		TASK ORDER	
.X	± 0.03	DRAFTER	LMP/C. REDDING
.XX	± 0.01	ENGINEER	LEM/BIRCHENOUGH
.XXX	± 0.005	DESIGNER	LEM/BIRCHENOUGH
FRACTION	± -	DIMENSIONING AND TOLERANCING PER ASME Y14.5M-1994	
ANGULAR	± 0.50°		
BREAK EDGES	.01-.03		

NATIONAL AERONAUTICS AND SPACE ADMINISTRATION
JOHN H. GLENN RESEARCH CENTER
LEWIS FIELD
CLEVELAND, OHIO

DIODE MOUNT ASSEMBLY

140202MRA065

A067

DIODE BRACKET

PDM REL LEVEL: Released PDM REVISION: -

PDM DATABASE: 140202_HP-120V_PPU

MODEL NAME: 140202MRA067_DIODE_BRKT

CHECK FOR ANY OUTSTANDING ECO'S PRIOR TO USE

SIZE	DRAWING NUMBER	REV	BLDG	AREA
D	140202MRA067	-	301	-
			UNITS: INCH	
SCALE: 2/1	INITIAL REL DATE 04/16/2015	SHEET 1 OF 1	DISCIPLINE MECHANICAL	

PRO/E VERSION: Wildfire 5.0

SIZE D DRAWING NUMBER 140202MRA067 REV -

NAME:CREDDING OBJECT:140202MRA067_DIODE_BRKT DATE:16-Apr-15 10:44:31

1. MATERIAL: GAROLITE TUBE, 5/16" OD X 1/4" ID, 1/32" THICK WALL. USE MCMASTER CARR PART #8527K113.

2. DRAWING DEVELOPED FROM TECHNICIAN FABRICATED PART. ACTUAL FEATURE DIMENSIONAL TOLERANCE UNKNOWN.

3. IDENTIFY BY BAGGING TAGGING WITH DRAWING NUMBER 140202MRA068, PER SAE-AS478, METHOD 35.

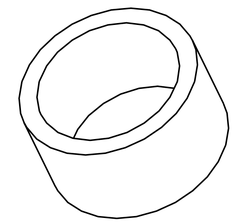

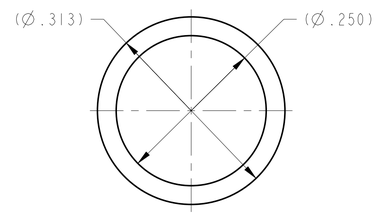

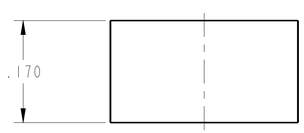

CHG	ZONE	DESCRIPTION	APP/DATE

REVISIONS

PRIOR TO USE VERIFY THE INTENDED PURPOSE IN PDM ("FOR" ATTRIBUTE)

UNLESS OTHERWISE SPECIFIED DIMENSIONS ARE IN INCHES		CONTRACT / CONTRACTOR	
TOLERANCE ON		TASK ORDER	
.X	± 0.03	DRAFTER	LMP/C. REDDING
.XX	± 0.01	ENGINEER	LEM/BIRCHENOUGH
.XXX	± 0.005	DESIGNER	LEM/BIRCHENOUGH
FRACTION	± -	DIMENSIONING AND TOLERANCING PER ASME Y14.5M-1994	
ANGULAR	± 0.50°		
BREAK EDGES	.01-.03		

PDM REL LEVEL: Released PDM REVISION: -

PDM DATABASE: 140202_HP-120V_PPU

MODEL NAME: 140202MRA068_GAROLITE_SLEEVE

CHECK FOR ANY OUTSTANDING ECO'S PRIOR TO USE

NATIONAL AERONAUTICS AND SPACE ADMINISTRATION
JOHN H. GLENN RESEARCH CENTER
LEWIS FIELD
CLEVELAND, OHIO

DIODE MOUNT ASSEMBLY

140202MRA065

A068 DIODE ISOLATION SLEEVE

SIZE	DRAWING NUMBER	REV	BLDG	AREA
D	140202MRA068	-	301	-
			UNITS: INCH	
SCALE: 8/1	INITIAL REL DATE 04/16/2015	SHEET 1 OF 1	DISCIPLINE MECHANICAL	

PRO/E VERSION: Wildfire 5.0

SIZE D DRAWING NUMBER 140202MRA068 REV -

NAME:CREDDING OBJECT:140202MRA068_GAROLITE_SLEEVE DATE:16-Apr-15 10:43:59

1. MATERIAL: 3/8" THICK, 6061-T6 ALUMINUM, TOOLING PLATE.

2. 63 Ra ALL MACHINED SURFACES.

3. ELECTROCHEMICAL ETCH DRAWING PART NUMBER 140202MRA072 ON SPECIFIED SURFACE, PER SAE-AS478, METHOD 7A, OR OPTIONAL METHOD: LASER ETCH DRAWING PART NUMBER 140202MRA072 ON SPECIFIED SURFACE, PER SAE-AS478, METHOD 15B1. (SHALLOW ENGRAVE 0.0001-0.0006 DEEP). (ZONE F8).

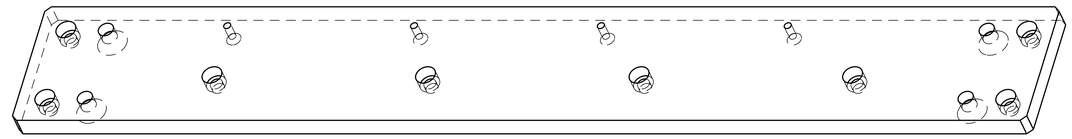

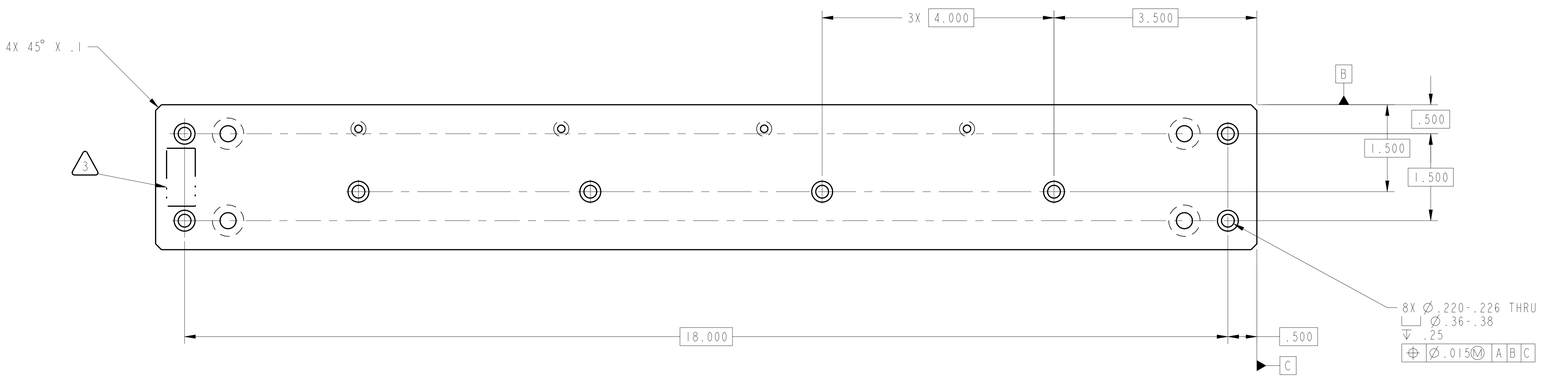

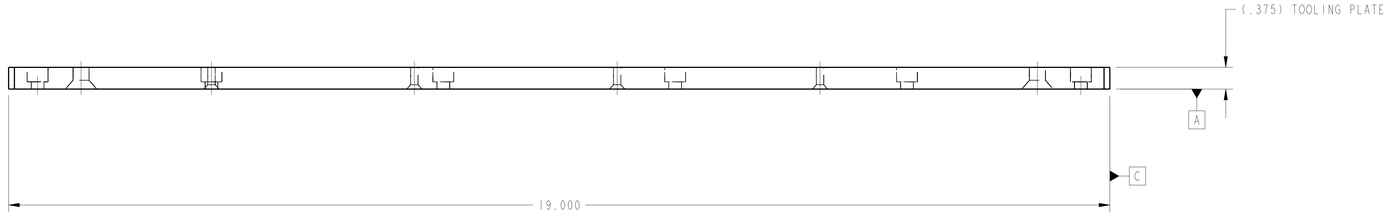

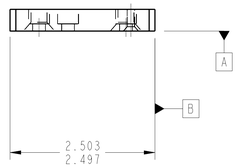

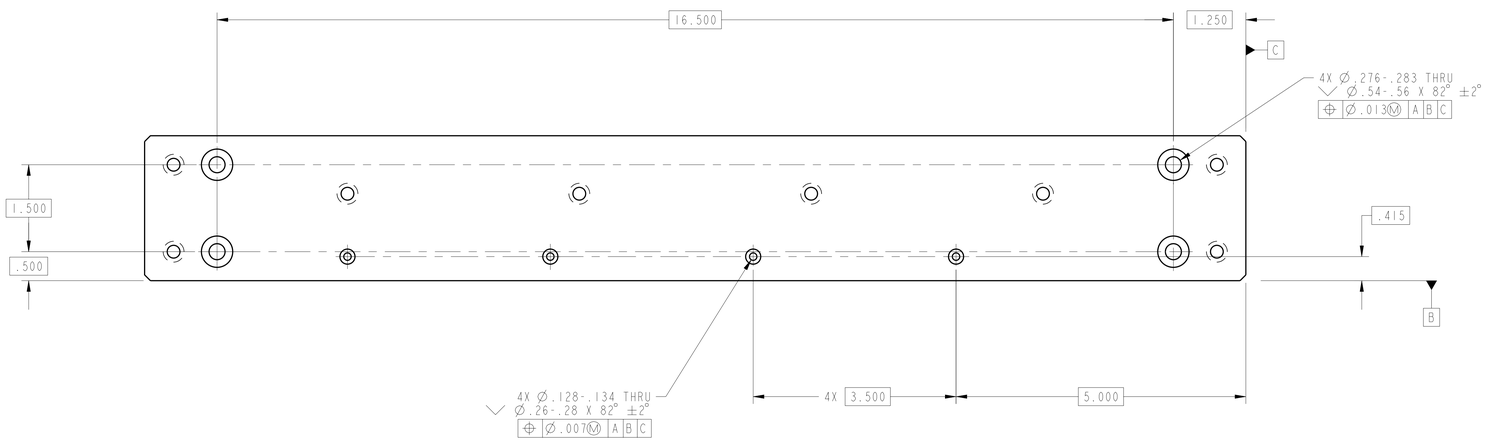

CHG	ZONE	DESCRIPTION	APP/DATE
A	A1	MCM CHASSIS ASSEMBLY WAS SCM CHASSIS ASSEMBLY MCM BASEPLATE WAS SCM BASEPLATE	RSC 06/10/14

REVISIONS

PRIOR TO USE VERIFY THE INTENDED PURPOSE IN PDM ("FOR" ATTRIBUTE)

UNLESS OTHERWISE SPECIFIED DIMENSIONS ARE IN INCHES

CONTRACT

CONTRACTOR

TOLERANCE ON		TASK ORDER	
.X	± 0.03	DRAFTER	DEZ/CLAPPER
.XX	± 0.01	ENGINEER	DES/TRIMARCHI
.XXX	± 0.005	DESIGNER	DEZ/CLAPPER
FRACTION	± -	DIMENSIONING AND TOLERANCING PER ASME Y14.5M-1994	
ANGULAR	± 0.50°		
BREAK EDGES	.01-.02		

PDM REL LEVEL: **Released** PDM REVISION: A

PDM DATABASE: I40202_HP-120V_PPU

MODEL NAME: I40202_MCM_BASEPLATE

CHECK FOR ANY OUTSTANDING ECO'S PRIOR TO USE

NATIONAL AERONAUTICS AND SPACE ADMINISTRATION
JOHN H. GLENN RESEARCH CENTER
LEWIS FIELD
CLEVELAND, OHIO

MCM CHASSIS ASSEMBLY

I40202MRA071

A072 MCM BASEPLATE

SIZE	DRAWING NUMBER	REV	BLDG	AREA
E	I40202MRA072	A	301	-

UNITS: INCH

SCALE:	INITIAL REL DATE	SHEET	DISCIPLINE
1/1	05/23/2014	1 OF 1	MECHANICAL

PRO/E VERSION: Wildfire 5.0

SIZE E DRAWING NUMBER I40202MRA072 REV A

NAME:DRESDONG OBJECT:140202_MCM_BASEPLATE DATE:15-Apr-15 11:52:38

1. MATERIAL: 6061-T6 ALUMINUM.

2. 63 Ra ALL OVER UNLESS OTHERWISE NOTED.

3. ELECTROCHEMICAL ETCH DRAWING PART NUMBER 140202MRA073 ON SPECIFIED SURFACE, PER SAE-AS478, METHOD 7A, OR OPTIONAL METHOD: LASER ETCH DRAWING PART NUMBER 140202MRA073 ON SPECIFIED SURFACE PER SAE-AS478, METHOD 15B1. (SHALLOW ENGRAVE 0.0001-0.0006 DEEP). (ZONE G6).

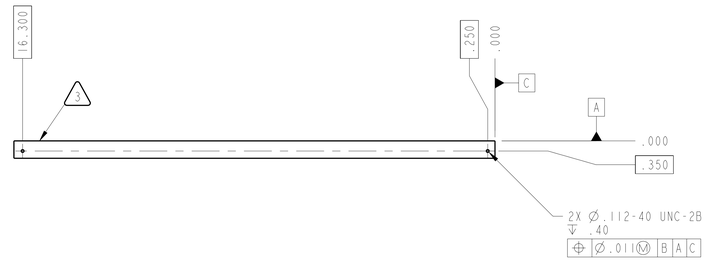

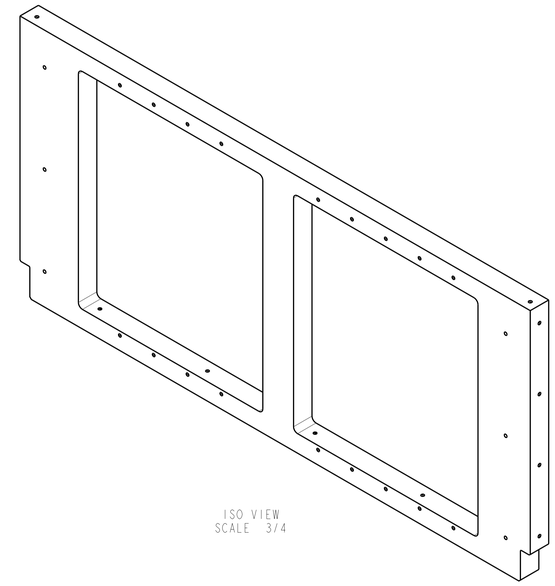

ISO VIEW
SCALE 3/4

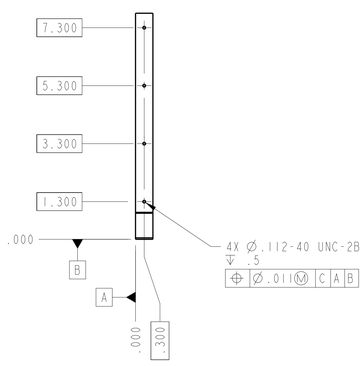

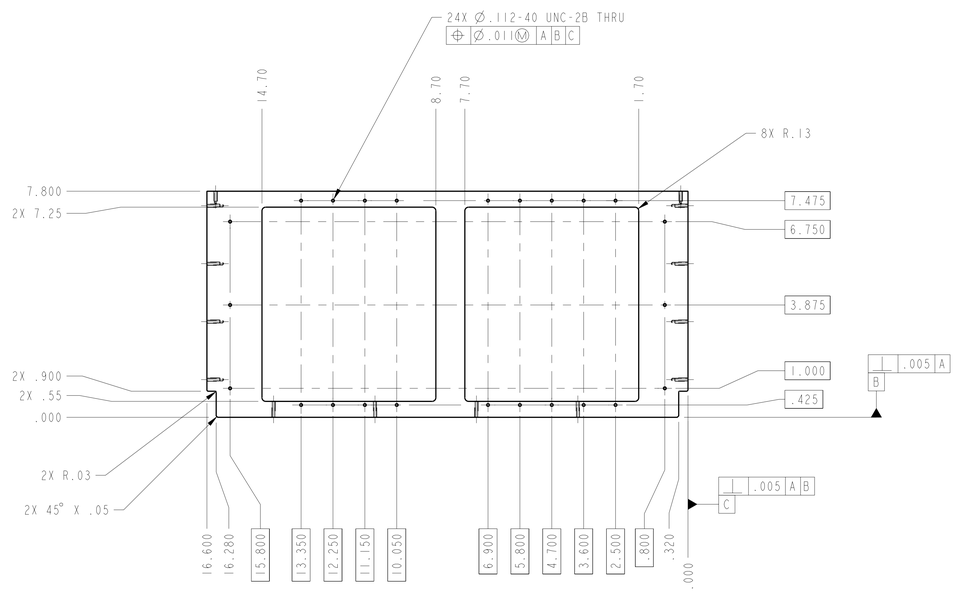

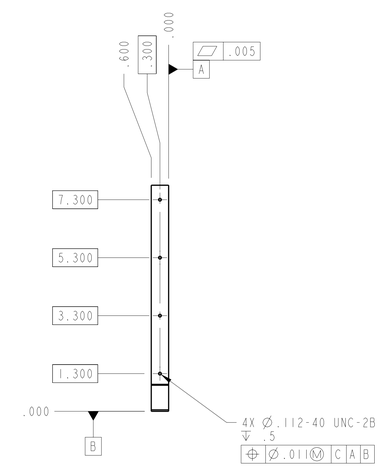

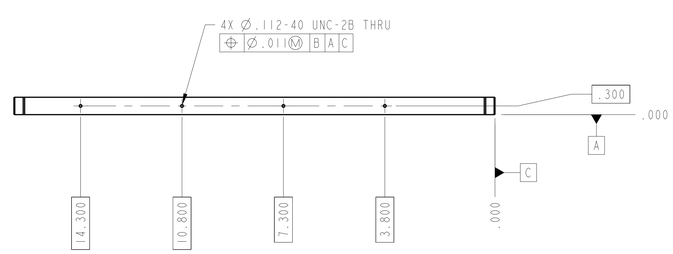

CHG	ZONE	DESCRIPTION	APP/DATE
B	E5	24X WAS 26X	RSC 07/14/14
A	C6	ADDED 15.800 BASIC DIM	RSC 06/30/14

REVISIONS

PRIOR TO USE VERIFY THE INTENDED PURPOSE IN PDM ("FOR" ATTRIBUTE)

UNLESS OTHERWISE SPECIFIED DIMENSIONS ARE IN INCHES

CONTRACT
CONTRACTOR
TASK ORDER

TOLERANCE ON			
.X	± 0.03	DRAFTER	DEZ/CLAPPER
.XX	± 0.01	ENGINEER	DES/TRIMARCHI
.XXX	± 0.005	DESIGNER	DEZ/CLAPPER
FRACTION	± -	DIMENSIONING AND TOLERANCING PER ASME Y14.5M-1994	
ANGULAR	± 0.50°		
BREAK EDGES	.01-.02		

PDM REL LEVEL: **Released** PDM REVISION: **B**

PDM DATABASE: **140202_HP-120V_PPU**
MODEL NAME: **140202_MCM_PCB_BRKT**

CHECK FOR ANY OUTSTANDING ECO'S PRIOR TO USE

NATIONAL AERONAUTICS AND SPACE ADMINISTRATION
JOHN H. GLENN RESEARCH CENTER
LEWIS FIELD
CLEVELAND, OHIO

MCM CHASSIS ASSEMBLY

140202MRA071

A073 MCM PCB BRACKET

SIZE	DRAWING NUMBER	REV	BLDG	AREA
E	140202MRA073	B	301	-
			UNITS: INCH	
SCALE: 1/2	INITIAL REL DATE 05/23/2014	SHEET 1 OF 1	DISCIPLINE MECHANICAL	

PROFE VERSION:

SIZE E DRAWING NUMBER 140202MRA073 REV B

NAME:CRESDONG OBJECT:140202_MCM_PCB_BRKT DATE:14-Apr-15 07:34:07

1. MATERIAL: 6061-T6 ALUMINUM SHEET (16ga.)

2. 125Ra ALL MACHINED SURFACES.

3. ELECTROCHEMICAL ETCH DRAWING PART NUMBER 140202MRA074 ON SPECIFIED SURFACE, PER SAE-AS478, METHOD 7A, OR OPTIONAL METHOD: LASER ETCH DRAWING PART NUMBER 140202MRA074 ON SPECIFIED SURFACE, PER SAE-AS478, METHOD 15B1. (SHALLOW ENGRAVE 0.0001-0.0006 DEEP). (ZONE C4).

4. THE NASA UNDERSTANDS AND DESIRES THAT THE Ø.128 -.134 THRU HOLE WILL BE ELIMINATED DURING THE FABRICATION OF THE COUNTER-SUNK FEATURE. THUS NO INSPECTION OF THE THRU HOLE IS REQUIRED, NOR IS IT EVEN POSSIBLE (SEE ZONE C6).

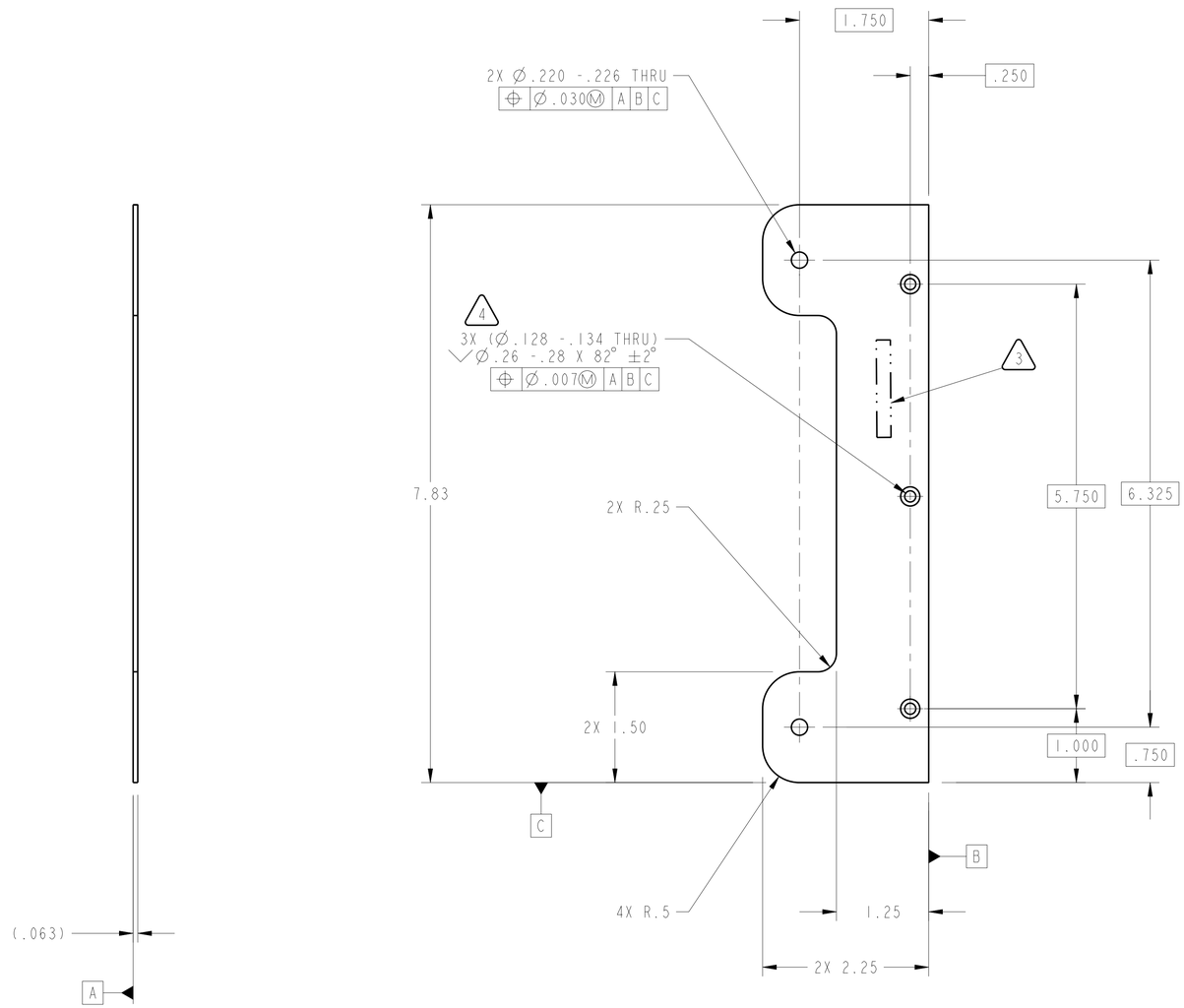

CHG	ZONE	DESCRIPTION	APP/DATE
A	D1	ADDED FLAG NOTE 4	RSC 06/23/14
	C6	3X (Ø.128-.134 THRU) Ø.26-.28 X 82° ±2° WAS 3X Ø.128-.134 THRU Ø.26-.27 X 82°	

REVISIONS

PRIOR TO USE VERIFY THE INTENDED PURPOSE IN PDM ("FOR" ATTRIBUTE)

UNLESS OTHERWISE SPECIFIED DIMENSIONS ARE IN INCHES

CONTRACT

CONTRACTOR

TOLERANCE ON		TASK ORDER	
.X	± 0.03	DRAFTER	DEZ/ CUTLIP
.XX	± 0.01	ENGINEER	DES/ TRIMARCHI
.XXX	± 0.005	DESIGNER	DEZ/ CLAPPER
FRACTION	± -	DIMENSIONING AND TOLERANCING PER ASME Y14.5M-1994	
ANGULAR	± 0.50°		
BREAK EDGES	.01-.02		

PDM REL LEVEL: Released PDM REVISION: A

PDM DATABASE: 140202_HP-120V_PPU

MODEL NAME: 140202_MCM_FRONT_ATTACH_PLT

CHECK FOR ANY OUTSTANDING ECO'S PRIOR TO USE

NATIONAL AERONAUTICS AND SPACE ADMINISTRATION
JOHN H. GLENN RESEARCH CENTER
LEWIS FIELD
CLEVELAND, OHIO

MCM CHASSIS ASSEMBLY

140202MRA071

A074 MCM FRONT ATTACHMENT PLATE

SIZE	DRAWING NUMBER	REV	BLDG	AREA
D	140202MRA074	A	301	-

UNITS: INCH

SCALE:	INITIAL REL DATE	SHEET	DISCIPLINE
1/1	05/23/2014	1 OF 1	MECHANICAL

PRO/E VERSION: Wildfire 5.0

SIZE D DRAWING NUMBER 140202MRA074 REV A

NAME:CREDDING OBJECT:140202_MCM_FRONT_ATTACH_PLT DATE:14-Apr-15 07:35:32

1. MATERIAL: 6061-T6 ALUMINUM SHEET (16ga.)

2. 125 Ra ALL MACHINED SURFACES.

3. ELECTROCHEMICAL ETCH DRAWING PART NUMBER 140202MRA075 ON SPECIFIED SURFACE, PER SAE-AS478, METHOD 7A, OR OPTIONAL METHOD LASER ETCH DRAWING PART NUMBER 140202MRA075 ON SPECIFIED SURFACE, PER SAE-AS478, METHOD 15B1. (SHALLOW ENGRAVE 0.0001-0.0006 DEEP). (ZONE C7).

4. THE NASA UNDERSTANDS AND DESIRES THAT THE Ø.128 -.134 THRU HOLE WILL BE ELIMINATED DURING THE FABRICATION OF THE COUNTER-SUNK FEATURE. THUS NO INSPECTION OF THE THRU HOLE IS REQUIRED, NOR IS IT EVEN POSSIBLE (SEE ZONE C7).

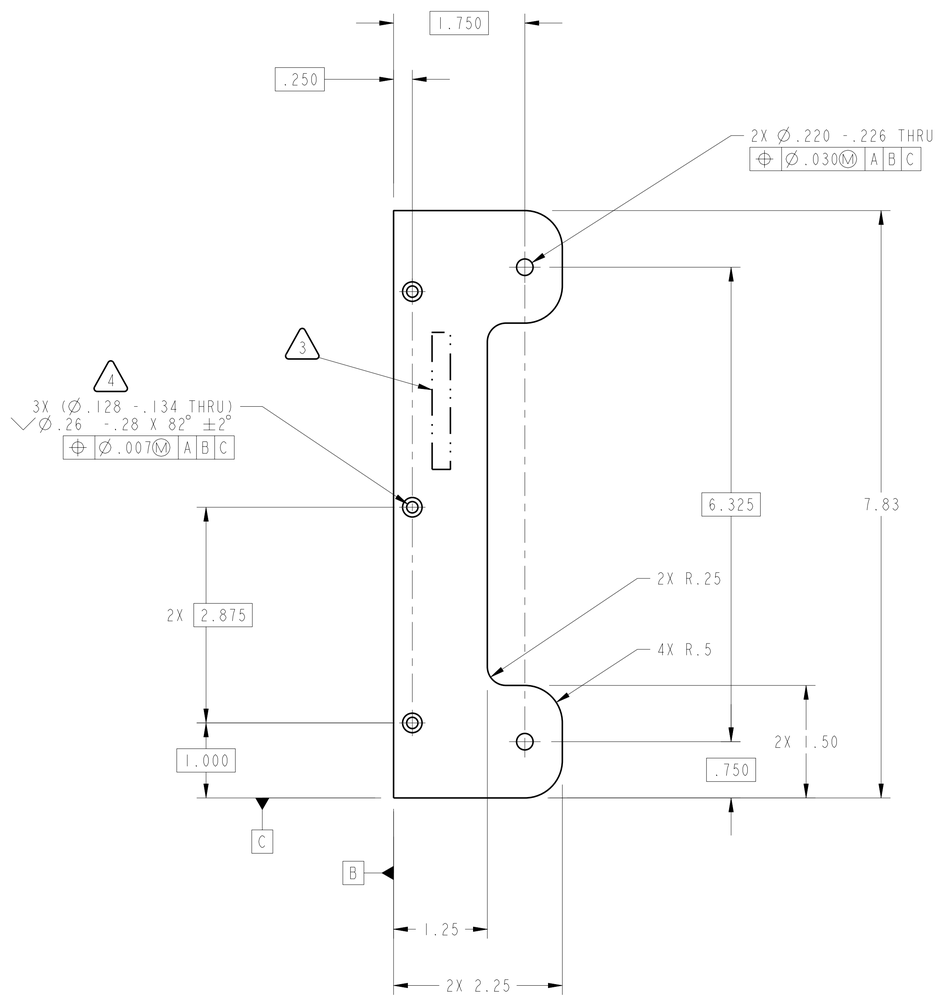

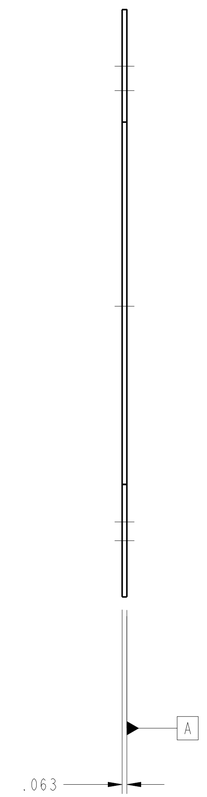

CHG	ZONE	DESCRIPTION	APP/DATE
A	D1	ADDED FLAG NOTE 4	RSC 06/23/14
	C7	3X (Ø.128-.134 THRU) ⌵Ø.26-.28 X 82° X ±2° WAS 3X Ø.128-.134 THRU ⌵ Ø.26-.27	

REVISIONS

PRIOR TO USE VERIFY THE INTENDED PURPOSE IN PDM ("FOR" ATTRIBUTE)

UNLESS OTHERWISE SPECIFIED DIMENSIONS ARE IN INCHES

CONTRACT

CONTRACTOR

TOLERANCE ON		TASK ORDER	
X	± 0.03	DRAFTER	DEZ/ CLAPPER
.XX	± 0.01	ENGINEER	DES/ TRIMARCHI
.XXX	± 0.005	DESIGNER	DEZ/ CLAPPER
FRACTION	± -	DIMENSIONING AND TOLERANCING PER ASME Y14.5M-1994	
ANGULAR	± 0.50°		
BREAK EDGES	.01 - .02		

PDM REL LEVEL: **Released** PDM REVISION: **A**

PDM DATABASE: **140202_HP-120V_PPU**

MODEL NAME: **140202_MCM_REAR_ATTACH_PLT**

CHECK FOR ANY OUTSTANDING ECO'S PRIOR TO USE

NATIONAL AERONAUTICS AND SPACE ADMINISTRATION
JOHN H. GLENN RESEARCH CENTER
LEWIS FIELD
CLEVELAND, OHIO

MCM CHASSIS ASSEMBLY

140202MRA071

A075 MCM REAR ATTACHMENT PLATE

SIZE	DRAWING NUMBER	REV	BLDG	AREA
D	140202MRA075	A	301	-

UNITS: INCH

SCALE:	INITIAL REL DATE	SHEET	DISCIPLINE
1/1	05/23/2014	1 OF 1	MECHANICAL

PRO/E VERSION: Wildfire 5.0

SIZE D DRAWING NUMBER 140202MRA075 REV A

NAME:CREDDING OBJECT:140202_MCM_REAR_ATTACH_PLT DATE:14-Apr-15 07:38:47

DRAWING LIST

DRAWING NUMBER: DRAWING CODE	DRAWING NUMBER: BALLOON NO	DESCRIPTION	QTY/ ASSY
140202MRA080		SYSTEM CONTROL MODULE	1
140202MRA081		SCM CHASSIS ASSEMBLY	1

ELECTRICAL DRAWING LIST

DRAWING NUMBER: DRAWING CODE	DRAWING NUMBER: BALLOON NO	DESCRIPTION	QTY/ ASSY
HP120VEBS107		SYNC GENERATOR	1
HP120VEBS108		GATE DRIVER POWER SUPPLY	1

COMMERCIAL PARTS LIST

BALLOON NO	DESCRIPTION	QTY/ ASSY
1	D-CONNECTOR, 104-PINS, AMP PART NUMBER 204522 (OR EQUIVALENT).	1
2	D-CONNECTOR, 37-PIN, ITT CANNON PART NUMBER DCMA-37P (OR EQUIVALENT).	1
3	HEX M/F STANDOFF, ALUMINUM, CLEAR IRIDITE. DIGI-KEY PART NUMBER 8413K-ND (OR EQUIVALENT).	8
4	.112-40 UNC-2A X .250 LONG, MALE/FEMALE HEX STANDOFF. STAINLESS STEEL. USE KEYSTONE ELECTRONICS PART #8712 OR EQUIVALENT.	4
5	.138-32 UNC-3A X .250 LONG, HEX SOCKET HEAD CAP SCREW, 316 STAINLESS STEEL, MCMASTER CARR PART #92815A144 OR EQUIVALENT.	8

TORQUE VALUES (DRY)

NO.	TIGHTENING TORQUE
C3	SNUG + 1/4 TURN
C4	68-72 IN-OZ
C5	127-133 IN-OZ

1. ASSEMBLE COMPONENTS AS SHOWN.
2. TIGHTEN FASTENERS TO WITHIN VALUES INDICATED IN TORQUE CHART.

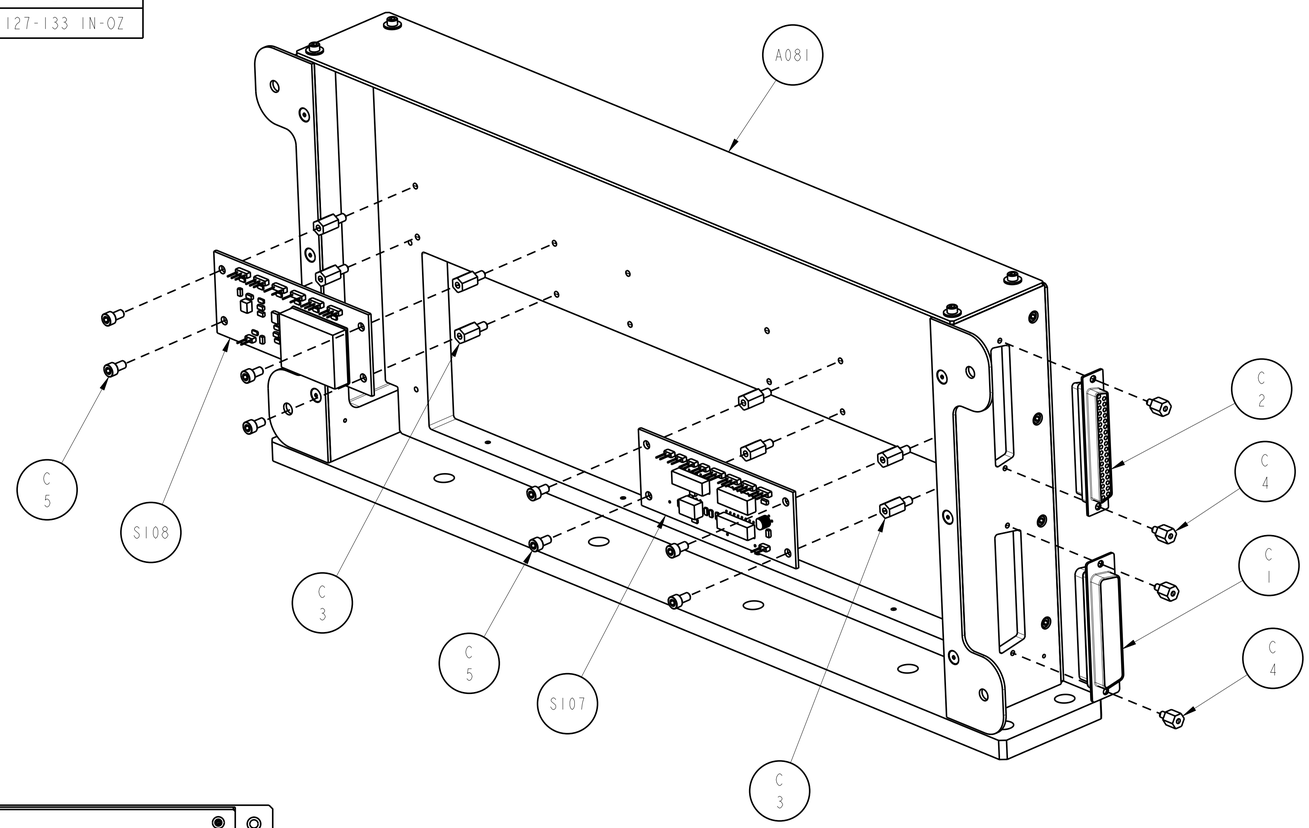

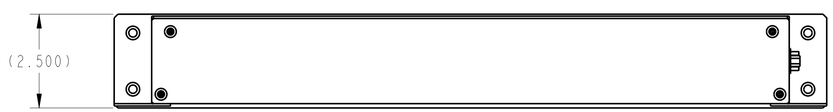

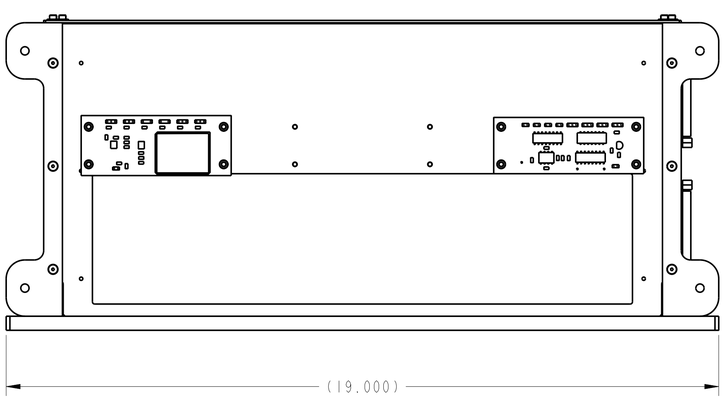

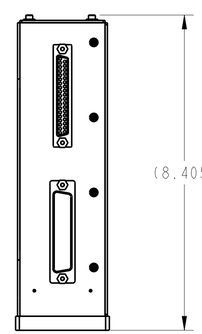

????	SINGLE PART DRAWING
????-?	CHARTED PART DRAWING
C ?	COMMERCIAL PART
E ?	EXISTING PART

PRIOR TO USE VERIFY THE INTENDED PURPOSE IN PDM ("FOR" ATTRIBUTE)

UNLESS OTHERWISE SPECIFIED DIMENSIONS ARE IN INCHES

TOLERANCE ON	
.X	± 0.03
.XX	± 0.01
.XXX	± 0.005
FRACTION	± -
ANGULAR	± 0.50°
BREAK EDGES	-

CONTRACT	
CONTRACTOR	
TASK ORDER	
DRAFTER	LMP/C. REDDING
ENGINEER	LEM/BIRCHENOUGH
DESIGNER	LMP/CLAPPER

DIMENSIONING AND TOLERANCING PER ASME Y14.5M-1994

PDM REL LEVEL: Released PDM REVISION: -

PDM DATABASE: 140202_HP-120V_PPU

MODEL NAME: 140202MRA080_SCM_MOD_ASM

CHECK FOR ANY OUTSTANDING ECO'S PRIOR TO USE

CHG	ZONE	DESCRIPTION	APP/DATE

REVISIONS

NATIONAL AERONAUTICS AND SPACE ADMINISTRATION
JOHN H. GLENN RESEARCH CENTER
LEWIS FIELD
CLEVELAND, OHIO

HP-120V HALL PPU ASSEMBLY

140202MRA000

A080 SYSTEM CONTROL MODULE

SIZE	DRAWING NUMBER	REV	BLDG	AREA
D	140202MRA080	-	301	-

UNITS: INCH

SCALE:	INITIAL REL DATE	SHEET	DISCIPLINE
1/2	04/15/2015	1 OF 1	MECHANICAL

PRO/E VERSION: Wildfire 5.0

SIZE D DRAWING NUMBER 140202MRA080 REV -

NAME:CREDDING OBJECT:140202MRA080_SCM_MOD_ASM DATE:16-Apr-15 10:31:04

1. MATERIAL: 6061-T6 ALUMINUM.

2. 63 Ra ALL OVER UNLESS OTHERWISE NOTED.

3. ELECTROCHEMICAL ETCH DRAWING PART NUMBER 140202MRA083 ON SPECIFIED SURFACE, PER SAE-AS478, METHOD 7A, OR OPTIONAL METHOD: LASER ETCH DRAWING PART NUMBER 140202MRA083 ON SPECIFIED SURFACE PER SAE-AS478, METHOD 15B1. (SHALLOW ENGRAVE 0.0001-0.0006 DEEP). (ZONE G5).

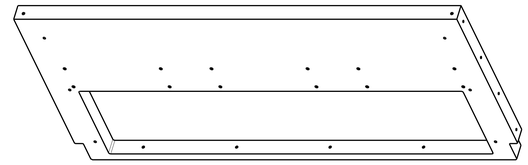

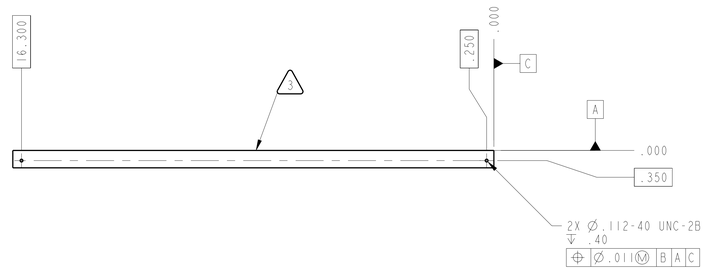

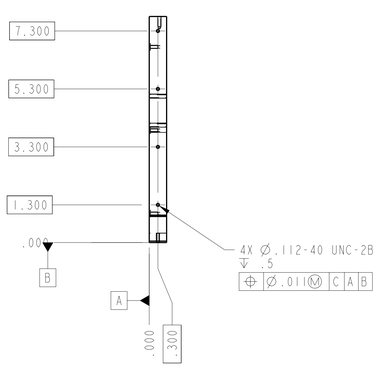

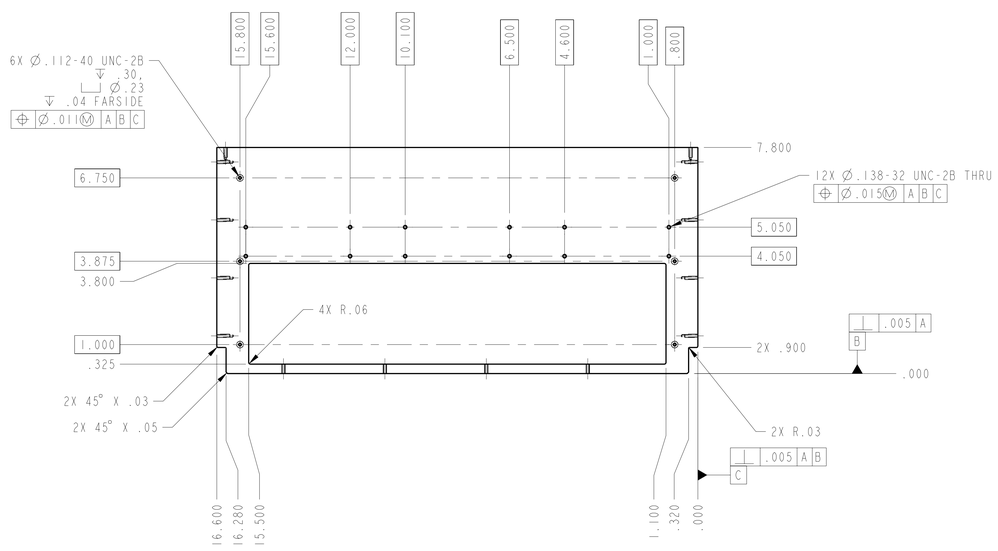

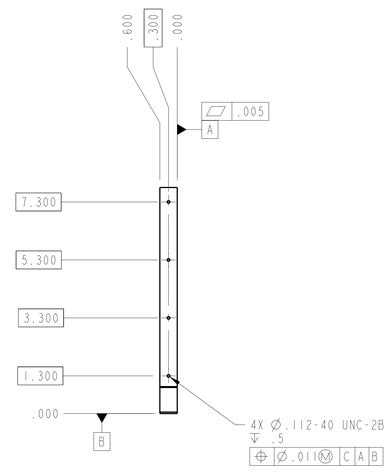

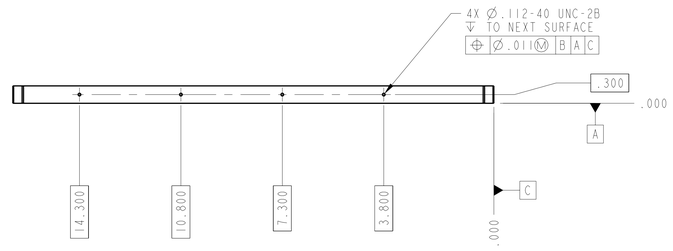

CHG	ZONE	DESCRIPTION	APP/DATE
A	E6	ADDED ↧ .03, ⌴ Ø.23, ↧ .04 FARSIDE 6X Ø.112-40 UNC-2B WAS 6X Ø.112-40 UNC-2B THRU	RSC 09/05/14
	D6	ADDED 3.800 DIMENSION	
		ADDED .325 DIMENSION	
	C6	ADDED 15.500 DIMENSION	
	C5	ADDED 1.100 DIMENSION	
	D6	ADDED 4X R .06	
	D4	ADDED 12X Ø.138-32 UNC-2B THRU, WITH LOCATING BASIC DIMENSIONS	

REVISIONS

PRIOR TO USE VERIFY THE INTENDED PURPOSE IN PDM ("FOR" ATTRIBUTE)

UNLESS OTHERWISE SPECIFIED DIMENSIONS ARE IN INCHES

CONTRACT

CONTRACTOR

TOLERANCE ON		TASK ORDER	
.X	± 0.03	DRAFTER	DEZ/CLAPPER
.XX	± 0.01	ENGINEER	DES/TRIMARCHI
.XXX	± 0.005	DESIGNER	DEZ/CLAPPER
FRACTION	± -	DIMENSIONING AND TOLERANCING PER ASME Y14.5M-1994	
ANGULAR	± 0.50°		
BREAK EDGES	.01-.02		

PDM REL LEVEL: **Released** PDM REVISION: A

PDM DATABASE: 140202_HP-120V.PPU

MODEL NAME: 140202_SCM_PCB_BRKT

CHECK FOR ANY OUTSTANDING ECO'S PRIOR TO USE

NATIONAL AERONAUTICS AND SPACE ADMINISTRATION
JOHN H. GLENN RESEARCH CENTER
LEWIS FIELD
CLEVELAND, OHIO

SCM CHASSIS ASSEMBLY

140202MRA081 A

A083 SCM PCB BRACKET

SIZE	DRAWING NUMBER	REV	BLDG	AREA
E	140202MRA083	A	301	-

UNITS: INCH

SCALE:	INITIAL REL DATE	SHEET	DISCIPLINE
1/2	05/23/2014	1 OF 1	MECHANICAL

PRO/E VERSION:

SIZE E DRAWING NUMBER 140202MRA083 REV A

NAME:GREGORING OBJECT:140202_SCM_PCB_BRKT DATE:14-Apr-16 07:46:57

1. MATERIAL: 6061-T6 ALUMINUM SHEET (16ga.)

2. 125 Ra ALL MACHINED SURFACES.

3. ELECTROCHEMICAL ETCH DRAWING PART NUMBER 140202MRA084 ON SPECIFIED SURFACE, PER SAE-AS478, METHOD 7A, OR OPTIONAL METHOD: LASER ETCH DRAWING PART NUMBER 140202MRA084 ON SPECIFIED SURFACE, PER SAE-AS478, METHOD 15B1. (SHALLOW ENGRAVE 0.0001-0.0006 DEEP). (ZONE B3).

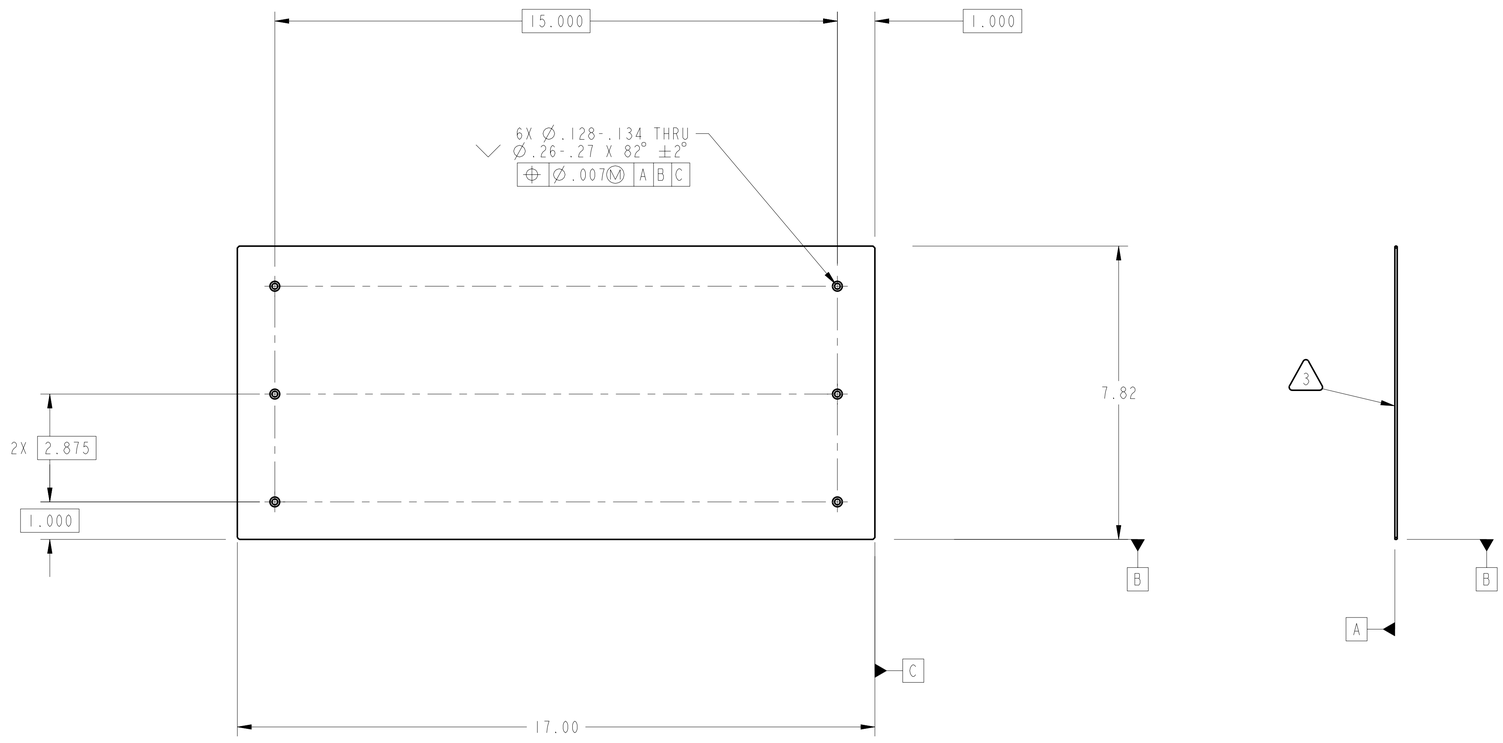

CHG	ZONE	DESCRIPTION	APP/DATE

REVISIONS

PRIOR TO USE VERIFY THE INTENDED PURPOSE IN PDM ("FOR" ATTRIBUTE)

UNLESS OTHERWISE SPECIFIED DIMENSIONS ARE IN INCHES

CONTRACT

CONTRACTOR

TOLERANCE ON		TASK ORDER	
.X	± 0.03	DRAFTER	DEZ/CLAPPER
.XX	± 0.01	ENGINEER	DES/TRIMARCHI
.XXX	± 0.005	DESIGNER	DEZ/CLAPPER
FRACTION	± -	DIMENSIONING AND TOLERANCING PER ASME Y14.5M-1994	
ANGULAR	± 0.50°		
BREAK EDGES	.01-.02		

PDM REL LEVEL: **Released** PDM REVISION: -

PDM DATABASE: 140202_HP-120V_PPU

MODEL NAME: 140202_SCM_SIMPLE_SIDE_COVER

CHECK FOR ANY OUTSTANDING ECO'S PRIOR TO USE

NATIONAL AERONAUTICS AND SPACE ADMINISTRATION
JOHN H. GLENN RESEARCH CENTER
LEWIS FIELD
CLEVELAND, OHIO

SCM CHASSIS ASSEMBLY

140202MRA081

A084 SCM SIDE COVER

SIZE	DRAWING NUMBER	REV	BLDG	AREA
D	140202MRA084	-	301	-

UNITS: INCH

SCALE:	INITIAL REL DATE	SHEET	DISCIPLINE
1/2	05/23/2014	1 OF 1	MECHANICAL

PRO/E VERSION: Wildfire 5.0

SIZE D DRAWING NUMBER 140202MRA084 REV -

NAME:CREDDING OBJECT:140202_SCM_SIMPLE_SIDE_COVER DATE:26-Mar-15 14:08:00

1. MATERIAL: 3/8" THICK, 6061-T6 ALUMINUM, TOOLING PLATE.

2. 125 Ra ALL MACHINED SURFACES.

3. SURFACE TREATMENT PER MIL-C-5541, CLASS 3. USE IRIDITE 14.2 OR REQUESTER APPROVED EQUAL PER MIL-DTL-81706, CLASS 3, FORM II, METHOD B OR C, AS APPLICABLE. SPOT TOUCH UP BY METHOD B.

4. IDENTIFY PART WITH DRAWING NUMBER 140202MRA085 ON SPECIFIED SURFACE BY EITHER:
   - ELECTROCHEMICAL ETCH PER SAE-AS478, METHOD 7A,
   OR
   - LASER ENGRAVE PER SAE-AS478, METHOD 15B1.
   LOCATE APPROX. AS SHOWN (ZONE F8).

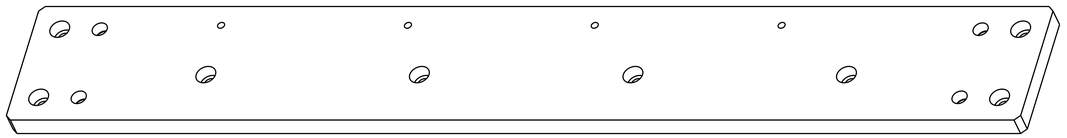

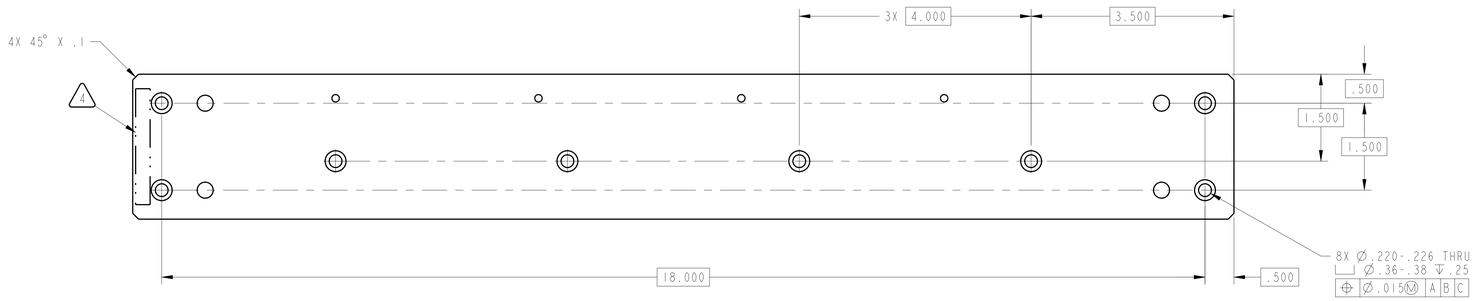

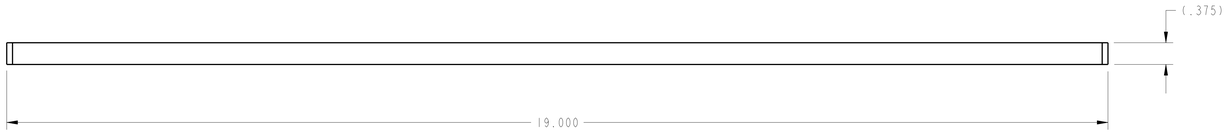

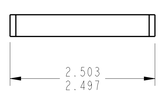

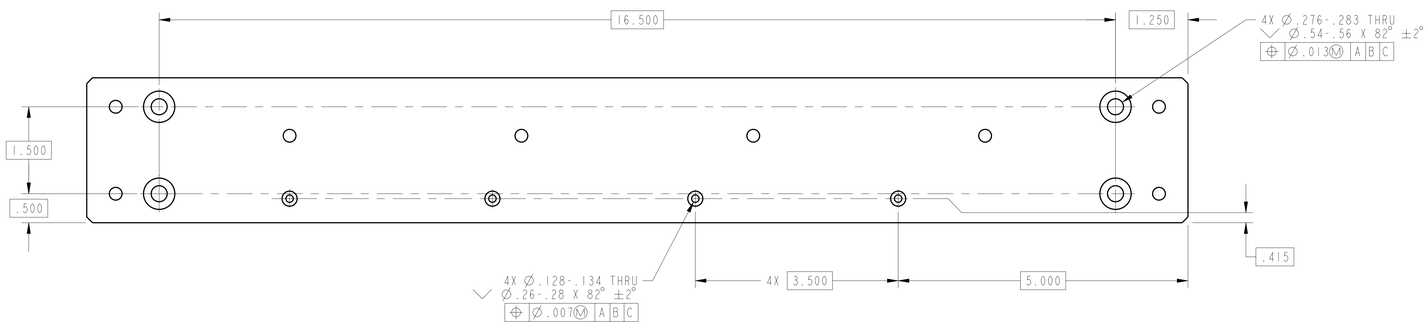

CHG	ZONE	DESCRIPTION	APP/DATE

REVISIONS

PRIOR TO USE VERIFY THE INTENDED PURPOSE IN PDM ("FOR" ATTRIBUTE)

UNLESS OTHERWISE SPECIFIED DIMENSIONS ARE IN INCHES

CONTRACT

CONTRACTOR

TASK ORDER

TOLERANCE ON			
.X	± 0.03	DRAFTER	DEZ/CLAPPER
.XX	± 0.01	ENGINEER	DES/TRIMARCHI
.XXX	± 0.005	DESIGNER	DEZ/CLAPPER
FRACTION	± -	DIMENSIONING AND TOLERANCING PER ASME Y14.5M-1994	
ANGULAR	± 0.50°		
BREAK EDGES	.01-.02		

NATIONAL AERONAUTICS AND SPACE ADMINISTRATION
JOHN H. GLENN RESEARCH CENTER
LEWIS FIELD
CLEVELAND, OHIO

SCM CHASSIS ASSEMBLY

140202MRA081 A

A085 SCM BASEPLATE

PDM REL LEVEL: **Released** PDM REVISION: -

PDM DATABASE: 140202_HP-120V_PPU

MODEL NAME: 140202MRA085_SCM_BASEPLATE

CHECK FOR ANY OUTSTANDING ECO'S PRIOR TO USE

SIZE	DRAWING NUMBER	REV	BLDG	AREA
E	140202MRA085	-	301	-

SCALE:	INITIAL REL DATE	SHEET	DISCIPLINE
1/1	04/15/2015	1 OF 1	MECHANICAL

UNITS: INCH

PRO/E VERSION: Wildfire 5.0

SIZE E DRAWING NUMBER 140202MRA085 REV -

NAME:ORDDONG OBJECT:140202MRA085_SCM_BASEPLATE DATE:16-Apr-15 9:28:06

1. MATERIAL: 6061-T6 ALUMINUM.

2. DRAWING DEVELOPED FROM TECHNICIAN FABRICATED PART. ACTUAL FEATURE DIMENSIONAL TOLERANCE UNKNOWN.

3. IDENTIFY BY BAGGING TAGGING WITH DRAWING NUMBER 140202MRA091, PER SAE-AS478, METHOD 35.

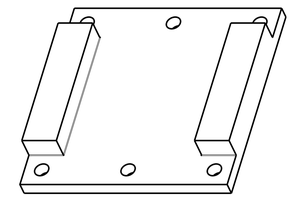

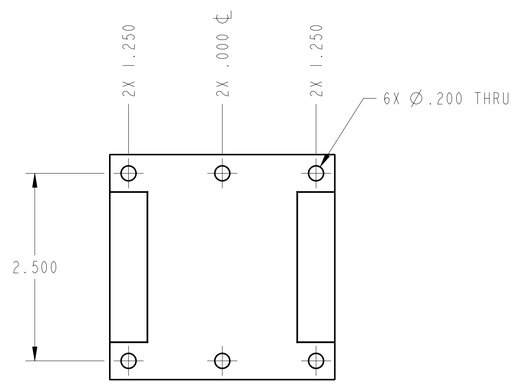

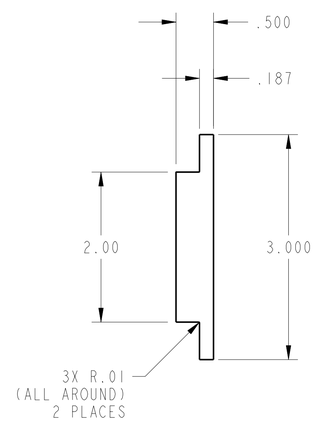

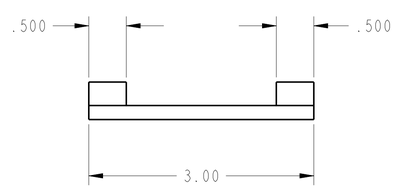

CHG	ZONE	DESCRIPTION	APP/DATE

REVISIONS

PRIOR TO USE VERIFY THE INTENDED PURPOSE IN PDM ("FOR" ATTRIBUTE)

UNLESS OTHERWISE SPECIFIED DIMENSIONS ARE IN INCHES

CONTRACT

CONTRACTOR

TOLERANCE ON		TASK ORDER	
.X	± 0.05	DRAFTER	LMP/C. REDDING
.XX	± 0.01	ENGINEER	LEM/BIRCHENOUGH
.XXX	± 0.005	DESIGNER	LEM/BIRCHENOUGH
FRACTION	± -	DIMENSIONING AND TOLERANCING PER ASME Y14.5M-1994	
ANGULAR	± 0.50°		
BREAK EDGES	.01-.03		

PDM REL LEVEL: Released PDM REVISION: -

PDM DATABASE: 140202_HP-120V_PPU

MODEL NAME: 140202MRA091_INDUCTOR_BASE

CHECK FOR ANY OUTSTANDING ECO'S PRIOR TO USE

NATIONAL AERONAUTICS AND SPACE ADMINISTRATION
JOHN H. GLENN RESEARCH CENTER
LEWIS FIELD
CLEVELAND, OHIO

SYSTEM DIFF INDUCTOR ASSEMBLY

140202MRA090

A091 SYSTEM DIFF INDUCTOR BASE

SIZE	DRAWING NUMBER	REV	BLDG	AREA
D	140202MRA091	-	301	-

UNITS: INCH

SCALE:	INITIAL REL DATE	SHEET	DISCIPLINE
1/1	04/16/2015	1 OF 1	MECHANICAL

PRO/E VERSION: Wildfire 5.0

SIZE D DRAWING NUMBER 140202MRA091 REV -

NAME:CREDDING OBJECT:140202MRA091_INDUCTOR_BASE DATE:16-Apr-15 10:42:33