Need to have proposal instructions, i.e., how many pages; what information does the vendor have to submit (but not limited to) that the end user wants to see, etc.

NASA Langley Research Center
"Centennial"
Traveling Exhibit

Summary

NASA Langley Research Center, Hampton, VA, is accepting proposals to design and build a traveling exhibit to commemorate the centennial of the base in 2017. The exhibit is meant to travel to NASA visitor centers, museums and NASA special events for a two-year period. NASA has existing hardware, exhibits and models that can be utilized for the display. Which is available upon source selection. An inventory of existing hardware can be provided and some elements are still being gathered.

Purpose and Guidelines

Purpose
The purpose of this traveling exhibit is to **inspire the family audience** about NASA Langley and its past 100 years of accomplishments. Aeronautic greats like Orville Wright, Leroy Grumman, Igor Sikorsky, John Northrop, Howard Hughes, Charles Lindbergh and Amelia Earhart helped to shape the early years at the National Advisory Committee on Aeronautics. The seven original American astronauts—Alan Shepard, Gus Grissom, John Glenn, Scott Carpenter, Wally Schirra, Gordon Cooper, and Deke Slayton—first trained at NASA Langley. Now NASA Langley is taking the next giant leap to the Moon and to Mars by providing extensive testing of the Orion capsule and the Space Launch System, slated for launch in 2018. **We want to have the next generation filled with excitement, ready to join NASA in making history, and enticed to join us for Centennial events throughout 2017!**

Guidelines
The exhibit shall be sized at 2500-3200 sq. ft., and be able to adapt to different venues as necessary. The exhibit will travel to NASA visitor centers and aerospace museums through 2016, and will be the highlight of various NASA Langley celebration activities and events planned for 2017. While venues are still being determined, it is expected that it will be displayed for a typical 3-month term at a location such as the NASA Langley Visitor Center, the Virginia Air and Space Center, Hampton, VA.

There are several themes/names being considered for the centennial, however a final selection won't be made until August 2015. This exhibit would need to be reflective and/or incorporate elements of that theme.

All crates should fit within one standard truck trailer, 52'6" length x 101" wide x 110" tall maximum. Prefer all crating be able to fit through standard double-doors. All crates should be labeled with ease of use for assembly.

Exhibit shall be designed to meet the ADA guidelines.

Final designs shall include existing NASA exhibit properties, new exhibit materials, purchase or construction of new cases (including labeling and detailed setup instructions and photos of booth elements (both paper/in crate and electronic instructions), audio/visual elements, tool kit, cleaning supplies (that are safely contained), dollies and crating as necessary, and final shipment cost to NASA Langley.

Final proposed design to include selected NASA color scheme (Red, White and Blue), theme and design boards, line item budget details, and walk-through instructions of setup from truck to show floor/install to dismantle. Traffic flow solutions, lighting and special effects, and visitor experience narrative should also be included.

Design drawings shall show optional layouts and configurations for setup in a variety of locations (museums, conference facilities, special event spaces.)

Available Resources

NASA has a wide range of high-resolution photos and video content that can be provided and created specifically for this exhibit using NASA graphics and video personnel that can develop custom content via the Exhibits Manager. Vendor will produce graphics, refurbish models, create and exhibits in-house.

NASA Langley Exhibits program has an existing 30 ft. exhibit, designed in 2002 that can be used/refurbished using any/all parts. Exhibit consists of Sentra panels with graphics, metal grids and areas for banners, small model display stands and pedestal bases. Frame is 10 ft. wide, 7 ft. tall with additional headers available and a 3 ft. standoff section.

Exhibit to be shipped in 3 – 5 crates, each measures 101" x 43" x 33", approximately 790 lbs. (Crates to be provided by NASA and remain the property of NASA.)

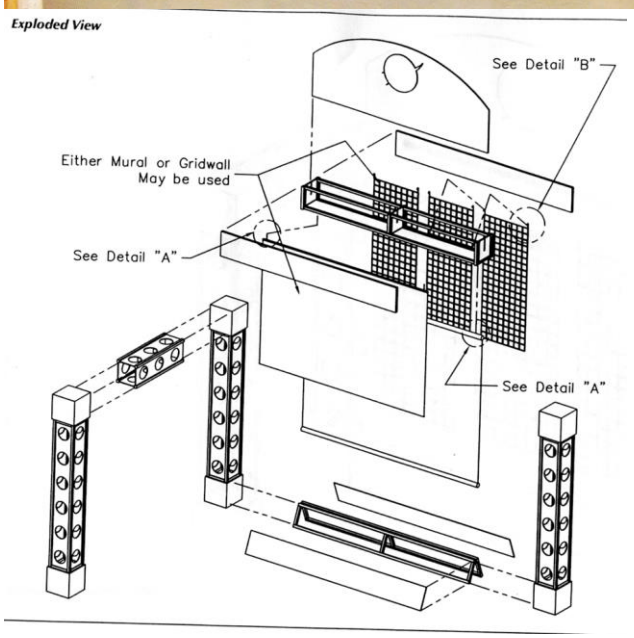

Sample configurations from past exhibits:

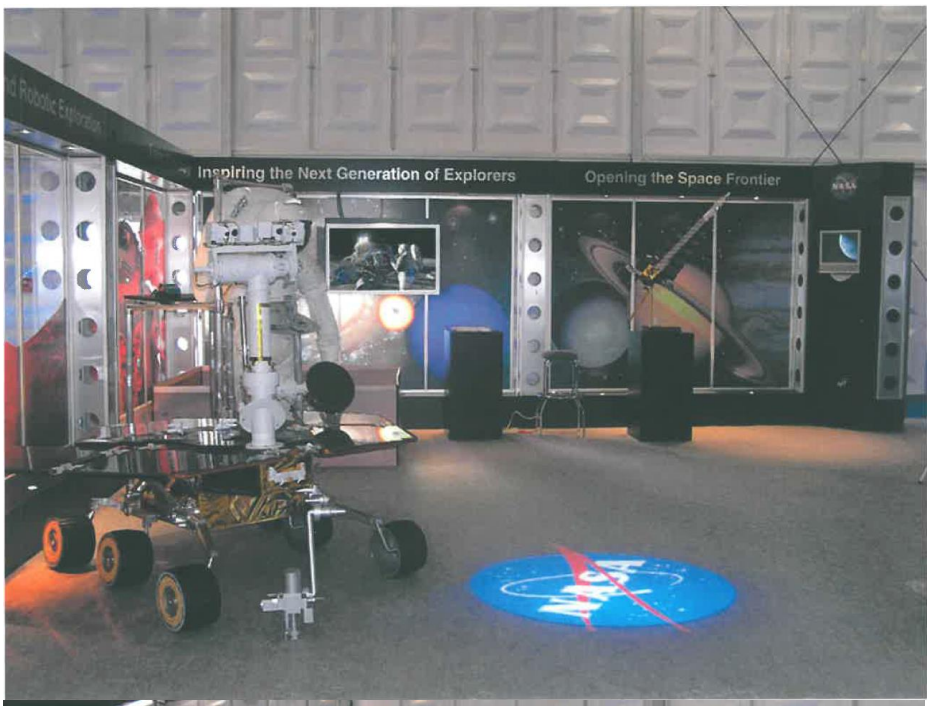

NASA materials like artifacts, test models, spacesuits, etc. can be provided where possible and, as theme requires.

NASA Langley has a storage facility, shipping and receiving facility, and exhibit technicians for setup and installation to provided by NASA.

Evaluation Criteria: Best Value (Technical Merit, Delivery and Past Performance:

The following criteria will form the basis upon which NASA will evaluate proposals.

• Visual aids--graphics, animation, storyboards provided for evaluation.
• Clear communication on "100 Years," "NASA Langley Research Center" and the final theme of the centennial should be throughout the exhibit.
• Level of participation and interaction created for exhibit visitors. Artistic concepts should be innovative and bring a fresh, fun perspective to NASA. Content will highlight 100 years of innovations and discoveries from the two organizations—National Advisory Committee for Aeronautics (NACA) and National Air and Space Administration (NASA). This exhibit shall help to convey that excitement and avoid a dry timeline treatment of historical event. Instead of a timeline walk-through, major theming connections can be used between past and future. For example, use of imagery conveying splashdown/recovery of the Apollo capsule from the past, juxtaposed to the splashdown/recovery of Orion capsule in 2014. It shall be an invitation to design, build, fly and launch with NASA by showcasing some of the most iconic accomplishments as well as some unexpected human stories at NASA.
• Level of emotion and "cool factor" conveyed by exhibit. NASA wants to inspire visitors about the future of aerospace and provide a call to action in 2016 to join us for 2017 celebration events using social media or other connections.
• Exhibit details including line-item budget, materials, construction, estimated weight, expected refurbishment needs, and renderings provided.
• Expertise in design of interactive and inspirational exhibits for family audiences.
• Audio/visual/gaming should convey the bulk of themes, except where specific artifacts are on display that require text.
• Design that shows portability and cost-savings—weight savings in crate and case design, ease-of-setup for exhibits with limited number of exhibit technicians required, designs for durability, etc.
• Flexibility in working with a government agency/high level of commitment and interaction needed as artifacts and specific theming are still being identified.
•Vendor shall provide a final electronic copy proposed design to be reviewed by the NASA Project Exhibit Manager prior to source selection.

Delivery shall be: Ninety(90) Days after receipt of order