1. MATERIAL: 4340 STEEL PER SAE AMS 6414.
2. 125 Ra ALL MACHINED SURFACES UNLESS OTHERWISE NOTED.
3. METAL STAMP DRAWING PART NUMBER 999906MRA952 ON SPECIFIED SURFACE PER SAE AS478, METHOD 2A2 (ZONE C8).
4. BLACK OXIDE PER MIL-DTL-13924, CLASS 1 WITH OIL.
5. QTY.: (1) REQUIRED
6. ESTIMATED WEIGHT: 105 LBS.

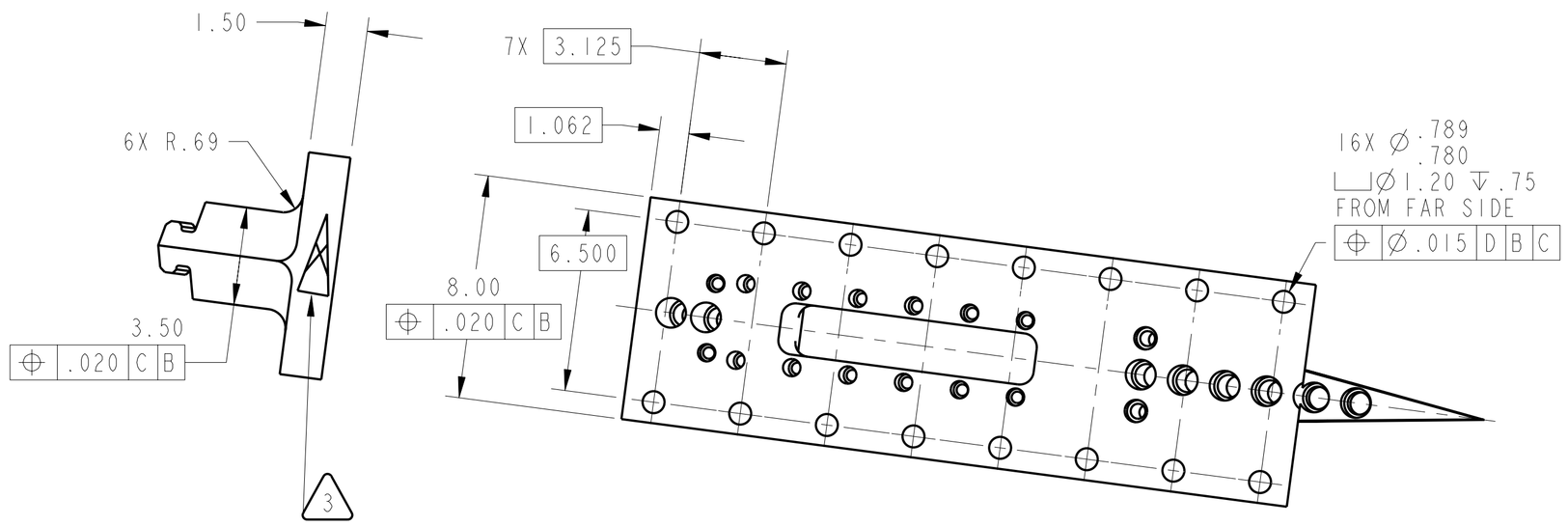

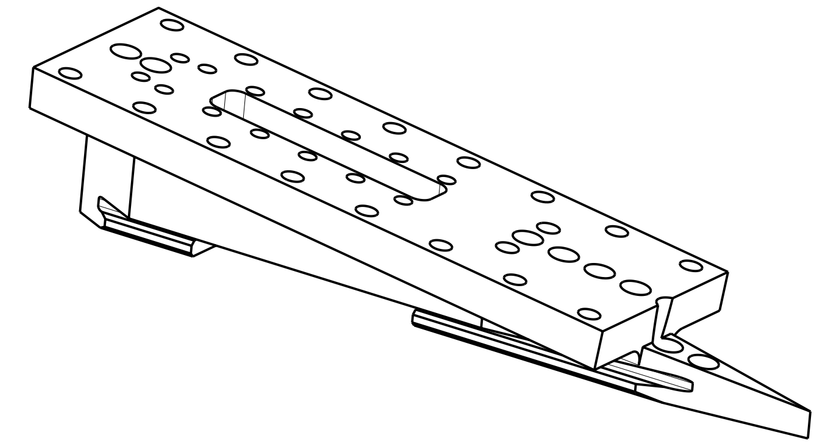

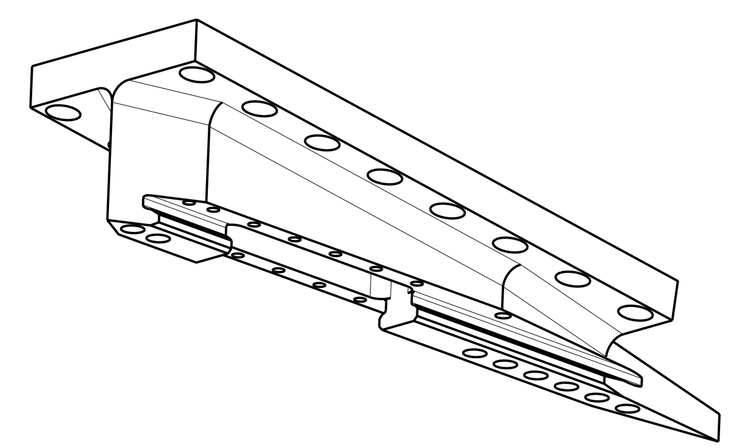

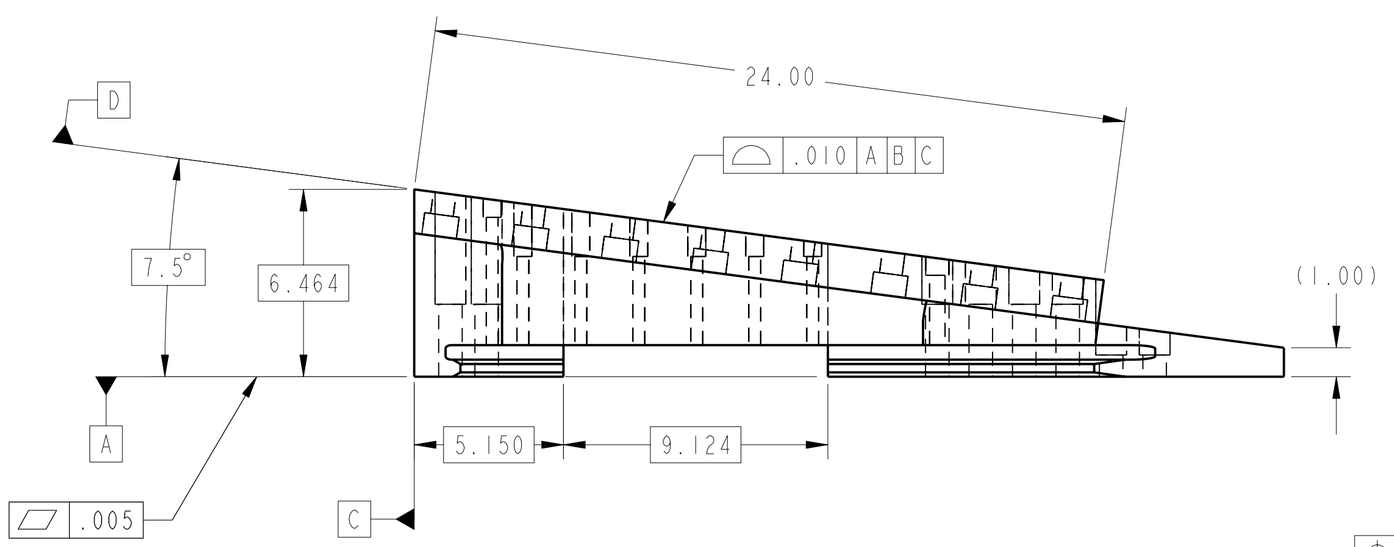

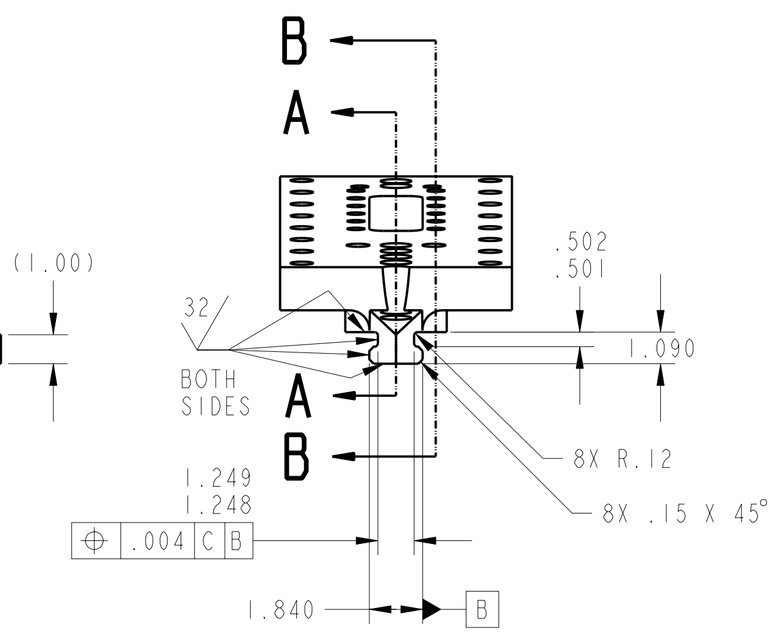

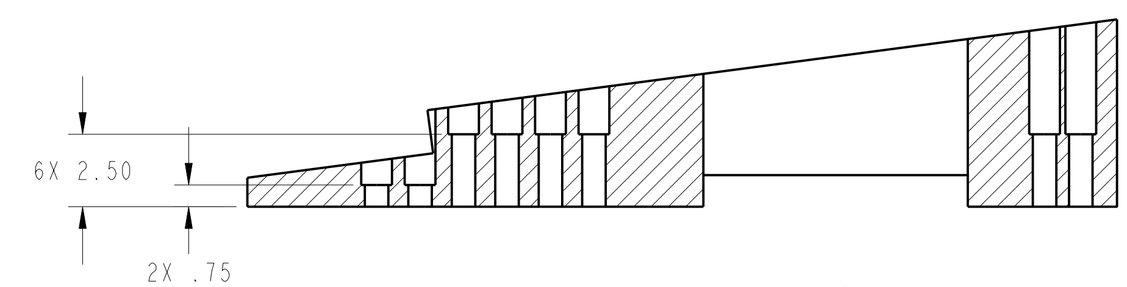

SECTION A-A

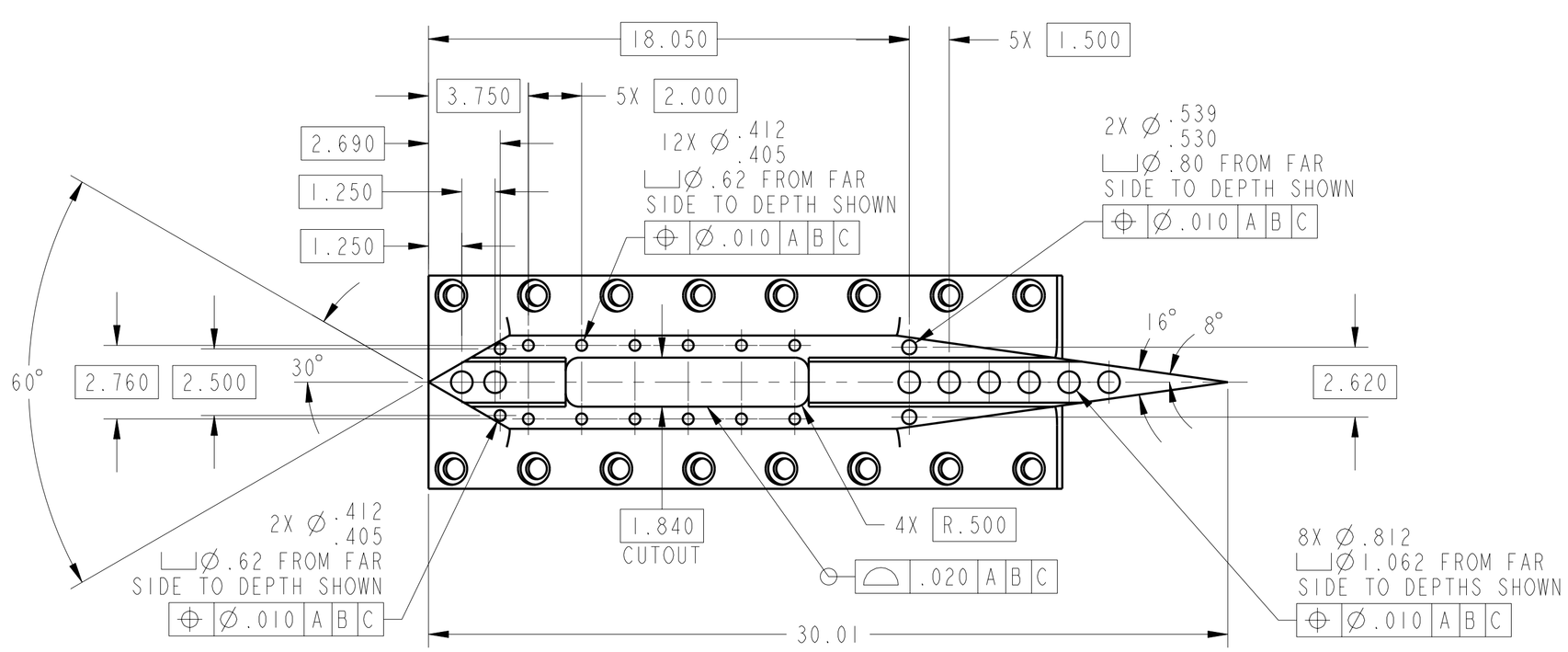

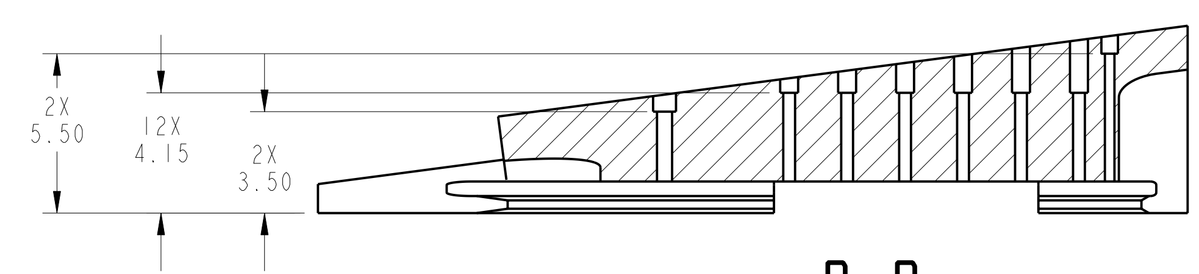

SECTION B-B

CHG	ZONE	DESCRIPTION	APP/DATE
A	D1	REVISED MATL FROM 280 MARAGING TO 4340 STEEL	PN 12/16/14

REVISIONS

PRIOR TO USE VERIFY THE INTENDED PURPOSE IN PDM ("FOR" ATTRIBUTE)

UNLESS OTHERWISE SPECIFIED DIMENSIONS ARE IN INCHES

CONTRACT NNC12BA01B
CONTRACTOR GESS3 TEAM
TASK ORDER 336

TOLERANCE ON			
.X	± 0.03	DRAFTER	VNTG/P. NEWMAN
.XX	± 0.01	ENGINEER	VNTG/P. NEWMAN
.XXX	± 0.005	DESIGNER	VNTG/P. NEWMAN
FRACTION	± -	DIMENSIONING AND TOLERANCING PER ASME Y14.5M-1994	
ANGULAR	± 0.50°		
BREAK EDGES	.010-.020		

NATIONAL AERONAUTICS AND SPACE ADMINISTRATION
JOHN H. GLENN RESEARCH CENTER
LEWIS FIELD
CLEVELAND, OHIO

STRUT ROLL MECHANISM
DIRECT MOUNT ASSEMBLY
TRANSONIC STRUT 999906MRA950

A952 STRUT ROLL MECHANISM
DIRECT MOUNT DOVETAIL
TRANSONIC STRUT

PDM REL LEVEL: Released PDM REVISION: A
PDM DATABASE: 999906_8x6_Facility_Database
MODEL NAME: 999906MRA952_DIR_MNT_DVTL_TRNS
CHECK FOR ANY OUTSTANDING ECO'S PRIOR TO USE

SIZE	DRAWING NUMBER	REV	BLDG	AREA
D	999906MRA952	A	55	8X6

UNITS: INCH

SCALE:	INITIAL REL DATE	SHEET	DISCIPLINE
1/4	XX/XX/XXXX	1 OF 1	MECHANICAL

PRO/E VERSION: Wildfire 5.0

SIZE D DRAWING NUMBER 999906MRA952 REV A

NAME:PANEWMAN OBJECT:999906MRA952_DIR_MNT_DVTL_TRNS DATE:30-Dec-14 10:27:55