SOLICITATION TERMS AND CONDITIONS

SOLICITATION: NNM15556131Q **FIRM FIXED PRICE (FFP)**	**CONTRACT ADMINISTRATOR:** **RENATTA AMERICA** renatta.r.america@nasa.gov **256-544-0229**

ALL CHECKED BOXES ARE APPLICABLE

I. DELIVERY AND PERFORMANCE REQUIREMENTS.

☒ ADDITIONAL ITEM DESCRIPTION, SPECIFICATION, OR STATEMENT OF WORK:
Statement of Work p. 18
Drawings p. 19-20

☒ CONFIRMATION OF VERBAL/E-MAIL/FAXED ORDER – DO NOT DUPLICATE

☐ THIS ORDER IS A RATED ORDER UNDER DPAS (15 CFR 700). THE RATING FOR THIS ORDER IS DO-C9

☒ DELIVERY DATE: ARO 09/08/2015

☐ PERIOD OF PERFORMANCE:

☒ NO PARTIAL PAYMENT/ DELIVERY ALLOWED. **DO NOT SUBMIT INVOICE UNTIL COMPLETION OF ORDER. ALL ITEMS TO BE SHIPPED AT THE SAME TIME ***

☐ PARTIAL DELIVERY/PAYMENT ACCEPTABLE.*

The contractor shall be paid upon acceptance of all Deliverables/Services described in the delivery schedule. Acceptance as used herein is defined as the successful completion of required tasks and deliverable for the period covered

II. INVOICING AND PAYMENT INFORMATION.

Invoices shall be submitted to:

NASA Shared Services Center (NSSC)
Financial Management Division (FMD) – Accounts Payable
Bldg 1111, C. Road
Stennis Space Center, MS 39529
Email: NSSC-AccountsPayable@nasa.gov
Fax: 866-209-5415
Fed Tax Exempt #: 63-0422638

III. APPLICABLE COMMERCIAL ITEM SOLICITATION CLAUSES:

This order is for a commercial item subject to the terms and conditions of FAR 52.212-4, Contract Terms and Conditions – Commercial Items (Dec 2014), incorporated by reference; FAR 52.212-5, Contract Terms and Conditions Required to Implement Statutes and Executive Orders, Commercial Items (May 2015) attached to this order; and any additional terms and conditions checked below or included as a Center specific requirements as addenda to 52.212-4.

52.252-2 CLAUSES INCORPORATED BY REFERENCE (OCT 2014).
This contract incorporates one or more clauses by reference, with the same force and effect as if they were given in full text. Upon request, the Contracting Officer will make their full text available. Also, the full text of a clause may be accessed electronically at this/these address(es): http://procurement.nasa.gov/far/

A. FEDERAL ACQUISITION REGULATION (48CFR CHAPTER 1) CLAUSES.

☒ 52.204-7 System for Award Management (Jul 2013)
☒ 52.204-13 System for Award Management Maintenance (Jul 2013)
☒ 52.212-1 Instructions to Offerors-Commercial Items (Apr 2014)
☒ 52.225-25 Prohibition on Contracting with Entities Engaging in Sanctioned Activities Relating to Iran—Representation and Certification. (Dec 2012)
☒ 52.232-39 Unenforceability of Unauthorized Obligations (Jun 2013)
☒ 52.247-34 F.O.B. Destination (Nov 1991)
☒ 1852.223-72 Safety and Health (SHORT FORM) (APR 2002)
☒ 1852.237-73 Release of Sensitive Information (JUNE 2005)

B. NASA FEDERAL ACQUISITION REGULATION SUPPLEMENT (48CFR CHAPTER 18) CLAUSES INCORPORATED BY REFERENCE.

☐ 1852.227-86 Commercial Computer Software-Licensing (Dec 1987)

C. NASA FEDERAL ACQUISITION REGULATION SUPPLEMENT (NFS) CLAUSES IN FULL TEXT AND APPLICABLE FEDERAL ACQUISITION REGULATION (FAR) CLAUSES IN FULL TEXT.

☒ 1852.209-73 REPRESENTATION BY OFFERORS THAT THEY ARE NOT THE ASSOCIATION OF COMMUNITY ORGANIZATIONS FOR REFORM NOW (ACORN) OR A SUBSIDIARY OF ACORN.(DEVIATION FEB 2012)

(a) In accordance with section 534 of The Consolidated and Further Continuing Appropriation Act of 2012 (Pub. L.112-55) none of the funds made available by the Act may be distributed to the Association of Community Organizations for Reform Now (ACORN) or its subsidiaries.
(b) The offeror represents, by submission of its offer, that it is not the Association of Community Organizations for Reform Now (ACORN) or a subsidiary thereof.

(End of provision)

☒ 1852.215-84 OMBUDSMAN (NOV 2011)

(a) An ombudsman has been appointed to hear and facilitate the resolution of concerns from offerors, potential offerors, and contractors during the preaward and postaward phases of this acquisition. When requested, the ombudsman will maintain strict confidentiality as to the source of the concern. The existence of the ombudsman is not to diminish the authority of the contracting officer, the Source Evaluation Board, or the selection official. Further, the ombudsman does not participate in the evaluation of proposals, the source selection process, or the adjudication of formal contract disputes. Therefore, before consulting with an ombudsman, interested parties must first address their concerns, issues, disagreements, and/or recommendations to the contracting officer for resolution.
(b) If resolution cannot be made by the contracting officer, interested parties may contact the installation ombudsman, whose name, address, telephone number, facsimile number, and e-mail address may be found at: http://prod.nais.nasa.gov/pub/pub_library/Omb.html. Concerns, issues, disagreements, and recommendations which cannot be resolved at the installation may be referred to the Agency ombudsman identified at the above URL. Please do not contact the ombudsman to request copies of the solicitation, verify offer due date, or clarify technical requirements. Such inquiries shall be directed to the Contracting Officer or as specified elsewhere in this document.

(End of Clause)

☒ 1852.216-78 FIRM FIXED PRICED (Dec 1988)

The total firm fixed price of this contract is $____To Be Determined_____

(End of Clause)

☒ **1852.225-70 EXPORT LICENSES (FEB 2000)**

(a) The Contractor shall comply with all U.S. export control laws and regulations, including the International Traffic in Arms Regulations (ITAR), 22 CFR Parts 120 through 130, and the Export Administration Regulations (EAR), 15 CFR Parts 730 through 799, in the performance of this contract. In the absence of available license exemptions/exceptions, the Contractor shall be responsible for obtaining the appropriate licenses or other approvals, if required, for exports of hardware, technical data, and software, or for the provision of technical assistance.

(b) The Contractor shall be responsible for obtaining export licenses, if required, before utilizing foreign persons in the performance of this contract, including instances where the work is to be performed on-site at Marshall Space Flight Center, where the foreign person will have access to export-controlled technical data or software.

(c) The Contractor shall be responsible for all regulatory record keeping requirements associated with the use of licenses and license exemptions/exceptions.

(d) The Contractor shall be responsible for ensuring that the provisions of this clause apply to its subcontractors.

(End of clause)

☒ **52.212-2 -- Evaluation -- Commercial Items.**

As prescribed in 12.301(c), the Contracting Officer may insert a provision substantially as follows:
Evaluation -- Commercial Items (Oct 2014)

(a) The Government will award a contract resulting from this solicitation to the responsible offeror whose offer conforming to the solicitation will be most advantageous to the Government, price and other factors considered. The following factors shall be used to evaluate offers:

1. Lowest Price

2. Technically Acceptable

(b) A written notice of award or acceptance of an offer, mailed or otherwise furnished to the successful offeror within the time for acceptance specified in the offer, shall result in a binding contract without further action by either party. Before the offer's specified expiration time, the Government may accept an offer (or part of an offer), whether or not there are negotiations after its receipt, unless a written notice of withdrawal is received before award.

(End of Provision)

☒ **52.212-3 Offeror Representations and Certifications—Commercial Items (Dec 2014) with its Alternate I (Mar 2015).**

An offeror shall complete only paragraph (b) of this provision if the offeror has completed the annual representations and certifications electronically via https://www.acquisition.gov. If an offeror has not completed the annual representations and certifications electronically at the ORCA website, the offeror shall complete only paragraphs (c) through (o) of this provision.

(a) *Definitions*. As used in this provision—

"Economically disadvantaged women-owned small business (EDWOSB) concern" means a small business concern that is at least 51 percent directly and unconditionally owned by, and the management and daily business operations of which are controlled by, one or more women who are citizens of the United States and who are economically disadvantaged in accordance with 13 CFR part 127. It automatically qualifies as a women-owned small business eligible under the WOSB Program.

"Forced or indentured child labor" means all work or service—

(1) Exacted from any person under the age of 18 under the menace of any penalty for its nonperformance and for which the worker does not offer himself voluntarily; or

(2) Performed by any person under the age of 18 pursuant to a contract the enforcement of which can be accomplished by process or penalties.

"Inverted domestic corporation", as used in this section, means a foreign incorporated entity which is treated as an inverted domestic corporation under 6 U.S.C. 395(b), i.e., a corporation that used to be incorporated in the United

States, or used to be a partnership in the United States, but now is incorporated in a foreign country, or is a subsidiary whose parent corporation is incorporated in a foreign country, that meets the criteria specified in 6 U.S.C. 395(b), applied in accordance with the rules and definitions of 6 U.S.C. 395(c). An inverted domestic corporation as herein defined does not meet the definition of an inverted domestic corporation as defined by the Internal Revenue Code at 26 U.S.C. 7874.

"Manufactured end product" means any end product in Federal Supply Classes (FSC) 1000-9999, except—

(1) FSC 5510, Lumber and Related Basic Wood Materials;

(2) Federal Supply Group (FSG) 87, Agricultural Supplies;

(3) FSG 88, Live Animals;

(4) FSG 89, Food and Related Consumables;

(5) FSC 9410, Crude Grades of Plant Materials;

(6) FSC 9430, Miscellaneous Crude Animal Products, Inedible;

(7) FSC 9440, Miscellaneous Crude Agricultural and Forestry Products;

(8) FSC 9610, Ores;

(9) FSC 9620, Minerals, Natural and Synthetic; and

(10) FSC 9630, Additive Metal Materials.

"Place of manufacture" means the place where an end product is assembled out of components, or otherwise made or processed from raw materials into the finished product that is to be provided to the Government. If a product is disassembled and reassembled, the place of reassembly is not the place of manufacture.

"Restricted business operations" means business operations in Sudan that include power production activities, mineral extraction activities, oil-related activities, or the production of military equipment, as those terms are defined in the Sudan Accountability and Divestment Act of 2007 (Pub. L. 110-174). Restricted business operations do not include business operations that the person (as that term is defined in Section 2 of the Sudan Accountability and Divestment Act of 2007) conducting the business can demonstrate—

(1) Are conducted under contract directly and exclusively with the regional government of southern Sudan;

(2) Are conducted pursuant to specific authorization from the Office of Foreign Assets Control in the Department of the Treasury, or are expressly exempted under Federal law from the requirement to be conducted under such authorization;

(3) Consist of providing goods or services to marginalized populations of Sudan;

(4) Consist of providing goods or services to an internationally recognized peacekeeping force or humanitarian organization;

(5) Consist of providing goods or services that are used only to promote health or education; or

(6) Have been voluntarily suspended.

"Sensitive technology"—

(1) Means hardware, software, telecommunications equipment, or any other technology that is to be used specifically—

(i) To restrict the free flow of unbiased information in Iran; or

(ii) To disrupt, monitor, or otherwise restrict speech of the people of Iran; and

(2) Does not include information or informational materials the export of which the President does not have the authority to regulate or prohibit pursuant to section 203(b)(3) of the International Emergency Economic Powers Act (50 U.S.C. 1702(b)(3)).

"Service-disabled veteran-owned small business concern"—

(1) Means a small business concern—

(i) Not less than 51 percent of which is owned by one or more service-disabled veterans or, in the case of any publicly owned business, not less than 51 percent of the stock of which is owned by one or more service-disabled veterans; and

(ii) The management and daily business operations of which are controlled by one or more service-disabled veterans or, in the case of a service-disabled veteran with permanent and severe disability, the spouse or permanent caregiver of such veteran.

(2) Service-disabled veteran means a veteran, as defined in 38 U.S.C. 101(2), with a disability that is service-connected, as defined in 38 U.S.C. 101(16).

"Small business concern" means a concern, including its affiliates, that is independently owned and operated, not dominant in the field of operation in which it is bidding on Government contracts, and qualified as a small business under the criteria in 13 CFR Part 121 and size standards in this solicitation.

"Subsidiary" means an entity in which more than 50 percent of the entity is owned—

(1) Directly by a parent corporation; or

(2) Through another subsidiary of a parent corporation.

"Veteran-owned small business concern" means a small business concern—

(1) Not less than 51 percent of which is owned by one or more veterans (as defined at 38 U.S.C. 101(2)) or, in the case of any publicly owned business, not less than 51 percent of the stock of which is owned by one or more veterans; and

(2) The management and daily business operations of which are controlled by one or more veterans.

"Women-owned business concern" means a concern which is at least 51 percent owned by one or more women; or in the case of any publicly owned business, at least 51 percent of its stock is owned by one or more women; and whose management and daily business operations are controlled by one or more women.

"Women-owned small business concern" means a small business concern—

(1) That is at least 51 percent owned by one or more women; or, in the case of any publicly owned business, at least 51 percent of the stock of which is owned by one or more women; and

(2) Whose management and daily business operations are controlled by one or more women.

"Women-owned small business (WOSB) concern eligible under the WOSB Program" (in accordance with 13 CFR part 127), means a small business concern that is at least 51 percent directly and unconditionally owned by, and the management and daily business operations of which are controlled by, one or more women who are citizens of the United States.

(b)

(1) Annual Representations and Certifications. Any changes provided by the offeror in paragraph (b) (2) of this provision do not automatically change the representations and certifications posted on the Online Representations and Certifications Application (ORCA) website.

(2) The offeror has completed the annual representations and certifications electronically via the ORCA website accessed through https://www.acquisition.gov. After reviewing the ORCA database information, the offeror verifies by submission of this offer that the representations and certifications currently posted electronically at FAR 52.212-3, Offeror Representations and Certifications—Commercial Items, have been entered or updated in the last 12 months, are current, accurate, complete, and applicable to this solicitation (including the business size standard applicable to the NAICS code referenced for this solicitation), as of the date of this offer and are incorporated in this offer by reference (see FAR 4.1201), except for paragraphs _____.

[Offeror to identify the applicable paragraphs at (c) through (o) of this provision that the offeror has completed for the purposes of this solicitation only, if any.

These amended representation(s) and/or certification(s) are also incorporated in this offer and are current, accurate, and complete as of the date of this offer.

Any changes provided by the offeror are applicable to this solicitation only, and do not result in an update to the representations and certifications posted electronically on ORCA.

(c) Offerors must complete the following representations when the resulting contract will be performed in the United States or its outlying areas. Check all that apply.

(1) Small business concern. The offeror represents as part of its offer that it ( ) is, ( ) is not a small business concern.

(2) Veteran-owned small business concern. [Complete only if the offeror represented itself as a small business concern in paragraph (c)(1) of this provision.] The offeror represents as part of its offer that it ( ) is, ( ) is not a veteran-owned small business concern.

(3) Service-disabled veteran-owned small business concern. [Complete only if the offeror represented itself as a veteran-owned small business concern in paragraph (c)(2) of this provision.] The offeror represents as part of its offer that it o is, o is not a service-disabled veteran-owned small business concern.

(4) Small disadvantaged business concern. [Complete only if the offeror represented itself as a small business concern in paragraph (c)(1) of this provision.] The offeror represents, for general statistical purposes, that it ( ) is, ( ) is not a small disadvantaged business concern as defined in 13 CFR 124.1002.

(5) Women-owned small business concern. [Complete only if the offeror represented itself as a small business concern in paragraph (c)(1) of this provision.] The offeror represents that it ( ) is, ( ) is not a women-owned small business concern.

(6) WOSB concern eligible under the WOSB Program. [Complete only if the offeror represented itself as a women-owned small business concern in paragraph (c)(5) of this provision.] The offeror represents that—

(i) It ( ) is,( ) is not a WOSB concern eligible under the WOSB Program, has provided all the required documents to the WOSB Repository, and no change in circumstances or adverse decisions have been issued that affects its eligibility; and

(ii) It ( ) is, ( ) is not a joint venture that complies with the requirements of 13 CFR part 127, and the representation in paragraph (c)(6)(i) of this provision is accurate for each WOSB concern eligible under the WOSB Program participating in the joint venture. [The offeror shall enter the name or names of the WOSB concern eligible under the WOSB Program and other small businesses that are participating in the joint venture: _____.] Each WOSB concern eligible under the WOSB Program participating in the joint venture shall submit a separate signed copy of the WOSB representation.

(7) Economically disadvantaged women-owned small business (EDWOSB) concern. [Complete only if the offeror represented itself as a WOSB concern eligible under the WOSB Program in (c)(6) of this provision.] The offeror represents that—

(i) It ( ) is, ( ) is not an EDWOSB concern, has provided all the required documents to the WOSB Repository, and no change in circumstances or adverse decisions have been issued that affects its eligibility; and

(ii) It ( ) is, ( ) is not a joint venture that complies with the requirements of 13 CFR part 127, and the representation in paragraph (c)(7)(i) of this provision is accurate for each EDWOSB concern participating in the joint venture. [The offeror shall enter the name or names of the EDWOSB concern and other small businesses that are participating in the joint venture: _____.] Each EDWOSB concern participating in the joint venture shall submit a separate signed copy of the EDWOSB representation.

Note: Complete paragraphs (c)(8) and (c)(9) only if this solicitation is expected to exceed the simplified acquisition threshold.

(8) Women-owned business concern (other than small business concern). [Complete only if the offeror is a women-owned business concern and did not represent itself as a small business concern in paragraph (c)(1) of this provision.] The offeror represents that it o is a women-owned business concern.

(9) Tie bid priority for labor surplus area concerns. If this is an invitation for bid, small business offerors may identify the labor surplus areas in which costs to be incurred on account of manufacturing or production (by offeror or first-tier subcontractors) amount to more than 50 percent of the contract price:_____

(10) [Complete only if the solicitation contains the clause at FAR 52.219-23, Notice of Price Evaluation Adjustment for Small Disadvantaged Business Concerns, or FAR 52.219-25, Small Disadvantaged Business Participation Program—Disadvantaged Status and Reporting, and the offeror desires a benefit based on its disadvantaged status.]

(i) General. The offeror represents that either—

(A) It ( ) is, ( ) is not certified by the Small Business Administration as a small disadvantaged business concern and identified, on the date of this representation, as a certified small disadvantaged business concern in the CCR Dynamic Small Business Search database maintained by the Small Business Administration, and that no material change in disadvantaged ownership and control has occurred since its certification, and, where the concern is owned by one or more individuals claiming disadvantaged status, the net worth of each individual upon whom the certification is based does not exceed $750,000 after taking into account the applicable exclusions set forth at 13 CFR 124.104(c)(2); or

(B) It ( ) has, ( ) has not submitted a completed application to the Small Business Administration or a Private Certifier to be certified as a small disadvantaged business concern in accordance with 13 CFR 124, Subpart B, and a decision on that application is pending, and that no material change in disadvantaged ownership and control has occurred since its application was submitted.

(ii) ( ) Joint Ventures under the Price Evaluation Adjustment for Small Disadvantaged Business Concerns. The offeror represents, as part of its offer, that it is a joint venture that complies with the requirements in 13 CFR 124.1002(f) and that the representation in paragraph (c)(10)(i) of this provision is accurate for the small

disadvantaged business concern that is participating in the joint venture. [The offeror shall enter the name of the small disadvantaged business concern that is participating in the joint venture: _____.]

(11) HUBZone small business concern. [Complete only if the offeror represented itself as a small business concern in paragraph (c)(1) of this provision.] The offeror represents, as part of its offer, that—

(i) It ( ) is, ( ) is not a HUBZone small business concern listed, on the date of this representation, on the List of Qualified HUBZone Small Business Concerns maintained by the Small Business Administration, and no material changes in ownership and control, principal office, or HUBZone employee percentage have occurred since it was certified in accordance with 13 CFR Part 126; and

(ii) It ( ) is, ( ) is not a HUBZone joint venture that complies with the requirements of 13 CFR Part 126, and the representation in paragraph (c)(11)(i) of this provision is accurate for each HUBZone small business concern participating in the HUBZone joint venture. [The offeror shall enter the names of each of the HUBZone small business concerns participating in the HUBZone joint venture: _____.] Each HUBZone small business concern participating in the HUBZone joint venture shall submit a separate signed copy of the HUBZone representation.

(d) Representations required to implement provisions of Executive Order 11246—

(1) Previous contracts and compliance. The offeror represents that—

(i) It ( ) has, ( ) has not participated in a previous contract or subcontract subject to the Equal Opportunity clause of this solicitation; and

(ii) It ( ) has, ( ) has not filed all required compliance reports.

(2) Affirmative Action Compliance. The offeror represents that—

(i) It ( ) has developed and has on file,( ) has not developed and does not have on file, at each establishment, affirmative action programs required by rules and regulations of the Secretary of Labor (41 cfr parts 60-1 and 60-2), or

(ii) It ( ) has not previously had contracts subject to the written affirmative action programs requirement of the rules and regulations of the Secretary of Labor.

(e) Certification Regarding Payments to Influence Federal Transactions (31 U.S.C. 1352). (Applies only if the contract is expected to exceed $150,000.) By submission of its offer, the offeror certifies to the best of its knowledge and belief that no Federal appropriated funds have been paid or will be paid to any person for influencing or attempting to influence an officer or employee of any agency, a Member of Congress, an officer or employee of Congress or an employee of a Member of Congress on his or her behalf in connection with the award of any resultant contract. If any registrants under the Lobbying Disclosure Act of 1995 have made a lobbying contact on behalf of the offeror with respect to this contract, the offeror shall complete and submit, with its offer, OMB Standard Form LLL, Disclosure of Lobbying Activities, to provide the name of the registrants. The offeror need not report regularly employed officers or employees of the offeror to whom payments of reasonable compensation were made.

(f) Buy American Act Certificate. (Applies only if the clause at Federal Acquisition Regulation (FAR) 52.225-1, Buy American Act—Supplies, is included in this solicitation.)

(1) The offeror certifies that each end product, except those listed in paragraph (f)(2) of this provision, is a domestic end product and that for other than COTS items, the offeror has considered components of unknown origin to have been mined, produced, or manufactured outside the United States. The offeror shall list as foreign end products those end products manufactured in the United States that do not qualify as domestic end products, i.e., an end product that is not a COTS item and does not meet the component test in paragraph (2) of the definition of "domestic end product." The terms "commercially available off-the-shelf (COTS) item" "component," "domestic end product," "end product," "foreign end product," and "United States" are defined in the clause of this solicitation entitled "Buy American Act—Supplies."

(2) Foreign End Products:

Line Item No.	Country of Origin
_____	_____
_____	_____
_____	_____

[List as necessary]

(3) The Government will evaluate offers in accordance with the policies and procedures of FAR Part 25.

(g)(1) Buy American Act—Free Trade Agreements—Israeli Trade Act Certificate. (Applies only if the clause at FAR 52.225-3, Buy American Act—Free Trade Agreements—Israeli Trade Act, is included in this solicitation.)

(i) The offeror certifies that each end product, except those listed in paragraph (g)(1)(ii) or (g)(1)(iii) of this provision, is a domestic end product and that for other than COTS items, the offeror has considered components of unknown origin to have been mined, produced, or manufactured outside the United States. The terms "Bahrainian, Moroccan, Omani, Panamanian, or Peruvian end product," "commercially available off-the-shelf (COTS) item," "component," "domestic end product," "end product," "foreign end product," "Free Trade Agreement country," "Free Trade Agreement country end product," "Israeli end product," and "United States" are defined in the clause of this solicitation entitled "Buy American Act—Free Trade Agreements–Israeli Trade Act."

(ii) The offeror certifies that the following supplies are Free Trade Agreement country end products (other than Bahrainian, Moroccan, Omani, Panamanian, or Peruvian end products) or Israeli end products as defined in the clause of this solicitation entitled "Buy American Act—Free Trade Agreements—Israeli Trade Act":

Line Item No.	Country of Origin

[List as necessary]

(iii) The offeror shall list those supplies that are foreign end products (other than those listed in paragraph (g)(1)(ii) of this provision) as defined in the clause of this solicitation entitled "Buy American Act—Free Trade Agreements—Israeli Trade Act." The offeror shall list as other foreign end products those end products manufactured in the United States that do not qualify as domestic end products, i.e., an end product that is not a COTS item and does not meet the component test in paragraph (2) of the definition of "domestic end product."

Other Foreign End Products:

Line Item No.	Country of Origin

[List as necessary]

(iv) The Government will evaluate offers in accordance with the policies and procedures of FAR Part 25.

(2) Buy American Act—Free Trade Agreements—Israeli Trade Act Certificate, Alternate I. If Alternate I to the clause at FAR 52.225-3 is included in this solicitation, substitute the following paragraph (g)(1)(ii) for paragraph (g)(1)(ii) of the basic provision:

(g)(1)(ii) The offeror certifies that the following supplies are Canadian end products as defined in the clause of this solicitation entitled "Buy American Act—Free Trade Agreements—Israeli Trade Act":

Canadian End Products:

Line Item No.

_____

_____

_____

[List as necessary]

(3) Buy American Act—Free Trade Agreements—Israeli Trade Act Certificate, Alternate II. If Alternate II to the clause at FAR 52.225-3 is included in this solicitation, substitute the following paragraph (g)(1)(ii) for paragraph (g)(1)(ii) of the basic provision:

(g)(1)(ii) The offeror certifies that the following supplies are Canadian end products or Israeli end products as defined in the clause of this solicitation entitled "Buy American Act—Free Trade Agreements—Israeli Trade Act":

Canadian or Israeli End Products: Line Item No. Country of Origin

_____ _____

_____ _____

_____ _____

[List as necessary]

(4) Buy American Act—Free Trade Agreements—Israeli Trade Act Certificate, Alternate III. If Alternate III to the clause at 52.225-3 is included in this solicitation, substitute the following paragraph (g)(1)(ii) for paragraph (g)(1)(ii) of the basic provision:

(g)(1)(ii) The offeror certifies that the following supplies are Free Trade Agreement country end products (other than Bahrainian, Korean, Moroccan, Omani, Panamanian, or Peruvian end products) or Israeli end products as defined in the clause of this solicitation entitled "Buy American Act-Free Trade Agreements-Israeli Trade Act":

Free Trade Agreement Country End Products (Other than Bahrainian, Korean, Moroccan, Omani, Panamanian, or Peruvian End Products) or Israeli End Products:

Line Item No. Country of Origin

_____ _____

_____ _____

_____ _____

[List as necessary]

(5) Trade Agreements Certificate. (Applies only if the clause at FAR 52.225-5, Trade Agreements, is included in this solicitation.)

(i) The offeror certifies that each end product, except those listed in paragraph (g)(5)(ii) of this provision, is a U.S.-made or designated country end product, as defined in the clause of this solicitation entitled "Trade Agreements."

(ii) The offeror shall list as other end products those end products that are not U.S.-made or designated country end products.

Other End Products:

Line Item No. Country of Origin

_____ _____

_____ _____

_____ _____

[List as necessary]

(iii) The Government will evaluate offers in accordance with the policies and procedures of FAR Part 25. For line items covered by the WTO GPA, the Government will evaluate offers of U.S.-made or designated country end products without regard to the restrictions of the Buy American Act. The Government will consider for award only offers of U.S.-made or designated country end products unless the Contracting Officer determines that there are no offers for such products or that the offers for such products are insufficient to fulfill the requirements of the solicitation.

(h) Certification Regarding Responsibility Matters (Executive Order 12689). (Applies only if the contract value is expected to exceed the simplified acquisition threshold.) The offeror certifies, to the best of its knowledge and belief, that the offeror and/or any of its principals—

(1) ( ) Are, ( ) are not presently debarred, suspended, proposed for debarment, or declared ineligible for the award of contracts by any Federal agency;

(2) ( ) Have, ( ) have not, within a three-year period preceding this offer, been convicted of or had a civil judgment rendered against them for: commission of fraud or a criminal offense in connection with obtaining, attempting to obtain, or performing a Federal, state or local government contract or subcontract; violation of Federal or state antitrust statutes relating to the submission of offers; or commission of embezzlement, theft, forgery, bribery, falsification or destruction of records, making false statements, tax evasion, violating Federal criminal tax laws, or receiving stolen property;

(3) ( ) Are, ( ) are not presently indicted for, or otherwise criminally or civilly charged by a Government entity with, commission of any of these offenses enumerated in paragraph (h)(2) of this clause; and

(4) ( ) Have, ( ) have not, within a three-year period preceding this offer, been notified of any delinquent Federal taxes in an amount that exceeds $3,000 for which the liability remains unsatisfied.

(i) Taxes are considered delinquent if both of the following criteria apply:

(A) The tax liability is finally determined. The liability is finally determined if it has been assessed. A liability is not finally determined if there is a pending administrative or judicial challenge. In the case of a judicial challenge to the liability, the liability is not finally determined until all judicial appeal rights have been exhausted.

(B) The taxpayer is delinquent in making payment. A taxpayer is delinquent if the taxpayer has failed to pay the tax liability when full payment was due and required. A taxpayer is not delinquent in cases where enforced collection action is precluded.

(ii) Examples.

(A) The taxpayer has received a statutory notice of deficiency, under I.R.C. §6212, which entitles the taxpayer to seek Tax Court review of a proposed tax deficiency. This is not a delinquent tax because it is not a final tax liability. Should the taxpayer seek Tax Court review, this will not be a final tax liability until the taxpayer has exercised all judicial appeal rights.

(B) The IRS has filed a notice of Federal tax lien with respect to an assessed tax liability, and the taxpayer has been issued a notice under I.R.C. §6320 entitling the taxpayer to request a hearing with the IRS Office of Appeals contesting the lien filing, and to further appeal to the Tax Court if the IRS determines to sustain the lien filing. In the course of the hearing, the taxpayer is entitled to contest the underlying tax liability because the taxpayer has had no prior opportunity to contest the liability. This is not a delinquent tax because it is not a final tax liability. Should the taxpayer seek tax court review, this will not be a final tax liability until the taxpayer has exercised all judicial appeal rights.

(C) The taxpayer has entered into an installment agreement pursuant to I.R.C. §6159. The taxpayer is making timely payments and is in full compliance with the agreement terms. The taxpayer is not delinquent because the taxpayer is not currently required to make full payment.

(D) The taxpayer has filed for bankruptcy protection. The taxpayer is not delinquent because enforced collection action is stayed under 11 U.S.C. §362 (the Bankruptcy Code).

(i) Certification Regarding Knowledge of Child Labor for Listed End Products (Executive Order 13126). [The Contracting Officer must list in paragraph (i)(1) any end products being acquired under this solicitation that are included in the List of Products Requiring Contractor Certification as to Forced or Indentured Child Labor, unless excluded at 22.1503(b).]

(1) Listed end products.

Listed End Product	Listed Countries of Origin
_____	_____
_____	_____

(2) Certification. [If the Contracting Officer has identified end products and countries of origin in paragraph (i)(1) of this provision, then the offeror must certify to either (i)(2)(i) or (i)(2)(ii) by checking the appropriate block.]

[ ] (i) The offeror will not supply any end product listed in paragraph (i)(1) of this provision that was mined, produced, or manufactured in the corresponding country as listed for that product.

[ ] (ii) The offeror may supply an end product listed in paragraph (i)(1) of this provision that was mined, produced, or manufactured in the corresponding country as listed for that product. The offeror certifies that it has made a good faith effort to determine whether forced or indentured child labor was used to mine, produce, or manufacture any such end product furnished under this contract. On the basis of those efforts, the offeror certifies that it is not aware of any such use of child labor.

(j) Place of manufacture. (Does not apply unless the solicitation is predominantly for the acquisition of manufactured end products.) For statistical purposes only, the offeror shall indicate whether the place of manufacture of the end products it expects to provide in response to this solicitation is predominantly—

☐ (1) In the United States (Check this box if the total anticipated price of offered end products manufactured in the United States exceeds the total anticipated price of offered end products manufactured outside the United States); or

☐ (2) Outside the United States.

(k) Certificates regarding exemptions from the application of the Service Contract Act. (Certification by the offeror as to its compliance with respect to the contract also constitutes its certification as to compliance by its subcontractor if it subcontracts out the exempt services.) [The contracting officer is to check a box to indicate if paragraph (k)(1) or (k)(2) applies.]

☐ (1) Maintenance, calibration, or repair of certain equipment as described in FAR 22.1003-4(c)(1). The offeror ( ) does ( ) does not certify that—

(i) The items of equipment to be serviced under this contract are used regularly for other than Governmental purposes and are sold or traded by the offeror (or subcontractor in the case of an exempt subcontract) in substantial quantities to the general public in the course of normal business operations;

(ii) The services will be furnished at prices which are, or are based on, established catalog or market prices (see FAR 22.1003-4(c)(2)(ii)) for the maintenance, calibration, or repair of such equipment; and

(iii) The compensation (wage and fringe benefits) plan for all service employees performing work under the contract will be the same as that used for these employees and equivalent employees servicing the same equipment of commercial customers.

☐ (2) Certain services as described in FAR 22.1003-4(d)(1). The offeror ( ) does ( ) does not certify that—

(i) The services under the contract are offered and sold regularly to non-Governmental customers, and are provided by the offeror (or subcontractor in the case of an exempt subcontract) to the general public in substantial quantities in the course of normal business operations;

(ii) The contract services will be furnished at prices that are, or are based on, established catalog or market prices (see FAR 22.1003-4(d)(2)(iii));

(iii) Each service employee who will perform the services under the contract will spend only a small portion of his or her time (a monthly average of less than 20 percent of the available hours on an annualized basis, or less than 20 percent of available hours during the contract period if the contract period is less than a month) servicing the Government contract; and

(iv) The compensation (wage and fringe benefits) plan for all service employees performing work under the contract is the same as that used for these employees and equivalent employees servicing commercial customers.

(3) If paragraph (k)(1) or (k)(2) of this clause applies—

(i) If the offeror does not certify to the conditions in paragraph (k)(1) or (k)(2) and the Contracting Officer did not attach a Service Contract Act wage determination to the solicitation, the offeror shall notify the Contracting Officer as soon as possible; and

(ii) The Contracting Officer may not make an award to the offeror if the offeror fails to execute the certification in paragraph (k)(1) or (k)(2) of this clause or to contact the Contracting Officer as required in paragraph (k)(3)(i) of this clause.

(l) Taxpayer Identification Number (TIN) (26 U.S.C. 6109, 31 U.S.C. 7701). (Not applicable if the offeror is required to provide this information to a central contractor registration database to be eligible for award.)

(1) All offerors must submit the information required in paragraphs (l)(3) through (l)(5) of this provision to comply with debt collection requirements of 31 U.S.C. 7701(c) and 3325(d), reporting requirements of 26 U.S.C. 6041, 6041A, and 6050M, and implementing regulations issued by the Internal Revenue Service (IRS).

(2) The TIN may be used by the Government to collect and report on any delinquent amounts arising out of the offeror's relationship with the Government (31 U.S.C. 7701(c)(3)). If the resulting contract is subject to the payment reporting requirements described in FAR 4.904, the TIN provided hereunder may be matched with IRS records to verify the accuracy of the offeror's TIN.

(3) Taxpayer Identification Number (TIN).

( ) TIN: _____.

( ) TIN has been applied for.

( ) TIN is not required because:

( ) Offeror is a nonresident alien, foreign corporation, or foreign partnership that does not have income effectively connected with the conduct of a trade or business in the United States and does not have an office or place of business or a fiscal paying agent in the United States;

( ) Offeror is an agency or instrumentality of a foreign government;

( ) Offeror is an agency or instrumentality of the Federal Government.

(4) Type of organization.

( ) Sole proprietorship;

( ) Partnership;

( ) Corporate entity (not tax-exempt);

( ) Corporate entity (tax-exempt); ( ) Government entity (Federal, State, or local);

( ) Foreign government;

( ) International organization per 26 CFR 1.6049-4;

( ) Other _____.

(5) Common parent.

( ) Offeror is not owned or controlled by a common parent;

( ) Name and TIN of common parent:

Name _____.

TIN _____.

(m) Restricted business operations in Sudan. By submission of its offer, the offeror certifies that the offeror does not conduct any restricted business operations in Sudan.

(n) Prohibition on Contracting with Inverted Domestic Corporations.

(1) Relation to Internal Revenue Code. An inverted domestic corporation as herein defined does not meet the definition of an inverted domestic corporation as defined by the Internal Revenue Code 25 U.S.C. 7874.

(2) Representation. By submission of its offer, the offeror represents that—

(i) It is not an inverted domestic corporation; and

(ii) It is not a subsidiary of an inverted domestic corporation.

(o) Prohibition on contracting with entities engaging in certain activities or transactions relating to Iran.

(1) The offeror shall e-mail questions concerning sensitive technology to the Department of State at CISADA106@state.gov.

(2) Representation and Certifications. Unless a waiver is granted or an exception applies as provided in paragraph (o)(3) of this provision, by submission of its offer, the offeror—

(i) Represents, to the best of its knowledge and belief, that the offeror does not export any sensitive technology to the government of Iran or any entities or individuals owned or controlled by, or acting on behalf or at the direction of, the government of Iran;

(ii) Certifies that the offeror, or any person owned or controlled by the offeror, does not engage in any activities for which sanctions may be imposed under section 5 of the Iran Sanctions Act; and

(iii) Certifies that the offeror, and any person owned or controlled by the offeror, does not knowingly engage in any transaction that exceeds $3,000 with Iran's Revolutionary Guard Corps or any of its officials, agents, or affiliates, the property and interests in property of which are blocked pursuant to the International Emergency Economic Powers Act (50 U.S.C. 1701 et seq.) (see OFAC's Specially Designated Nationals and Blocked Persons List at http://www.treasury.gov/ofac/downloads/t11sdn.pdf).

(3) The representation and certification requirements of paragraph (o)(2) of this provision do not apply if—

(i) This solicitation includes a trade agreements certification (e.g., 52.212-3(g) or a comparable agency provision); and

(ii) The offeror has certified that all the offered products to be supplied are designated country end products.

(End of Provision)

52-212-5 CONTRACT TERMS AND CONDITIONS REQUIRED TO IMPLEMENT STATUTES OR EXECUTIVE ORDERS—COMMERCIAL ITEMS (MAY 2015)

(a) The Contractor shall comply with the following Federal Acquisition Regulation (FAR) clauses, which are incorporated in this contract by reference, to implement provisions of law or Executive orders applicable to acquisitions of commercial items:

(1)52.209-10, Prohibition on Contracting with Inverted Domestic Corporations (Dec 2014)

(2) 52.233-3, Protest After Award (AUG 1996) (31 U.S.C. 3553).

(3) 52.233-4, Applicable Law for Breach of Contract Claim (OCT 2004) (Public Laws 108-77 and 108-78) (19 U.S.C 3805 note)).

(b) The Contractor shall comply with the FAR clauses in this paragraph (b) that the Contracting Officer has indicated as being incorporated in this contract by reference to implement provisions of law or Executive orders applicable to acquisitions of commercial items:

☐ (1) 52.203-6, Restrictions on Subcontractor Sales to the Government (Sept 2006), with Alternate I (Oct 1995) (41 U.S.C. 4704 and 10 U.S.C. 2402).

☐ (2) 52.203-13, Contractor Code of Business Ethics and Conduct (Apr 2010) (41 U.S.C. 3509)). __ (3) 52.203-15, Whistleblower Protections under the American Recovery and Reinvestment Act of 2009 (June 2010) (Section 1553 of Pub. L. 111-5). (Applies to contracts funded by the American Recovery and Reinvestment Act of 2009.)

☒ (4) 52.204-10, Reporting Executive Compensation and First-Tier Subcontract Awards (Jul 2013) (Pub. L. 109-282) (31 U.S.C. 6101 note).

☐ (5) [RESERVED]

☐ (6) 52.204-14, Service Contract Reporting Requirements (Jan 2014) (Pub. L. 111-117, section 743 of Div. C).

☐ (7) 52.204-15, Service Contract Reporting Requirements for Indefinite-Delivery Contracts (Jan 2014) (Pub. L. 111-117, section 743 of Div. C).

☒ (8) 52.209-6, Protecting the Government's Interest When Subcontracting with Contractors Debarred, Suspended, or Proposed for Debarment. (Aug 2013) (31 U.S.C. 6101 note).

☐ (9) 52.209-9, Updates of Publicly Available Information Regarding Responsibility Matters (Jul 2013) (41 U.S.C. 2313).

☐ (10) RESERVED

☐ (11)(i) 52.219-3, Notice of HUBZone Set-Aside or Sole-Source Award (Nov 2011) (15 U.S.C. 657a).

☐ (ii) Alternate I (Nov 2011) of 52.219-3 ☐ (12)(i) 52.219-4, Notice of Price Evaluation Preference for HUBZone Small Business Concerns (OCT 2014) (if the offeror elects to waive the preference, it shall so indicate in its offer) (15 U.S.C. 657a)

☐ (ii) Alternate I (Jan 2011) of 52.219-4

☐ (12)(i) 52.219-4, Notice of Price Evaluation Preference for HUBZone Small Business Concerns (OCT 2014) (if the offeror elects to waive the preference, it shall so indicate in its offer) (15 U.S.C. 657a)

☐ (13) [Reserved]

☒ (14)(i) 52.219-6, Notice of Total Small Business Set-Aside (Nov 2011) (15 U.S.C. 644)

☐ (ii) Alternate I (Nov 2011).

☐ (iii) Alternate II (Nov 2011).).
☐ (15)(i) 52.219-7, Notice of Partial Small Business Set-Aside (June 2003) (15 U.S.C. 644)
☐ (ii) Alternate I (Oct 1995) of 52.219-7.
☐ (iii) Alternate II (Mar 2004) of 52.219-7.
☐ (16) 52.219-8,Utilization of Small Business Concerns (15 U.S.C. 637(d)(2)and(3)).
__ (17)(i) 52.219-9, Small Business Subcontracting Plan (OCT 2014)
☐ (ii) Alternate I (Oct 2001) of 52.219-9.
☐ (iii) Alternate II (Oct 2001) of 52.219-9.
☐ (iv) Alternate III (OCT 2014) of 52.219-9.
☒ (18) 52.219-13, Notice of Set-Aside of Orders (Nov 2011)(15 U.S.C. 644(r))
☐ (19) 52.219-14, Limitations on Subcontracting (Nov 2011) (15 U.S.C. 637(a)(14),
☐ (20) 52.219-16, Liquidated Damages—Subcontracting Plan (Jan 1999) (15 U.S.C. 637(d)(4)(F)(i))
☐ (21) 52.219-27, Notice of Service-Disabled Veteran-Owned Small Business Set-Aside (Nov 2011) (15 U.S.C. 657 f).
☒ (22) 52.219-28, Post Award Small Business Program Re-representation (Jul 2013)
☐ (23) 52.219-29, Notice of Set-Aside for Economically Disadvantaged Women-Owned Small Business (EDWOSB) Concerns (Jul 2013) (15 U.S.C. 637(m))
☐ (24) 52.219-30, Notice of Set-Aside for Women-Owned Small Business (WOSB) Concerns Eligible Under the WOSB Program (Jul 2013) (15 U.S.C. 637(m).
☒ (25) 52.222-3, Convict Labor (June 2003) (E.O. 11755).
☒ (26) 52.222-19, Child Labor—Cooperation with Authorities and Remedies (Jan 2014) (E.O. 13126
☒ (27) 52.222-21, Prohibition of Segregated Facilities (Apr 2015).
☒ (28) 52.222-26, Equal Opportunity (May 2015) (E.O. 11246).
☐ (29) 52.222-35, Equal Opportunity for Veterans (Jul 2014)(38 U.S.C. 4212).
☒ (30) 52.222-36, Equal Opportunity for Workers with Disabilities (Jul 2014) (29 U.S.C. 793
☐ (31) 52.222-37, Employment Reports on Veterans (Jul 2014) (38 U.S.C. 4212)
☐ (32) 52.222-40, Notification of Employee Rights Under the National Labor Relations Act (Dec 2010) (E.O. 13496).
☒ (33) (i) 52.222-50, Combating Trafficking in Persons (Mar 2015) (22 U.S.C. chapter 78 and E.O. 13627).
☐ (ii) Alternate I (Mar 2015) of 52.222-50 (22 U.S.C. chapter 78 and E.O. 13627).
☐ (34)52.222-54, Employment Eligibility Verification (AUG 2013). (Executive Order 12989). (Not applicable to the acquisition of commercially available off-the-shelf items or certain other types of commercial items as prescribed in 22.1803.)
☐ (35)(i) 52.223-9, Estimate of Percentage of Recovered Material Content for EPA–Designated Items (May 2008) (42 U.S.C. 6962(c)(3)(A)(ii)).
☐ (ii) Alternate I (May 2008) of 52.223-9 (42 U.S.C. 6962(i)(2)(C)).
☐ (36)(i) 52.223-13, Acquisition of EPEAT®-Registered Imaging Equipment (JUN 2014) (E.O.s 13423 and 13514
☐ (ii) Alternate I (Jun 2014) of 52.223-13.
☐ (37)(i) 52.223-14, Acquisition of EPEAT®-Registered Televisions (JUN 2014) (E.O.s 13423 and 13514).
☐ (ii) Alternate I (Jun 2014) of 52.223-14
☐ (38) 52.223-15, Energy Efficiency in Energy-Consuming Products (DEC 2007) (42 U.S.C. 8259b).
☐ (39)(i) 52.223-16, Acquisition of EPEAT®-Registered Personal Computer Products (JUN 2014) (E.O.s 13423 and 13514).
☐ (ii) Alternate I (Jun 2014) of 52.223-16
☒ (40) 52.223-18, Encouraging Contractor Policies to Ban Text Messaging While Driving (AUG 2011) (E.O. 13513).
☒ (41) 52.225-1, Buy American—Supplies (May 2014) (41 U.S.C. chapter 83

☐ (42)(i) 52.225-3, Buy American—Free Trade Agreements—Israeli Trade Act (May 2014) (41 U.S.C. chapter 83, 19 U.S.C. 3301 note, 19 U.S.C. 2112 note, 19 U.S.C. 3805 note, 19 U.S.C. 4001 note, Pub. L. 103-182, 108-77, 108-78, 108-286, 108-302, 109-53, 109-169, 109-283, 110-138, 112-41, 112-42, and 112-43.
☐ (ii) Alternate I (May 2014) of 52.225-3.
☐ (iii) Alternate II (May 2014) of 52.225-3.
☐ (iv) Alternate III (May 2014) of 52.225-3.
☐ (43) 52.225-5, Trade Agreements (Nov 2013) (19 U.S.C. 2501, *et seq.*, 19 U.S.C. 3301 note).
☒ (44) 52.225-13, Restrictions on Certain Foreign Purchases (June 2008) (E.O.'s, proclamations, and statutes administered by the Office of Foreign Assets Control of the Department of the Treasury).
☐ (45) 52.225-26, Contractors Performing Private Security Functions Outside the United States (Jul 2013) (Section 862, as amended, of the National Defense Authorization Act for Fiscal Year 2008; 10 U.S.C. 2302 Note).
☐ (46) 52.226-4, Notice of Disaster or Emergency Area Set-Aside (Nov 2007) (42 U.S.C. 5150).
☐ (47) 52.226-5, Restrictions on Subcontracting Outside Disaster or Emergency Area (Nov 2007) (42 U.S.C. 5150).
☐ (48) 52.232-29, Terms for Financing of Purchases of Commercial Items (Feb 2002) (41 U.S.C. 4505, 10 U.S.C. 2307(f)).
☐ (49) 52.232-30, Installment Payments for Commercial Items (Oct 1995) (41 U.S.C. 4505, 10 U.S.C. 2307(f)).
☒ (50) 52.232-33, Payment by Electronic Funds Transfer—System for Award Management (Jul 2013) (31 U.S.C. 3332).
☐ (51) 52.232-34, Payment by Electronic Funds Transfer—Other than System for Award Management (Jul 2013) (31 U.S.C. 3332).
☐ (52) 52.232-36, Payment by Third Party (May 2014) (31 U.S.C. 3332).
☐ (53) 52.239-1, Privacy or Security Safeguards (Aug 1996) (5 U.S.C. 552a).
☐ (54)(i) 52.247-64, Preference for Privately Owned U.S.-Flag Commercial Vessels (Feb 2006) (46 U.S.C. Appx. 1241(b) and 10 U.S.C. 2631).
☐ (ii) Alternate I (Apr 2003) of 52.247-64.

(c) The Contractor shall comply with the FAR clauses in this paragraph (c), applicable to commercial services, that the Contracting Officer has indicated as being incorporated in this contract by reference to implement provisions of law or Executive orders applicable to acquisitions of commercial items:

[*Contracting Officer check as appropriate.*]

☐ (1) 52.222-41, Service Contract Act of 1965 (May 2014) (41 U.S.C. chapter 67.)
☐ (2) 52.222-42, Statement of Equivalent Rates for Federal Hires (May 2014) (29 U.S.C. 206 and 41 U.S.C. chapter 67.)
☐ (3) 52.222-43, Fair Labor Standards Act and Service Contract Labor Standards—Price Adjustment (Multiple Year and Option Contracts) (May 2014) (29 U.S.C. 206 and 41 U.S.C. chapter 67.)
☐ (4) 52.222-44, Fair Labor Standards Act and Service Contract Labor Standards Act—Price Adjustment (May 2014) (29 U.S.C. 206 and 41 U.S.C. chapter 67.)
☐ (5) 52.222-51, Exemption from Application of the Service Contract Labor Standards to Contracts for Maintenance, Calibration, or Repair of Certain Equipment—Requirements (May 2014) (41 U.S.C chapter 67.)
☐ (6) 52.222-53, Exemption from Application of the Service Contract Labor Standards to Contracts for Certain Services—Requirements (May 2014) (41 U.S.C. chapter 67.)
☐ (7) 52.222-17, Nondisplacement of Qualified Workers (May 2014) (E.O.13495)
☐ (8) 52.226-6, Promoting Excess Food Donation to Nonprofit Organizations (May 2014) (42 U.S.C 1792)
☐ (9) 52.237-11, Accepting and Dispensing of $1 Coin (Sept 2008) (31 U.S.C. 5112(p)(1))
☐ (10) 52.222-55, Minimum Wages Under Executive Order 13658 (Dec 2014) (Executive Order 13658).

(d) *Comptroller General Examination of Record.* The Contractor shall comply with the provisions of this paragraph (d) if this contract was awarded using other than sealed bid, is in excess of the simplified acquisition threshold, and does not contain the clause at 52.215-2, Audit and Records—Negotiation.
(1) The Comptroller General of the United States, or an authorized representative of the Comptroller General, shall have access to and right to examine any of the Contractor's directly pertinent records involving transactions related to this contract.
(2) The Contractor shall make available at its offices at all reasonable times the records, materials, and other evidence for examination, audit, or reproduction, until 3 years after final payment under this contract or for any shorter period specified in FAR Subpart 4.7, Contractor Records Retention, of the other clauses of this contract. If this contract is completely or partially terminated, the records relating to the work terminated shall be made available for 3 years after any resulting final termination settlement. Records relating to appeals under the disputes clause or to litigation or the settlement of claims arising under or relating to this contract shall be made available until such appeals, litigation, or claims are finally resolved.
(3) As used in this clause, records include books, documents, accounting procedures and practices, and other data, regardless of type and regardless of form. This does not require the Contractor to create or maintain any record that the Contractor does not maintain in the ordinary course of business or pursuant to a provision of law.
(e)(1) Notwithstanding the requirements of the clauses in paragraphs (a), (b), (c), and (d) of this clause, the Contractor is not required to flow down any FAR clause, other than those in this paragraph (e)(1) in a subcontract for commercial items. Unless otherwise indicated below, the extent of the flow down shall be as required by the clause—
(i) 52.203-13, Contractor Code of Business Ethics and Conduct (Apr 2010) (41 U.S.C. 3509)
(ii) 52.219-8, Utilization of Small Business Concerns (Oct 2014) (15 U.S.C. 637(d)(2) and (3)), in all subcontracts that offer further subcontracting opportunities. If the subcontract (except subcontracts to small business concerns) exceeds $650,000 ($1.5 million for construction of any public facility), the subcontractor must include 52.219-8 in lower tier subcontracts that offer subcontracting opportunities.
(iii) 52.222-17, Nondisplacement of Qualified Workers (May 2014) (E.O. 13495). Flow down required in accordance with paragraph (l) of FAR clause 52.222-17.
(iv) 52.222-26, Equal Opportunity (Mar 2007) (E.O. 11246).
(v) 52.222-35, Equal Opportunity for Veterans (Jul 2014) (38 U.S.C. 4212).
(vi) 52.222-36, Equal Opportunity for Workers with Disabilities (Jul 2014) (29 U.S.C. 793).
(vii) 52.222-37, Employment Reports on Veterans (Jul 2014) (38 U.S.C. 4212)
(viii) 52.222-40, Notification of Employee Rights Under the National Labor Relations Act (Dec 2010) (E.O. 13496). Flow down required in accordance with paragraph (f) of FAR clause 52.222-40.
(ix) 52.222-41, Service Contract Labor Standards (May 2014) (41 U.S.C. chapter 67.).
(x) 52.222-50, Combating Trafficking in Persons (Feb 2009) (22 U.S.C. 7104(g)).
___ Alternate I (Aug 2007) of 52.222-50 (22 U.S.C. 7104(g)).
(xi) 52.222-51, Exemption from Application of the Service Contract Labor Standards to Contracts for Maintenance, Calibration, or Repair of Certain Equipment-Requirements (May 2014) (41 U.S.C. chapter 67.).
(xii) 52.222-53, Exemption from Application of the Service Contract Labor Standards to Contracts for Certain Services-Requirements (May 2014) (41 U.S.C. chapter 67.).
(xiii) 52.222-54, Employment Eligibility Verification (Aug 2013).
(xiv) 52.225-26, Contractors Performing Private Security Functions Outside the United States (Jul 2013) (Section 862, as amended, of the National Defense Authorization Act for Fiscal Year 2008; 10 U.S.C. 2302 Note).
(xv) 52.226-6, Promoting Excess Food Donation to Nonprofit Organizations (May 2014) (42 U.S.C. 1792). Flow down required in accordance with paragraph (e) of FAR clause 52.226-6.

(xvi) 52.247-64, Preference for Privately Owned U.S.-Flag Commercial Vessels (Feb 2006) (46 U.S.C. Appx. 1241(b) and 10 U.S.C. 2631). Flow down required in accordance with paragraph (d) of FAR clause 52.247-64.
(xvii) 52.222-55, Minimum Wages Under Executive Order 13658 (Dec 2014) (Executive Order 13658).

(2) While not required, the contractor may include in its subcontracts for commercial items a minimal number of additional clauses necessary to satisfy its contractual obligations.

(End of clause)

Statement of Work for Scaled Fuel Pump for Waterflow Testing

This is a replacement inducer for the RS25 "angulated" inlet testing.

Description: Inducer Manufacture
Requested Delivery: 12 weeks

The task may require but not necessarily include rough and finish turning, multi-axis milling, deburring, inspection, passivation, and dynamic balancing. A drawing of the inducer is attached to assist the contractor in understanding the requirement. Note that this document may have been edited to comply with the regulations governing public release of technical data.

Government Furnished Information
One drawing and associated solid model describe the hardware to be manufactured. These documents are EXPORT CONTROLLED under the Arms Export Control Act, Section IV of the United States Munitions List. These documents shall be provided on request and confirmation of compliance with the release or transfer of technical data under the Arms Export Control Act.

MED01131-1.pdf Drawing
MED01131.stp Solid Model

Deliverables
One (1) part number MED01131-1 is required. Material certifications shall be provided on delivery. Complete inspection of all items is required and the inspection results shall be provided on delivery. Any deviations, non-conformances, and/or repairs shall be documented and provide on delivery. All items shall be delivered at the end of the period of performance. All items shall be packed and secured for shipment.

REVISIONS				
ZONE	SYM	DESCRIPTION	DATE	APPROVAL

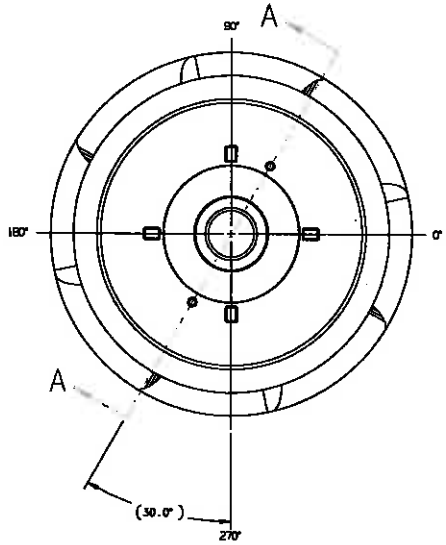

MED01130-1 ASSY

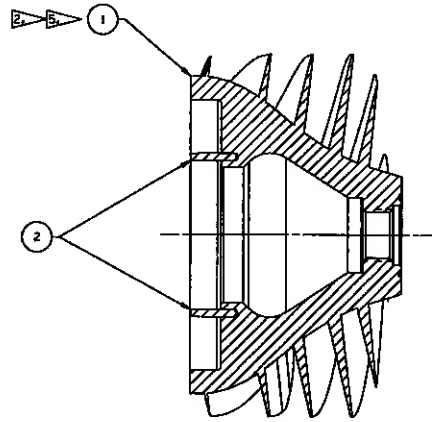

SECTION A-A
ROTATED 30° CCW

NOTES: (UNLESS OTHERWISE SPECIFIED)

1. DIMENSIONING AND TOLERANCING PER ASME Y14.5M-1994.
   -UNLESS SEPARATE TOLERANCES ARE SHOWN, PERFECT ORIENTATION AT WMC FOR RELATED FEATURES IS REQUIRED.
   -GENERAL ANGULAR TOLERANCE DOES NOT APPLY TO IMPLIED 90 DEGREE ANGLES.

2. MATERIAL: 15-5 PH STAINLESS STEEL (UNS S15500), H1025, PER SAE AMS 5659. ULTRASONIC INSPECT RAW MATERIAL STOCK PER ASTM E114 WITH ACCEPTANCE CRITERIA PER MSFC-STD-1249, MINIMUM DETECTABILITY ASSUMPTIONS FOR UT-STD, CLASS A.

3. REMOVE ALL BURRS AND BREAK SHARP EDGES TO R .005-.015.

4. 63 ALL MACHINED SURFACES.

5. PASSIVATE PER SAE AMS-QQ-P-35, TYPE II.

6. USE TWO-PLANE BALANCE PER ISO 1940/1-1986(E), TO A BALANCE QUALITY GRADE OF G2.5 AT A MAX SPEED OF 8000 RPM. REMOVE MATERIAL FROM DESIGNATED AREA AS REQUIRED FOR BALANCING. NO MATERIAL SHALL BE REMOVED WITHIN .125 OF HUB PROFILE OR .250 OF DATUM C.
   USE 0.13 MINIMUM ALLOWABLE FILLET RADIUS. AFTER BALANCING, DETERMINE AND RECORD THE AMOUNT OF DYNAMIC UNBALANCE PRESENT AT PLANES I AND II.

7. MACHINE THE HUB AND BLADE CONTOURS PER THE SUPPLIED 3D MODEL. TABULATED COORDINATES ARE FOR REFERENCE AND INSPECTION ONLY.

8. IDENTIFY PART WITH THE INFORMATION SHOWN BELOW PER SAE AS478-7A OCR-A12 IN APPROXIMATE LOCATION SHOWN, ORIENTATION OPTIONAL. CONTROL SERIAL NUMBERS BEGINNING WITH 001.

   MED01131-1-XXX (WHERE XXX IS SERIAL NUMBER)
   REV X (WHERE X IS DRAWING REVISION; USE "-" FOR INITIAL RELEASE)
   MFR-XXXXX (WHERE XXXXX IS MANUFACTURER'S CAGE CODE)

9. PREPARE SPECIFIED SURFACES PER MSFC-ROMT-1282 OR EQUIVALENT. APPLY NPI 425 (NASA LUBRICANT MLR-21 OR EQUIVALENT TO THESE SURFACES PER MSFC-SPEC-30M60434 OR EQUIVALENT. THICKNESS OF 0.0002 TO 0.0005. DIMENSIONS APPLY PRIOR TO APPLICATION OF DRY FILM LUBE.

10. CLEAN AND MAINTAIN TO LEVEL VC-SENSITIVE PER JSC-SN-C-0005.

11. FOR O-RING PER SAE AS568A-025.

12. SCALE FACTOR FOR THIS INDUCER IS .5031.

13. CHEMICALLY ETCH LINE .015-.025 WIDE X .003-.013 DEEP PER SAE AS478-7A OCR-A12.

MED01131 B -

QTY REQD	FIND NO.	PART NUMBER	CAGE CODE	UNIT WEIGHT	DESCRIPTION	MATERIAL (REF)
2	2	MS16555-629		.003	.125 DIA X .75 LG DOWEL PIN	410 OR 416 SST
1	1	MED01131-3		8.95	INDUCER	15-5 PH SST, (UNS S15500)

ENGINEERING PARTS LIST

MED01131-3 SHOWN SHT 2 & 3
MED01131-1 ASSY SHOWN

SEE ENGINEERING RECORDS		TOLERANCE EXCEPT AS NOTED DIMENSIONS ARE IN INCHES DECIMAL .XX±.03 .XXX±.010 ANGLE ±.5°	ORIGINAL DATE OF DRAWING 01/23/04	INDUCER	GEORGE C. MARSHALL SPACE FLIGHT CENTER NATIONAL AERONAUTICS AND SPACE ADMINISTRATION MARSHALL SPACE FLIGHT CENTER, AL 35812
MED01130	TD42-0323	MATERIAL 2	DRAWN		
		HEAT TREAT	CHECKED		
NEXT ASSY	USED ON	FINAL FINISH 5	SUBMITTED S SKELLEY	EST WT 8.95 LBS	SCALE 1/1 & NOTED
APPLICATION			APPROVED R STROUD	CODE 14991	SIZE D MED01131 SHEET 1 OF 3

REVISIONS				
ZONE	SYM	DESCRIPTION	DATE	APPROVAL

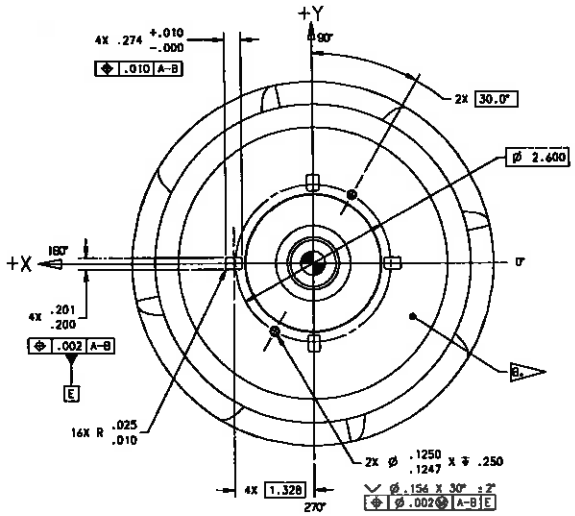

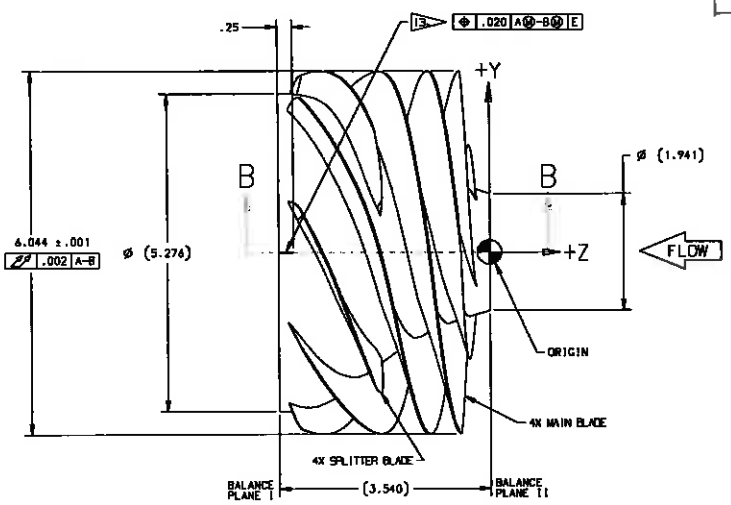

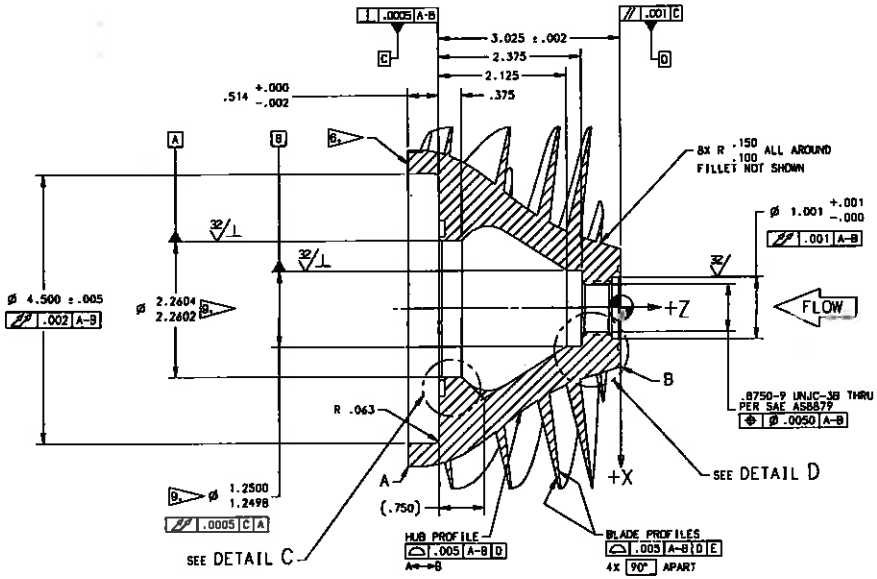

SECTION B–B

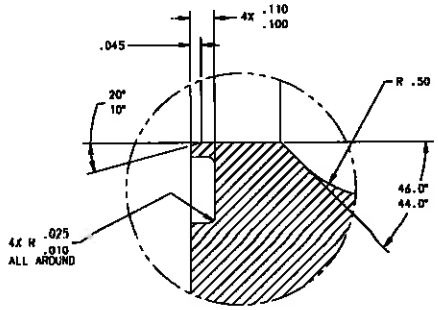

DETAIL C
SCALE 4/1

MED01131

MED01131-3 SHOWN

GEORGE C. MARSHALL SPACE FLIGHT CENTER NATIONAL AERONAUTICS AND SPACE ADMINISTRATION MARSHALL SPACE FLIGHT CENTER, AL 35812	
CODE 14931	DWG SIZE D — MED01131
	SHEET 2 OF 3