| REVISION HISTORY | | | | |
|---|---|---|---|---|
| ZONE | REV | DESCRIPTION | DATE | APPROVED |
| | A | GENERAL REVISIONS | 2015/04/15 | DMD |

1. MATERIAL: 316 STAINLESS STEEL.
2. 64 Ra ALL MACHINED SURFACES.
3. IDENTIFY BY BAGGING AND TAGGING WITH DRAWING PART NUMBER 120304MRC013 PER SAE-AS478, METHOD 35D.

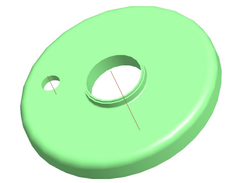

SCALE 1/1

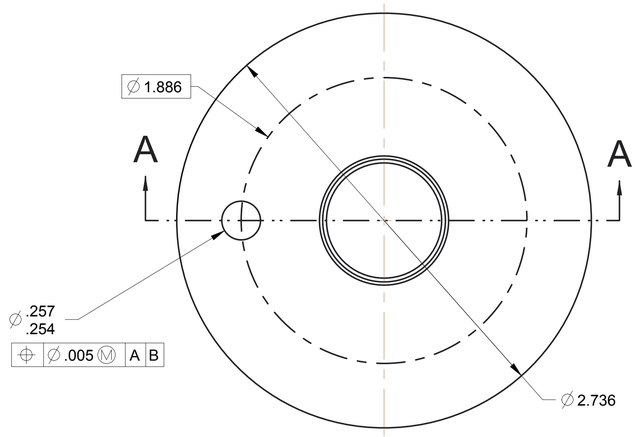


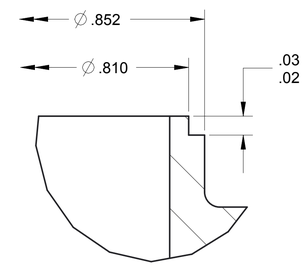


DETAIL B
SCALE 10/1

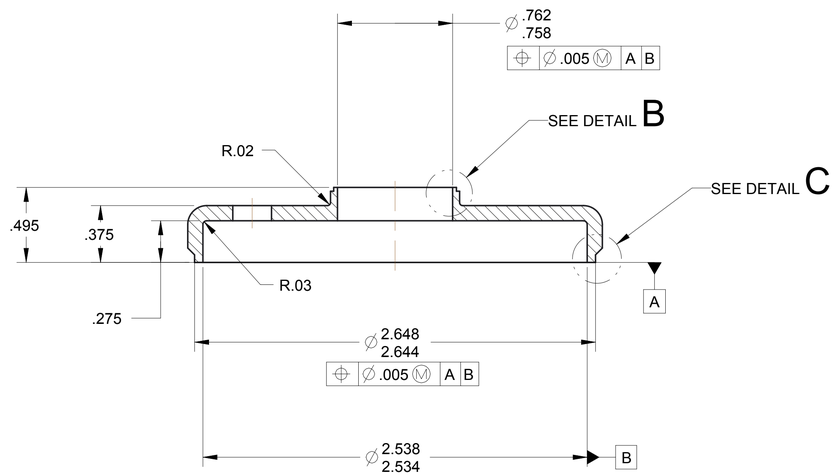


SECTION A-A

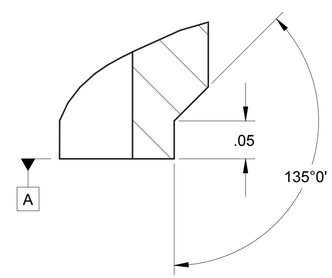


DETAIL C
SCALE 10/1

| | | | | |
|---|---|---|---|---|
| 120304MRC010 | | UNLESS OTHERWISE SPECIFIED DIMENSIONS ARE IN INCHES X.X ± 0.03 X.XXX ± 0.005 X.XX ± 0.01 ANGLE ± 0° 30' BREAK EDGES .01-.02 | RELEASE DATE | 2015/04/06 |
| NEXT ASSY | USED ON | INTERPRET DIMENSIONS AND TOLERANCES PER ASME Y14.5M - 1994 | DESIGNER | LMP / D. DIEDRICK |
| APPLICATION | | THIRD ANGLE PROJECTION | ENGINEER | LET / M. GIBSON |
| CONTRACTOR: | - | | STATE | In Work |
| CONTRACT NO: | - | | WINDCHILL PRODUCT | 120304_Technology_Demonstration_U |
| | | | MODEL | 120304MRC013_STIRLING_BACK_CAP |

NATIONAL AERONAUTICS AND SPACE ADMINISTRATION
JOHN H. GLENN RESEARCH CENTER
LEWIS FIELD, CLEVELAND, OHIO

TITLE
STIRLING THERMAL PROTOTYPE END CAP

| SIZE | CAGE CODE | DWG NO | REV |
|---|---|---|---|
| D | 1QFP5 | 120304MRC013 | A |

SCALE: 2/1 SHEET 1 OF 1

DWG NO 120304MRC013 SH 1 REV A