REVISION HISTORY				
ZONE	REV	DESCRIPTION	DATE	APPROVED
	A	GENERAL REVISIONS	2015/04/15	DMD

1. MATERIAL: 200 NICKEL.
2. 64 Ra ALL MACHINED SURFACES.
3. IDENTIFY BY BAGGING AND TAGGING WITH DRAWING PART NUMBER 120304MRC011 PER SAE-AS478, METHOD 35D.

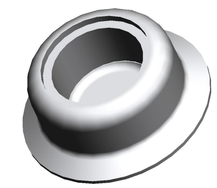

SCALE 1/1

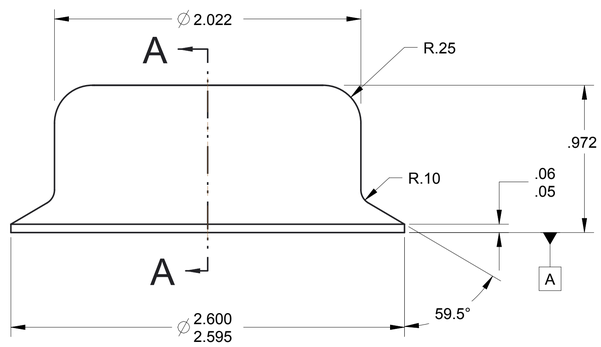

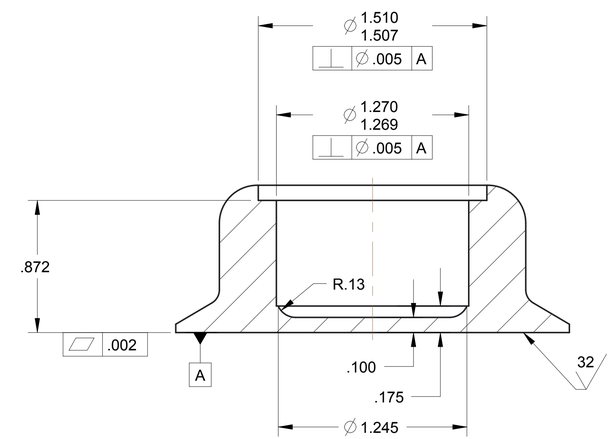

SECTION A-A

		UNLESS OTHERWISE SPECIFIED DIMENSIONS ARE IN INCHES X.X ± 0.03 X.XXX ± 0.005 X.XX ± 0.01 ANGLE ± 0° 30' BREAK EDGES 1-.02 INTERPRET DIMENSIONS AND TOLERANCES PER ASME Y14.5M - 1994	RELEASE DATE	2015/04/06
			DESIGNER	LMP / D. DIEDRICK
			ENGINEER	LET / M. GIBSON
120304MRC010			STATE	In Work
NEXT ASSY	USED ON	THIRD ANGLE PROJECTION	WINDCHILL PRODUCT	
APPLICATION			120304_Technology_Demonstration_U	
CONTRACTOR:	-		MODEL	
CONTRACT NO:	-		120304MRC011_STIRLING_MAG_HEAT	

NATIONAL AERONAUTICS AND SPACE ADMINISTRATION
JOHN H. GLENN RESEARCH CENTER
LEWIS FIELD, CLEVELAND, OHIO

TITLE
STIRLING THERMAL PROTOTYPE HEAT COLLECTOR

SIZE	CAGE CODE	DWG NO	REV
D	1QFP5	120304MRC011	A

SCALE: SHEET 1 OF 1

DWG NO 120304MRC011 SH 1 REV A