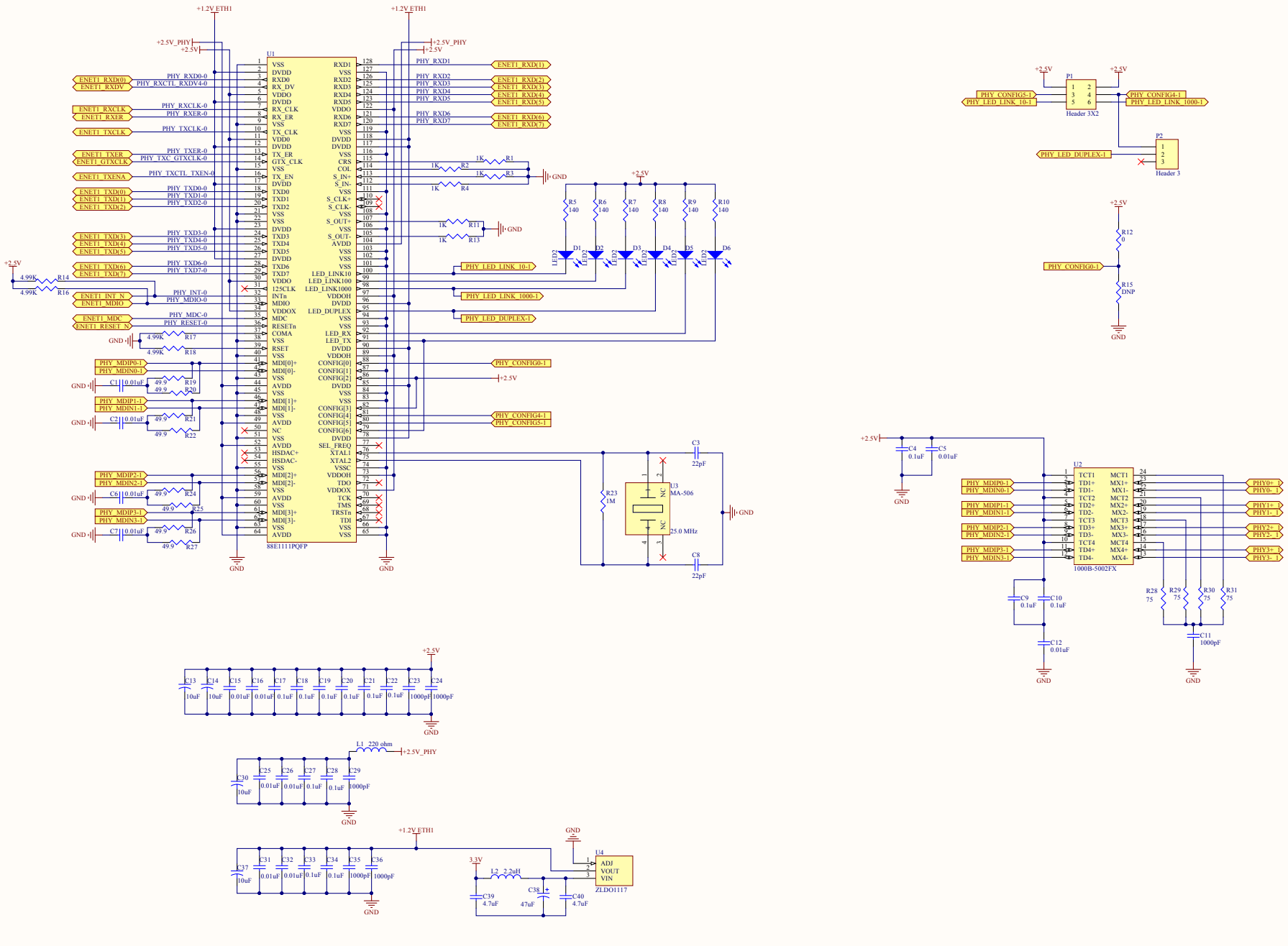

Title: COMMUNICATIONS CARRIER BOARD SCHEMATIC

Size	Number	Revision
C		

Date: 7/23/2015 Sheet of

File: C:\Odin_local_backup\...\Comm CB Ethernet.SchDoc

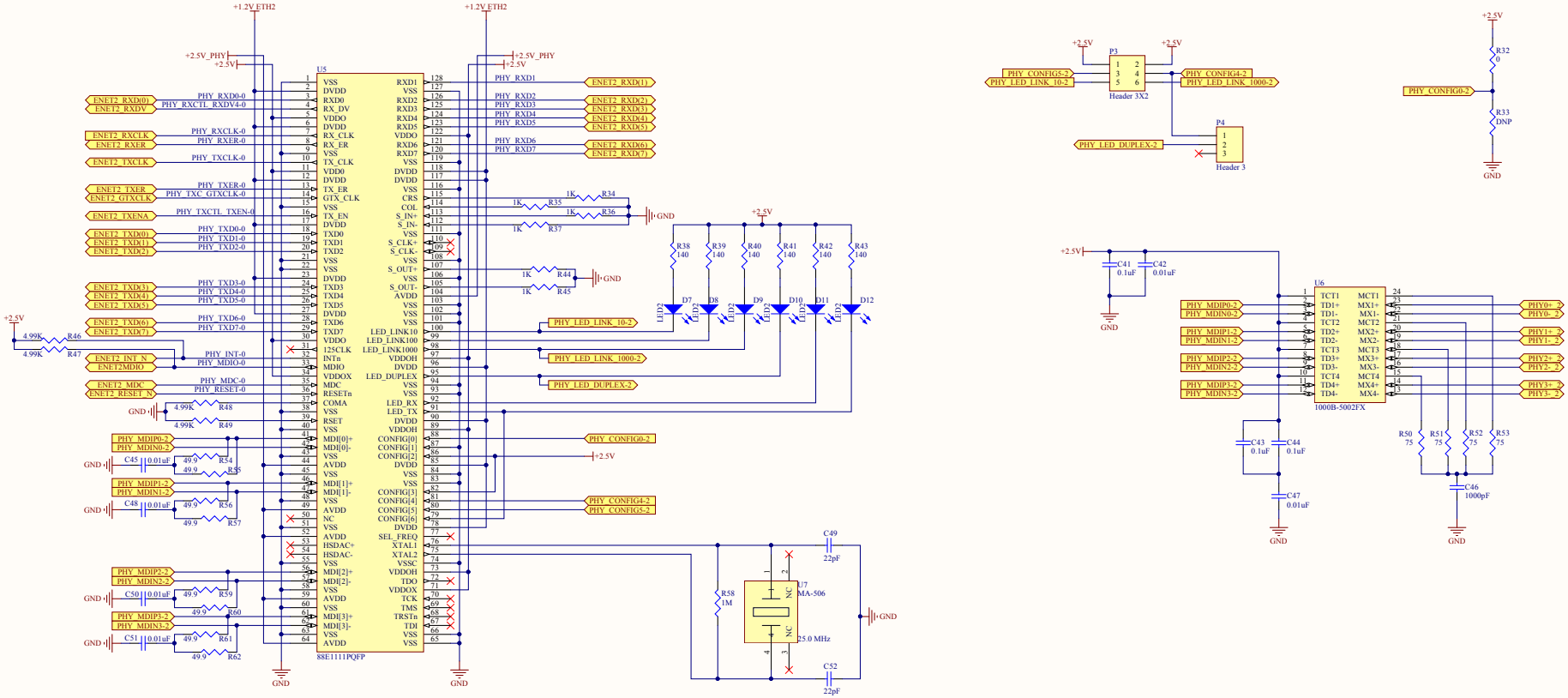

Title	COMMUNICATIONS CARRIER BOARD SCHEMATIC		
Size C	Number		Revision
Date: 7/23/2015		Sheet of	
File: C:\Odin_local_backup\...\Comm CB Ethernet.SchDoc			

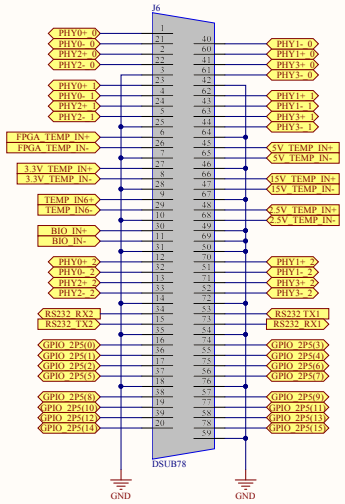

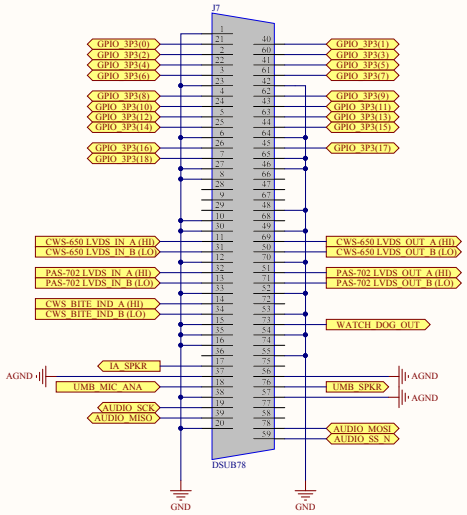

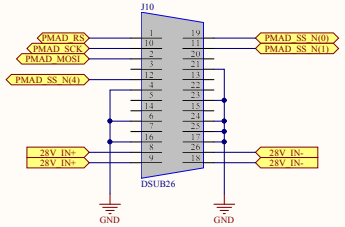

Title	COMMUNICATIONS CARRIER BOARD SCHEMATIC	
Size C	Number	Revision
Date: 7/23/2015	Sheet of	
File: C:\Odin_local_backup\...\Comm CB Exterior Connectors.SchDoc		

COMM SERIAL PORT CIRCUIT

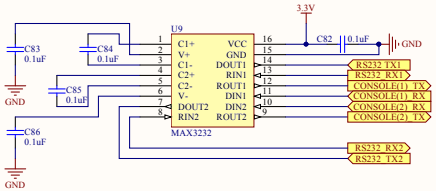

COMM FLASH

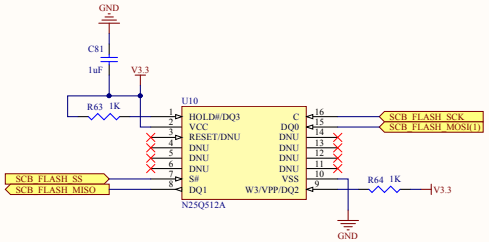

COMM PROCESSOR INDICATOR LEDS

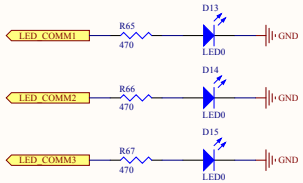

JTAG HEADER

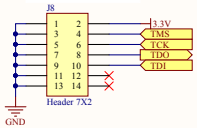

BITE INDICATOR INTERFACES

MANUAL RESET TO DRIVE BITE

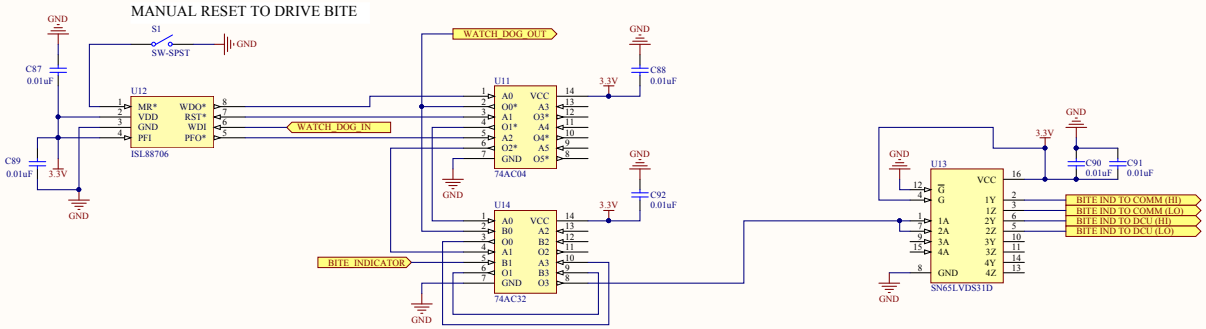

Title: COMMUNICATIONS CARRIER BOARD SCHEMATIC		
Size: C	Number	Revision
Date: 7/23/2015	Sheet of	
File: C:\Odin_local_backup\...\Comm CB Misc.SchDoc	Drawn By:	

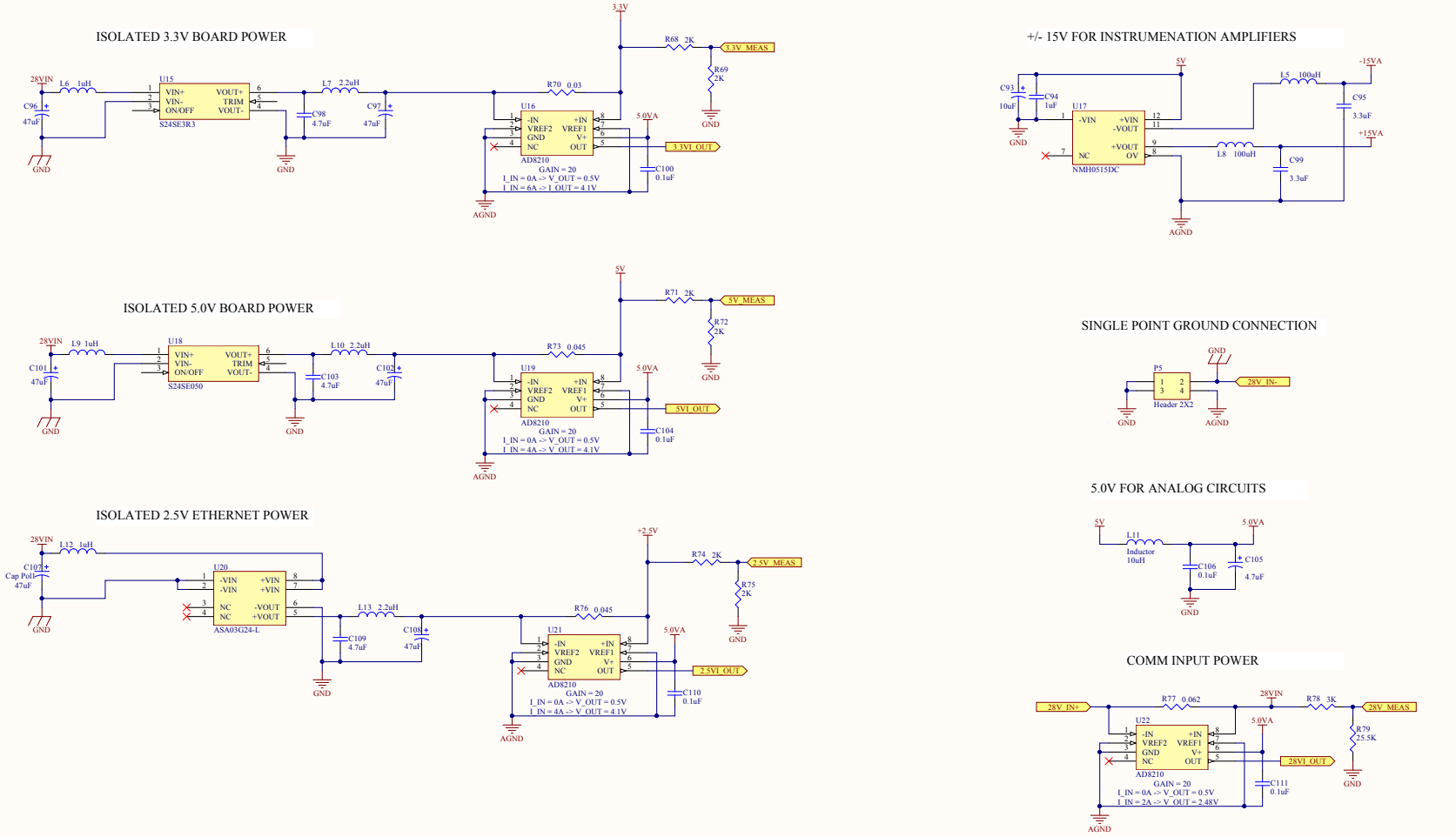

Title	COMMUNICATIONS CARRIER BOARD SCHEMATIC	
Size C	Number	Revision
Date: 7/23/2015	Sheet of	
File: C:\Odin_local_backup\...\Comm CB Power.SchDoc	Drawn By:	

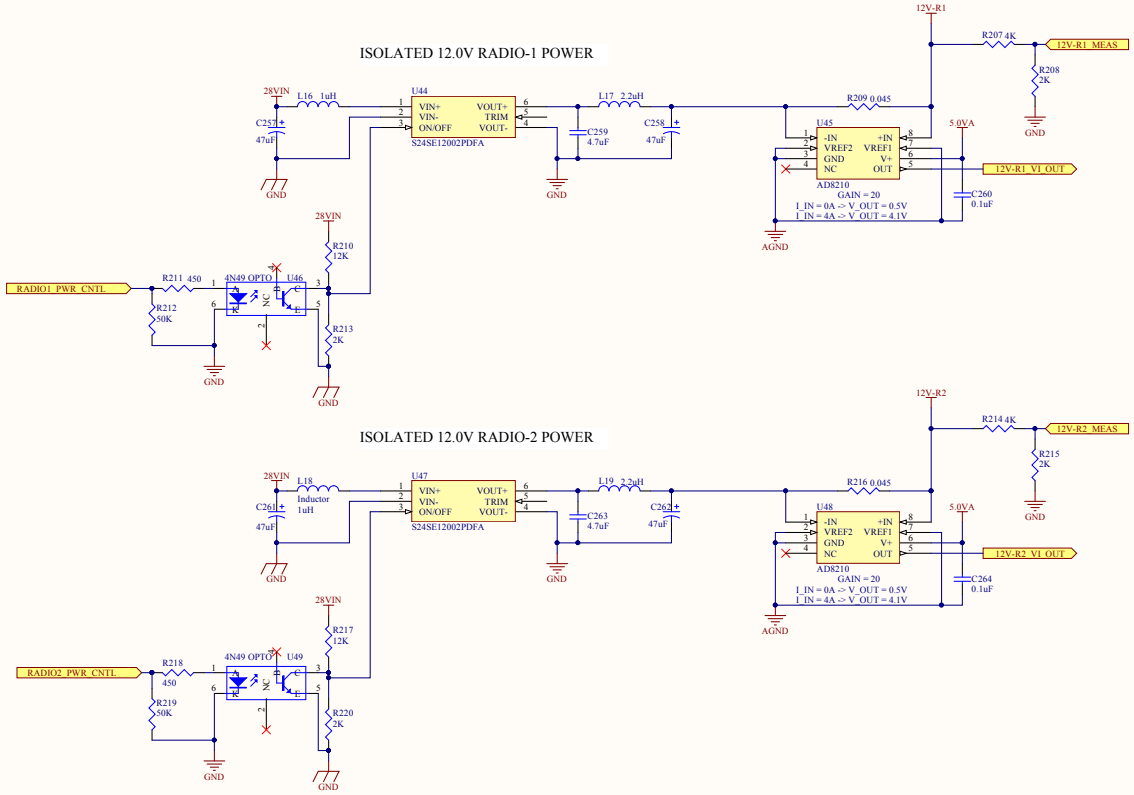

Title	COMMUNICATIONS CARRIER BOARD SCHEMATIC	
Size C	Number	Revision
Date: 7/23/2015	Sheet of	
File: C:\Odin_local_backup\...\Comm CB Power.SchDoc	Drawn By:	

BIOMED ADC CIRCUIT

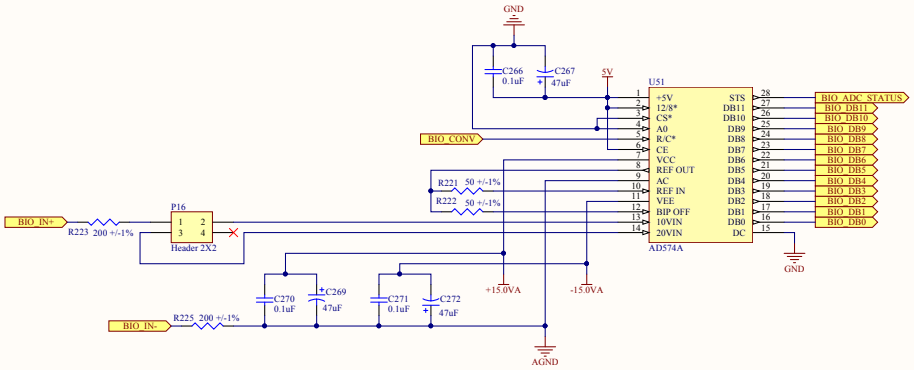

BIOMED DIGITAL LEVEL TRANSLATION

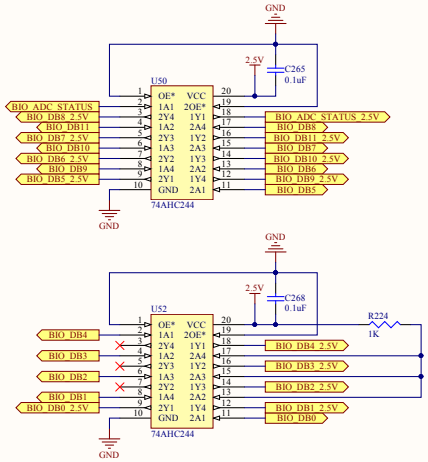

UMBILICAL SPEAKER DAC CIRCUIT

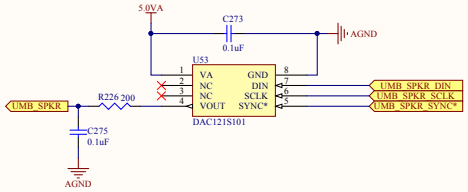

IA SPEAKER DAC CIRCUIT

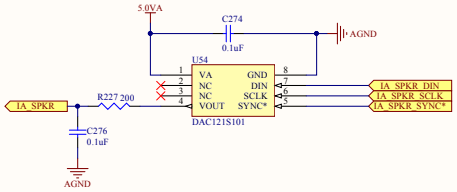

UMBILICAL MICROPHONE ADC CIRCUIT

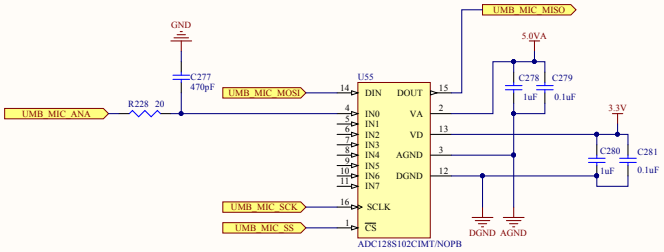

Title: COMMUNICATIONS CARRIER BOARD SCHEMATIC		
Size: C	Number	Revision
Date: 7/23/2015	Sheet of	
File: C:\Odin_local_backup\...\Comm CB Sensor.SchDoc		

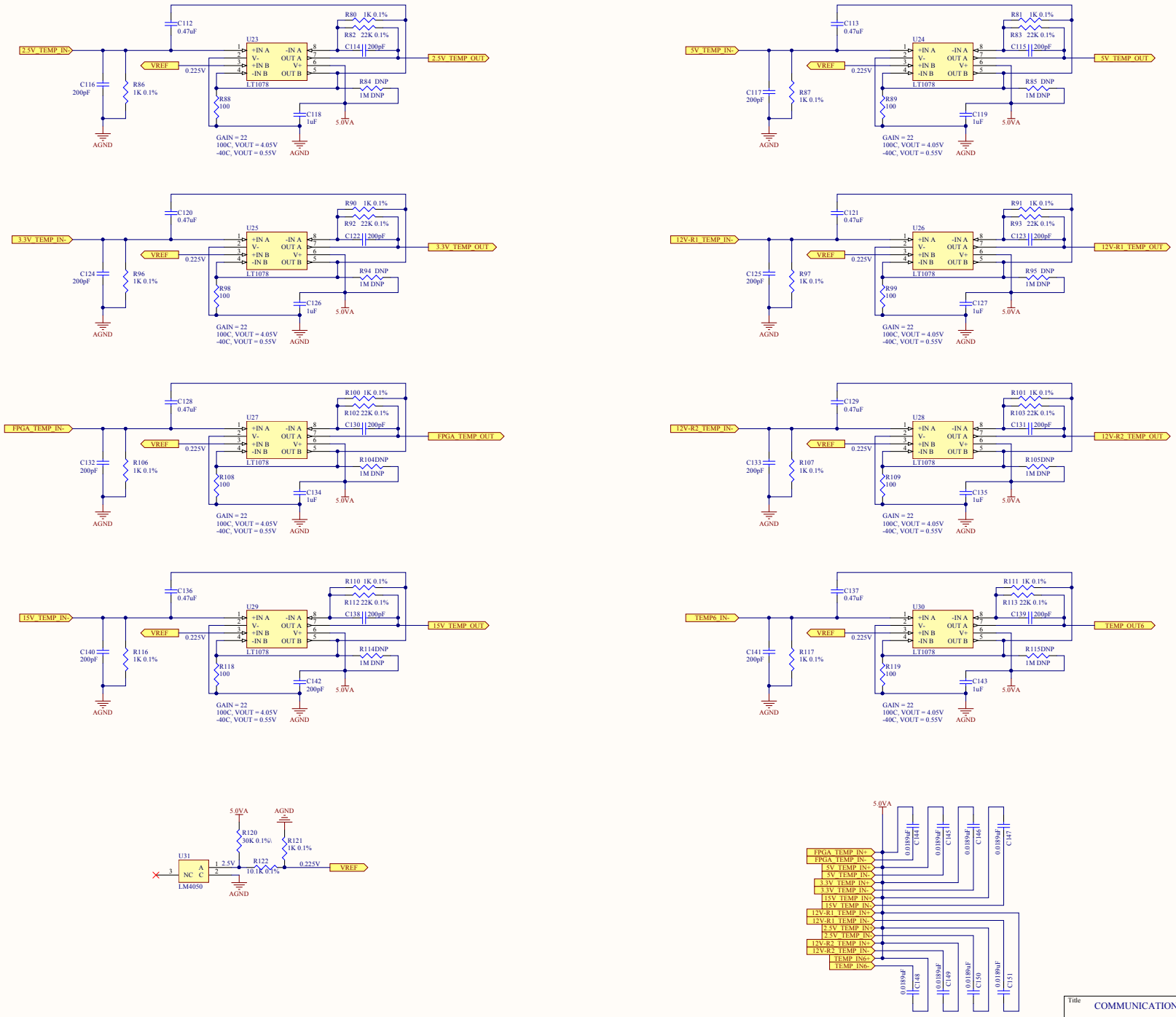

Title	COMMUNICATIONS CARRIER BOARD SCHEMATIC	
Size C	Number	Revision
Date: 7/23/2015		Sheet of
File: C:\Odin_local_backup\...\Comm CB Temp Sensor.SchDoc		Drawn By:

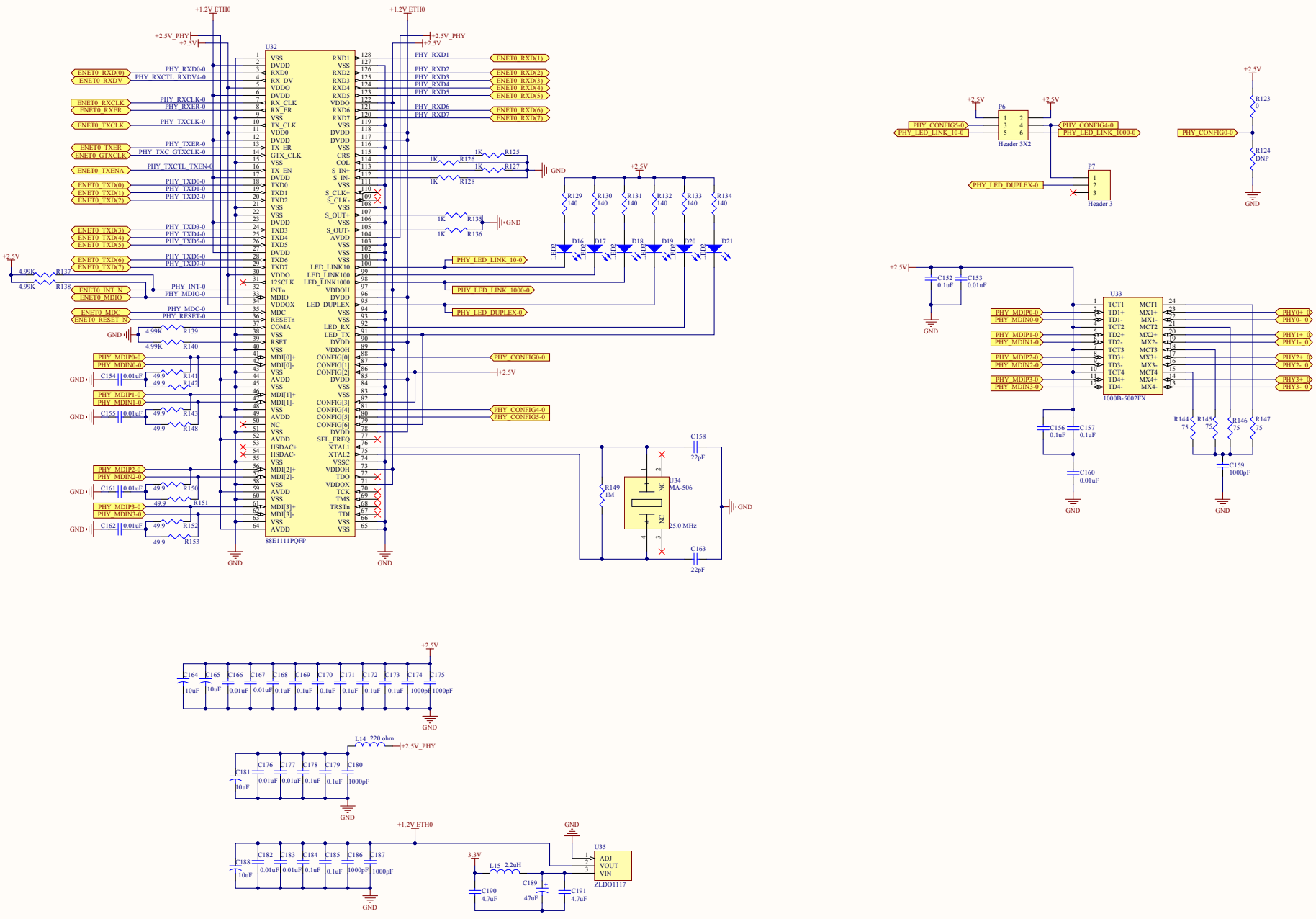

Title: COMMUNICATIONS CARRIER BOARD SCHEMATIC

Size	Number	Revision
C		

Date: 7/23/2015 Sheet of

File: C:\Odin_local_backup\...\Comm DB Ethernet.SchDoc

COMM INTERFACES TO CWS

LVDS ISOLATION JUMPERS
JUMPER PINS 1 TO 2 FOR NO ISOLATION
JUMPER PINS 1 TO 3 & 2 TO 4 FOR ISOLATED LINK

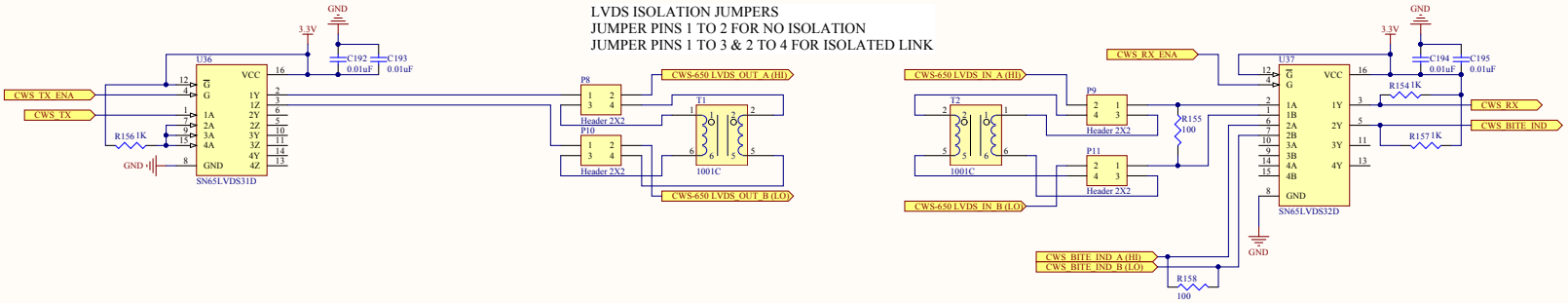

COMM INTERFACES TO INFORMATICS

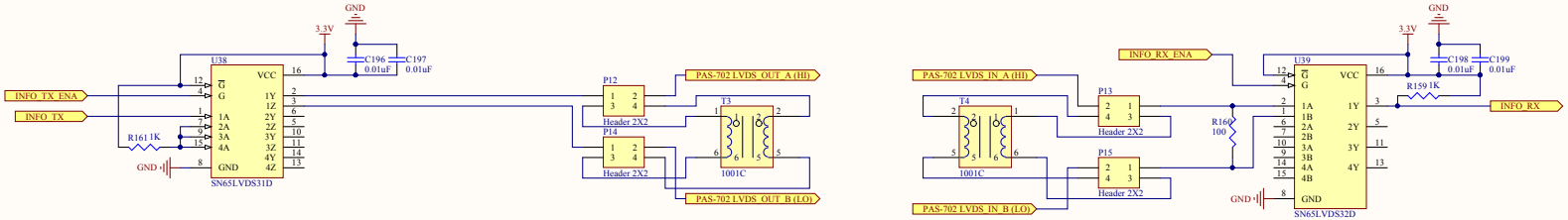

Title	COMMUNICATIONS CARRIER BOARD SCHEMATIC	
Size C	Number	Revision
Date: 7/23/2015	Sheet of	
File: C:\Odin_local_backup\..\Comm DB LVDS.SchDoc	Drawn By:	

XRM CONNECTOR TO FPGA

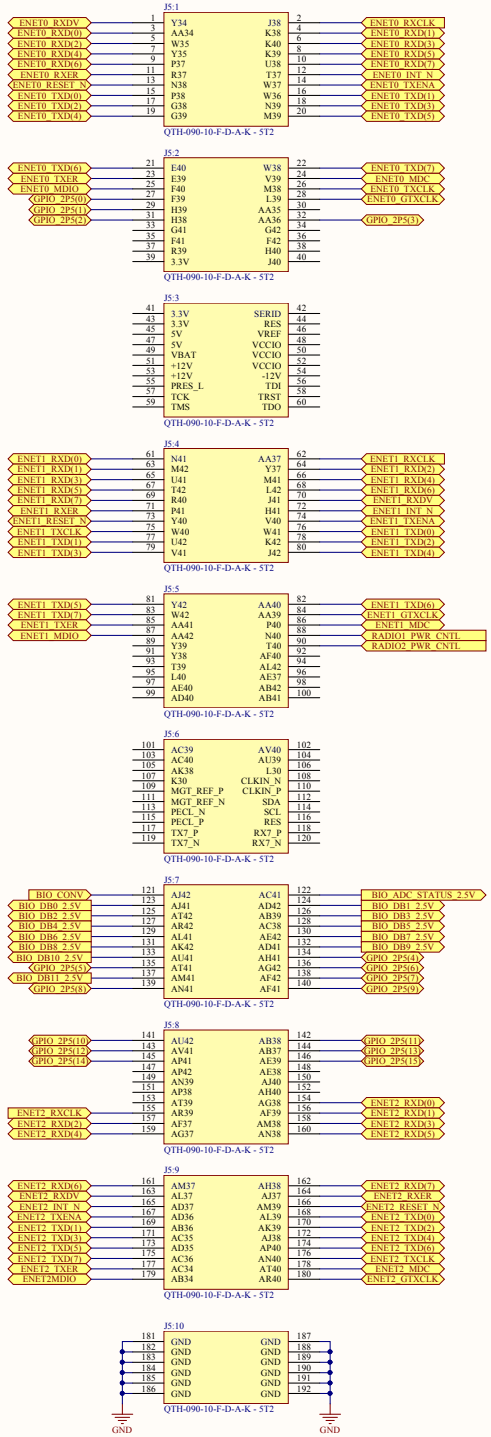

PMC USER IO TO FPGA

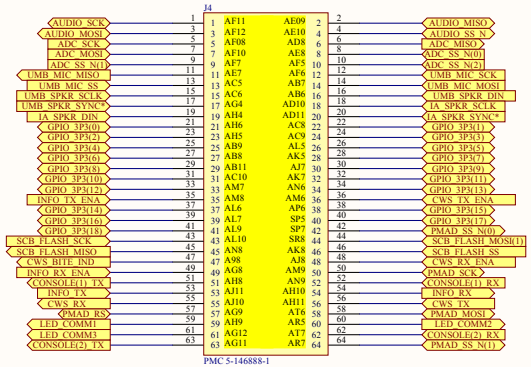

Title: COMMUNICATIONS CARRIER BOARD SCHEMATIC		
Size: C	Number	Revision
Date: 7/23/2015		Sheet of
File: C:\Odin_local_backup\...\Comm DB PMC.SchDoc		Drawn By:

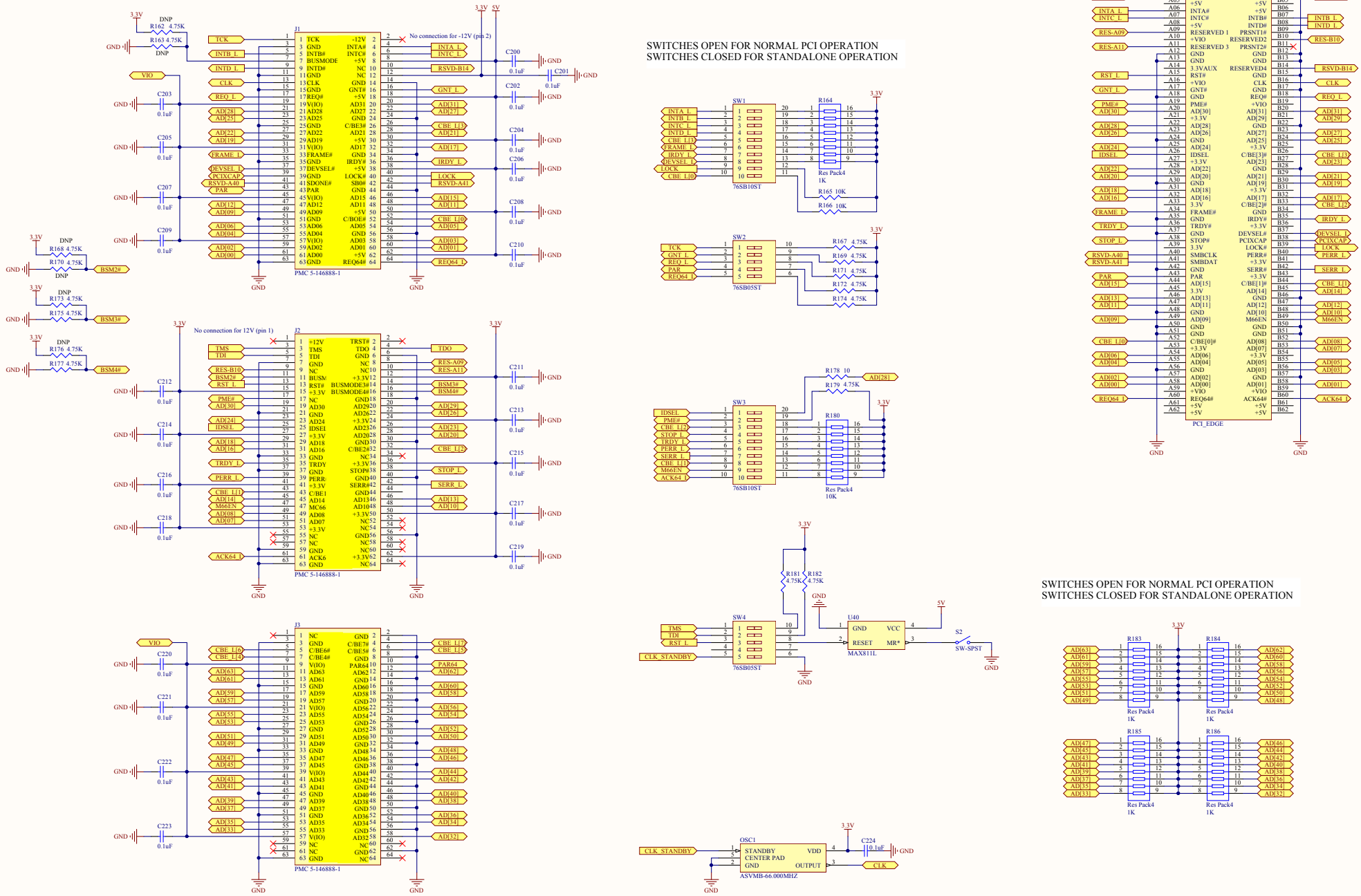

SWITCHES OPEN FOR NORMAL PCI OPERATION
SWITCHES CLOSED FOR STANDALONE OPERATION

Title	COMMUNICATIONS CARRIER BOARD SCHEMATIC	
Size C	Number	Revision
Date: 7/23/2015		Sheet of
File: C:\Odin_local_backup\...\Comm DB PMC.SchDoc		Drawn By:

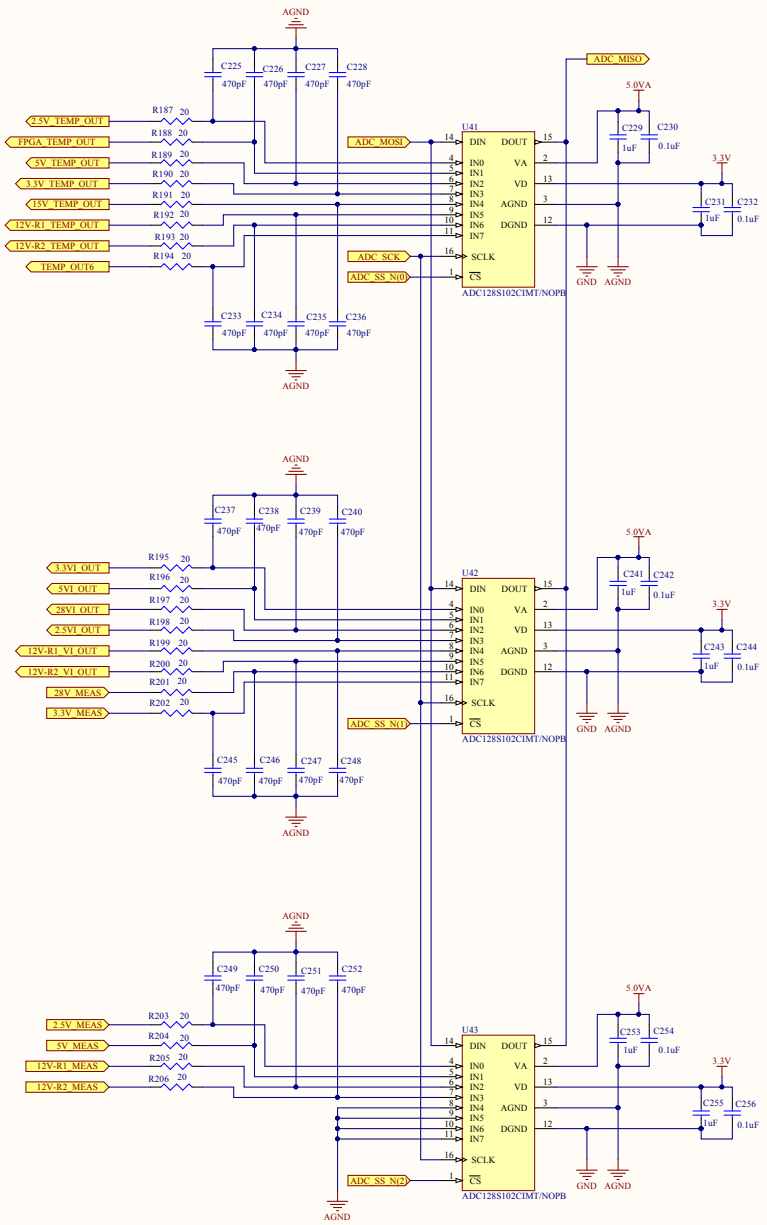

Title	COMMUNICATIONS CARRIER BOARD SCHEMATIC	
Size C	Number	Revision
Date: 7/23/2015	Sheet of	
File: C:\Odin_local_backup\...\Comm DB Sensor.SchDoc	Drawn By:	

Comment	Description	Designator	Footprint	LibRef	Quantity	Value
Cap	Capacitor	C1, C2, C3, C4, C7, C12, C13, C14, C23, C24, C25, C26, C46, C47, C48, C50, C51, C55, C56, C60, C66, C71, C72, C87, C88, C89, C90, C91, C92, C93, C103, C161, C164, C162, C166, C167, C171, C177, C181, C183, C192, C193, C194, C195, C196, C197, C198, C199, C200, C201, C202, C203, C204, C205	RAD-0.3	Cap	59	0.01uF
Cap	Capacitor	C206, C207	RAD-0.3	Cap	2	0.1uF
Cap	Capacitor	C5, C9, C10, C11, C16, C19, C20, C21, C22, C27, C28, C31, C34, C41, C43, C44, C47, C50, C57, C58, C59, C60, C61, C62, C63, C70, C74, C76, C82, C84, C85, C86, C87, C88, C89, C90, C91, C92, C93, C94, C95, C96, C97, C98, C99, C100, C101, C102, C106, C107, C108, C109, C110, C111, C112, C116, C117, C118, C119, C120, C121, C122, C123, C124, C125, C126, C127, C128, C129, C130, C131, C132, C133, C134, C135, C136, C137, C138, C139, C140, C141, C142, C143, C144, C145, C146, C147, C148, C149, C150, C151, C152, C153, C154, C155, C156, C157, C158, C159, C160, C162, C163, C164, C165, C166, C167, C168, C169, C170, C171, C172, C173, C174, C175, C176, C177, C178, C179, C180, C181, C182, C183, C184, C185, C186, C187, C188, C189, C190, C191, C192, C193, C194, C195, C196, C197, C198, C199, C200, C201, C202, C203, C204, C205, C206, C207, C208, C209, C210, C211, C212, C213, C214, C215, C216, C217, C218, C219, C220, C221, C222, C223, C224, C225, C226, C227, C228, C229, C230, C231, C232, C233, C234, C235, C236, C237, C238, C239, C240, C241, C242, C243, C244, C245, C246, C247, C248, C249, C250, C251, C252, C253	RAD-0.3	Cap	93	0.1uF
Cap	Capacitor	C52, C53, C54, C55, C56, C57, C58, C59, C60, C61, C62, C63, C64, C65, C66, C67, C68, C69, C70, C71, C72, C73, C74, C75, C76, C77, C78, C79, C80, C81, C82, C83, C84, C85, C86, C87, C88, C89, C90, C91, C92, C93, C94, C95, C96, C97, C98, C99, C100, C101, C102, C103, C104, C105, C106, C107, C108, C109, C110, C111, C112, C113, C114, C115, C116, C117, C118, C119, C120, C121, C122, C123, C124, C125, C126, C127, C128, C129, C130, C131, C132, C133, C134, C135, C136, C137, C138, C139, C140, C141, C142, C143, C144, C145, C146, C147, C148, C149, C150, C151, C152, C153	RAD-0.3	Cap	102	0.01uF
Cap2	Capacitor	C54, C64, C75, C77, C164, C165, C185, C188	CAPR5-4W5	Cap2	12	10uF
Cap PolS	Polarized Capacitor (Radial)	C38, C78, C96, C97, C101, C102, C107, C108, C189, C192, C193, C194, C195, C197, C207, C208, C209, C212	RB7.6-15	Cap PolS	16	47uF
Cap	Capacitor	C39, C40, C79, C80, C98, C103, C109, C198, C201, C210, C211	RAD-0.3	Cap	13	0.1uF
Cap	Capacitor	C81, C99, C118, C119, C120, C121, C140, C228, C231, C241, C242, C243, C250, C278, C280	RAD-0.3	Cap	12	1uF
Cap PolS	Polarized Capacitor (Radial)	C91	RB7.6-15	Cap PolS	1	47uF
Cap	Capacitor	C95, C99	RAD-0.3	Cap	2	0.1uF
Cap PolS	Polarized Capacitor (Radial)	C105	RB7.6-15	Cap PolS	1	1uF
Cap	Capacitor	C114, C115, C116, C121, C128, C129, C134, C137	RAD-0.3	Cap	8	0.47uF
Cap	Capacitor	C114, C115, C116, C117, C127, C132, C133, C134, C135, C138, C139, C140, C141, C142, C143, C144, C145, C146, C147, C148, C149, C150	RAD-0.3	Cap	17	560pF
Cap	Capacitor	C144, C145, C146, C147, C148, C149, C151, C152	RAD-0.3	Cap	8	0.068uF
Cap	Capacitor	C229, C230, C237, C238, C239, C240, C241, C242, C243, C244, C245, C246, C247, C248, C249, C250, C251, C252, C253	RAD-0.3	Cap	21	470pF
LED2	Typical RED, GREEN, YELLOW, AMBER Auto LED	D1, D2, D3, D4, D5, D6, D7, D8, D9, D10, D11, D12, D13, D14, D15, D16, D17, D18, D19, D20, D21, D22, D23, D24	T-2KL-JDL-1	LED2	18	
LED3	Typical INFRARED Auto LED	D25, D26, D15	LED-0	LED3	3	
PMC S-146888-1	Header, 7-Pin, Dual Row	J1, J2, J3, J4		PMC S-146888-1	4	
QTH-090-01-F-D-A-K-TR		J5		QTH-090-01-F-D-A-K-TR	1	
PCI2EXG		J6, J7		PCI2EXG	2	
EthUBCN		J8		EthUBCN	1	
Header 7X2	Header, 7-Pin, Dual Row	J9	HDR2X7	Header 7X2	1	
PCI_EDGE		J10		PCI_EDGE	1	
EthUBCN		J11		EthUBCN	1	
Inductor	Inductor	L1, L3, L24	0402-A	Inductor	3	120 ohm
Inductor	Inductor	L2, L4, L7, L10, L13, L15, L17, L19	0402-A	Inductor	8	62nH
Inductor	Inductor	L5, L8	0402-A	Inductor	2	100nH
Inductor	Inductor	L6, L9, L12, L14, L16, L18	0402-A	Inductor	6	5nH
Inductor	Inductor	L20	0402-A	Inductor	1	10nH
101N48-6L3030M4		L21		101N48-6L3030M4	1	
Header 2X2	Header, 2-Pin, Dual Row	P1, P3, P6	HDR2X2	Header 2X2	3	
Header 3	Header, 3-Pin	P2, P4, P5	HDR1X3	Header 3	3	
Header 2X2	Header, 2-Pin, Dual Row	P7, P8, P9, P10, P11, P12, P13, P14, P15, P16, P17, P18	HDR2X2	Header 2X2	12	
Res2	Resistor	R1, R2, R3, R4, R5, R11, R14, R15, R16, R17, R27, R44, R45, R46, R47, R51, R52, R53, R54, R55, R56, R57, R58, R59, R60, R61, R62, R63, R64, R65, R66, R67, R68, R69, R70, R71, R72, R73, R74, R75, R76, R77, R78, R79, R80, R81, R82, R83, R84, R85, R86, R87, R88, R89, R90, R91, R92, R93, R94, R95, R96, R97, R98, R99, R100, R101, R102, R103, R104, R105, R106, R107, R108, R109, R110, R111, R112, R113, R114, R115, R116, R117, R118, R119, R120, R121, R122, R123, R124, R125, R126, R127, R128, R129, R130, R131, R132, R133, R134, R135, R136, R137, R138, R139, R140, R141, R142, R143, R144, R145, R146, R147, R148, R150, R151, R152, R153, R154, R155, R156, R157, R158, R159, R160, R161, R162, R163, R164, R165, R166, R167, R168, R169, R170, R171, R172, R173, R174, R175, R176, R177, R178, R179, R180, R181, R182, R183, R184, R185, R186, R187, R188, R189, R190, R191, R192, R193, R194, R195, R196, R197, R198, R199, R200, R201, R202, R203, R204, R205, R206, R207, R208, R209, R210, R211, R212, R213, R214, R215, R216, R217, R218, R219, R220, R221, R222, R223, R224, R225, R226, R227	0-0603	Res2	204	4.7K
Res2	Resistor	R228, R229, R230, R231, R232, R233, R234, R235, R236, R237, R238, R239, R240, R241, R242, R243, R244, R245, R246, R247, R248, R249, R250, R251, R252, R253, R254, R255, R256, R257, R258, R259, R260, R261, R262, R263, R264, R265, R266, R267, R268, R269, R270, R271, R272, R273, R274, R275, R276, R277, R278, R279, R280, R281, R282, R283, R284, R285, R286, R287, R288, R289, R290, R291, R292, R293, R294, R295, R296, R297, R298, R299, R300, R301, R302, R303, R304, R305, R306, R307, R308, R309, R310, R311, R312, R313, R314, R315, R316, R317, R318, R319, R320, R321, R322, R323, R324, R325, R326, R327, R328, R329, R330, R331, R332, R333, R334, R335, R336, R337, R338, R339, R340, R341, R342, R343, R344, R345, R346, R347, R348, R349, R350, R351, R352, R353, R354, R355, R356, R357, R358, R359, R360, R361, R362, R363, R364, R365, R366, R367, R368, R369, R370, R371, R372, R373, R374, R375, R376, R377, R378, R379, R380, R381, R382, R383, R384, R385, R386, R387, R388, R389, R390, R391, R392, R393, R394, R395, R396, R397, R398, R399, R400, R401, R402, R403, R404, R405, R406, R407, R408, R409, R410, R411, R412, R413, R414, R415, R416, R417, R418, R419, R420, R421, R422, R423, R424, R425, R426, R427	0-0603	Res2	427	10K
Res2	Resistor	R428, R429, R430, R431, R432, R433, R434, R435, R436, R437, R438, R439, R440, R441, R442, R443, R444, R445, R446, R447, R448, R449, R450, R451, R452, R453, R454, R455, R456, R457, R458, R459, R460, R461, R462, R463, R464, R465, R466, R467, R468, R469, R470, R471, R472, R473, R474, R475, R476, R477, R478, R479, R480, R481, R482, R483, R484, R485, R486, R487, R488, R489, R490, R491, R492, R493, R494, R495, R496, R497, R498, R499, R500, R501, R502, R503, R504, R505, R506, R507, R508, R509, R510, R511, R512, R513, R514, R515, R516, R517, R518, R519, R520, R521, R522, R523, R524, R525, R526, R527, R528, R529, R530, R531, R532, R533, R534, R535, R536, R537, R538, R539, R540, R541, R542, R543, R544, R545, R546, R547, R548, R549, R550, R551, R552, R553, R554, R555, R556, R557, R558, R559, R560, R561, R562, R563, R564, R565, R566, R567, R568, R569, R570, R571, R572, R573, R574, R575, R576, R577, R578, R579, R580, R581, R582	0-0603	Res2	582	4.7K
Res Pack4	Isolated Resistor Network	R584, R585, R586, R587, R588	SIP16_N	Res Pack4	5	1K
Res2	Resistor	R589, R590	0-0603	Res2	2	10K
Res2	Resistor	R591	0-0603	Res2	1	1K
Res Pack4	Isolated Resistor Network	R592	SIP16_N	Res Pack4	1	10K
Res2	Resistor	R593, R594, R595, R596, R597, R598, R599, R600, R601, R602, R603, R604, R605, R606, R607, R608, R609, R610, R611, R612, R613, R614, R615, R616, R617, R618, R619, R620, R621, R622, R623, R624, R625, R626, R627, R628, R629, R630, R631, R632, R633, R634, R635, R636, R637, R638, R639, R640, R641, R642, R643, R644, R645, R646, R647, R648, R649, R650, R651, R652, R653, R654, R655, R656, R657, R658, R659, R660, R661, R662, R663, R664, R665, R666, R667, R668, R669, R670, R671, R672, R673, R674, R675, R676, R677, R678, R679, R680, R681, R682, R683, R684, R685, R686, R687, R688, R689, R690, R691, R692, R693, R694, R695, R696, R697, R698, R699, R700, R701, R702, R703, R704, R705, R706, R707, R708, R709, R710, R711, R712, R713, R714, R715, R716, R717, R718, R719, R720, R721, R722, R723, R724, R725, R726, R727, R728, R729, R730, R731, R732, R733, R734, R735, R736, R737, R738, R739, R740, R741, R742, R743, R744, R745, R746, R747, R748, R749, R750, R751, R752, R753, R754, R755, R756, R757, R758, R759, R760, R761, R762, R763, R764, R765, R766, R767, R768, R769, R770, R771, R772, R773, R774, R775, R776, R777, R778, R779, R780, R781, R782, R783, R784, R785, R786, R787, R788, R789, R790, R791, R792, R793, R794, R795, R796, R797, R798, R799, R800, R801, R802, R803, R804, R805, R806, R807, R808, R809, R810, R811, R812, R813, R814, R815, R816, R817, R818, R819, R820, R821, R822, R823, R824, R825, R826, R827, R828, R829, R830, R831, R832, R833, R834, R835, R836, R837, R838, R839, R840, R841, R842, R843, R844, R845, R846, R847, R848, R849, R850, R851, R852, R853, R854, R855, R856, R857, R858, R859, R860, R861, R862, R863, R864, R865, R866, R867, R868, R869, R870, R871, R872, R873, R874, R875, R876, R877, R878, R879, R880, R881, R882, R883, R884, R885, R886, R887, R888, R889, R890, R891, R892, R893, R894, R895, R896, R897, R898, R899, R900, R901, R902, R903, R904, R905, R906, R907, R908, R909, R910, R911, R912, R913, R914, R915, R916, R917, R918, R919, R920, R921, R922, R923, R924, R925, R926, R927, R928, R929, R930, R931, R932, R933, R934, R935, R936, R937, R938, R939, R940, R941, R942, R943, R944, R945, R946, R947, R948, R949, R950, R951, R952, R953, R954, R955, R956, R957, R958, R959, R960, R961, R962, R963, R964, R965, R966, R967, R968, R969, R970, R971, R972, R973, R974, R975, R976, R977, R978, R979, R980, R981, R982	0-0603	Res2	982	1K
Res2	Resistor	R983, R984, R985, R986, R987, R988, R989, R990, R991, R992, R993, R994, R995, R996, R997, R998, R999, R1000, R1001, R1002, R1003, R1004, R1005, R1006, R1007, R1008, R1009, R1010, R1011, R1012, R1013, R1014, R1015, R1016, R1017, R1018, R1019, R1020, R1021, R1022, R1023, R1024, R1025, R1026, R1027, R1028, R1029, R1030, R1031, R1032, R1033, R1034, R1035, R1036, R1037, R1038, R1039, R1040, R1041, R1042, R1043, R1044, R1045, R1046, R1047, R1048, R1049, R1050, R1051, R1052, R1053, R1054, R1055, R1056, R1057, R1058, R1059, R1060, R1061, R1062, R1063, R1064, R1065, R1066, R1067, R1068, R1069, R1070, R1071, R1072, R1073, R1074, R1075, R1076, R1077, R1078, R1079, R1080	0-0603	Res2	1080	10K
Res2	Resistor	R1081, R1082, R1083, R1084, R1085, R1086, R1087, R1088, R1089, R1090, R1091, R1092, R1093, R1094, R1095, R1096, R1097, R1098, R1099, R1100, R1101, R1102, R1103, R1104, R1105, R1106, R1107, R1108, R1109, R1110, R1111, R1112, R1113, R1114, R1115, R1116, R1117, R1118, R1119, R1120, R1121, R1122, R1123, R1124, R1125, R1126, R1127, R1128, R1129, R1130, R1131, R1132, R1133, R1134, R1135, R1136, R1137, R1138, R1139, R1140, R1141, R1142, R1143, R1144, R1145, R1146, R1147, R1148, R1149, R1150, R1151, R1152, R1153, R1154, R1155, R1156, R1157, R1158, R1159, R1160, R1161, R1162, R1163, R1164, R1165, R1166, R1167, R1168, R1169, R1170, R1171, R1172, R1173, R1174, R1175, R1176, R1177, R1178, R1179, R1180, R1181, R1182, R1183, R1184, R1185, R1186, R1187, R1188, R1189, R1190, R1191, R1192, R1193, R1194, R1195, R1196, R1197, R1198, R1199, R1200, R1201, R1202, R1203, R1204, R1205, R1206, R1207, R1208, R1209, R1210, R1211, R1212, R1213, R1214, R1215, R1216, R1217, R1218, R1219, R1220, R1221, R1222, R1223, R1224, R1225, R1226, R1227, R1228, R1229, R1230, R1231, R1232, R1233, R1234, R1235, R1236, R1237, R1238, R1239, R1240, R1241, R1242, R1243, R1244, R1245, R1246, R1247, R1248, R1249, R1250, R1251, R1252, R1253, R1254, R1255, R1256, R1257, R1258, R1259, R1260, R1261, R1262, R1263, R1264, R1265, R1266, R1267, R1268, R1269, R1270, R1271, R1272, R1273, R1274, R1275, R1276, R1277, R1278, R1279, R1280	0-0603	Res2	1280	10K
Res Pack4	Isolated Resistor Network	R1281, R1282, R1283, R1284, R1285, R1286, R1287, R1288, R1289, R1290, R1291, R1292, R1293, R1294, R1295, R1296, R1297, R1298, R1299, R1300, R1301, R1302, R1303, R1304, R1305, R1306, R1307, R1308, R1309, R1310, R1311, R1312, R1313, R1314, R1315, R1316, R1317, R1318, R1319, R1320, R1321, R1322, R1323, R1324, R1325, R1326, R1327, R1328, R1329, R1330, R1331, R1332, R1333, R1334, R1335, R1336, R1337, R1338, R1339, R1340, R1341, R1342, R1343, R1344, R1345, R1346, R1347, R1348, R1349, R1350, R1351, R1352, R1353, R1354, R1355, R1356, R1357, R1358, R1359, R1360, R1361, R1362, R1363, R1364, R1365, R1366, R1367, R1368, R1369, R1370, R1371, R1372, R1373, R1374, R1375, R1376, R1377, R1378, R1379, R1380	SIP16_N	Res Pack4	1380	10K
Res2	Resistor	R1381, R1382, R1383, R1384, R1385, R1386, R1387, R1388, R1389, R1390, R1391, R1392, R1393, R1394, R1395, R1396, R1397, R1398, R1399, R1400, R1401, R1402, R1403, R1404, R1405, R1406, R1407, R1408, R1409, R1410, R1411, R1412, R1413, R1414, R1415, R1416, R1417, R1418, R1419, R1420, R1421, R1422, R1423, R1424, R1425, R1426, R1427, R1428, R1429, R1430, R1431, R1432, R1433, R1434, R1435, R1436, R1437, R1438, R1439, R1440, R1441, R1442, R1443, R1444, R1445, R1446, R1447, R1448, R1449, R1450, R1451, R1452, R1453, R1454, R1455, R1456, R1457, R1458, R1459, R1460, R1461, R1462, R1463, R1464, R1465, R1466, R1467, R1468, R1469, R1470, R1471, R1472, R1473, R1474, R1475, R1476, R1477, R1478, R1479, R1480	0-0603	Res2	1480	10K
Res2	Resistor	R1481, R1482, R1483, R1484, R1485, R1486, R1487, R1488, R1489, R1490, R1491, R1492, R1493, R1494, R1495, R1496, R1497, R1498, R1499, R1500, R1501, R1502, R1503, R1504, R1505, R1506, R1507, R1508, R1509, R1510, R1511, R1512, R1513, R1514, R1515, R1516, R1517, R1518, R1519, R1520, R1521, R1522, R1523, R1524, R1525, R1526, R1527, R1528, R1529, R1530, R1531, R1532, R1533, R1534, R1535, R1536, R1537, R1538, R1539, R1540, R1541, R1542, R1543, R1544, R1545, R1546, R1547, R1548, R1549, R1550, R1551, R1552, R1553, R1554, R1555, R1556, R1557, R1558, R1559, R1560, R1561, R1562, R1563, R1564, R1565, R1566, R1567, R1568, R1569, R1570, R1571, R1572, R1573, R1574, R1575, R1576, R1577, R1578, R1579, R1580	0-0603	Res2	1580	10K
Res2	Resistor	R1581, R1582, R1583, R1584, R1585, R1586, R1587, R1588, R1589, R1590, R1591, R1592, R1593, R1594, R1595, R1596, R1597, R1598, R1599, R1600, R1601, R1602, R1603, R1604, R1605, R1606, R1607, R1608, R1609, R1610, R1611, R1612, R1613, R1614, R1615, R1616, R1617, R1618, R1619, R1620, R1621, R1622, R1623, R1624, R1625, R1626, R1627, R1628, R1629, R1630, R1631, R1632, R1633, R1634, R1635, R1636, R1637, R1638, R1639, R1640, R1641, R1642, R1643, R1644, R1645, R1646, R1647, R1648, R1649, R1650, R1651, R1652, R1653, R1654, R1655, R1656, R1657, R1658, R1659, R1660, R1661, R1662, R1663, R1664, R1665, R1666, R1667, R1668, R1669, R1670, R1671, R1672, R1673, R1674, R1675, R1676, R1677, R1678, R1679, R1680	0-0603	Res2	1680	10K
Res2	Resistor	R1681, R1682, R1683, R1684, R1685, R1686, R1687, R1688, R1689, R1690, R1691, R1692, R1693, R1694, R1695, R1696, R1697, R1698, R1699, R1700, R1701, R1702, R1703, R1704, R1705, R1706, R1707, R1708, R1709, R1710, R1711, R1712, R1713, R1714, R1715, R1716, R1717, R1718, R1719, R1720, R1721, R1722, R1723, R1724, R1725, R1726, R1727, R1728, R1729, R1730, R1731, R1732, R1733, R1734, R1735, R1736, R1737, R1738, R1739, R1740, R1741, R1742, R1743, R1744, R1745, R1746, R1747, R1748, R1749, R1750, R1751, R1752, R1753, R1754, R1755, R1756, R1757, R1758, R1759, R1760, R1761, R1762, R1763, R1764, R1765, R1766, R1767, R1768, R1769, R1770, R1771, R1772, R1773, R1774, R1775, R1776, R1777, R1778, R1779, R1780	0-0603	Res2	1780	10K
Res2	Resistor	R1781, R1782, R1783, R1784, R1785, R1786, R1787, R1788, R1789, R1790, R1791, R1792, R1793, R1794, R1795, R1796, R1797, R1798, R1799, R1800, R1801, R1802, R1803, R1804, R1805, R1806, R1807, R1808, R1809, R1810, R1811, R1812, R1813, R1814, R1815, R1816, R1817, R1818, R1819, R1820, R1821, R1822, R1823, R1824, R1825, R1826, R1827, R1828, R1829, R1830, R1831, R1832, R1833, R1834, R1835, R1836, R1837, R1838, R1839, R1840, R1841, R1842, R1843, R1844, R1845, R1846, R1847, R1848, R1849, R1850, R1851, R1852, R1853, R1854, R1855, R1856, R1857, R1858, R1859, R1860, R1861, R1862, R1863, R1864, R1865, R1866, R1867, R1868, R1869, R1870, R1871, R1872, R1873, R1874, R1875, R1876, R1877, R1878, R1879, R1880	0-0603	Res2	1880	10K
Res2	Resistor	R1881, R1882, R1883, R1884, R1885, R1886, R1887, R1888, R1889, R1890, R1891, R1892, R1893, R1894, R1895, R1896, R1897, R1898, R1899, R1900, R1901, R1902, R1903, R1904, R1905, R1906, R1907, R1908, R1909, R1910, R1911, R1912, R1913, R1914, R1915, R1916, R1917, R1918, R1919, R1920, R1921, R1922, R1923, R1924, R1925, R1926, R1927, R1928, R1929, R1930, R1931, R1932, R1933, R1934, R1935, R1936, R1937, R1938, R1939, R1940, R1941, R1942, R1943, R1944, R1945, R1946, R1947, R1948, R1949, R1950, R1951, R1952, R1953, R1954, R1955, R1956, R1957, R1958, R1959, R1960, R1961, R1962, R1963, R1964, R1965, R1966, R1967, R1968, R1969, R1970, R1971, R1972, R1973, R1974, R1975, R1976, R1977, R1978, R1979, R1980	0-0603	Res2	1980	10K
Res2	Resistor	R1981, R1982, R1983, R1984, R1985, R1986, R1987, R1988, R1989, R1990, R1991, R1992, R1993, R1994, R1995, R1996, R1997, R1998, R1999, R2000, R2001, R2002, R2003, R2004, R2005, R2006, R2007, R2008, R2009, R2010, R2011, R2012, R2013, R2014, R2015, R2016, R2017, R2018, R2019, R2020, R2021, R2022, R2023, R2024, R2025, R2026, R2027, R2028, R2029, R2030, R2031, R2032, R2033, R2034, R2035, R2036, R2037, R2038, R2039, R2040, R2041, R2042, R2043, R2044, R2045, R2046, R2047, R2048, R2049, R2050, R2051, R2052, R2053, R2054, R2055, R2056, R2057, R2058, R2059, R2060, R2061, R2062, R2063, R2064, R2065, R2066, R2067, R2068, R2069, R2070, R2071, R2072, R2073, R2074, R2075, R2076, R2077, R2078, R2079, R2080	0-0603	Res2	2080	10K
Sw-SPST	Single Pole, Single Throw Switch	S1, S2	SPST-2	SW-SPST	2	
74ABU257		SM1, SM3		74ABU257	2	
74ABU257		SM2, SM4		74ABU257	2	
SI8232		S1, S2, S3, S4		SI8232	4	
IS61LV1024P		U1, U5, U12		IS61LV1024P	3	
101N8-S0G2F4		U2, U6, U13		101N8-S0G2F4	3	
MA-506		U3, U7, U14		MA-506	3	
SLDO1117		U4, U8, U15		SLDO1117	3	
MAX3222		U9		MAX3222	1	
NJ7IQ31U4		U10		NJ7IQ31U4	1	
74AC04		U11		74AC04	1	
SL18F76L		U12		SL18F76L	1	
SN65LVDS31D	Qp-bitPeripl Differential Line Driver	U13, U16, U18	SO16_L	SN65LVDS31D	3	
74AC32		U14		74AC32	1	
SJ4818R2		U15		SJ4818R2	1	
AD8210		U16, U19, U21, U22, U23, U26		AD8210	6	
MAX4051DDC		U17		MAX4051DDC	1	
SJ4818F60		U18		SJ4818F60	1	
AVAGSL24-L		U20		AVAGSL24-L	1	
LT6078		U24, U25, U25, U26, U27, U28, U29, U30		LT6078	8	
SAA9850		U31		SAA9850	1	
SN65LVDS32D	Qp-bitPeripl Differential Line Receiver	U32, U36	SO16_L	SN65LVDS32D	2	
MAX8511L		U33		MAX8511L	1	
ADC12B510CIMTD/NOPB	12-Bit plus Sign, 10MSPS to 1 MSPS, 12-Bit A/D Converter, 48-pin TSSOP, Pb-Free	U34, U42, U43, U50	MTC56_N	ADC12B510CIMTD/NOPB	4	
SJ4818120GPDFA		U44, U47		SJ4818120GPDFA	2	
74HR GPTD		U46, U49		74HR GPTD	2	
74AHC244		U50, U52		74AHC244	2	
AD5764A		U51		AD5764A	1	
74AC161G01		U53, U54		74AC161G01	2	