NASA Ames Research Center
Moffett Field, CA 94035

Request For Information

This is a National Aeronautics and Space Administration (NASA) Ames Research Center (ARC) Request For Information (RFI). It is emphasized that the requested information is for preliminary planning purposes only and does not constitute a commitment, implied or otherwise, that NASA will solicit for such a procurement in the future. The Government is not responsible for any costs incurred in furnishing this information.

NASA is issuing this Request For Information (RFI) to request industry input on the availability and capability of heatflux sensors in heatflux ranges (0 – 15) W/cm^2 to support the Mars Entry, Descent, and Landing Instrumentation 2 (MEDLI2) experiment on the Mars 2020 mission.

The second Mars Entry, Descent and Landing Instrumentation (MEDLI2) experiment will measure both pressures and temperatures on the protective heatshield during entry as was done on the original MEDLI experiment on the Mars Science Laboratory mission. Additionally, with MEDLI2 on Mars 2020, emphasis will be placed on capturing heatflux measurements on the backshell. These measurements will help improve NASA's knowledge of EDL performance and reduce uncertainties in backshell heating.

NASA is anticipating that three (3) heatflux sensors will be installed on the Mars 2020 backshell. Results of recent analyses indicate that measurements in the 0 – 15 W/cm^2 are required for the backshell heatflux measurements.

Before flight, each heatflux sensor will go through rigorous testing that consists of ambient and thermal calibrations, and environmental tests consisting of static acceleration, vibration, thermal vacuum, and simulated entry heating in an arc jet. These sensors need to be rugged and provide high rate, high accuracy output with low input power requirements. The sensor must also withstand over-heating, accelerations and flight vibration, and a wide temperature range while providing low-level errors.

Additional nominal specification requirements are contained in Attachment 1, Nominal Specifications for the MEDLI2 Heatflux Sensor. NASA encourages each respondent to thoroughly review Attachment 1 prior to responding to the RFI.

RFI Submittals: Interested parties should respond with the following information:

1. General Description

    a. Describe the sensors capability to the requirements and guidelines in Attachment 1; specifically noting any areas of noncompliance and recommendations to mitigate or correct the noncompliance; including changes to the requirements themselves.

2. Flight or Technology Heritage/Qualification

    a. Describe the company's relevant experience with manufacturing heatflux sensors; especially experience with space flight qualified hardware as described above.
    b. Describe the extent to which existing proven commercial technology can be leveraged to minimize technical and schedule risk.
    c. Describe any new technologies to be employed on this effort, and any modifications to existing technology necessary to meet the requirements. Describe risks associated with incorporating the new or modified technology and how the risks can be minimized.

3. Test and Inspection Program

    a. What test program(s) or evidence could be offered to demonstrate that the heatflux sensor will meet the requirements and specifications provided in Attachment 1.

    b. For any field testing, describe in some detail the conditions of the test, the test objectives, and any results.

    c. Submit a sample of existing manufacturing, inspection and test, and acceptance plans to control this type of work, and list any current International Standards Organization (ISO) certifications or equivalent.

    d. Describe whether the sensor is qualified for flight and if so, describe the qualification program including environments used (e.g., against a military standard (MIL-SPEC). or other).

    e. Describe how the accuracy of the sensor is demonstrated, including any testing required to achieve the characterization and examples of how this was performed on past projects.

    f. It is anticipated that a passive thermal heatsink system will be necessary. Describe implementation on previous missions, and integration (i.e. heatsink thermocouples, internal RTD, other), and testing (additional thermal calibrations, others).

4. Sensor Mechanical Mount approach

    a. It is anticipated that the heatflux sensors will have the capability of integrating via a 3-point mechanical mounting similar to that shown in Figure 3 of Attachment 1. Submit or provide a description of a sensor mounting scheme if otherwise.

5. Costs

    a. If the sensor (s) device has undergone a flight qualification for a similar application (or has the capability to undergo one as it is currently designed), please provide Rough Order of Magnitude (ROM) costs to deliver flight devices.

    b. If the device is a commercially available, please provide an "Off-the-Shelf" procurement estimate for your device.

   c. If the responder must incorporate new technologies or modifications to existing technologies, provide a ROM for any development plans and associated costs.

6. Delivery
   a. Provide an estimated delivery timeframe.
   b. Address major risks to meeting the delivery and how can they be overcome.
7. Procurement Strategy
   a. NASA is researching whether to issue the requirements as commercial solicitations under the authority of FAR Part 12 (Acquisition of Commercial Items) and FAR Part 13 (Simplified Acquisition Procedures). Indicate whether this solicitation type is appropriate.

Offers are requested to provide information on possible heatflux sensors and could entail multiple submissions for different measurement technologies. Limit your responses to 8 pages or less not including diagrams, pictures, or figures. Existing documents that describe suitable existing products or proposed products are acceptable as Attachments to your response; please limit the total attachment volume to less than 25 pages. Please provide your contact information so we can contact you.

Response requested by 4:30 p.m. PDT on August 19th, 2015

Interested firms should submit RFI responses and capabilities, including questions concerning this notice to Mike Lehner at Michael.M.Lehner@nasa.gov.

Attachment 1: Nominal Specifications for the MEDLI2 Heatflux Sensors

Aerothermodynamics Branch
NASA Ames Research Center, Moffett Field, California

Table of Contents

1 M2020 background and MEDLI2 Heatflux sensors 3
2 Measurement Range and Accuracy 4
2.1 Measurement range 4
2.2 Measurement accuracy 4
2.3 Time response 4
3 Survivability 5
3.1 Dry Heat Microbial Reduction for Planetary Protection 5
3.2 Survive launch environment 5
3.3 Survive and operate after nine month interplanetary cruise 5
3.4 Survive the entry environment 5
3.5 Passively cooled during entry 5
4 Configuration 5
4.1 Preferred body shape and size 5
4.2 Surface flushness 6
5 Electrical Connectivity 7
5.1 Electrical output 7
5.2 Passive sensor 7
5.3 Heatsink temperature measurement 7
5.4 Wiring 7
5.5 Output Impedance 7

1 M2020 background and MEDLI2 Heatflux sensors

Building on the successful Curiosity Rover landing, Mars 2020 (M2020) will launch a single rover on Mars as a part of the National Aeronautics and Space Administration (NASA) Mars Exploration Program. This is a continuation of a long-term plan for robotic explorations to conduct Mars habitability investigations, with habitability defined as the "capacity of the environment to sustain life", i.e., the potential of a given environment to support life at some time, past or present. The mission will focus on a roving, long-duration science laboratory that will provide a quantitative improvement in surface measurements and pave the way for future Martian surface and sample return missions.

Each vehicle that lands on Mars provides a unique opportunity to study the atmospheric entry environment. Taking thermal measurements of this environment will enable a better understanding of vehicle performance and design margins. Future vehicles will be able to take advantage of this improved knowledge in the form of lower risk and potential reductions in thermal protection mass. One type of thermal instrumentation is the heatflux senors that will be installed on the M2020 backshell. Three heatflux sensors (shown in Figure 1) will measure combined radiative and convective heating during the entry descent, and landing of M2020 (Figure 2).

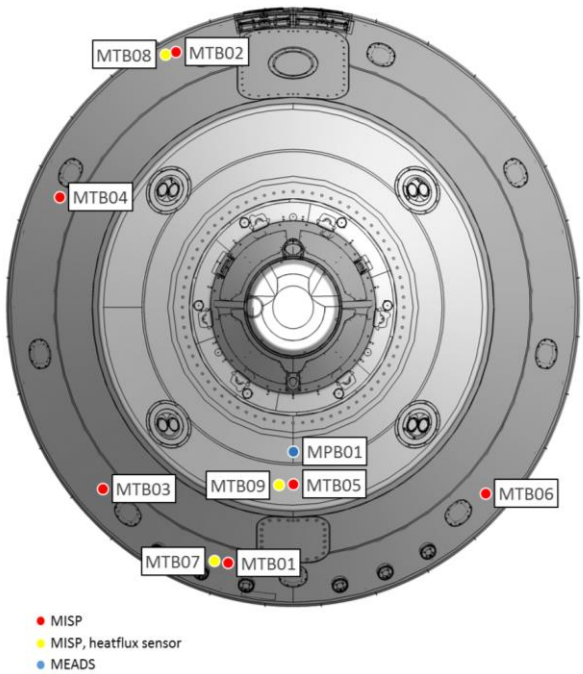

Figure 1 MSL/M2020 Backshell with candidate sensor locations. Heatflux sensors locations are shown in yellow

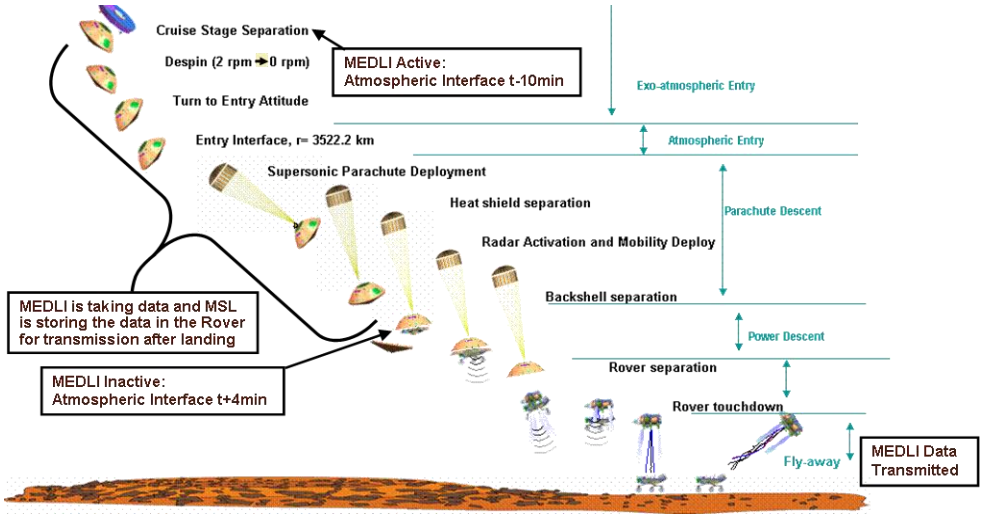

Figure 2 Timeline for MEDLI/MEDLI2 Operations during Entry, Descent, and Landing

2 Measurement Range and Accuracy

2.1 Measurement range

To capture the range of expected heating during M2020's entry into Martian atmosphere the heatflux sensor shall be capable of measuring **0 - 15 W/cm^2**. This range is based on margined heating predictions for the aftbody thermal protection system (TPS).

2.2 Measurement accuracy

The heatflux sensor will be used provide insight into the heat pulse experienced during entry into the Martian atmosphere. To provide the science team with serviceable heat flux data, the sensor shall be capable of measurement with an **accuracy of at least 1 W/cm^2**. Accuracy of **0.25 W/cm^2** or better is desired.

2.3 Time response

The heating experienced on the aftbody of the Mars 2020 entry capsule will be dynamic in nature given the entry heating profile and short-duration heating augmentation from reaction control system (RCS) jet firing events. To accurately measure and characterize this environment the sensor must be able to measure time varying heat flux to capture the dynamic response. To capture the majority of the expected dynamics, a heat flux sensor time response of **50ms or less** is desired.

3 Survivability

3.1 Dry Heat Microbial Reduction for Planetary Protection

Each sensor shall survive (non-operational) a Dry Heat Microbial Reduction (DHMR) bakeout to meet Planetary Protection requirements. This process involves a time-at-temperature, for instance, 104°C for 200 hours, or 110°C for 100 hours, or 125 °C for 25 hours.

3.2 Survive launch environment

The heat flux sensor mounted on the backshell will be subjected to environmental loads as the spacecraft goes through the various mission stages of launch, cruise, and atmospheric entry. In general, the sensor shall survive an overall random vibration load of up to 19 g_{rms} for frequencies between 20 and 2000 Hz, and shock levels as high as 6,000 g. The sensor shall also survive thermal vacuum cycling between -35°C to +70°C.

3.3 Survive and operate after nine month interplanetary cruise

Currently available M2020 thermal environment predictions for the backshell prior to atmospheric entry show that temperatures can reach as low as -80 °C. As this represents an initial condition for entry, the heat flux sensor shall operate at -80 °C environment.

3.4 Survive the entry environment

Current aerothermodynamic design environments for the backshell show that certain areas may be subjected to RCS-firing induced heating of up to 25 W/cm^2. MEDLI2 instrumentation must not degrade the performance of the M2020 TPS materials, and should not separate or break if exposed to extreme heating or entry conditions.

3.5 Passively cooled during entry

The sensor shall be passively cooled with a heat sink design, and not require any active cooling system. This is due to feasibility limitations for installation onto the flight vehicle. The mechanical mounting scheme on the flight vehicle can accommodate a sensor with a passive heat sink. The M2020 expected trajectory is expected to be less severe than for Mars Science Laboratory (MSL), thus the peak heating and total heatload for M2020 are bounded by MSL design. The expected maximum heatload is 450 J/cm^2, during which time any heatsink must remain below 150 °C.

4 Configuration

4.1 Preferred body shape and size

The heatflux sensor will pass through both backshell structure and thermal protection system. The preferred heatflux sensor shape is shown in Figure 3 below. The sensor body diameter may be larger or smaller than shown, provided the outer diameter of the cylinder with the sensing surface (0.38” in Figure 3) is 1.3” or less. The total length of the cylinder with the sensing surface

must remain 1.48”. The preferred option is for vendor to provide the sensor as a uni-body final product as illustrated. However, a sensor or sensing element's smaller form factor may be acceptable, provided it can be integrated into the illustrated sensor body by a third party. Such sensors are acceptable, provided:

1) The vendor must provide interfacing features to their sensor or element (such as threading, fasteners access, tooling interface, etc.),

2) The vendor must provide procedure or processes details to integrate,

3) The integration scheme must be robust and easily reproducible, and

4) The integration interface must not compromise mechanical and thermal integrity compared to “uni-body” design.

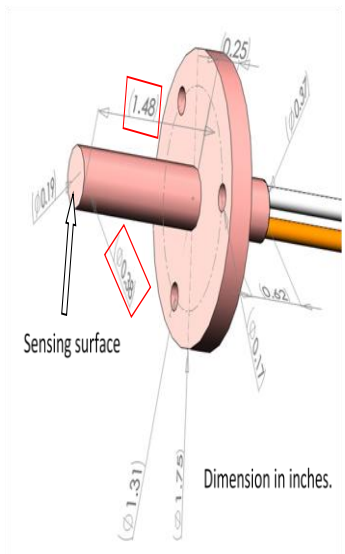

Figure 3 Preferred heatflux sensor configuration

4.2 Surface flushness

In addition to the body geometry requirement, there is a flushness requirement with respect to the TPS on the outward facing surface (the sensing surface) to minimize intrusiveness of the instrument to the surrounding flow. Some sensors may have features, such as surface mounted wires or interconnects, stepping diffusion barriers, bonding agents, welding seams, soldering seams, stepping painting layers, etc., by design, at the sensing surface (Figure 4). For such sensors, deviation from the nominal surface shall be less than 0.25 mm.

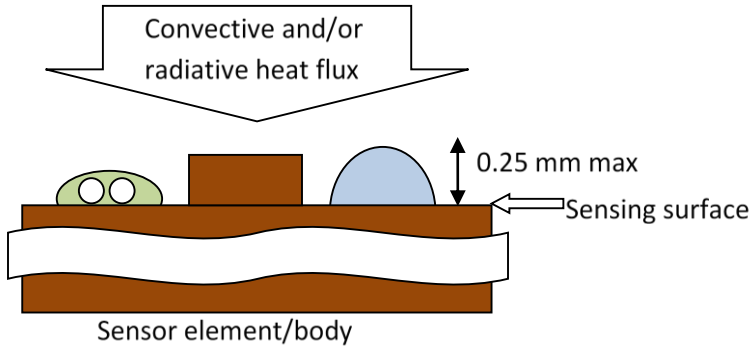

Figure 4 Maximum surface feature heights for heatflux sensor

5 Electrical Connectivity

5.1 Electrical output

The heatflux sensor must have at least 10 mV full scale output at 15 W/cm^2. To reduce the signal-to-noise ratio of the heat flux sensor, it is desired that the full scale output be 35 mV or more at 15W/cm^2.

5.2 Passive sensor

M2020 plans to leverage heritage MEDLI sensor support electronics for MEDLI2 instrumentation. To meet the constraints the of heritage data system it is desired that the heatflux sensor does not require excitation.

5.3 Heatsink temperature measurement

If a heatsink embedded temperature measurement is necessary to meet accuracy requirements, a Type-K thermocouple measurement is preferred.

5.4 Wiring

A stranded wire is preferred for output, as it would eliminate the need to transition from solid to stranded wire prior to field joint connection. It is also desired to for the sensor to have an interface with the electronics similar to a standard thermocouple connection. Connection wires of 24 - 26 AWG are preferred.

5.5 Output Impedance

A low sensor output impedance of < 100 Ohms is preferred for compatibility with the high input impedance of the instrumentation amplifiers in the sensor support electronics.