NOTES:

1. MATERIAL: 17-4 PH H1150 CONDITION
2. REMOVE BURRS AND BREAK EDGES
3. FINISH PART 32 ALL OVER

REVISIONS				
ZONE	SYM	DESCRIPTION	DATE	APPROVAL
	-	-	-	-

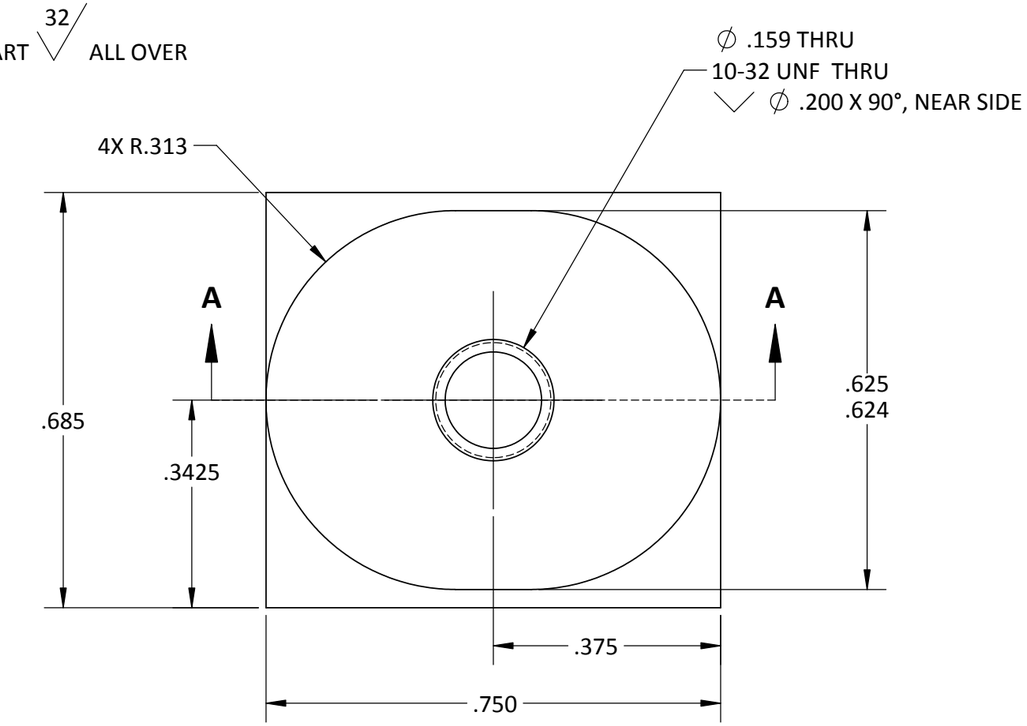

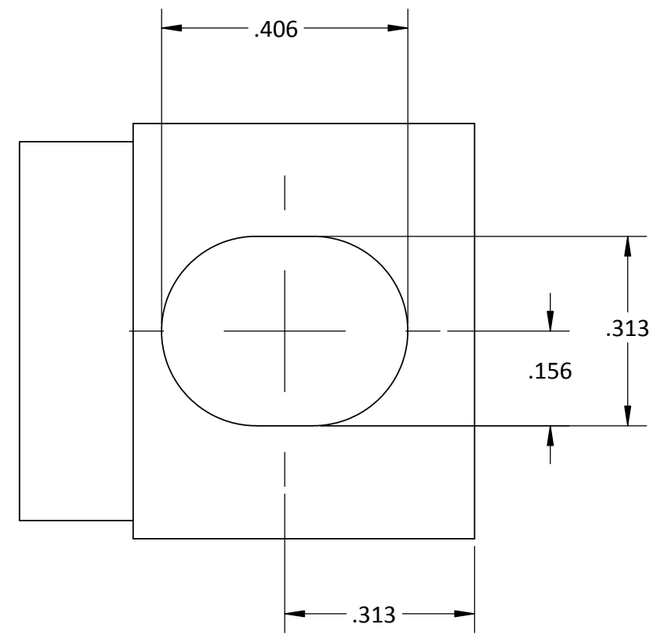

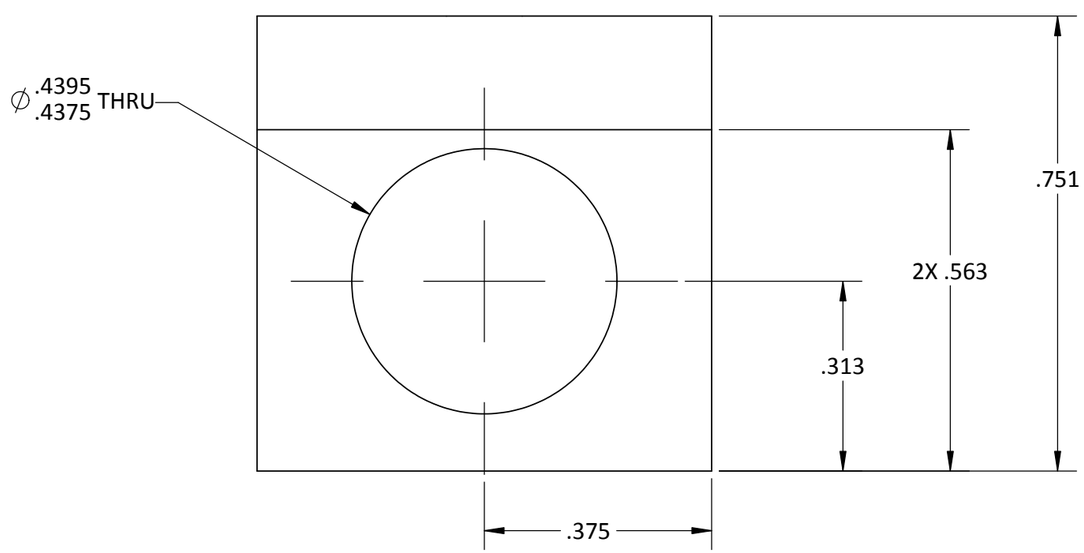

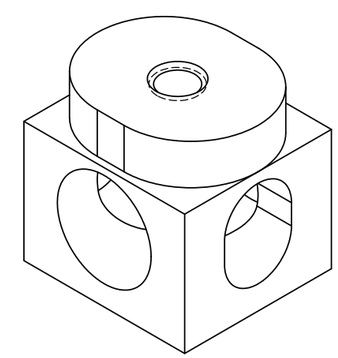

ISOMETRIC VIEW

TOLERANCE EXCEPT AS NOTED DIMENSIONS ARE IN INCHES DECIMAL .XX = ±0.020 .XXX = ±0.005 ANGLE .X = ±1°	ORIGINAL DATE OF DRAWING 05/04/2015	WEDGE DRIVE	GEORGE C. MARSHALL SPACE FLIGHT CENTER NATIONAL AERONAUTICS AND SPACE ADMINISTATION Marshall Space Flight Center, AL 35812
MATERIAL 1	DRAFTSMAN / STRESS		DWG SIZE B 141107194
	ENGINEER BCW / MNFG		
	MATERIALS / QA		
	CHECKER		
HEAT TREAT	SUBMITTED		
FINAL FINISH 3	APPROVED	EST WT 0.06 LBS / SCALE 4:1 / CODE 339B2	SHEET 1 OF 1