Designation: C1774 – 13

Standard Guide for Thermal Performance Testing of Cryogenic Insulation Systems[1]

This standard is issued under the fixed designation C1774; the number immediately following the designation indicates the year of original adoption or, in the case of revision, the year of last revision. A number in parentheses indicates the year of last reapproval. A superscript epsilon (ε) indicates an editorial change since the last revision or reapproval.

1. Scope

1.1 This guide provides information for the laboratory measurement of the steady-state thermal transmission properties and heat flux of thermal insulation systems under cryogenic conditions. Thermal insulation systems may be composed of one or more materials that may be homogeneous or non-homogeneous; flat, cylindrical, or spherical; at boundary conditions from near absolute zero or 4 K up to 400 K; and in environments from high vacuum to an ambient pressure of air or residual gas. The testing approaches presented as part of this guide are distinct from, and yet complementary to, other ASTM thermal test methods including C177, C518, and C335. A key aspect of this guide is the notion of an insulation system, not an insulation material. Under the practical use environment of most cryogenic applications even a single-material system can still be a complex insulation system (**1-3**).[2] To determine the inherent thermal properties of insulation materials, the standard test methods as cited in this guide should be consulted.

1.2 The function of most cryogenic thermal insulation systems used in these applications is to maintain large temperature differences thereby providing high levels of thermal insulating performance. The combination of warm and cold boundary temperatures can be any two temperatures in the range of near 0 K to 400 K. Cold boundary temperatures typically range from 4 K to 100 K, but can be much higher such as 300 K. Warm boundary temperatures typically range from 250 K to 400 K, but can be much lower such as 40 K. Large temperature differences up to 300 K are typical. Testing for thermal performance at large temperature differences with one boundary at cryogenic temperature is typical and representative of most applications. Thermal performance as a function of temperature can also be evaluated or calculated in accordance with Practices C1058 or C1045 when sufficient information on the temperature profile and physical modeling are available.

1.3 The range of residual gas pressures for this Guide is from 10^{-7} torr to 10^{+3} torr (1.33^{-5} Pa to 133 kPa) with different purge gases as required. Corresponding to the applications in cryogenic systems, three sub-ranges of vacuum are also defined: High Vacuum (HV) from $<10^{-6}$ torr to 10^{-3} torr (1.333^{-4} Pa to 0.133 Pa) [free molecular regime], Soft Vacuum (SV) from 10^{-2} torr to 10 torr (from 1.33 Pa to 1,333 Pa) [transition regime], No Vacuum (NV) from 100 torr to 1000 torr (13.3 kPa to 133 kPa) [continuum regime].

1.4 Thermal performance can vary by four orders of magnitude over the entire vacuum pressure range. Effective thermal conductivities can range from 0.010 mW/m-K to 100 mW/m-K. The primary governing factor in thermal performance is the pressure of the test environment. High vacuum insulation systems are often in the range from 0.05 mW/m-K to 2 mW/m-K while non-vacuum systems are typically in the range from 10 mW/m-K to 30 mW/m-K. Soft vacuum systems are generally between these two extremes (**4**). Of particular demand is the very low thermal conductivity (very high thermal resistance) range in sub-ambient temperature environments. For example, careful delineation of test results in the range of 0.01 mW/m-K to 1 mW/m-K (from R-value 14,400 to R-value 144) is required as a matter of normal engineering applications for many cryogenic insulation systems (**5-7**). The application of effective thermal conductivity values to multilayer insulation (MLI) systems and other combinations of diverse materials, because they are highly anisotropic and specialized, must be done with due caution and full provision of supporting technical information (**8**). The use of heat flux (W/m^2) is, in general, more suitable for reporting the thermal performance of MLI systems (**9-11**).

1.5 This guide covers different approaches for thermal performance measurement in sub-ambient temperature environments. The test apparatuses (apparatus) are divided into two categories: boiloff calorimetry and electrical power. Both absolute and comparative apparatuses are included.

1.6 This guide sets forth the general design requirements necessary to construct and operate a satisfactory test apparatus.

[1] This test method is under the jurisdiction of ASTM Committee C16 on Thermal Insulation and is the direct responsibility of Subcommittee C16.30 on Thermal Measurement.

Current edition approved Nov. 1, 2013. Published February 2014. DOI: 10.1520/C1774-13.

[2] The boldface numbers in parentheses refer to the list of references at the end of this standard.

Copyright © ASTM International, 100 Barr Harbor Drive, PO Box C700, West Conshohocken, PA 19428-2959. United States

Provided by IHS under license with ASTM

No reproduction or networking permitted without license from IHS

Licensee=NASA Technical Standards 4/9972545004, User=Johnson, Wesley
Not for Resale, 11/19/2014 12:01:59 MST

A wide variety of apparatus constructions, test conditions, and operating conditions are covered. Detailed designs are not given but must be developed within the constraints of the general requirements. Examples of different cryogenic test apparatuses are found in the literature (**12**). These apparatuses include boiloff types (**13-17**) as well as electrical types (**18-21**).

1.7 These testing approaches are applicable to the measurement of a wide variety of specimens, ranging from opaque solids to porous or transparent materials, and a wide range of environmental conditions including measurements conducted at extremes of temperature and with various gases and over a range of pressures. Of particular importance is the ability to test highly anisotropic materials and systems such as multilayer insulation (MLI) systems (**22-25**). Other test methods are limited in this regard and do not cover the testing of MLI and other layered systems under the extreme cryogenic and vacuum conditions that are typical for these systems.

1.8 In order to ensure the level of precision and accuracy expected, users applying this standard must possess a working knowledge of the requirements of thermal measurements and testing practice and of the practical application of heat transfer theory relating to thermal insulation materials and systems. Detailed operating procedures, including design schematics and electrical drawings, should be available for each apparatus to ensure that tests are in accordance with this Guide. In addition, automated data collecting and handling systems connected to the apparatus must be verified as to their accuracy. Verification can be done by calibration and comparing data sets, which have known results associated with them, using computer models.

1.9 It is impractical to establish all details of design and construction of thermal insulation test equipment and to provide procedures covering all contingencies associated with the measurement of heat flow, extremely delicate thermal balances, high vacuum, temperature measurements, and general testing practices. The user may also find it necessary, when repairing or modifying the apparatus, to become a designer or builder, or both, on whom the demands for fundamental understanding and careful experimental technique are even greater. The test methodologies given here are for practical use and adaptation as well as to enable future development of improved equipment or procedures.

1.10 This guide does not specify all details necessary for the operation of the apparatus. Decisions on sampling, specimen selection, preconditioning, specimen mounting and positioning, the choice of test conditions, and the evaluation of test data shall follow applicable ASTM Test Methods, Guides, Practices or Product Specifications or governmental regulations. If no applicable standard exists, sound engineering judgment that reflects accepted heat transfer principles must be used and documented.

1.11 This guide allows a wide range of apparatus design and design accuracy to be used in order to satisfy the requirements of specific measurement problems. Compliance with a further specified test method should include a report with a discussion of the significant error factors involved as well the uncertainty of each reported variable.

1.12 The values stated in SI units are to be regarded as the standard. The values given in parentheses are for information only. Either SI or Imperial units may be used in the report, unless otherwise specified.

1.13 Safety precautions including normal handling and usage practices for the cryogen of use. Prior to operation of the apparatus with any potentially hazardous cryogen or fluid, a complete review of the design, construction, and installation of all systems shall be conducted. Safety practices and procedures regarding handling of hazardous fluids have been extensively developed and proven through many years of use. For systems containing hydrogen, particular attention shall be given to ensure the following precautions are addressed: *(1)* adequate ventilation in the test area, *(2)* prevention of leaks, *(3)* elimination of ignition sources, *(4)* fail safe design, and *(5)* redundancy provisions for fluid fill and vent lines. *This standard does not purport to address all of the safety concerns, if any, associated with its use. It is the responsibility of the user of this standard to establish appropriate safety and health practices and determine the applicability of regulatory limitations prior to use.*

1.14 Major sections within this standard are arranged as follows:

	Section
Scope	1
Referenced Documents	2
Terminology	3
Summary of Test Methods	4
Significance and Use	5
Apparatus	6
Test Specimens and Preparation	7
Procedure	8
Calculation of Results	9
Report	10
Keywords	11
Annexes	
Cylindrical Boiloff Calorimeter (Absolute)	Annex A1
Cylindrical Boiloff Calorimeter (Comparative)	Annex A2
Flat Plate Boiloff Calorimeter (Absolute)	Annex A3
Flat Plate Boiloff Calorimeter (Comparative)	Annex A4
Electrical Power Cryostat Apparatus (Cryogen)	Annex A5
Electrical Power Cryostat Apparatus (Cryocooler)	Annex A6
Appendix	
Rationale	Appendix X1
References	

2. Referenced Documents

2.1 *ASTM Standards:*[3]

C167 Test Methods for Thickness and Density of Blanket or Batt Thermal Insulations

C168 Terminology Relating to Thermal Insulation

C177 Test Method for Steady-State Heat Flux Measurements and Thermal Transmission Properties by Means of the Guarded-Hot-Plate Apparatus

C335 Test Method for Steady-State Heat Transfer Properties of Pipe Insulation

C518 Test Method for Steady-State Thermal Transmission Properties by Means of the Heat Flow Meter Apparatus

[3] For referenced ASTM standards, visit the ASTM website, www.astm.org, or contact ASTM Customer Service at service@astm.org. For *Annual Book of ASTM Standards* volume information, refer to the standard's Document Summary page on the ASTM website.

Provided by IHS under license with ASTM

No reproduction or networking permitted without license from IHS

Licensee=NASA Technical Standards 4/9972545004, User=Johnson, Wesley
Not for Resale, 11/19/2014 12:01:59 MST

C520 Test Methods for Density of Granular Loose Fill Insulations
C534 Specification for Preformed Flexible Elastomeric Cellular Thermal Insulation in Sheet and Tubular Form
C549 Specification for Perlite Loose Fill Insulation
C552 Specification for Cellular Glass Thermal Insulation
C578 Specification for Rigid, Cellular Polystyrene Thermal Insulation
C591 Specification for Unfaced Preformed Rigid Cellular Polyisocyanurate Thermal Insulation
C680 Practice for Estimate of the Heat Gain or Loss and the Surface Temperatures of Insulated Flat, Cylindrical, and Spherical Systems by Use of Computer Programs
C740 Practice for Evacuated Reflective Insulation In Cryogenic Service
C870 Practice for Conditioning of Thermal Insulating Materials
C1029 Specification for Spray-Applied Rigid Cellular Polyurethane Thermal Insulation
C1045 Practice for Calculating Thermal Transmission Properties Under Steady-State Conditions
C1058 Practice for Selecting Temperatures for Evaluating and Reporting Thermal Properties of Thermal Insulation
C1482 Specification for Polyimide Flexible Cellular Thermal and Sound Absorbing Insulation
C1484 Specification for Vacuum Insulation Panels
C1594 Specification for Polyimide Rigid Cellular Thermal Insulation
C1667 Test Method for Using Heat Flow Meter Apparatus to Measure the Center-of-Panel Thermal Resistivity of Vacuum Panels
C1728 Specification for Flexible Aerogel Insulation
E230 Specification and Temperature-Electromotive Force (EMF) Tables for Standardized Thermocouples
E408 Test Methods for Total Normal Emittance of Surfaces Using Inspection-Meter Techniques
E691 Practice for Conducting an Interlaboratory Study to Determine the Precision of a Test Method

2.2 *ISO Standard:*[4]
ISO 21014 Cryogenic Vessels: Cryogenic Insulation Performance

3. Terminology

3.1 *Definitions*—Terminology of standards C168, C680, and C1045 applies to the terms used in this standard unless otherwise noted. Properties based on specimens tested under the conditions specified may not be representative of the installed performance if the end use conditions differ substantially from the test conditions. The temperature dependences of the thermal performance of a given insulation test specimen, particularly those at large temperature differentials that are common to most cryogenic insulation systems, are generally expected to be significant and non-linear in nature. For details on testing or analysis in the thermal characterization of a specific material, C1045, Section 6, Determination of the Thermal Conductivity Relationship for a Temperature Range, should be consulted.

3.2 *Definitions:*

3.2.1 *cryogenic insulation systems*—encompass a wide range of material combinations and thermal performance levels. Examples of the effective thermal conductivity of different systems and the widely varying thermal performance ranges are shown in Fig. 1.

3.2.2 *insulation test specimen*—an insulation test specimen is composed of one or more materials, homogeneous or non-homogeneous, for which thermal transmission properties through the thickness of the system are to be measured under sub-ambient conditions.

3.2.2.1 *Discussion*—An insulation test specimen may consist of a single material, one type of material in several discrete elements, or a number of different materials working in a specialized design configuration. In reality, a test specimen is always a system, either a single material (with or without inclusion of a gas) or a combination of materials in different forms. Forms of insulation test specimens may be bulk-fill, powder, blanket, layered, clam-shell, panels, monoliths, or other type configurations. Examples of materials include foams (closed cell or open cell), fibrous insulation products, aerogels (blankets or bulk-fill or packaged), multilayer insulation systems, clam shells of foams of cellular glass, composite panels, polymeric composites, or any number of bulk-fill materials such as perlite powder and glass bubbles.

3.2.3 *multilayer insulation (MLI)*—insulation systems composed of multiple radiation shields physically separated to reduce conductive heat transfer. The radiation shields are thin plastic membranes (usually polyester or polyimide films) coated on one or both sides with a low-emittance, vapor-deposited metal (usually aluminum, gold, or silver), or thin metal foil membranes. Separation of the shields can be accomplished by *(1)* alternating thin layers of low-density, low-conductivity materials such as woven fabric net, fibrous paper, powder insulation, or sliced foam spacers within the radiation shields; *(2)* bonding low-density, low conductivity filaments to one side of the radiation shields; *(3)* mechanically crinkling, dimpling, or embossing the radiation shields themselves; *(4)* attaching mechanical spacers; or *(5)* levitating the radiation shields with static or magnetic forces. For some techniques, the radiation shields are commonly metalized on one side only to achieve minimum conductive heat transfer. Guide C740 provides further information on MLI materials, designs, and performance characteristics. Test Method E408 gives information on emissivity testing of the reflective materials used in constructing MLI systems.

3.3 *Definitions of Terms Specific to This Standard:*

3.3.1 *cold boundary temperature (CBT)*—the cold boundary temperature is defined as the cold temperature imposed on cold-side surface of the insulation material by the cold mass. The cold mass may be cooled by a cryogen or a cryocooler. If a cryocooler is used, *CBT* will be derived from the net cold boundary power provided to the cold mass. The *CBT* is

[4] Available from American National Standards Institute (ANSI), 25 W. 43rd St., 4th Floor, New York, NY 10036, http://www.ansi.org.

Provided by IHS under license with ASTM
No reproduction or networking permitted without license from IHS
Licensee=NASA Technical Standards 4/9972545004, User=Johnson, Wesley
Not for Resale, 11/19/2014 12:01:59 MST

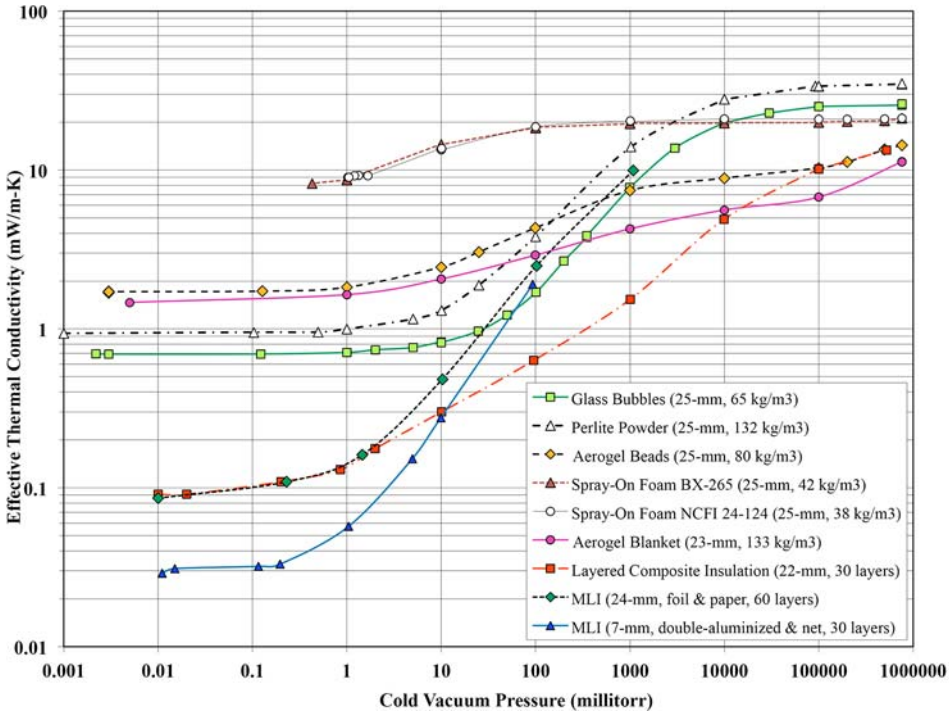

The boundary temperatures are approximately 78 K and 293 K, the residual gas is nitrogen, and the total thicknesses are typically 25-mm (3).

FIG. 1 Examples of the Variation of Effective Thermal Conductivity (k_e) with Cold Vacuum Pressure are Shown for Different Cryogenic Insulation Systems

reported with both the effective thermal conductivity and heat flux measurements. *CBT* in SI units: K.

3.3.2 *cold vacuum pressure (CVP)*—the cold vacuum pressure is defined as the steady-state vacuum pressure level within the insulation system achieved after cooldown. The *CVP* can be any pressure from high vacuum to no vacuum, with or without a residual gas. The *CVP* and residual gas composition is reported with both the effective thermal conductivity and heat flux measurements. *CVP* in SI units: Pa; in conventional units: millitorr; one millitorr = 0.1333 Pa.

3.3.3 *effective thermal conductivity (k_e)*—the thermal conductivity through the total thickness of the insulation test specimen between the reported boundary temperatures and in a specified environment (mW/m-K). The insulation test specimen may be one material, homogeneous non-homogeneous, or a combination of materials. As this guide addresses many different materials and a wide spectrum of low-temperature applications, and as the use of thermal performance values stated in units of thermal conductivity is a widely used practice in cryogenic engineering design and development activities, a full explanation of such terms is given herein. The use of k_e is often essential for informing decisions between different design approaches to insulation systems such as vacuum-jacketed versus ambient pressure or MLI versus bulk-fill powder. The k_e values are also used for product development, comparison of similar systems, gross comparison of widely different systems, and preliminary design calculations for first order thermal performance estimates. The thickness parameter that is part of k_e is also important for understanding volumetric limitations and for assessing overall weight and thermal mass properties of the system in both steady-state and transient operations. Any scaling or extrapolation of k_e data is generally not recommended, especially in the case of MLI type systems. However, if any scaling is performed it should be done with caution and within the bounds of good engineering judgment (26). In scaling or other such comparisons the user must keep in mind the differences in the magnitude of thermal performance, environment, boundary temperatures, thickness variations, and mechanical nature of the materials used. Note also that thermal conductance can be directly calculated based on heat flux and geometry.

3.3.3.1 *Discussion*—In accordance with C168, thermal conductivity (λ) is for a homogeneous material with a single mode of heat transfer and is generally independent of thickness. Apparent thermal conductivity (λ_a) is for a material that exhibits thermal transmission by several modes of heat transfer that often results in property variations with thickness, surface emittance, cellular or interstitial content, etc. Use of the "apparent" modifier must always be accompanied by the conditions of the measurement. These usage issues are addressed for homogeneous materials; the property variations, both in number and magnitude, are often even more pronounced for the case of cryogenic-vacuum testing and the low density materials of main interest.

3.3.3.2 *Discussion*—Practice C1045, Appendix X3, develops definitions and calculations for thermal conductivity variations with mean temperature. The purpose is to clarify the differences between analysis of data at large temperature differences and those taken at small temperature differences. Equations for mean thermal conductivity (λ_m) and thermal

Provided by IHS under license with ASTM
No reproduction or networking permitted without license from IHS
Licensee=NASA Technical Standards 4/9972545004, User=Johnson, Wesley
Not for Resale, 11/19/2014 12:01:59 MST

conductivity at the mean temperature [$\lambda(T_m)$] are provided. However, this section points out that the practice only works for thermal transmission properties that show a gradual change with temperature and that it may not work for the following cases: *(1)* onset of convection, *(2)* abrupt change in phase of an insulation component such as a condensable gas, and *(3)* heat flow anomalies found in reflective insulations. Any of these cases are typically found in cryogenic insulation systems. Therefore, the use of λ_m is different from the λ_a defined in C168, even though both are considering large temperature differences.

3.3.3.3 *Discussion*—Practice C1058 gives information on reporting thermal properties using mean temperatures including the issues of testing closed-cell foams. This standard also provides guidance on the selection of temperature differences to be used in testing.

3.3.4 *heat flow rate (Q)*—quantity of heat energy transferred to or from a system in a unit of time (W).

3.3.5 *heat flux (q)*—heat flow rate, under steady-state conditions, through a unit area, in a direction perpendicular to the plane of the thermal insulation system (W/m^2). A mean area must be calculated for any test geometry: cylindrical or spherical.

3.3.6 *high vacuum (HV)*—residual gas pressure from <10^{-7} torr to 10^{-3} torr (<1.333^{-5} Pa to 0.133 Pa) [free molecular regime].

3.3.7 *no vacuum (NV)*—residual gas pressure from 100 torr to 1000 torr (13.3 kPa to 133 kPa) [continuum, or viscous, regime]; 1 atmosphere pressure = 101.3 kPa = 760 torr.

3.3.8 *soft vacuum (SV)*—residual gas pressure from 10^{-2} torr to 10 torr (1.33 Pa to 1333 Pa) [transition, or mixed mode, regime].

3.3.9 *system thermal conductivity (k_s)*—the thermal conductivity through the total thickness of the insulation test specimen and all ancillary elements such as packaging, supports, getter packages, enclosures, etc. (mW/m-K) (**27, 28**). As with k_e, the values of k_s must always be linked with the reported warm and cold boundary temperatures and the specific test environment.

3.3.9.1 *Discussion*—Specification C1484 defines an effective thermal resistance for vacuum insulation panels. This effective R-value is for the total system including all packaging elements and edge heat flow effects and is distinctly separate from the apparent thermal resistivity of the vacuum panel which is taken as the intrinsic center-of-panel thermal resistivity. Similarly, with many cryogenic-vacuum insulation systems, a main interest is the effective thermal conductivity through a complex of one or more materials (k_e) as well as the system thermal conductivity (k_s) of a total system as it would be used in application.

3.3.10 *warm boundary temperature (WBT)*—the warm boundary temperature is defined as the warm temperature imposed on the warm-side surface of the insulation material by the warm mass. The warm mass may be heated by an electrical heater, liquid bath heat exchanger, ambient environment, or other means. The *WBT* could also be further developed from consideration of other types of boundary conditions such as convection or applied power or heat flux. The *WBT* is reported with both the effective thermal conductivity and heat flux measurements. *WBT* in SI units: K.

3.3.11 *warm vacuum pressure (WVP)*—the warm vacuum pressure is defined as the vacuum level within the insulation system before cooldown. The WVP is usually considered to be vacuum level at ambient temperature but may also be given as the vacuum level at some elevated temperature prescribed as part of a heating/bake-out step prior to evacuation. WVP in SI units: Pa; in Imperial units: torr; 1 torr = 133.3 kPa; 1 millitorr = 0.1333 Pa.

3.4 *Symbols and Units:*

3.4.1 A—area of test specimen, m^2

3.4.2 A_e—effective heat transfer area, m^2

3.4.3 d_e—effective heat transfer diameter (for flat plate specimens), m

3.4.4 E—voltage, V

3.4.5 h_{fg}—heat of vaporization, J/g

3.4.6 I—current, A

3.4.7 L—length of test specimen, m

3.4.8 L_e—effective heat transfer length (for cylindrical specimens), m

3.4.9 Q_{loss}—heater power loss, W

3.4.10 r_o—outer radius of insulation, m

3.4.11 r_i—inner radius of insulation, m

3.4.12 ΔT—temperature difference (*WBT* – *CBT*), K

3.4.13 V_g—volumetric flow rate of a gas at standard temperature and pressure (STP), m^3/s

3.4.14 x—thickness of insulation system or linear dimension in the heat flow direction, m

3.4.15 η_{heater}—heater power constant

3.4.16 ρ_g—density of boiloff gas at standard conditions, kg/m^3

3.4.17 ρ—bulk density of insulation system as-installed, kg/m^3

4. Summary of Test Methods

4.1 This guide describes both absolute and comparative test methods for measuring the thermal performance of insulating materials and systems under cryogenic and vacuum conditions. The methods may use cryogens or cryocoolers to provide the refrigeration for the cold side temperatures. The basis of heat flow measurement can be boiloff calorimetry, electrical power, or temperature response. An absolute apparatus means that the test chamber is fully guarded from peripheral heat leaks while a comparative apparatus indicates a partially guarded test chamber. A cylindrical apparatus indicates hollow cylindrical test specimen while a flat plate apparatus indicates a round disk test specimen. The general arrangement of a cylindrical boiloff apparatus is given in Fig. 2. The general arrangement of a flat plate boiloff apparatus is given in Fig. 3. Either apparatus can be designed as absolute or comparative depending on testing needs. The relatively simplified comparative apparatus is useful for large numbers of specimens, similar specimens, quality control testing, or of course comparison testing. The

Provided by IHS under license with ASTM
No reproduction or networking permitted without license from IHS
Licensee=NASA Technical Standards 4/9972545004, User=Johnson, Wesley
Not for Resale, 11/19/2014 12:01:59 MST

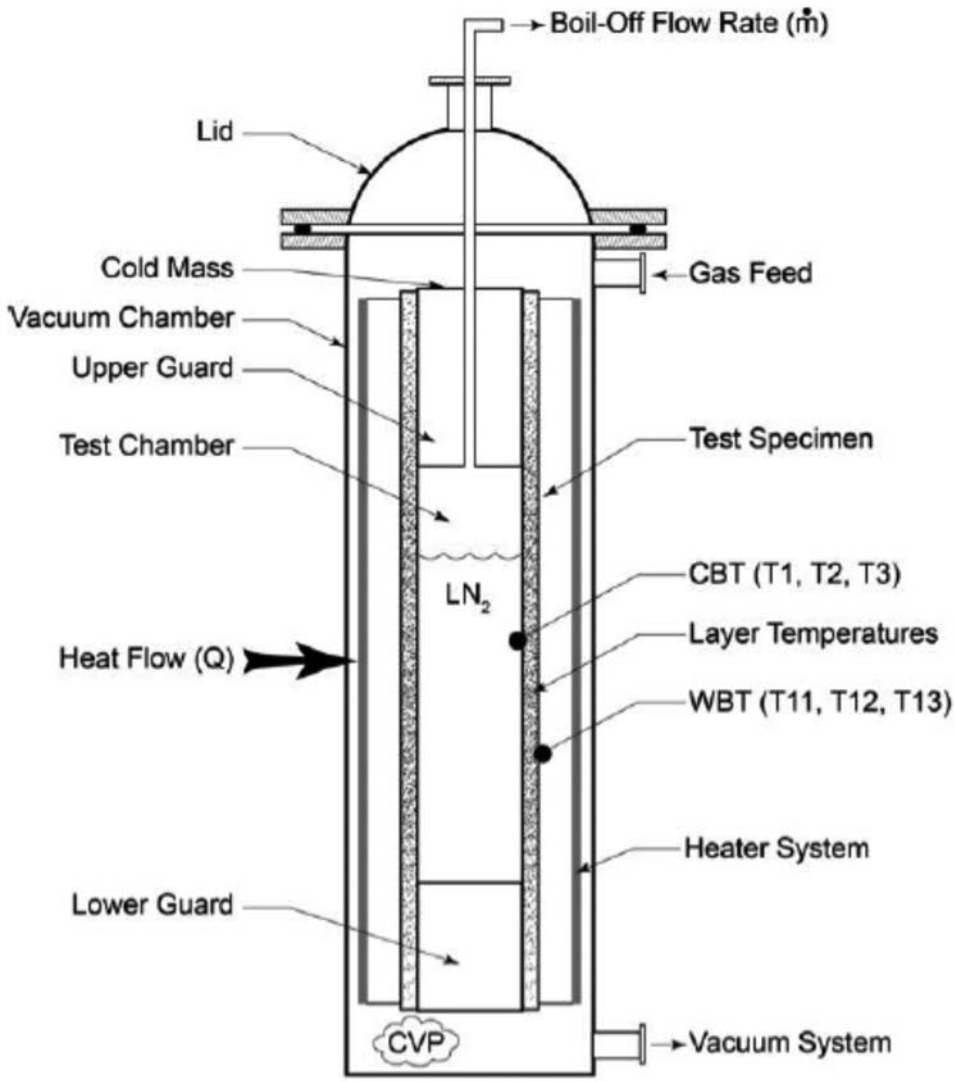

FIG. 2 General Arrangement of a Cylindrical Boiloff Apparatus (29)

general arrangement of an embedded heater apparatus that uses cryogens for cooling is given in Fig. 4. The embedded heater apparatus is generally an absolute apparatus calibrated by temperature measurements under balanced heater inputs. The general arrangement of an electrical power apparatus that uses a cryocooler is given in Fig. 5.

5. Significance and Use

5.1 A key aspect in understanding the thermal performance of cryogenic insulation systems is to perform tests under representative and reproducible conditions, simulating the way that the materials are actually put together and used in service. Therefore, a large temperature differential across the insulation and a residual gas environment at some specific pressure are usually required. Added to these requirements are the complexities of thickness measurement at test condition after thermal contraction, verification of surface contact and/or mechanical loading after cooldown, and measurement of high vacuum levels within the material. Accounting for the surface contact resistance can be a particular challenge, especially for rigid materials (32). The imposition of a large differential temperature in generally low density, high surface area materials means that the composition and states of the interstitial species can have drastic changes through the thickness of the system. Even for a single component system such as a sheet of predominately closed-cell foam, the composition of the system will often include air, moisture, and blowing agents at different concentrations and physical states and morphologies throughout the material. The system, as tested under a given set of *WBT*, *CBT*, and *CVP* conditions, includes all of these components (not only the foam material). The *CVP* can be imposed by design or can vary in response to the change in boundary temperatures as well as the surface effects of the insulation materials. In order for free molecular gas conduction to occur, the mean free path of the gas molecules must be larger than the spacing between the two heat transfer surfaces. The ratio of the mean free path to the distance between surfaces is the Knudsen number (see C740 for further discussion). A Knudsen number greater than 1.0 is termed the molecular flow condition while a Knudsen less than 0.01 is considered a continuum or viscous

Provided by IHS under license with ASTM
No reproduction or networking permitted without license from IHS
Licensee=NASA Technical Standards 4/9972545004, User=Johnson, Wesley
Not for Resale, 11/19/2014 12:01:59 MST

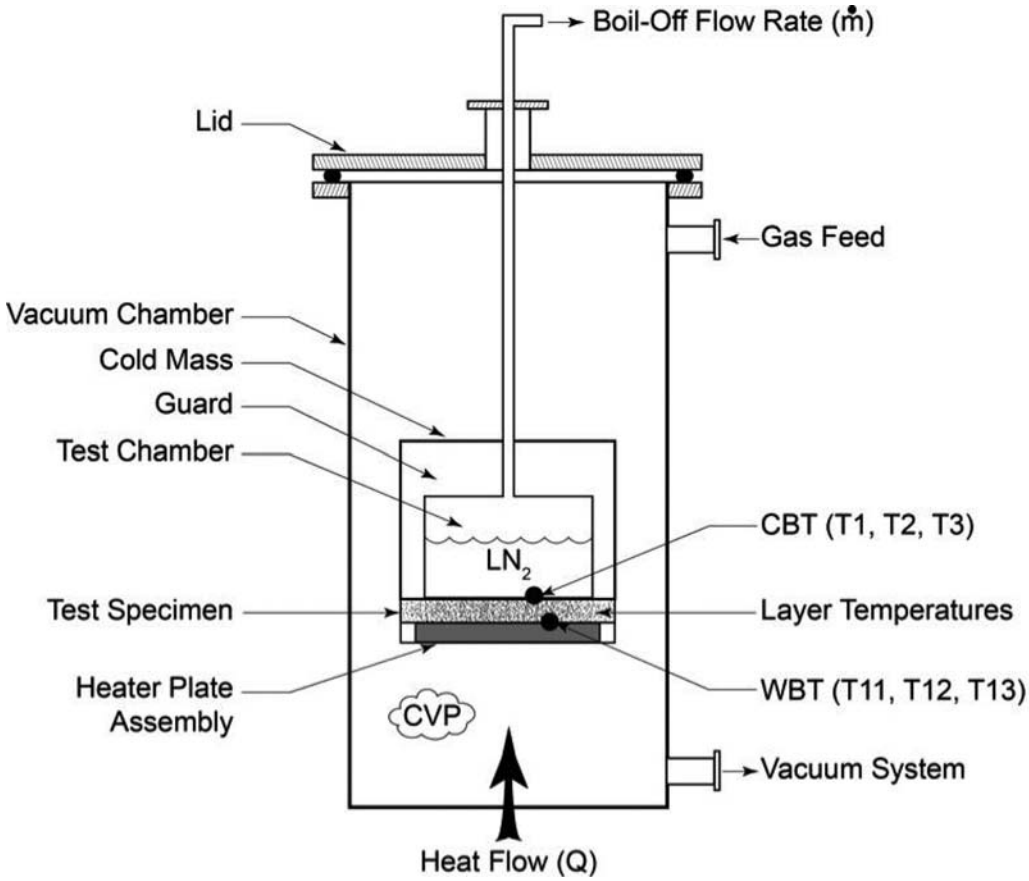

FIG. 3 General Arrangement of a Flat Plate Boiloff Apparatus (29)

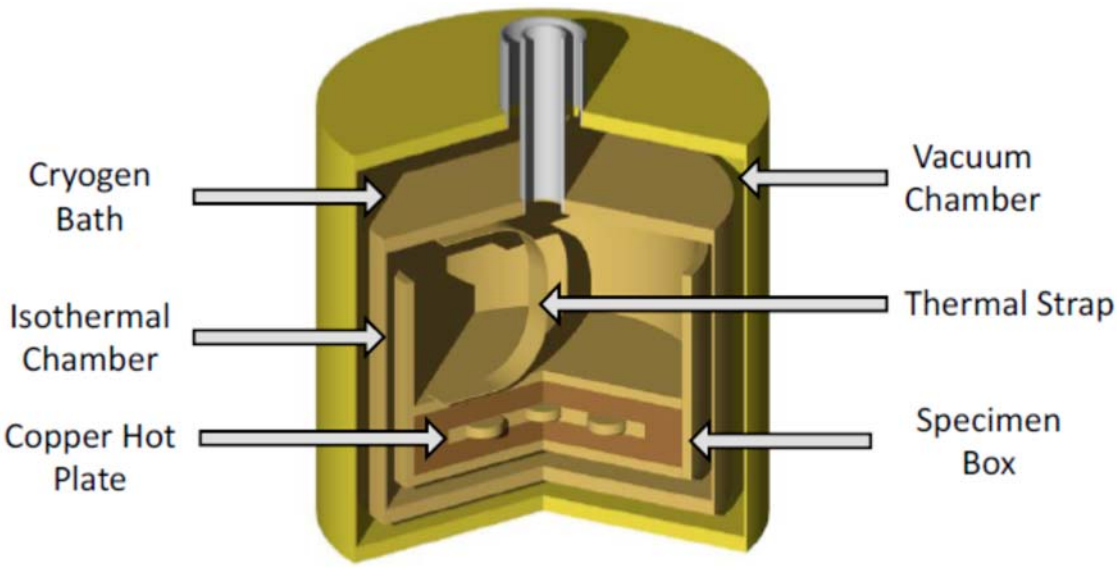

FIG. 4 General Arrangement of an Embedded Heater (Electrical Power) Apparatus That Uses a Cryogen (30)

flow condition. Testing of cryogenic-vacuum insulation systems can cover a number of different intermediate or mixed mode heat transfer conditions.

5.2 Levels of thermal performance can be very high: heat flux values well below 0.5 W/m^2 are measured. This level of performance could, for example, correspond to a k_e below 0.05 mW/m-K (R-value = 2900 or higher) for the boundary temperatures of 300 K and 77 K and a thickness of 25 mm. At these very low rates of heat transmission, on the order of tens of milliwatts for an average size test apparatus, all details in approach, design, installation, and execution must be carefully considered to obtain a meaningful result. For example, lead

Provided by IHS under license with ASTM
No reproduction or networking permitted without license from IHS
Licensee=NASA Technical Standards 4/9972545004, User=Johnson, Wesley
Not for Resale, 11/19/2014 12:01:59 MST

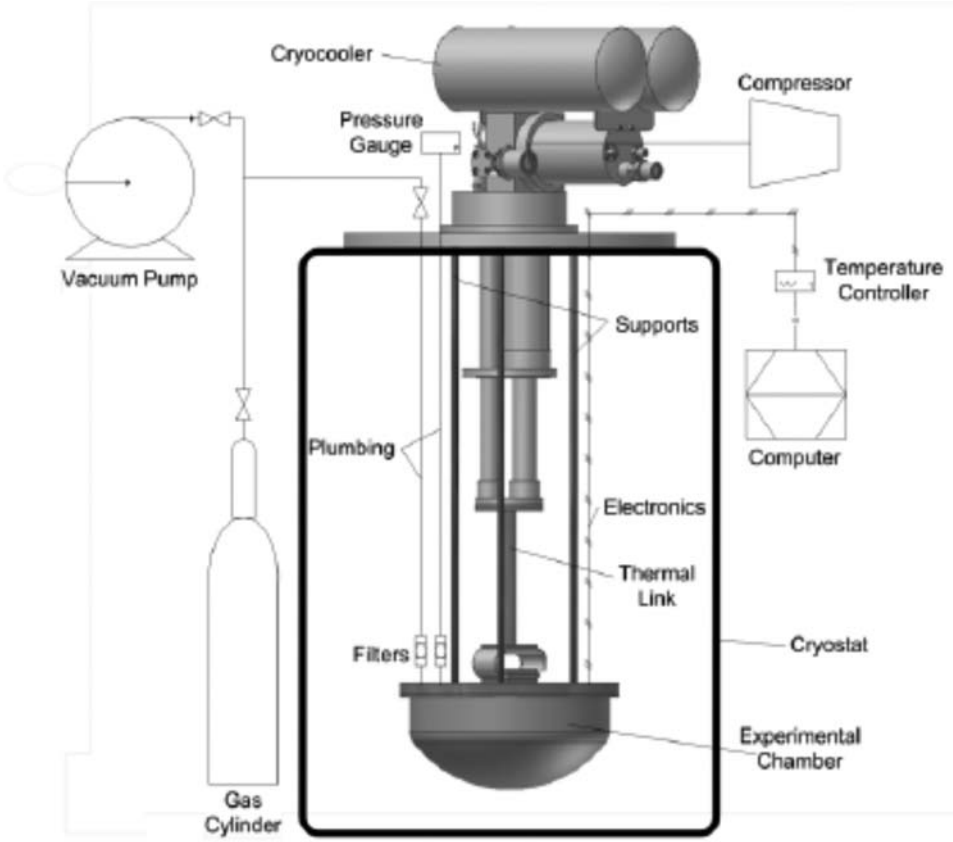

FIG. 5 General Arrangement of an Electrical Power Apparatus That Uses a Cryocooler (31)

wires for temperature sensors can be smaller diameter, longer length, and carefully installed for the lowest possible heat conduction to the cold mass. In the case of boiloff testing, the atmospheric pressure effects, the starting condition of the cryogen, and any vibration forces from surrounding facilities should also be considered. If an absolute test apparatus is to be devised, then the parasitic heat leaks shall be essentially eliminated by the integrated design of the apparatus and test methodology. The higher the level of performance (and usually the higher level of vacuum), the lower the total heat load and thus the parasitic portion shall be near zero. For a comparative apparatus, the parasitic heat leaks must be reduced to a level that is an acceptable fraction of the total heat load to be measured. And most importantly, for the comparative apparatus, the parasitic portion of the heat shall be consistent and repeatable for a given test condition.

5.3 *Boiloff Testing*—Boiloff testing can be performed with a number of cryogens or refrigerants with normal boiling points below ambient temperature (**29**). The cold boundary temperature is usually fixed but can be easily adjusted higher by interposing a thermal resistance layer (such as polymer composite or any suitable material) between the cold mass and the specimen. However, the thermal contact resistance shall be fairly well understood and obtaining a *specific* cold-side temperature can be difficult. Liquid nitrogen (LN_2) is a commonly used cryogen and can be handled and procured with relative ease and economy. Its 77 K boiling point at 1 atmosphere pressure is in a temperature range representative of many applications including liquid oxygen (LO_2), liquid air (LAIR), and liquefied natural gas (LNG). The low level of ullage vapor heating with liquid nitrogen systems means that the vapor correction is minimal or even negligible. Liquid hydrogen (LH_2), with a normal boiling point of 20 K, can be used with the proper additional safety precautions for working with a flammable fluid. Liquid helium (LHE), with a normal boiling point of 4 K, can also be used effectively, but with a significant rise in expense and complexity. The thermal performance, or heat flow rate (W), is a direct relation to the boiloff mass flow rate (g/s) by the heat of vaporization (J/g) of the liquid. Boiloff methods are therefore direct with respect to calculating a k_e or heat flux.

5.4 *Electrical Power Testing*—In some cases a boiloff method may not be the best option for thermal performance testing. Obtaining a cold boundary temperature below 77 K without additional safety constraints (liquid hydrogen) or unreasonable expense (liquid helium) is often the main reason. The use of electrical power methods provides a wide range of possible approaches without the constraints of a liquid-vapor interface and liquid management. Electrical power apparatus can be designed to use only cryocoolers, cryocoolers in conjunction with cryogens or vapor shields, cryogens to provide the refrigeration to maintain the desired cold boundary temperature, or any combination of these. The key experimental element is the electrical heater system(s), but the key challenge is the temperature sensor calibration at the low temperatures. Temperature sensors are generally silicon diodes

Provided by IHS under license with ASTM
No reproduction or networking permitted without license from IHS
Licensee=NASA Technical Standards 4/9972545004, User=Johnson, Wesley
Not for Resale, 11/19/2014 12:01:59 MST

or platinum resistance thermometers. These methods are therefore indirect with respect to calculating effective thermal conductivity or heat flux.

5.5 *MLI*—Multilayer insulation systems are usually evacuated (designed for a vacuum environment). Materials used in MLI systems are highly anisotropic by nature. MLI systems exhibit heat flux values one or two orders of magnitude lower than the best available powder, fiber, or foam insulations under vacuum conditions. The thermal performance of multilayer insulations will vary from specimen to specimen due to differences in the material properties, such as the emittance of the reflective shields, and differences in construction, such as layer density and the way seams or joints are made. MLI systems can vary due to environmental conditioning and the presence of foreign matter such as oxygen or water vapor. MLI systems can vary due to aging, settling, or exposure to excessive mechanical pressures which could wrinkle or otherwise affect the surface texture of the layers. For these reasons, it is imperative that specimen materials be selected carefully to obtain representative specimens. It is recommended that several specimens of any one MLI system be tested with at least three tests performed on each specimen. Further information, including installation methods and typical thermal performance data are given in C740.

5.6 *High Performance Insulation Systems*—High performance insulation systems, ranging from aerogels at ambient pressure to evacuated powders to MLI under high vacuum conditions, are typical for the more-demanding applications in cryogenic equipment and processes. The requirements of high performance mean low rates of heat energy transfer (in the range of milliwatts) and even more demanding requirements for accurately measuring these small heat leakage rates. Achieving such measurements requires a sound experimental approach and design, specialized vacuum equipment, a well though-out methodology, and careful execution and handling of data.

NOTE 1—The current lack of Certified Reference Materials (CRMs), or even internal laboratory reference materials, that are characterized under cryogenic-vacuum conditions underscores the need for round robin testing, inter-laboratory studies, and development of robust analytical tools based on these experimental results.

6. Apparatuses

6.1 The test apparatuses can be designed for any or all of the following conditions, as limited by practicality and suitability in results: evacuated, soft vacuum, or ambient pressure (high vacuum or residual gas environments).

6.2 In all cases, the focus is generally on large temperature differences, but small temperature differences can also be accommodated by specific design modification or by interposing appropriate thermal resistances (insulation materials) between the warm and cold boundaries.

6.3 The design approach and specific dimensional details must be sufficiently indentified and understood for accurate thermal conductivity and heat flux determinations to be made. The effective heat transfer areas are defined by the median line(s), or center of the gap(s), between the test measurement chamber (or the heat metered section) and the connecting thermal guard(s). Typically there is a gap between the metered section and the guard section(s). The metered section area shall be determined, either by measurements or detailed analysis and calculations, according to the center of this gap. Test Method C177, Section 6.4, provides further information on the physical design and thermal considerations for the gap.

6.4 *Boiloff Calorimeter Apparatuses*—In these apparatuses, the thermal energy transferred through an insulation specimen is measured by a boiloff calorimeter method. Ideally, a boiling fluid maintained at constant saturation conditions intercepts all of the energy crossing the cold boundary in a direction normal to the plane of the insulation layers in the central or inner portion of an specimen. This energy is absorbed by the vaporization of the calorimetric fluid (cryogen) that is subsequently vented. For absolute boiloff methods and lower fill levels (wetted surface area less than 75% for liquid nitrogen and less than 90% for liquid hydrogen or liquid helium), the temperature of the gas exiting the test measurement tank should be measured and the change in sensible heat added to the energy from boiloff flow. Heat flux q and effective thermal conductivity k_e are calculated from thermodynamic properties of the fluid and the measured boiloff flow rate. Measurements of the mechanical compressive force applied to the specimen and the separation between hot and cold boundary surfaces in contact with the insulation can also be obtained for the flat plate version as required. Typical characteristics of boiloff calorimeter apparatuses are given in Table 1. Typical requirements for cylindrical and flat-plate calorimeters that are suitable for use with this method are described in Annex A1 through A1.3. Particular design features required for safety are discussed in Section 8.

6.5 *Electrical Power Apparatuses*—In these apparatuses, the electrical power is the primary measurement and temperature sensor calibrations are of critical importance.

TABLE 1 Typical Characteristics of Boiloff Calorimeter Apparatuses

Geometry	Type	Heat Flux Range (W/m^2)	k_e Range (mW/m-K)	Typical Specimen Size
Cylindrical	Absolute	0.1 to 500	0.01 to 60	1-m length; up to 50-mm thickness
Cylindrical	Comparative	1 to 500	0.1 to 60	0.5-m length; up to 30-mm thickness
Flat Plate	Absolute	1 to 1,000	0.05 to 100	200-mm diameter; up to 30-mm thickness
Flat Plate	Comparative	10 to 1,000	0.5 to 100	75-mm or 200-mm diameter; up to 30-mm thickness

--`,,``,,`,`,`,,`,`,`,`,,`,`,`,`,,`,,`-`-`,,`,,`,`,`,,`---

Provided by IHS under license with ASTM

No reproduction or networking permitted without license from IHS

Licensee=NASA Technical Standards 4/9972545004, User=Johnson, Wesley
Not for Resale, 11/19/2014 12:01:59 MST

6.5.1 *Embedded Heater Apparatus*—An isothermal test specimen box made out of a suitable high thermal conductivity material, such as OFHC copper, equipped with a suitable temperature sensor and an electrical heater. The hot plate heater is used to apply heat for the thermal conductivity measurements; the test specimen box heater assists in raising the overall temperature. The box is thermally linked to and suspended inside an isothermal vacuum tight chamber that is also constructed from OFHC copper. This chamber is placed inside the vacuum can and equipped with a heater and a temperature sensor. This arrangement allows variation of the temperature of the chamber and its contents well above that of a cryogen bath surrounding the vacuum can. The center of each test specimen half is machined to make room for the isothermal copper hot plate which is placed in between the two halves, thus assuring that all of the heat passes through the specimen, except for that conducted along the heater wires which are thermally linked to a cryogen bath.

6.5.2 *Cryocooler Apparatus*—The cryocooler-based electrical power cryostat apparatus includes an experimental chamber that is thermally linked to an appropriate cryocooler refrigeration system. Designs can be flat plate or cylindrical. The method works by creating axial heat transfer through the insulation test specimen and measuring the corresponding temperatures within the test specimen.

6.5.3 *Guarded Heater Apparatus*—Test Methods C177 or C518 could be adapted with the cryogenic and vacuum guidelines of this Guide to provide a means of testing using a heater apparatus. Test Method C1667 provides an example and guidance on adapting an established test apparatus for the purpose of test complex insulation systems such as panels and other composites.

7. Test Specimens and Preparation

7.1 Materials include foams, powders, aerogels, and MLI in forms including disks, panels, blankets, clamshells, and loose fill. Ancillary materials such as tapes, fasteners, packaging, etc. must be carefully evaluated for outgassing and temperature compatibilities. Upper-use temperatures and overall vacuum behavior of all materials must be known in order to obtain the desired test conditions as well as for operational safety during evacuation and heating. As differences between test samples and full-sized insulation may result in differences between data and actual performance of an insulation system, all aspects of the test specimen design configuration, preparation, and installation must be carefully considered. For example, a flat disk test specimen may be reduced in thickness in order to achieve minimal edge effect (parasitic heat) but then be less than representative of the typical field installed thickness. An example with a blanket type MLI system is a seam joining method, representative of the actual field installed system and applied similarly to the test specimen, which overwhelms the total heat load to be measured.

7.2 *Bulk-Fill Materials*—Bulk-fill materials may be tested by using a containment sleeve that does not thermally connect with the cold mass assembly (**33**). The bulk density, as-tested, must be measured and reported. The thickness measurement can be taken by reference from the containment apparatus with any necessary compensation due to thermal contraction by design or calculation. Temperature sensors can be placed through the thickness with proper care in placement of the tips and execution of the lead wires.

7.3 *Monoliths, Clam-Shells, and Panels*—Monolithic materials, as well as clam-shells and panel type insulation test specimens, should be tested with special attention to the surface thermal contact and overall fit-up of the specimen within the apparatus. Thickness measurements must be devised with an accounting for cryogenic-vacuum effects during testing. Temperature sensors must the arranged so that surface contacts with the specimen are not disturbed.

7.4 *Blankets and Layered Constructions*—Blankets and layered constructions can be tested in a multitude of arrangements of thicknesses and combinations. Layers should extend to cover the cold mass surface of the apparatus. Edges of the specimens must be carefully examined during installation to avoid or identify thermal short circuits. Temperature sensors can be imbedded within layers with proper attention to lead wire lengths. Thicknesses can be measured as the insulation test specimen is constructed to allow for intermediate thermal conductivity calculations.

7.5 *MLI*—Multilayer insulation specimens include reflector layers and spacer layers. The MLI may be applied as continuous roll-wrapped product, blankets, multiple sub-blankets, layer-by-layer overlap, layer-by-layer interleaved, helical strip wraps, or spiral wrapping techniques. Guide C740 provides further details on the materials and processes involved with MLI systems. All manner of different materials, combinations, and constructions cannot be addressed here, but general guidelines for preparation are given as follows. Documentation of all installation and preparation steps, along with consistent execution of these steps, is the key to reliable and comparable results among similar MLI systems (**11**).

7.5.1 *Flat Plate*—Cut spacers to the diameter of the hot and cold boundary plates. Cut the radiation shield to a diameter that is approximately 5 mm less than that of the spacer. The maximum specimen thickness to be tested using this test method shall be 0.05 times the plate width.

7.5.2 *Cylindrical*—The installation approach defines the dimensions of the spacers relative to the reflectors. In all cases, the length of the spacer should be approximately the same dimension as the cold mass length. Aluminized tape and aluminum foil tape (low out-gassing types) can be used to affix the layers or blankets as required. Layer by layer constructions can be interleaved (overlapped) in pairs. The amount of overlap should be from 10 to 30 mm and accordingly specified. If layers are combined into sub-blankets and joined, a parasitic delta heat leak can occur and must be recognized. The joining can be overlapped, folded over, introduce a gap (or crack), or other non-uniformities. The techniques must be carefully defined and executed; analysis of these localized effects on the total heat flux must be done for accurate conclusions about the test data.

7.5.3 Visually inspect the materials and cut the test specimens from material that is free of tears, abnormal creases, or other defects. Clean gloves should be worn when handling

Provided by IHS under license with ASTM
No reproduction or networking permitted without license from IHS

Licensee=NASA Technical Standards 4/9972545004, User=Johnson, Wesley
Not for Resale, 11/19/2014 12:01:59 MST

materials and specimens and handling, in general, should be kept to a minimum. Use a template to ensure that each layer of reflector and spacer material is cut uniformly to the desired dimensions. Clean the template with a suitable degreasing solvent and take care to avoid touching the template or the MLI materials with bare fingers or soiled gloves.

7.5.4 Install specimens consisting of reflective shield metalized on one side only into the apparatus with the metalized surfaces oriented toward the hot boundary plate (for most applications). Installation of spacer layers or reflective layers on the hot and cold boundary surfaces must be considered according to the requirements for each test. The installation should either simulate a representative system or be devised to offer the best scientific information.

7.5.5 For flat plate apparatuses, weigh assembled specimens and measure their free stacked thicknesses prior to installation into the apparatus. Additionally, the space between the cold mass and the vacuum chamber (warm side) shall be measured and accounted with the pre-installed thickness of the MLI. For cylindrical specimens, the weighing and free stacked thickness measurement can be done after removal from the apparatus. Thickness values for the cylindrical specimens shall be measured for the as-installed specimen by outside circumference measurements in a minimum of three locations around the cold mass test chamber.

7.6 *Temperature Sensors*—Thermocouples are generally used for large temperature differences such as 100 K, 200 K, or more. Smaller gauge wires, such as 30 to 36 gauge, should be selected. Types E, K, and T are generally recommended. For cryogens such as liquid hydrogen or liquid helium, thermocouples do not provide the desired accuracy for the cold side, thus silicone diodes, platinum resistance thermometers, or other suitable low-temperature sensors should be used. However, Type E thermocouples, with proper care in calibration and execution, can be successfully used down to 20 K.

7.6.1 For boiloff apparatuses, temperature sensors are required for the warm boundary temperature. The cold boundary temperature is defined by the thermodynamic state of the cryogen (the local atmospheric pressure and the system backpressure plus the height-averaged head pressure of the liquid column define the saturation temperature). Temperature sensors may be applied, as optional, on the cold boundary to aid in the cooldown or bake-out processes, or to provide additional information on localized temperature gradients. The *WBT* is defined as the outer surface of the insulation test specimen (not the vacuum chamber wall) and a minimum of two sensors is recommended for the heat measurement zone. An additional temperature sensor can be applied on the warm boundary to provide feedback for a heat controller. The temperature of the vacuum chamber wall (or heat emitting shroud) can also be measured, but the temperature difference between it and the outer surface of the insulation specimen will generally be small (only a few K) for a High Vacuum test.

7.6.2 Internal or inter-layer temperature sensors are optional but provide confidence for the overall test result and allow calculation and analysis of intermediate thermal performance values. The length of each lead wire pair is crucial in many cases such as nearer the cold side in MLI constructions. The conduction heat leak for each pair shall be checked based on the wire diameter, length, and worst case temperature boundaries. Lengths shall be chosen according to a minimum total heat load, such as less than one percent of the predicted total heat leakage rate. The lead wires shall also be thermally anchored in the region of the guard chambers with the measurement point being in the heat measurement zone.

7.6.3 For flat plate apparatuses, the temperature sensors attachment to the warm and cold boundary surfaces can be critical. For rigid or semi-rigid test specimens, the lead wires must be recessed for a smooth surface to ensure adequate thermal contact.

7.7 *Test Specimen Preconditioning and Installation:*

7.7.1 Prior to the build-up or placement of an insulation test specimen into the apparatus, check the operation of any boundary plate height adjustment mechanisms and insertion clearances for the cold mass assembly with the vacuum chamber. Also check any load cell or equivalent force-measuring apparatus. Determine the uncompressed thickness of the specimen and then apply the required contact pressure or mechanical loading specified.

7.7.2 Details of the specimen conditioning are preferably given in the material specification. Preconditioning could include an oven with or without vacuum, or could be performed in the testing apparatus. If a vacuum oven facility is used, the specimen must be backfilled with dry nitrogen gas to atmospheric pressure prior to removing it from the oven. Preconditioning should be considered in preparation for non-vacuum or soft vacuum tests with the requirements and procedure defined by the user.

7.7.3 Further preconditioning after installation in the apparatus can be accomplished by vacuum pumping at room temperature or suitable elevated temperature (bake-out) and tracking the vacuum-temperature response overnight or for several days as required. For High Vacuum tests, the general procedure is outlined as follows: *(1)* an initial evacuation of the specimen to achieve a chamber pressure of approximately 100 Pa (750 millitorr), *(2)* backfilling the chamber to atmospheric pressure using dry nitrogen gas, repeating steps 1 and 2 (pressure cycles) as needed, *(3)* operating the heaters to maintain a temperature of approximately 330 K or higher for a minimum of 12 h, and *(4)* final evacuation to 10 mPa (7.5×10^{-5} torr) or less at ambient temperature for a minimum of 24 h. The number of pressure cycles, bake-out temperatures, durations, and ultimate vacuum level can be adjusted up or down as determined by the needs of the user and as verified for safe operation.

7.7.4 Close-out strips of fiberglass, MLI blankets, aerogel blankets, aerogel bulk-fill, or other materials are typically required for optimum performance of the test apparatus. The peripheral insulation materials provide for stability and control of the test. These features are especially important when using a single apparatus for a test series over a wide range of heat flux or vacuum levels. The close-out materials and techniques must be documented and repeated for the specific laboratory procedure being performed.

Provided by IHS under license with ASTM
No reproduction or networking permitted without license from IHS

Licensee=NASA Technical Standards 4/9972545004, User=Johnson, Wesley
Not for Resale, 11/19/2014 12:01:59 MST

8. Procedure

8.1 Subsequent to the installation, preconditioning, evacuation, and initial loading of the test specimen as specified in Section 7, adjust the *WBT* and *CVP* to the values desired for the test. The next step is to perform a cooldown of the system followed by the filling the test chamber and the guard chambers, as applicable. After the cryogen inside the cold mass chambers has stabilized, the test begins by monitoring the flow rate of the boiloff gas and maintaining a constant backpressure to the chambers. The test continues until equilibrium conditions have been effectively achieved over a sufficient period of time to confirm the final boil-off flow rate. Data recording includes temperatures, flow rate, and *CVP* at suitable intervals (from 60 to 360 s, for example) as desired.

8.2 The density of the gas is taken for standard temperature and pressure (STP). Typically, a transfer standard mass flow meter is used to measure the boiloff flow rate. These flow meters are referenced to STP. Sufficient lengths of tubing between the apparatus and the flow meter will further ensure that the accounting for gas temperature is complete.

8.3 Other key operational considerations include liquid supply, liquid levels, flow rate monitoring, atmospheric pressure modulation damping, back-pressure control, and heater system controls.

8.4 Temperature sensors should be thermally anchored and located to provide visibility as to temperature stability through the thickness and minimal transverse temperature gradients.

8.5 Steady-state is defined as a steady indication of flow rate coincident with the cryogen level in the proper range, steady indications of temperatures at all locations through the thickness of the test specimen, and a steady *CVP*. Depending on the level of heat flux, a steady-state condition may require hours or days to achieve. A stable state of the system is indicated by slight oscillation of the temperature sensors with no overall trend in their average value. In addition, the thermometer data should be changing by no more than the intrinsic uncertainty of the sensors over a 1 h period. Further information on the analysis of boiloff flow rate stability for cryogenic tank thermal performance testing is found in ISO 21014.

8.6 *Electrical Power*—Subsequent to the installation of the test specimen and evacuation of the chamber, cool down and fill the test chamber. Apply the desired heater power to maintain the target ambient temperature and specimen temperatures. Admit atmosphere analogue gases to test environment chamber if required. Continue the test until equilibrium conditions have been effectively achieved. Record all temperatures, electrical power, and *CVP* at appropriate intervals as required.

8.7 *Calibration*—Prior to each test or periodically if in continuous use, leak check the measuring chambers and all associated plumbing lines using helium gas or by vacuum decay. Calibrate the apparatus instrumentation and data recording equipment to ensure that the required measurement accuracies are being achieved. Appropriate calibration intervals for the instrumentation and related equipment are determined by the user.

8.7.1 Calibrate the primary measurement temperature sensors with secondary standards at several temperature values over the full operating range.

8.7.2 Calibrate the load cell or equivalent apparatus that is used to measure mechanical compressive pressures imposed on the test specimen over the full operating load range using secondary standard cells or dead weights. Perform this calibration with the load cell at the anticipated test temperature.

8.7.3 For flat plate apparatus, calibrate the system used to measure the hot and cold boundary plate separation by placing precision-machined gauge blocks between the plate surfaces. Then raise or lower the plates until solid contact has been established. Perform this calibration with hot and cold boundary surface temperatures initially representative of those to be used in actual testing or provide adequate compensation for thermal contraction based on documented mechanical calculations.

8.7.4 Calibrate the flowmeter by comparison of its output at flow rate over the entire anticipated range, using the gas to be measured during the test with that from a secondary standard flowmeter.

8.7.5 Calibrate the entire apparatus by introducing known quantities of thermal energy which simulate heat flux values over the anticipated range for actual tests and by comparing these energy values with those calculated from steady-state measured data.

9. Calculation

9.1 The heat flow rate (Q) is the basis for calculating the thermal properties including effective thermal conductivity (k_e), or system thermal conductivity (k_s), and heat flux (q). Calculations of k_e or k_s are highly sensitive to the thickness of the test specimen. The thickness, as-tested, must be carefully measured or calculated with explanations of any assumptions taken. The measure of heat flow rate is fundamentally different between boiloff and electrical power methods. The subsequent calculation of thermal properties is basically the same, according to the respective geometries (cylindrical or flat plate). Further details on calculations are given in Practice C1045. Test Method C335 also includes information for steady-state calculations of cylindrical geometries for large temperature differences.

9.2 *Boiloff*—The symbols used for calculation of thermal properties from boiloff testing are given in Table 2.

TABLE 2 Symbols Used for Calculation of Thermal Properties from Boiloff Testing

Symbol	Description	Unit
V_g	Volumetric Flow Rate of Gaseous Nitrogen	m^3/s
ρ_g	Density of Gaseous Nitrogen	kg/m^3
h_{fg}	Heat of Vaporization	J/g
d_o	Outer diameter of insulation system	m
d_i	Inner diameter of insulation system	m
x	Thickness of insulation system	m
L_e	Length, effective heat transfer (cylindrical)	m
d_e	Diameter, effective heat transfer (flat plate)	m
A_e	Area, effective heat transfer area	m^2
ΔT	Temperature difference (*WBT* – *CBT*)	K

Provided by IHS under license with ASTM

No reproduction or networking permitted without license from IHS

Licensee=NASA Technical Standards 4/9972545004, User=Johnson, Wesley
Not for Resale, 11/19/2014 12:01:59 MST

9.2.1 Calculate the heat flow rate (Q) through the insulation test specimen as follows. The rate of the heat transfer through the insulation system into the cold-mass tank is directly proportional to the liquid nitrogen boiloff rate (volumetric flow rate of gaseous nitrogen at standtard temperature and pressure (STP)) as shown by Eq 1.

$$Q = V_{gSTP}\rho_{gSTP}h_{fg}\left(\frac{\rho_f}{\rho_{fg}}\right) \quad (1)$$

NOTE 2—This analysis assumes that all heat flow to the calorimeter goes to vaporizing the liquid and none of it sensibly heats the vapor. This vapor heating effect can be neglected for liquid nitrogen calorimeters with small ullage spaces (less than approximately 75% of the total volume). The error due to vapor heating is estimated to be less than 0.1 percent when applying the results of the study by Jacobs (**34**).

NOTE 3—The heat of vaporization of the cryogen is the largest source of uncertainty and is typically taken to be a 2 % uncertainty for liquid nitrogen. The repeatability should of course be high and other factors such as surface finish of the interior cold mass and overall cleanliness of the cryogen are considered to be dominant.

NOTE 4—The variation in boiloff flow rate is primarily determined by the states of the liquid masses in each of the cold mass chambers. The liquid can be stratified, mixed, or in transition. For steady-state measurement to be achieved all liquid masses must be either stratified or mixed; this condition is reached only by the inherent design of the cold mass assembly. Another important factor in boiloff flow rate stability is the regional variations and twice-daily fluctuations in atmospheric pressure. For very low heat flux rates this fluctuation can cause substantial variation unless systematic controls are implemented to counteract this effect.

9.2.2 Calculate the effective thermal conductivity (k_e) or system thermal conductivity (k_s) through the insulation test specimen as follows. The value for k_e or k_s is determined from Fourier's law for heat conduction as given by Eq 2 through a cylindrical wall, by Eq 3 through a spherical surface, and by Eq 4 through a flat plate.

Cylindrical:

$$k_e = \frac{Q\ln\left(\frac{d_o}{d_i}\right)}{2\pi L_e \Delta T} \quad (2)$$

Spherical:

$$k_e = \frac{Qx}{\pi d_o d_i \Delta T} \quad (3)$$

Flat Plate:

$$k_e = \frac{4Qx}{\pi d_e^2 \Delta T} \quad (4)$$

9.3 *Electrical Power*—The symbols used for calculation of thermal properties from electrical power testing are given in Table 3.

9.3.1 Calculate the heat flow rate (Q) through the insulation test specimen as follows. The rate of the heat transfer through the insulation system into the cold mass is directly proportional to the heater electrical power as shown by Eq 5.

$$Q = \mathrm{UI}\eta_{heater} - Q_{loss} \quad (5)$$

TABLE 3 Symbols Used for Calculation of Thermal Properties from Power Testing

Symbol	Description	Unit
U	Voltage (volts)	V
I	Current (amperes)	A
η_{heater}	Heater power constant	---
Q_{loss}	Heater power loss	W
x	Thickness of insulation system	m
A_e	Area, effective heat transfer	m^2
ΔT	Temperature difference (*WBT* – *CBT*)	K

9.4 Calculate effective thermal conductivity (k_e) as follows:

$$k_e = \frac{Qx}{A_e \Delta T} \quad (6)$$

9.5 *Total System Thermal Conductivity (k_s)*—The calculation for total system thermal conductivity (k_s) follows the same calculation as for k_e. In some cases, the intent may be to calculate both values according to their distinct boundary temperatures and therefore estimate the effect of the ancillary elements (supporting structures, penetrations, feedthroughs, attachments, etc.) in relation to the thermal performance of the insulation itself.

9.6 *Heat Flux (q)*—The heat flux (q) is calculated by dividing the total heat transfer rate by the effective area of heat transfer. For cylindrical geometries, the effective heat transfer area (A_e) will be the mean area between the two concentric cylinders and thus the heat flux in this case is in fact the mean heat flux. Calculate heat flux as follows:

$$q = \frac{Q}{A_e} \quad (7)$$

10. Report

10.1 The thermal performance values for k_e (or k_s) and q shall include a reporting of the *WBT*, *CBT*, *CVP*, and residual gas composition (if any). Both thermal conductivity and heat flux can be reported, although only one or the other is usually required. Values for as-tested thickness and density are also usually required. The data can also be reported with the mean temperature (T_m), but not apart from including the *WBT* and *CBT*. The report should include a statement of the uncertainty of each reported variable. A discussion of the significant error factors involved can also be included.

10.2 Data shall be presented in tabular and/or graphical form depending on the type of testing performed. The variation of thermal conductivity and/or heat flux with cold vacuum pressure can be plotted and included in the report if testing over a range of vacuum levels is performed. Examples of graphical data presentations are given in Figs. 6 and 7. An example of the tabular form of reporting the cryogenic testing of an MLI system is given in Table 4.

Provided by IHS under license with ASTM
No reproduction or networking permitted without license from IHS

Licensee=NASA Technical Standards 4/9972545004, User=Johnson, Wesley
Not for Resale, 11/19/2014 12:01:59 MST

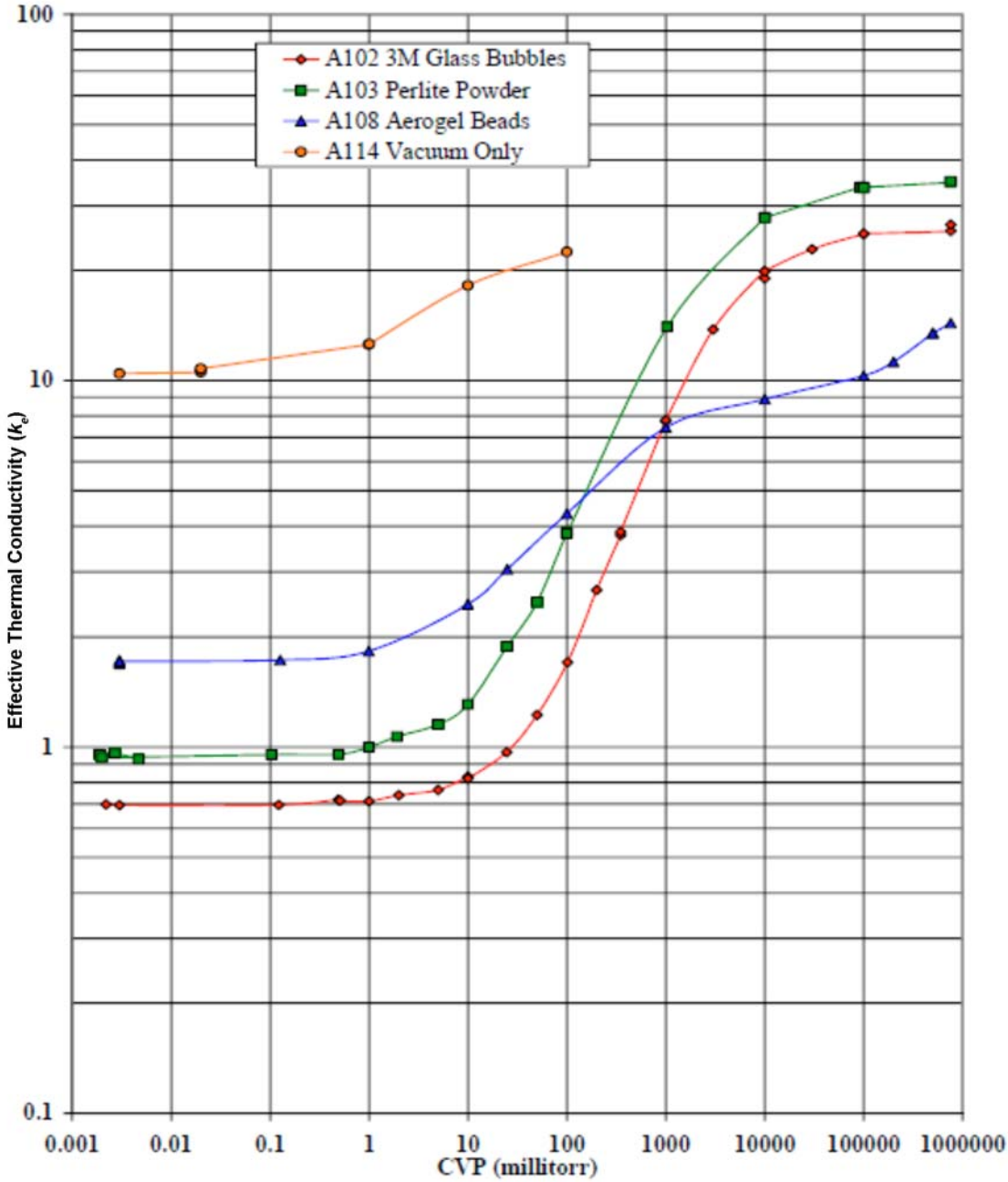

The boundary temperatures are approximately 78 K and 290 K. The residual gas is nitrogen (33).

FIG. 6 Example of k_e Graphical Report: Variation of Effective Thermal Conductivity (k_e) with Cold Vacuum Pressure for Bulk-Fill Cryogenic Insulation Materials

10.3 Reporting should include a description of the material preparation and conditioning steps performed in support of the thermal test measurements. Preconditioning, bake-out temperature, overall vacuum pumping time, and other details should be included.

10.4 Methodologies used in thickness and density measurements are usually important in calculating a result and should be adequately documented and described.

Provided by IHS under license with ASTM
No reproduction or networking permitted without license from IHS
Licensee=NASA Technical Standards 4/9972545004, User=Johnson, Wesley
Not for Resale, 11/19/2014 12:01:59 MST

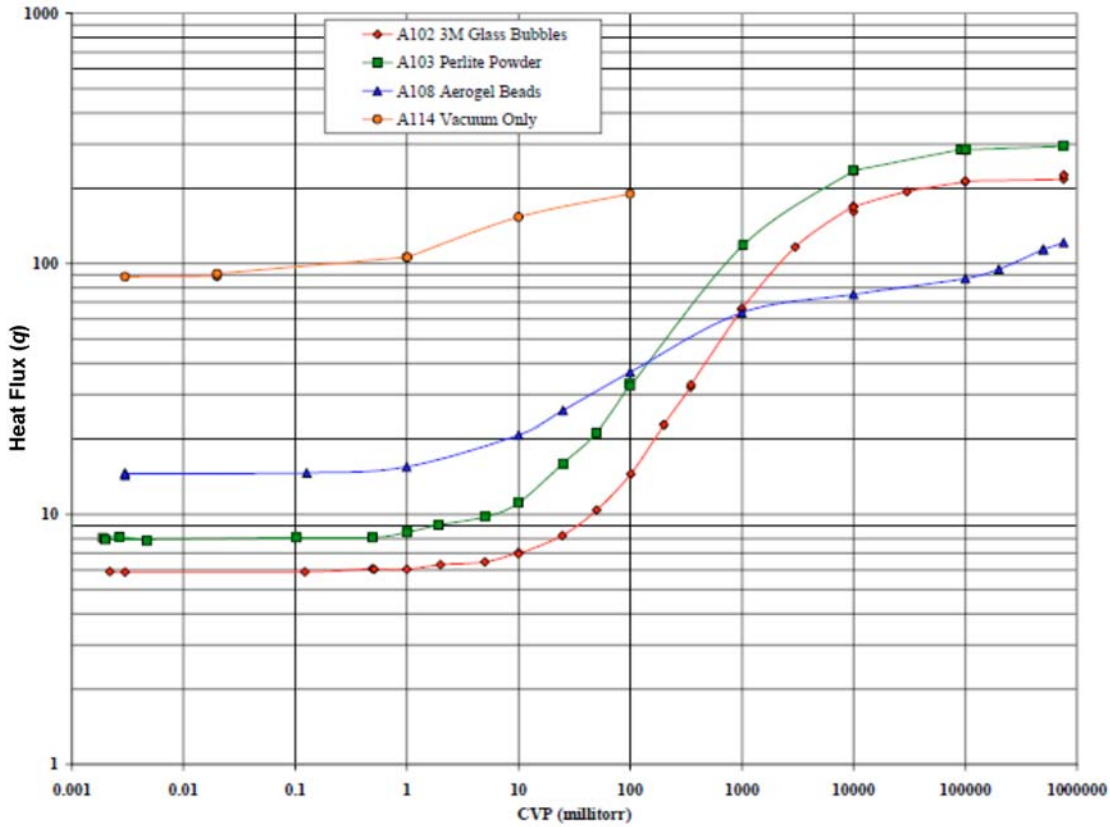

The boundary temperatures are approximately 78 K and 290 K. The residual gas is nitrogen (33).

FIG. 7 Example of Heat Flux Graphical Report: Variation of Heat Flux (*q*) with Cold Vacuum Pressure for Bulk-Fill Cryogenic Insulation Materials

TABLE 4 Example of Data Reporting in Tabular Form for a Multilayer Insulation (MLI) System Tested Using the Cryogenic Boiloff Method (11)

A245 MLI Baseline (10, 1.6, 6.4) Mylar & Poly Fabric – Original System	Test	CVP (millitorr)	Flow (sccm)	WBT (K)	CBT (K)	Q (W)	q (W/m^2)	k_e (mW/m-K)
Layers = 10 pairs	1	0.004	76	293.1	78	0.316	1.00	0.030
Layer density = 1.6 layers/mm	2	0.050	130	293.0	78	0.536	1.70	0.050
Total thickness = 6.4 mm	3	0.132	146	292.9	78	0.603	1.91	0.057
A_e = 0.316 m^2	4	0.326	171	293.0	78	0.706	2.24	0.066
Total mass = 126 g	5	1.02	277	292.9	78	1.148	3.64	0.108
System density = 53 kg/m^3	6	9.96	1456	292.6	78	6.030	19.10	0.567
Initial Pumping & Heating = 24 hours	7	99	7684	292.8	78	31.80	100.7	2.99

11. Keywords

11.1 boiloff calorimeter; cold boundary temperature; cold vacuum pressure; compressive pressure; cryocooler; cryogenic piping; cryogenic tank; cryogenic temperatures; emittance; evacuated insulations; heat flow; heat flux; heater power measurement; large temperature difference; multilayer insulation; residual gas; steady-state; thermal conductance; thermal conductivity; thermal performance; thermal resistance; thermal transmission; vacuum; warm boundary temperature

Provided by IHS under license with ASTM
No reproduction or networking permitted without license from IHS

Licensee=NASA Technical Standards 4/9972545004, User=Johnson, Wesley
Not for Resale, 11/19/2014 12:01:59 MST

ANNEXES

(Mandatory Information)

A1. CYLINDRICAL BOILOFF CALORIMETER (ABSOLUTE)—MINIMUM REQUIREMENTS

A1.1 The cylindrical boiloff calorimeter (absolute) is a cylindrical test apparatus that measures the absolute thermal performance of an insulation test specimen as shown in Fig. A1.1. Typical dimensions are a cold mass of 167 mm in diameter by 900 mm in length and providing thermal performance for specimens up to 50 mm thick. The test chamber is thermally guarded by upper and lower chambers. A heater assembly provides power input for the warm boundary temperature control. A copper sleeve assembly makes it easier to test continuously rolled insulation products such as multilayer insulation.

A1.2 Heavy-wall stainless steel construction is used along with natural stratification of the cryogen to improve thermal stability and repeatability. This avoids several difficulties encountered previously, such as boiloff vapor condensation. The heat transfer caused by slightly different liquid temperatures within the cold mass is minimized by having independently filled chambers, combined with the method of thermal stabilization.

A1.3 Specimens may be tested in the form of blanket, bulk-fill, clamshell, multilayered, or continuously rolled insulation. A wrapping machine or copper sleeve arrangement allows continuously rolled specimens and facilitates the use of blanket specimens. A thin aluminum black cylindrical sleeve with a typical 25-mm annular gap allows testing of bulk-fill materials.

Surface Temperature Measurement	
Sensor	**Location**
VC1, VC2, VC3	Vacuum Can Temperature
T11, T12, T13	Warm Boundary Temperature (WBT)
T4 – T10	Insulation Layer Temperatures
T1, T2, T3	Cold Boundary Temperature (CBT)
CM1, CM2	Cold Mass Temperature

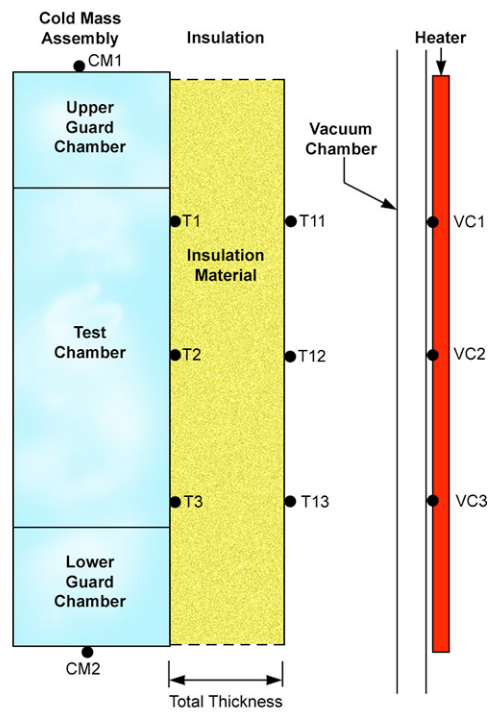

FIG. A1.1 Simplified Schematic of a Cylindrical Boiloff Calorimeter (Absolute) (29, 35)

A2. CYLINDRICAL BOILOFF CALORIMETER (COMPARATIVE)—MINIMUM REQUIREMENTS

A2.1 The cylindrical boiloff calorimeter (comparative) is a cylindrical test apparatus for measuring the comparative thermal performance of an insulation test specimen as shown in Fig. A2.1. Typical dimensions are a 132-mm-diameter by 500-mm-long cold mass and accepting test specimens up to 50 mm thick. A combination of monolithic aerogel disks and radiation shields (or other suitable high performance, stable insulation system) provides thermal guarding of the ends of the test chamber.

Provided by IHS under license with ASTM
No reproduction or networking permitted without license from IHS
Licensee=NASA Technical Standards 4/9972545004, User=Johnson, Wesley
Not for Resale, 11/19/2014 12:01:59 MST

A2.2 A heater assembly provides power input for the warm boundary temperature control. The entire cold-mass assembly is easily removed and mounted on a wrapping machine to make it easier to test MLI and other layered insulation materials.

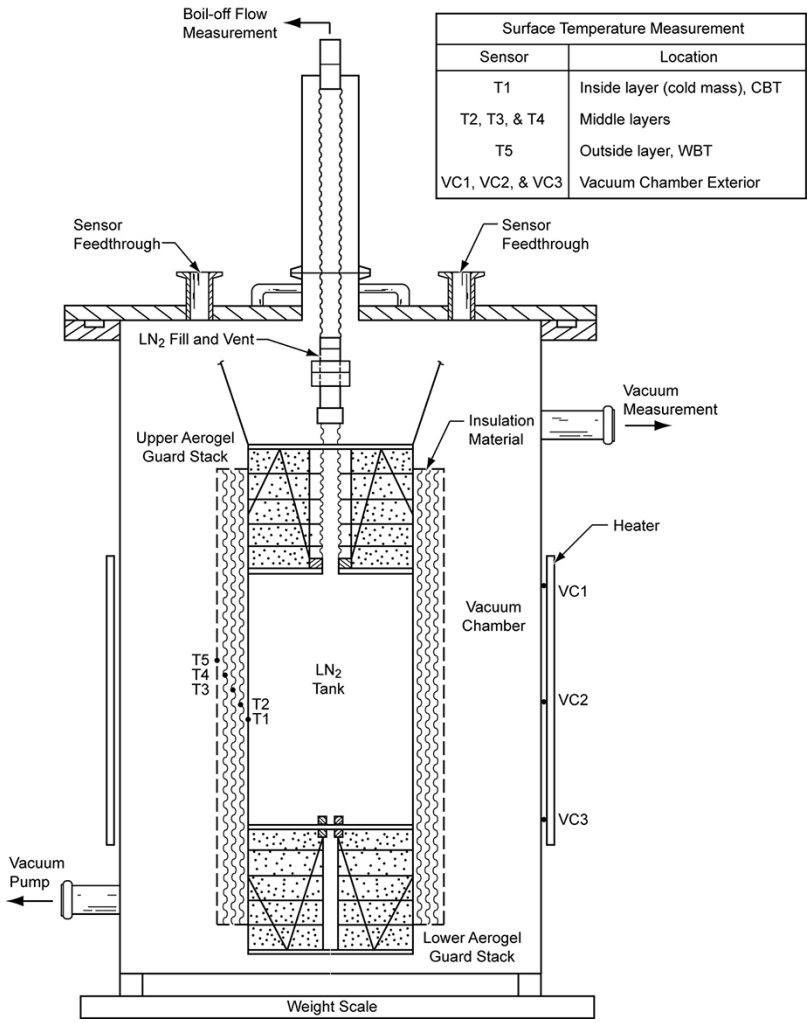

FIG. A2.1 Simplified Schematic of a Cylindrical Boiloff Calorimeter (Comparative) (29, 36)

A3. FLAT PLATE BOILOFF CALORIMETER (ABSOLUTE)—MINIMUM REQUIREMENTS

A3.1 The flat plate boiloff calorimeter (absolute) is a flat bottom test apparatus for measuring the absolute thermal performance of an insulation test specimen. Typical dimensions allow accepting test specimens 200 mm in diameter by up to 30 mm thick. Temperature sensors are located on the side the apparatus in addition to the boundary temperatures. The test chamber is guarded by a cryogen chamber as shown in Fig. A3.1. System insulation materials provide additional thermal stability for testing over a wide range of environmental conditions. The cold-mass assembly can be configured for rigid or soft materials, with or without compressive loads.

Provided by IHS under license with ASTM
No reproduction or networking permitted without license from IHS

Licensee=NASA Technical Standards 4/9972545004, User=Johnson, Wesley
Not for Resale, 11/19/2014 12:01:59 MST

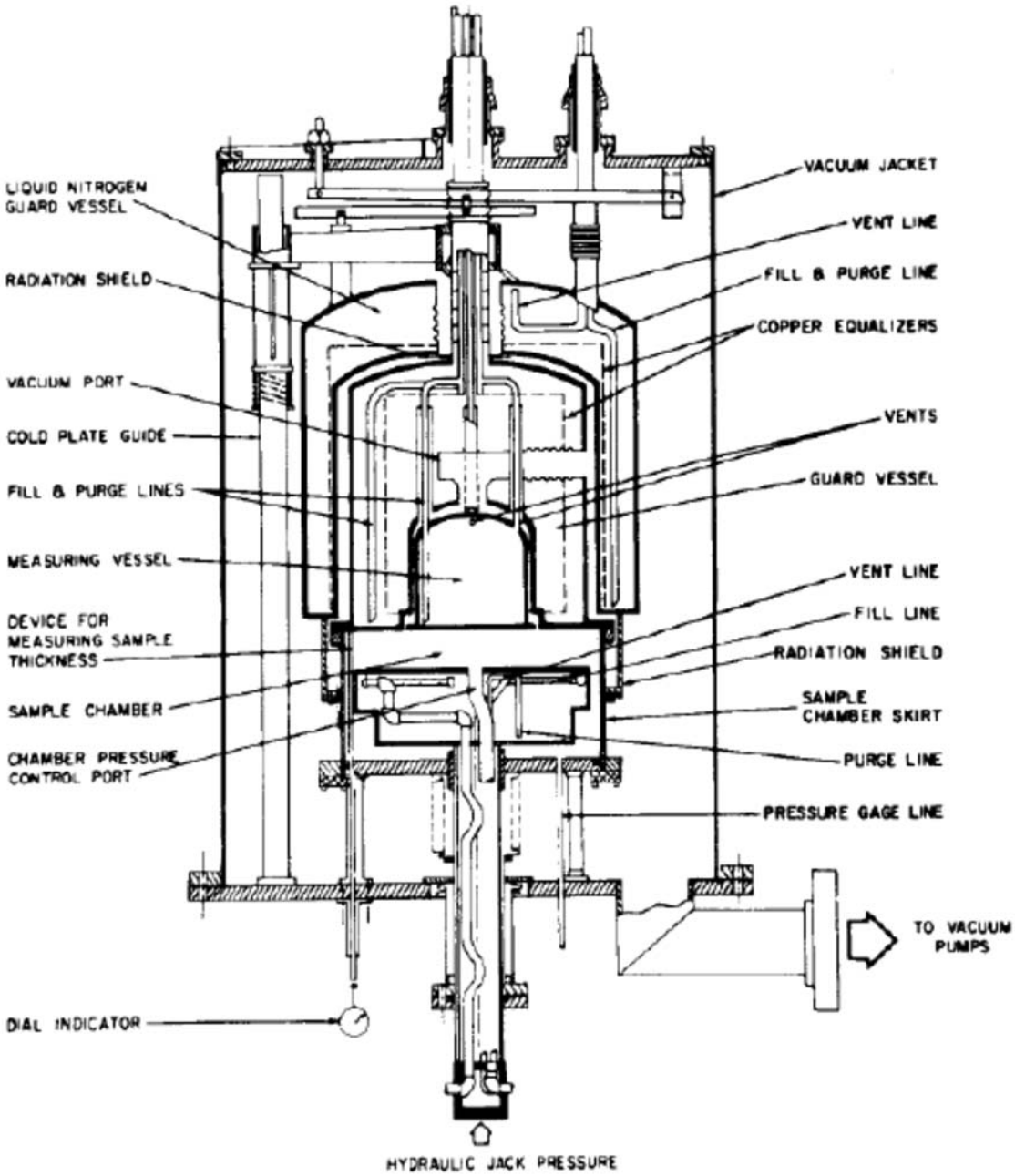

FIG. A3.1 Simplified Schematic of a Flat Plate Boiloff Calorimeter (Absolute) (16)

A4. FLAT PLATE BOILOFF CALORIMETER (COMPARATIVE)—MINIMUM REQUIREMENTS

A4.1 The flat plate boiloff calorimeter (comparative) is a flat bottom test apparatus for measuring the comparative thermal performance of an insulation test specimen. It can accept test specimens 200 mm in diameter by up to 30 mm thick. Fig. A4.1 locates temperature sensors on the apparatus. Two sets of radiation shield rings, together with bulk-fill aerogel, provide thermal guarding of the side of the cold mass. This calorimeter can be used for a wide range of materials and conditions. The cold-mass assembly can be configured for rigid or soft materials, with or without compressive loads.

Provided by IHS under license with ASTM
No reproduction or networking permitted without license from IHS

Licensee=NASA Technical Standards 4/9972545004, User=Johnson, Wesley
Not for Resale, 11/19/2014 12:01:59 MST

Surface Temperature Measurement	
Sensor	**Location**
T1, T3	Cold Boundary Temperature (CBT)
T2	Top of Cold Mass
T4, T5	Warm Boundary Temperature (WBT)
VC1, VC2, VC3	Vacuum Chamber Exterior
VC4, VC5, VC6	Heater Temperature

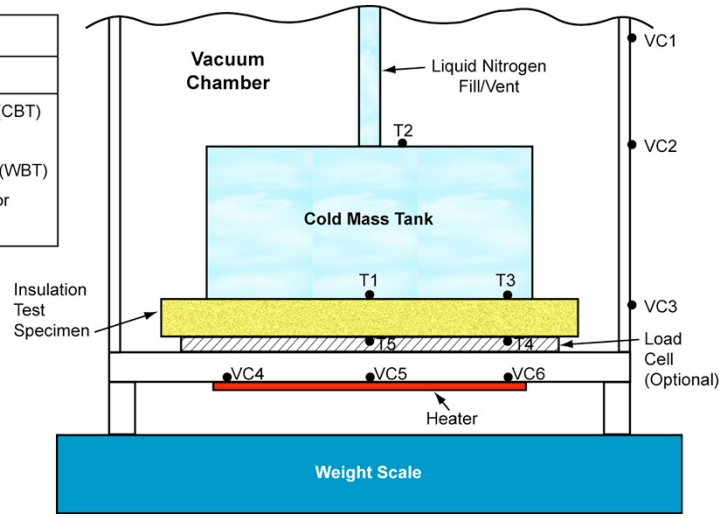

FIG. A4.1 Simplified Schematic of a Flat Plate Boiloff Calorimeter (Comparative) (29, 37)

A5. ELECTRICAL POWER CRYOSTAT APPARATUS (CRYOGEN-BASED)—MINIMUM REQUIREMENTS

A5.1 The cryogen-based electrical power cryostat apparatus (see Fig. A5.1) includes an isothermal specimen box made from a OFHC copper plate (6 mm thickness, typical). A cylindrical shell and bottom plates are all bolted together forming an isothermal box around the specimen with a top plate rest on top of the specimen. Flexible copper straps (40-mesh, typical) connect the top plate to the box ensuring thermal equilibrium. The hot plate is typically equipped with two temperature sensors (for example, a resistance temperature detector and a silicon diode) and an electric heater. These three items are each mounted inside a small instrumentation disc that mounts wholly inside the hot plate. The specimen box is equipped with a silicone diode thermometer (or other suitable temperature sensor) and an electrical heater. The hot plate heater is used to apply heat for the thermal conductivity measurements; the specimen box heater assists in raising the overall temperature. The box is thermally connected to an isothermal (OFHC copper) vacuum-tight chamber in which it is suspended. This chamber is further placed inside the vacuum can and equipped with a heater and a suitable temperature sensor.

A5.2 This arrangement allows variation of the temperature of the specimen chamber and its contents well above that of the cryogen bath surrounding the vacuum can (liquid nitrogen or liquid helium) if necessary. Two cylindrical boxes (typically 150 and 200 mm diameter) plus two square boxes, each with a corresponding hot plate, have been constructed. To connect the instrumentation from the hot plate to an outside terminal, four copper and sixteen manganin wires are used. These wires, typically 0.8 m long and 0.13 mm in diameter, run in a spiral through the specimen from the hot plate to a terminal just outside the box.

A5.3 The center of each test specimen half is machined to make room for the isothermal copper hot plate which is placed in between the two halves, thus assuring that all of the heat passes through the specimen, except for that conducted along the heater wires which are sunk to the cryogen bath (4.2 K for liquid helium). Typical dimensions include a test specimen diameter of either 152 or 203 mm and up to 50 mm high; the round hot plate has a diameter of 140 mm and is 9 mm thick. The insides of the round isothermal copper box touch the external surfaces of the specimen sandwich.

Provided by IHS under license with ASTM
No reproduction or networking permitted without license from IHS

Licensee=NASA Technical Standards 4/9972545004, User=Johnson, Wesley
Not for Resale, 11/19/2014 12:01:59 MST

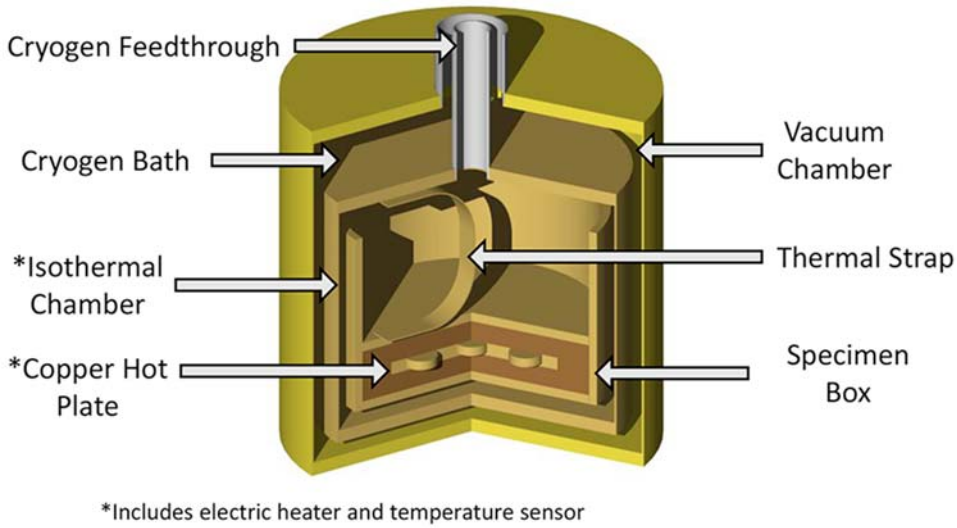

FIG. A5.1 General Arrangement of a Cryogen-Based Electrical Power Cryostat Apparatus (30)

A6. ELECTRICAL POWER CRYOSTAT APPARATUS (CRYOCOOLER-BASED)—MINIMUM REQUIREMENTS

A6.1 The cryocooler-based electrical power cryostat apparatus includes an experimental chamber that is thermally linked to an appropriate cryocooler refrigeration system. An example of such system for testing 204-mm diameter round disk type test specimens is shown in Figs. A6.1 and A6.2. This design employs an electrically heated plate sandwiched between a pair of specimens. Each specimen is then enclosed by a cold plate. The method works by creating axial heat transfer through the insulation specimen(s). By adding a known heat flux to the hot plate, a temperature gradient within the insulation specimen is formed. A heat sink is necessary at the cold plate to maintain the temperature gradient. The subsequent temperatures at each side of the specimens are measured when the system reaches steady-state.

Provided by IHS under license with ASTM
No reproduction or networking permitted without license from IHS

Licensee=NASA Technical Standards 4/9972545004, User=Johnson, Wesley
Not for Resale, 11/19/2014 12:01:59 MST

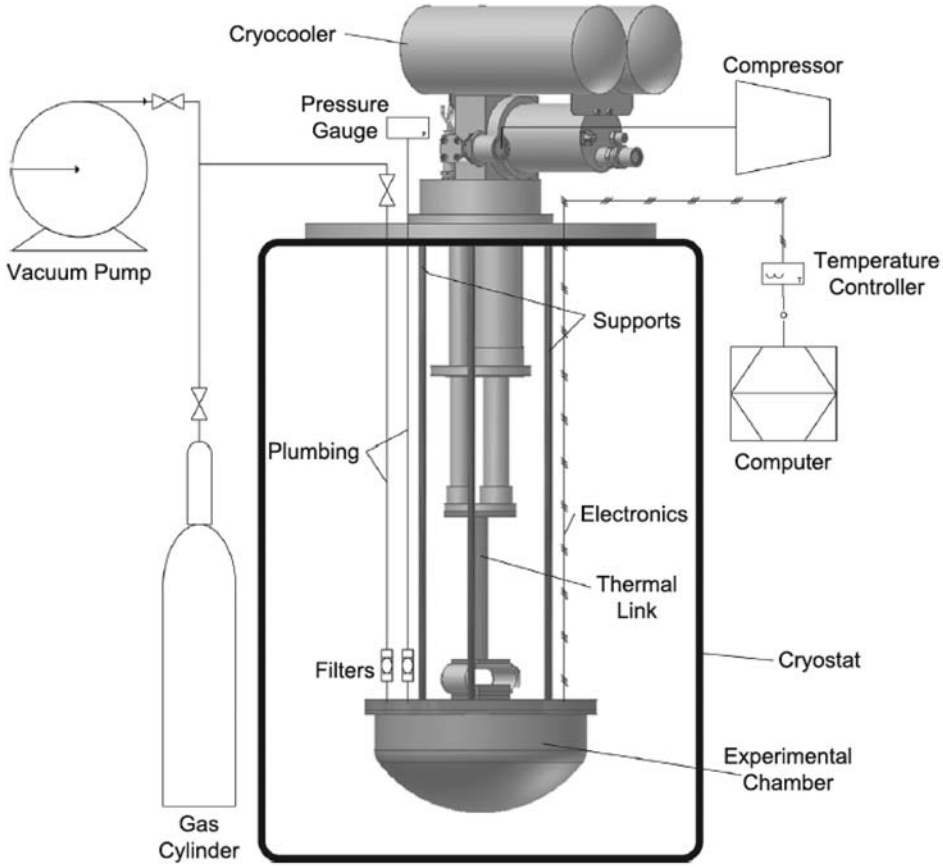

FIG. A6.1 General Arrangement of an Electrical Power Cryostat Apparatus (Cryocooler-Based) (31)

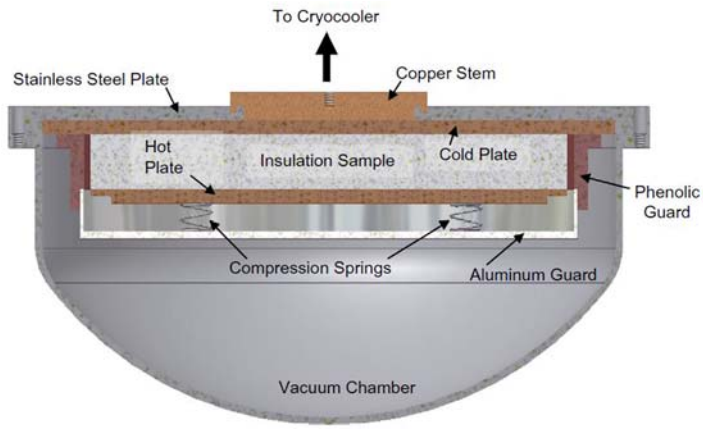

FIG. A6.2 The Experimental Chamber of a Cryocooler-Based Electrical Power Cryostat Apparatus (31)

Provided by IHS under license with ASTM
No reproduction or networking permitted without license from IHS

Licensee=NASA Technical Standards 4/9972545004, User=Johnson, Wesley
Not for Resale, 11/19/2014 12:01:59 MST

APPENDIX

(Nonmandatory Information)

X1. RATIONALE

X1.1 This standard guide for thermal performance testing of cryogenic insulation systems includes both boiloff calorimetry and electrical power methods of testing. A prior test method Standard Test Method for Heat Flux through Evacuated Insulations Using a Guarded Flat Plate Boiloff Calorimeter, C745, was not renewed in 2009. The prior standard was primarily intended for use in determining heat flux through evacuated multilayer insulation systems for cryogenic applications. The apparatus had come about through the NASA space program work of the 1960s and early 1970s, but its complexity and limitations had diminished its wide-spread use. This guide captures the pertinent aspects of the prior standard but greatly expands the applicability to different test geometries, environments, materials, and methodologies that are now in use.

X1.2 The approaches, techniques, and methodologies given in this guide can be adapted for use in the cryogenic thermal performance testing of cryogenic pipelines (**38**). The first consideration is the mounting and thermal guarding of the ends of the pipeline test specimen to eliminate or acceptably reduce the parasitic heat leaks due to the end effects. The warm boundary temperature of the pipeline can be fixed by electrical heaters and an external thermal insulation wrap. The thermal performance test can be performed by two methods: cryogen boiloff (static) or flow-through (dynamic). Use of the boiloff method follows the same general principles as given in this Guide. The flow-through method requires the measurement of the inlet and outlet temperatures of the cryogenic process fluid as well as the mass flow rate through the pipeline. Providing the basis for calculating the total heat load to the pipeline, the temperature rise must be large enough for practical measurement.

X1.3 The approaches, techniques, and methodologies given in this guide can be also be adapted for use in the cryogenic thermal performance testing of cryogenic tanks (**28**). The first step is to calculate the total parasitic heat load due to solid thermal conduction through support fixtures and connecting piping. The warm boundary temperature of the pipeline can be fixed by electrical heaters and an external thermal insulation wrap. The thermal performance test can be performed by the cryogen boiloff method following the same general principles as given in this Guide. The liquid level and ullage vapor thermal effects must be carefully considered when devising the test procedure. The complete tank conditions, including liquid level, must be stated as part of the thermal performance results.

REFERENCES

(1) Tye, R.P., "Measurement of thermal insulation performance: The challenge of the next decade," *Intl. J. of Thermophysics*, 11(2) (1990).

(2) Kaganer, M.G., *Thermal Insulation in Cryogenic Engineering*, Israel Program for Scientific Translations Ltd., Israel, pp. 127-130 (1969).

(3) Fesmire, J. E., Coffman, B. E., Meneghelli, B. J., Heckle, K. W., "Spray-On Foam Insulations for Launch Vehicle Cryogenic Tanks," *Cryogenics*, doi:10.1016/j.cryogenics. 2012.01.018.

(4) Augustynowicz, S.D., Fesmire, J.E., and Wikstrom, J.P., "Cryogenic Insulation Systems," *20th International Congress of Refrigeration*, no. 2000-1147, International Institute of Refrigeration, Paris, 2000.

(5) Black, I. A., Fowle, A.A., and Glaser, P.E., "Development of High Efficiency Insulation," *Advances in Cryogenic Engineering*, Vol. 5, 1960, p. 181.

(6) Babjack, S. J., Carr, R.W., Cohen, A.D., Lankton, C.S., Ludwig, R., "Planetary Vehicle Thermal Insulation Systems Final Report," Jet Propulsion Laboratory Contract 9-51537, General Electric Co. Report DJN: 68SD4266, June 1968.

(7) Laa, C., Hirschl, C., and Stipsitz, J., "Heat flow measurement and analysis of thermal vacuum insulation," *Advances in Cryogenic Engineering*, Vol. 53B, American Institute of Physics, New York, 2008, pp. 1351-1358.

(8) Augustynowicz, S.D. and Fesmire, J.E., "Cryogenic Insulation System for Soft Vacuum," *Advances in Cryogenic Engineering*, Vol. 45, Kluwer Academic/Plenum Publishers, New York, 2000, pp. 1691-1698.

(9) Keller, C., Cunnington, G., and Glassford, A., "Final Report: Thermal performance of multilayer insulations, NASA CR-134477 (1974)," 4-16 to 4-44.

(10) Bapat, S.L., Narayankhedkar, K.G., and LuKose, T.P., "Experimental investigations of multilayer insulation," *Cryogenics*, 30, pp. 711-719 (1990).

(11) Fesmire, J.E. and Johnson, W.L., "Thermal Performance Data for Multilayer Insulation Systems Tested between 293 K and 77 K," *Space Cryogenics Workshop*, Alyeska, AK, June 2013.

(12) Thermal Conductivity Measurements of Insulating Materials at Cryogenic Temperatures, ASTM STP 411, 1967.

(13) Carroll, W. F., and Stimpson, L. D., "Multilayer Insulation Test Facility," Jet Propulsion Laboratory Space Programs Summary 37–59, Vol. III, October 31, 1969, pp. 156–158.

(14) Shu, Q.S., Fast, R.W., and Hart, H.L., "An experimental study of heat transfer in multilayer insulation systems from room temperature to 77 K," *Advances in Cryogenic Engineering* (1986), 455-463.

(15) Dube, W.P., L.L. Sparks, and A.J. Slifka, "NBS boil-off calorimeter for measuring thermal conductivity of insulating materials," *Advances in Cryogenic Engineering (Materials)*34:67-73, 1988.

(16) Webb, J.E., "Apparatus for Measuring Thermal Conductivity," U.S. Patent No. 3,242,716, issued March 29, 1966.

(17) Fesmire, J.E., Augustynowicz, S.D., Heckle, K.W., and Scholtens, B.N., "Equipment and Methods for Cryogenic Thermal Insulation Testing," *Advances in Cryogenic Engineering*, Vol. 49, American

Provided by IHS under license with ASTM

No reproduction or networking permitted without license from IHS

Licensee=NASA Technical Standards 4/9972545004, User=Johnson, Wesley
Not for Resale, 11/19/2014 12:01:59 MST

Institute of Physics, New York, 2004, pp. 579-586.

(18) Hale, D. V., Reny, G. D., Hyde, E. H., "A Guarded Electrical Cylinder Calorimeter for Measuring Thermal Conductivity of Multilayer Insulation," *Advances in Cryogenic Engineering*, Vol. 15, 1970, p. 324.

(19) Hammond, M. B., Jr., "A Temperature-Decay Method for Determining Superinsulation Conductivity," *Advances in Cryogenic Engineering*, Vol. 16, 1971, p. 143.

(20) Mazzone, L., Ratcliffe, G., Rieubland, J.M., and Vandoni, G., "Measurements of multi-layer insulation at high boundary temperature, using a simple non-calorimetric method," International Cryogenic Engineering Conference, Grenoble, July 2002.

(21) Black, I. A., and Glaser, P. E., "The Performance of a Double-Guarded Cold-Plate Thermal Conductivity Apparatus," *Advances in Cryogenic Engineering*, 1964, Vol. 9, pp. 52–63.

(22) Boroski, W.N., Kunzelman, R.J., Ruschman, M.K., and Schoo, C.J., "Design and Calibration of a Test Facility for MLI Thermal Performance Measurements Below 80K," *Advances in Cryogenic Engineering*, Vol. 37A, Plenum Press, New York (1991) p. 275.

(23) Darve, Ch., Ferlin, G., Gautier, M., and Williams, L.R., "Thermal performance measurements for a 10-meter LHC dipole prototype (Cryostat Thermal Model 2), Internal report, LHC-Project-Note-112 (1997)."

(24) Dufay, L., Policella, C., Rieubland, J. M., and Vandoni, G., "A large-scale test facility for heat load measurements down to 1.9 K," *Advances in Cryogenic Engineering* (2000), 4798-105.

(25) Fesmire, J.E. and Augustynowicz, S.D., "Insulation Testing Using Cryostat Apparatus With Sleeve," *Advances in Cryogenic Engineering*, Vol. 45, Kluwer Academic / Plenum Publishers, New York, 2000, pp. 1683-1690.

(26) Demko, J.A., Fesmire, J.E., and Augustynowicz, S.D., "Design tool for cryogenic thermal insulation systems," in *Advances in Cryogenic Engineering*, Vol. 53A, American Institute of Physics, New York, 2008, pp. 145-151.

(27) Fesmire, J. E. and Augustynowicz, S.D., "Thermal Performance of Cryogenic Piping Multilayer Insulation in Actual Field Conditions," *Cryogenics* 2002, International Institute of Refrigeration, Refrigeration Science and Technology Proceedings, Praha Czech Republic, April 2002, pp. 94-97.

(28) Sass, J.P., Fesmire, J.E., Nagy, Z.F., Sojourner, S.J., Morris, D.L. and Augustynowicz, S.D., "Thermal performance comparison of glass microsphere and perlite insulation systems for liquid hydrogen storage tanks," *Advances in Cryogenic Engineering*, Vol. 53B, American Institute of Physics, New York, 2008, pp. 1375-1382.

(29) Fesmire, J.E., Augustynowicz, S.D., Scholtens, B.E., and Heckle, K.W., "Thermal performance testing of cryogenic insulation systems," *Thermal Conductivity 29*, DEStech Publications, Lancaster, PN, 2008, pp. 387-396.

(30) Helvensteijn, B. P. M., Salerno L. J.; Roach P. R.; Kittel P.; and White S. M., "Measuring thermal conductivity of insulators at cryogenic temperatures," *Advances in Cryogenic Engineering*, American Institute of Physics, New York, 2000, vol. 45B, pp. 1919-1924.

(31) Barrios, M. and Van Sciver, S.W., "An apparatus to measure thermal conductivity of spray-on foam insulation," *Advances in Cryogenic Engineering*, Vol. 55B, American Institute of Physics, New York, 2010, pp. 938-945.

(32) Salerno, L. J., and Kittel, P., "Thermal Contact Conductance," *Cryogenic Handbook*, J. Weisend, Ed., Taylor & Francis, PA (1998), also NASA TM 110429 (1997).

(33) Scholtens, B.E., Fesmire, J.E., Sass, J.P., and Augustynowicz, S.D., "Cryogenic thermal performance testing of bulk-fill and aerogel insulation materials," *Advances in Cryogenic Engineering*, Vol. 53A, American Institute of Physics, New York, 2008, pp. 152-159.

(34) Jacobs, Robert B., "Theory of Boiloff Calorimetry," *The Review of Scientific Instruments*, 35, No. 7, 1964, pp. 828-832.

(35) Fesmire, J.E. and Augustynowicz, S.D., "Methods of Testing Thermal Insulation and Associated Test Apparatus," US Patent 6,742,926, June 1, 2004.

(36) Fesmire, J.E. and Augustynowicz, S.D, "Multi-purpose Thermal Insulation Test Apparatus," US Patent 6,487,866 December 3, 2002.

(37) Fesmire, J.E. and Augustynowicz, S.D., "Thermal Insulation Testing Method and Apparatus," US Patent 6,824,306, November 30, 2004.

(38) Fesmire, J.E., Augustynowicz, S.D., and Nagy, Z.F., "Apparatus and Method for Thermal Performance Testing of Pipelines and Piping Systems," US Patent 6,715,914 April 6, 2004.

ASTM International takes no position respecting the validity of any patent rights asserted in connection with any item mentioned in this standard. Users of this standard are expressly advised that determination of the validity of any such patent rights, and the risk of infringement of such rights, are entirely their own responsibility.

This standard is subject to revision at any time by the responsible technical committee and must be reviewed every five years and if not revised, either reapproved or withdrawn. Your comments are invited either for revision of this standard or for additional standards and should be addressed to ASTM International Headquarters. Your comments will receive careful consideration at a meeting of the responsible technical committee, which you may attend. If you feel that your comments have not received a fair hearing you should make your views known to the ASTM Committee on Standards, at the address shown below.

This standard is copyrighted by ASTM International, 100 Barr Harbor Drive, PO Box C700, West Conshohocken, PA 19428-2959, United States. Individual reprints (single or multiple copies) of this standard may be obtained by contacting ASTM at the above address or at 610-832-9585 (phone), 610-832-9555 (fax), or service@astm.org (e-mail); or through the ASTM website (www.astm.org). Permission rights to photocopy the standard may also be secured from the ASTM website (www.astm.org/COPYRIGHT/).

Provided by IHS under license with ASTM
No reproduction or networking permitted without license from IHS
Licensee=NASA Technical Standards 4/9972545004, User=Johnson, Wesley
Not for Resale, 11/19/2014 12:01:59 MST