REVITALIZE CENTRAL CHILLED WATER FACILITY - ELECTRICAL

BUILDING 4473

MARSHALL SPACE FLIGHT CENTER, ALABAMA

INDEX OF DRAWINGS

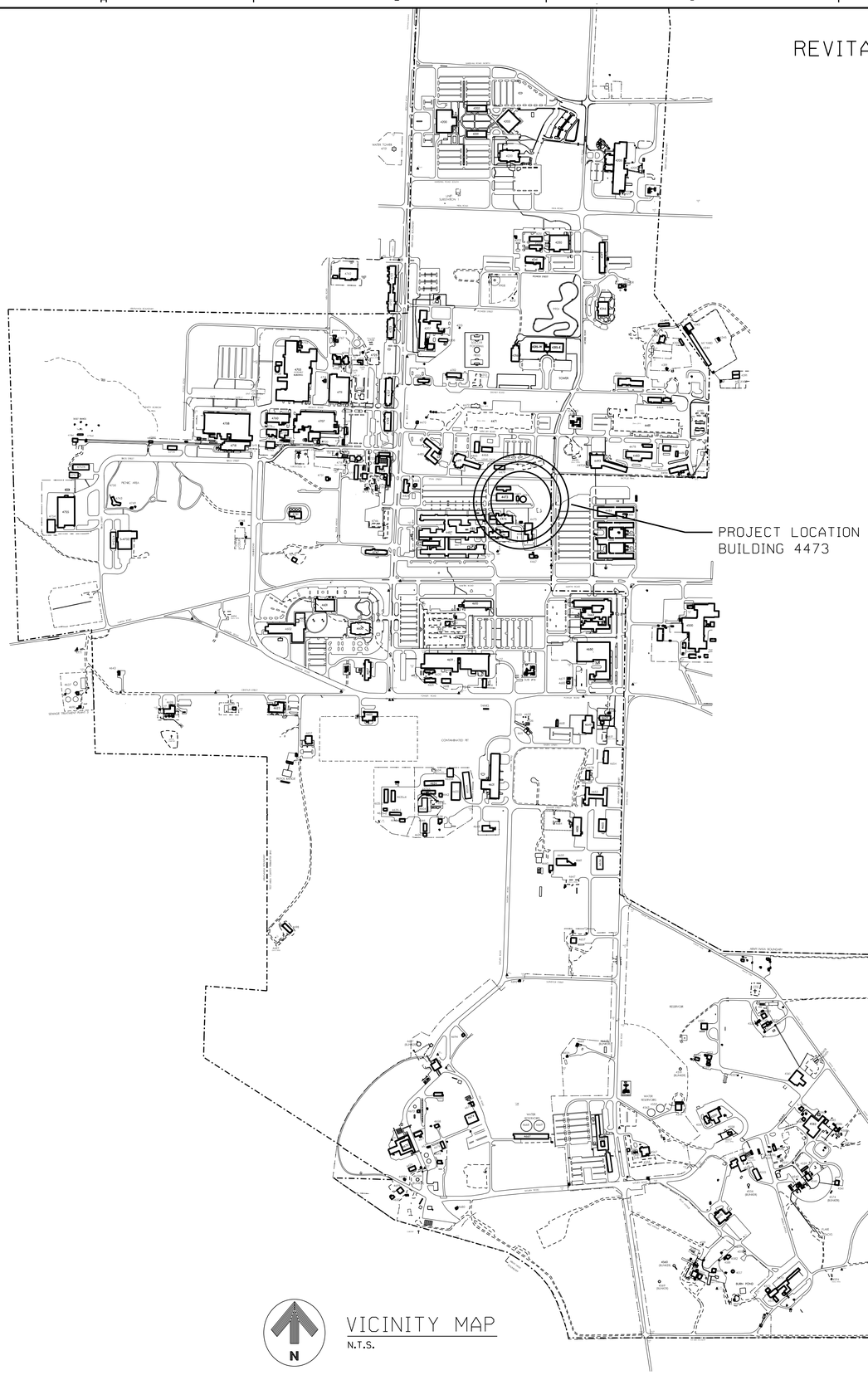

VICINITY MAP
N.T.S.

REF. NO.	SHEET TITLE	DRAWING NO.	REV.
X1	INDEX SHEET	FAC-AA-4473-X1	
	CIVIL		
C1	UNIT SUBSTATION 23, EXISTING CONDITIONS, DEMOLITION & NOTES	FAC-AA-4473-C1	
C2	ELECTRICAL SUBSTATION LAYOUT PLAN	FAC-AA-4473-C2	
C3	ELECTRICAL SUBSTATION GRADING PLAN	FAC-AA-4473-C3	
C4	SITE DETAILS	FAC-AA-4473-C4	
C5	CHAIN LINK FENCE DETAILS	FAC-AA-4473-C5	
	STRUCTURAL		
S1	STRUCTURAL - DETAILS FOR TRANSFORMER PAD	FAC-AA-4473-S1	
	ELECTRICAL		
E1	GENERAL NOTES, SYMBOL LIST AND ABBREVIATIONS	FAC-AA-4473-E1	
E2	EXISTING ONE LINE DIAGRAM	FAC-AA-4473-E2	
E3	UNIT SUBSTATION 23 - ONE LINE DIAGRAM	FAC-AA-4473-E3	
E4	MAIN POWER SUPPLY - ONE LINE DIAGRAM	FAC-AA-4473-E4	
E5	UNIT SUBSTATION 23 SITE PLAN	FAC-AA-4473-E5	
E6	UNIT SUBSTATION 23 EQUIPMENT LAYOUT PLAN	FAC-AA-4473-E6	
E7	UNIT SUBSTATION 23 GROUNDING PLAN	FAC-AA-4473-E7	
E8	UNIT SUBSTATION 23 LIGHTING PLAN	FAC-AA-4473-E8	
E9	UNIT SUBSTATION 23 CONTROL HOUSE	FAC-AA-4473-E9	
E10	UNIT SUBSTATION 23 ELEVATIONS 46KV STRUCTURE	FAC-AA-4473-E10	
E11	UNIT SUBSTATION 23 ELEVATIONS 12.46KV STRUCTURE	FAC-AA-4473-E11	
E12	UNIT SUBSTATION 23 ELEVATIONS 12.46KV STRUCTURE	FAC-AA-4473-E12	
E13	UNIT SUBSTATION 23 DUCT BANK PLAN AND DETAILS	FAC-AA-4473-E13	
E14	UNIT SUBSTATION 23 DUCT BANK ELEVATION AND FENCE GROUNDING	FAC-AA-4473-E14	
E15	UNIT SUBSTATION 23 POLE DETAILS	FAC-AA-4473-E15	
E16	DUCT BANK CONFIGURATION	FAC-AA-4473-E16	
E17	CONDUIT SCHEDULE	FAC-AA-4473-E17	
	UCS		
UCS1	UCS NOTES AND BLDG 4473 FLOOR PLAN	FAC-AA-4473-UCS1	
UCS2	BLDG 4443 FLOOR PLAN	FAC-AA-4473-UCS2	
UCS3	UCS DEMO WIRING DETAILS AND DEMO COMM TRUNK LAYOUT	FAC-AA-4473-UCS3	
UCS4	UCS NEW COMM TRUNK LAYOUT WITH FIBER OPTIC DETAILS	FAC-AA-4473-UCS4	

ADDITIVE ALTERNATE

REPLACE THE EXISTING FEEDER CONDUCTORS FROM TRANSFORMER T5 AND T6 SEE SHEET E4.

ATTENTION!

ALL CONTRACTORS AND SUBCONTRACTORS PREPARING BIDS FOR THIS PROJECT

USING A 'COMPARABLE, EQUAL' OR 'SUBSTITUTION' PRODUCT, IN THE PLACE OF A 'BASIS OF DESIGN' PRODUCT, MAY REQUIRE CHANGES TO THE MECHANICAL, ELECTRICAL, STRUCTURAL OR ARCHITECTURAL BUILDING SYSTEMS IN ORDER TO ACCOMODATE THE PRODUCT. THE CONTRACTOR IS RESPONSIBLE FOR ALL COSTS OF MAKING CHANGES TO THE BUILDING SYSTEMS. SUBMIT IN ACCORDANCE WITH SPEC SECTION 01 60 00 PRODUCT REQUIREMENT.

WARNING

DO NOT SCALE THIS DRAWING

THIS DRAWING WAS DESIGNED TO BE PRINTED AT A NASA SHEET SIZE: MSFC STD. SIZE 40" X 28"

PRELIMINARY CADD DWG.

CHANGES TO THIS DRAWING SHALL BE MADE ON CADD ONLY.

3462737 07-23-14 JF

LATEST CADD UPDATE: 01-16-14 BY: DEY 03:30 PM

SIGNATURES ON THIS SHEET INDICATE ACCEPTANCE OF ALL DRAWINGS LISTED IN THE INDEX OF DRAWINGS.

CONCURRENCE: DATE:

USING OFFICE
CONCURRENCE: DATE:

ENVIRONMENTAL ENGINEERING OFFICE
CONCURRENCE: DATE:

OPERATIONS & MAINTENANCE OFFICE
CONCURRENCE: DATE:

OCCUPATIONAL HEALTH OFFICE
CONCURRENCE: DATE:

SAFETY OFFICE
CONCURRENCE: DATE:

COMMUNICATIONS OFFICE
TELECOMMUNICATIONS EQUIPMENT AFFECTED BY THIS CONTRACT WORK IS NOT TO BE ALTERED OR REMOVED BY THE CONTRACTOR. CONTACT THE COR IN THE EVENT OF A CONFLICT
CONCURRENCE: DATE:

FACILITIES ENGINEERING OFFICE

REV.	BY	DATE	REVISION	C.I. NO.	APPROVED

Marshall Space Flight Center
Huntsville, Alabama 35812

BUILDING 4473
REVITALIZE CENTRAL CHILLER WATER FACILITY - ELECTRICAL
INDEX DRAWING AND SITE PLAN

AE FIRM: KAYA Associates, Inc.

NASA AE CONTRACT NO. NAS8-NNM11AA39C

SUBMITTED: JUERGEN HAUKOHL
AE: DATE:
APPROVAL RECOMMENDED: AS22 PROJ. A/E DATE:
APPROVED: AS22 GROUP LEAD DATE:

DESIGNED: M. DEY
DRAWN: J. FLETCHER
CHECKED: S. WASILEFSKY
SCALE: AS NOTED
APPROVAL RECOMMENDED: AS22 TEAM LEAD DATE:
SPEC. NO. FAC M5061

DRAWING NO. FAC-AA-4473-X1

REF. NO. X1 OF 1

SHEET 1 OF 28

MSFC-FORM 232 REV. 8-21-89-RCL

N:*DesignProjects*4473*AA-3462737*x1.dgn

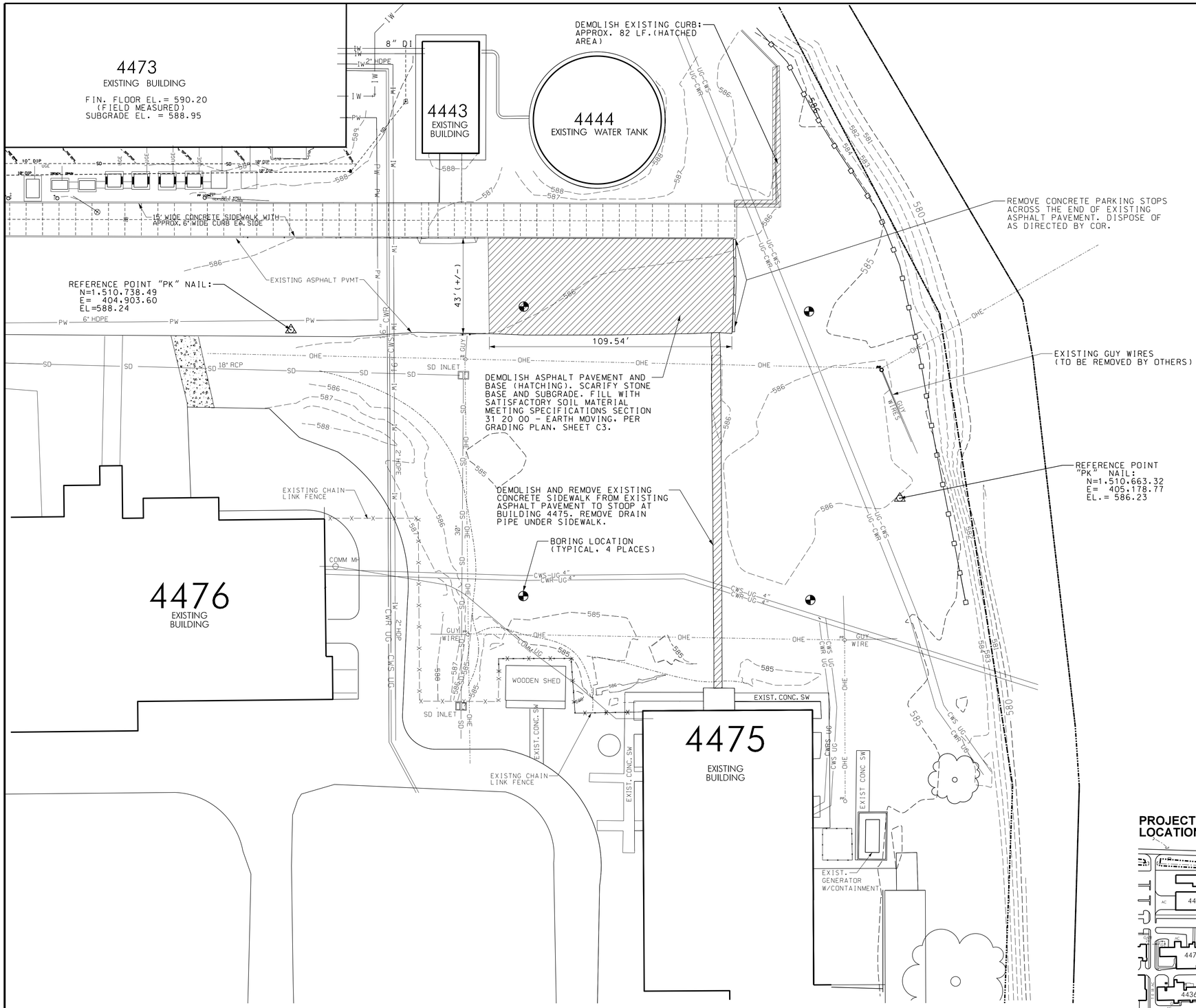

BUILDING 4473
EXISTING CONDITIONS AND SITE DEMOLITION
SCALE: 1" = 20'

0 10' 20' 40'

SITE NOTES:

1. VERIFY ALL DIMENSIONS AND CONDITIONS AT THE SITE PRIOR TO CONSTRUCTION. WHERE DISCREPANCIES EXIST, CONFIRM COURSE OF ACTION WITH THE CONTRACTING OFFICER'S REPRESENTATIVE (COR) BEFORE PROCEEDING.
2. PRIOR TO BEGINNING CONSTRUCTION:
   (A) CONTACT NASA AS22 TO OBTAIN A DIG PERMIT. (OSCAR FORD @ (256) 544-6759 OR (256) 603-7884).
   (B) FIELD LOCATE EXISTING UTILITIES BEFORE CONSTRUCTION BEGINS, AND IDENTIFY CONFLICTS OF NEW CONSTRUCTION WITH EXISTING UTILITY LINES. (TAKE CARE TO PREVENT DAMAGE TO EXISTING UTILITIES).
   (C) EXCAVATE TO EXPOSE THE LOCATION OF UTILITY REQUIRING CONNECTION OR MODIFICATION WHEN LOCATION CANNOT BE DETERMINED BY OTHER MEANS.
3. WHEN EXISTING UTILITIES ARE ENCOUNTERED OR NEW UTILITIES INSTALLED, WHILE THE EXCAVATION REMAINS OPEN, THE CONTRACTOR SHALL NOTIFY THE COR, WHO WILL ARRANGE FOR THE HORIZONTAL AND VERTICAL LOCATIONS OF THE UTILITY TO BE RECORDED BY GPS. THE CONTRACTOR SHALL RECORD LOCATIONS OF ALL UTILITY LINES IDENTIFIED DURING WORK ACTIVITIES ON THE REDLINE DRAWINGS.
4. NO UNEXPLODED ORDNANCE (UXO) NOR CHEMICAL WARFARE MATERIAL (CWM) IS SUSPECTED IN THE PROPOSED WORK AREA. HOWEVER, IF MATERIALS SUSPECTED TO BE UXO OR CWM ARE ENCOUNTERED, PROCEED AS DIRECTED IN SPECIFICATIONS SECTION 01 05 90 - SPECIAL CONDITIONS, PARAGRAPH 1.4. A.
5. CLEAR AND GRUB THE CONSTRUCTION AREA ACCORDING TO SPECIFICATIONS SECTION 31 10 00, SITE CLEARING. STRIP AND DISPOSE OF EXISTING VEGETATION. STOCKPILE EXISTING TOPSOIL FOR REDISTRIBUTION ON DISTURBED AREAS ACCORDING TO THE GRADING PLAN AND THE ELEVATIONS SHOWN. TAKE PRECAUTIONS TO PROTECT AND PRESERVE ALL TREES UNDAMAGED.
6. EXCAVATE, FILL AND COMPACT TO SUBGRADE ELEVATIONS AS INDICATED IN DRAWINGS, NOTES AND SPECIFICATIONS, SECTION 31 20 00 - EARTH MOVING. CUT AND FILL SLOPES SHALL NOT EXCEED 1 VERTICAL:3 HORIZONTAL.
7. MAINTAIN EXISTING DRAINAGE PATTERN EXCEPT AS REVISED BY GRADING PLAN.
8. AT THE COMPLETION OF CONSTRUCTION, RAKE SMOOTH ALL DISTURBED OR FILLED AREAS, REMOVING ALL STONES LARGER THAN 3/4" NOMINAL DIAMETER. FINE GRADE WITH AVAILABLE TOPSOIL AND PROVIDE ADDITIONAL TOPSOIL AS NEEDED FOR 4" THICKNESS. THEN SEED WITH SEASON APPROPRIATE GRASS PER SPECIFICATIONS SECTION 32 92 00 - TURF AND GRASSES.
9. PLACE SILT FENCE, OR OTHER APPROVED METHOD, AS NEEDED TO PREVENT EROSION FROM LEAVING THE SITE FROM EXCAVATIONS OR STOCKPILES. MAINTAIN THROUGHOUT PROJECT. WADDLES MEETING ALDOT SPECIFICATIONS (2012 ED.) MAY BE USED IN LIEU OF SILT FENCE.

WARNING

DO NOT SCALE THIS DRAWING

THIS DRAWING WAS DESIGNED TO BE PRINTED AT A NASA SHEET SIZE: MSFC STD. SIZE 40" X 28"

PRELIMINARY CADD DWG.

CHANGES TO THIS DRAWING SHALL BE MADE ON CADD ONLY.
3462737 08-27-14 THL
LATEST CADD UPDATE: 12-15-14 11:30 AM
BY: T.LEWIS

PROJECT LOCATION

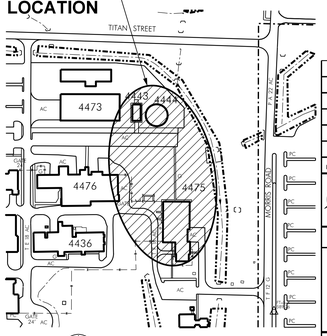

KEY PLAN
NOT TO SCALE

REV.	BY	DATE	REVISION	C.I. NO.	APPROVED

Marshall Space Flight Center
Huntsville, Alabama 35812

WORK REQUEST NO. 3462737

BUILDING 4473
REVITALIZE CENTRAL CHILLER WATER FACILITY-ELECTRICAL

UNIT SUBSTATION 23 - EXISTING CONDITIONS, DEMOLITION, & NOTES

AE FIRM: KAYA Associates, Inc.
NASA AE CONTRACT NO. NNM11AA39C

SUBMITTED: JUERGEN HAUKOHL
APPROVAL RECOMMENDED:
APPROVED:

AE: DATE:
AS22 PROJ. A/E DATE:
AS22 GROUP LEAD DATE:

DESIGNED: T. LEWIS
DRAWN: T. LEWIS
CHECKED: C. CAMEALY
SCALE: AS NOTED

APPROVAL RECOMMENDED: KAYA Associates, Inc.
AS22 TEAM LEAD DATE:
SPEC. NO. FAC M5061

DRAWING NO. FAC-AA-4473-C1
SHEET 2 OF 28

SIGNATURES ON INDEX SHEET INDICATE ACCEPTANCE OF THIS SHEET

REF. NO. C1 OF 5

MSFC-FORM 232 REV. 8-21-89-RCL

N:\DesignProjects\4473\AA-3462737\c1.dgn

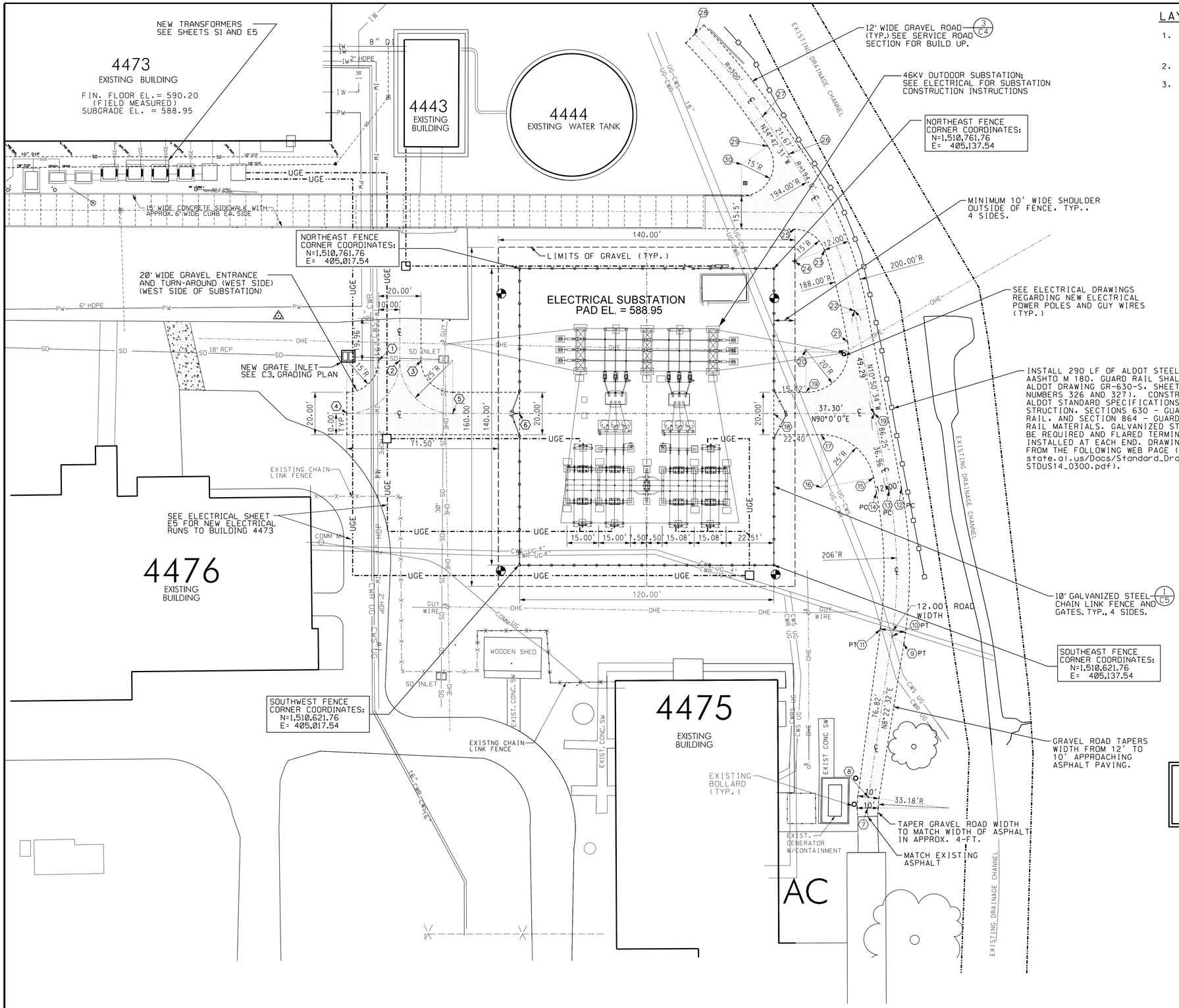

LAYOUT NOTES:

1. CONTRACTOR SHALL LOCATE REFERENCE POINTS AND ESTABLISH COORDINATES FOR SUBSTATION PAD AND GRAVEL ROAD. ADDRESS QUESTIONS TO RODNEY WILLIS, OFFICE PHONE: 256-544-2608, OR CELL PHONE: 256-665-5529.
2. CONTRACTOR SHALL ADJUST THE WIDTH OF THE GRAVEL ROAD AS SHOWN.
3. MAINTAIN POSITIVE DRAINAGE ACROSS NEW GRAVEL ROAD TOWARD DRAINAGE DITCH.

ROAD & REFERENCE COORDINATES

PT. NO.	NORTHING	EASTING
1	1,510,718.33	404,951.04
2	1,510,718.33	404,961.04
3	1,510,718.33	404,971.04
4	1,510,693.33	404,936.04
5	1,510,693.33	404,986.04
6	1,510,693.33	405,017.54
7	1,510,507.21	405,181.80
8	1,510,512.28	405,182.14
9	1,510,584.63	405,198.84
10	1,510,588.29	405,193.33
11	1,510,591.69	405,187.75
12	1,510,658.17	405,197.74
13	1,510,657.04	405,191.85
14	1,510,655.92	405,185.96
15	1,510,663.03	405,184.59
16	1,510,658.33	405,159.95
17	1,510,683.33	405,159.95
18	1,510,693.33	405,137.54
19	1,510,703.33	405,152.68
20	1,510,723.33	405,152.66
21	1,510,727.10	405,172.32
22	1,510,741.75	405,175.62
23	1,510,770.45	405,161.42
24	1,510,765.25	405,147.35
25	1,510,780.24	405,147.46
26	1,510,815.72	405,144.57
27	1,510,833.53	405,132.23
28	1,510,872.33	405100.23
29	1,510,819.44	405,134.69
30	1,510,810.90	405,122.36

LEGEND

EXISTING		NEW
6.00' PW	POTABLE WATER LINE	IW
IW	INDUSTRIAL WATER LINE	PW
12" RCP SD	STORM DRAIN (12" DIA.) REINFORCED CONCRETE	SD
645	MAJOR CONTOUR (5' INTERVAL)	645
644	CONTOUR WITH ELEVATION	644
	BUILDING FOOTPRINT	
	CONCRETE PADS AND SIDEWALKS	
CWS-UG CWR UG	CHILLED WATER SUPPLY AND RETURN	CWS-UG CWR UG
COMM	COMMUNICATIONS DUCT (UNDERGROUND)	COMM
UGE	UNDERGROUND ELECTRIC LINE	UGE
OHE	OVER HEAD ELECTRIC LINE	OHE
SS 6" VC	SANITARY SEWER LINE, 6" VITRIFIED CLAY PIPE	SS
	EDGE OF PAVEMENT (EOP)	
HPGAS	HIGH PRESSURE GAS (3500 PSIG)	HPGAS
	BORING LOCATION	

NOTE: SOME UTILITIES LINES SHOWN IN LEGEND ARE NOT REQUIRED ON THE DRAWINGS.

WARNING

DO NOT SCALE THIS DRAWING

THIS DRAWING WAS DESIGNED TO BE PRINTED AT A NASA SHEET SIZE: MSFC STD. SIZE 40" X 28"

PRELIMINARY CADD DWG.

CHANGES TO THIS DRAWING SHALL BE MADE ON CADD ONLY.

3462737 08-27-14 THL

LATEST CADD UPDATE: 12-15-14 BY: T.LEWIS 1:00 PM

REV.	BY	DATE	REVISION	C.I. NO.	APPROVED

Marshall Space Flight Center
Huntsville, Alabama 35812

WORK REQUEST NO. 3462737

BUILDING 4473
REVITALIZE CENTRAL CHILLER WATER FACILITY-ELECTRICAL
ELECTRICAL SUBSTATION LAYOUT PLAN

AE FIRM: KAYA Associates, Inc.

NASA AE CONTRACT NO. NNM11AA39C

SUBMITTED: JUERGEN HAUKOHL

APPROVAL RECOMMENDED:

APPROVED:

AE: DATE:

AS22 PROJ. A/E DATE:

AS22 GROUP LEAD DATE:

DESIGNED: T. LEWIS
DRAWN: T. LEWIS
CHECKED: C. CAMEALY

APPROVAL RECOMMENDED: KAYA Associates, Inc.

AS22 TEAM LEAD DATE:

SCALE: AS NOTED

SPEC. NO. FAC M5061

SIGNATURES ON INDEX SHEET INDICATE ACCEPTANCE OF THIS SHEET

REF. NO. C2 OF 5

DRAWING NO. FAC-AA-4473-C2

SHEET 3 OF 28

BUILDING 4473
ELECTRICAL SUBSTATION LAYOUT PLAN
SCALE: 1" = 20'
0 10' 20' 40'

MSFC-FORM 232 REV. 8-21-89-RCL

N:\DesignProjects\4473\AA-3462737\c2.dgn

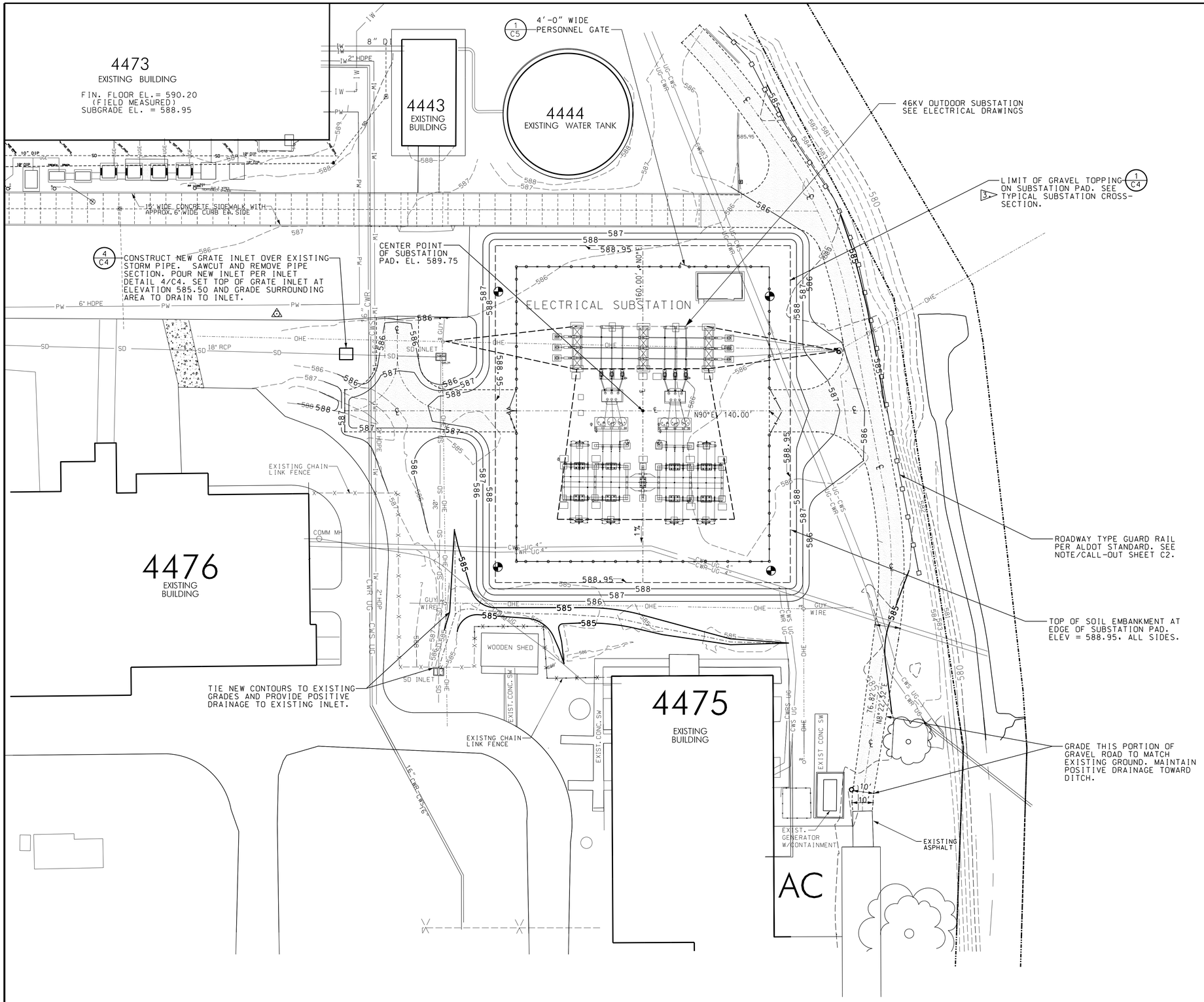

GRADING NOTES:

1. CLEAR AND GRUB THE CONSTRUCTION AREA.
2. COMPACT EXISTING SUBGRADE PRIOR TO FILLING.
3. SEE CONSTRUCTION NOTES FOR SUBSTATION PAD ON SHEET C4 FOR GRAVEL TOPPING ON SUBSTATION PAD.
4. SEE TYPICAL CROSS SECTION THROUGH SUBSTATION AND BUILDUP. INCLUDING GRAVEL COVER OR CAP ON SHEET C4.
5. INSTALL EROSION CONTROL CBMPP TO COMPLY WITH STORMWATER PERMIT.
6. DISTRIBUTE 4" (MIN.) TOPSOIL ON ALL DISTURBED SOIL AREAS. SEE NOTES FOR SUBSTATION PAD FOR SOIL PREPARATION AND VEGETATION.

WARNING

DO NOT SCALE THIS DRAWING

THIS DRAWING WAS DESIGNED TO BE PRINTED AT A NASA SHEET SIZE: MSFC STD. SIZE 40" X 28"

PRELIMINARY CADD DWG.

CHANGES TO THIS DRAWING SHALL BE MADE ON CADD ONLY.

3462737 08-27-14 THL — LATEST CADD UPDATE: 12-15-14 12:30 PM BY: T.LEWIS

REV.	BY	DATE	REVISION	C.I. NO.	APPROVED

Marshall Space Flight Center
Huntsville, Alabama 35812

WORK REQUEST NO. 3462737

BUILDING 4473
REVITALIZE CENTRAL CHILLER WATER FACILITY-ELECTRICAL
ELECTRICAL SUBSTATION GRADING PLAN

AE FIRM: KAYA Associates, Inc.

NASA AE CONTRACT NO. NNM11AA39C

SUBMITTED: JUERGEN HAUKOHL
APPROVAL RECOMMENDED:
APPROVED:
AE: DATE: AS22 PROJ. A/E DATE: AS22 GROUP LEAD DATE:
DESIGNED: T. LEWIS
DRAWN: T. LEWIS
CHECKED: C. CAMEALY
SCALE: AS NOTED
APPROVAL RECOMMENDED: KAYA Associates, Inc.
AS22 TEAM LEAD DATE:
SPEC. NO. FAC M5061

SIGNATURES ON INDEX SHEET INDICATE ACCEPTANCE OF THIS SHEET

REF. NO. C3 OF 5

DRAWING NO. FAC-AA-4473-C3

SHEET 4 OF 28

BUILDING 4473
ELECTRICAL SUBSTATION GRADING PLAN
SCALE: 1" = 20'
0 10' 20' 40'

MSFC-FORM 232 REV. 8-21-89-RCL

N:\DesignProjects\4473\AA-3462737\c3.dgn

CONSTRUCTION NOTES FOR SUBSTATION PAD: <A>

1. FURNISH AND INSTALL MIRAFI GEOTEXTILE OR EQUAL PRIOR TO INSTALLING THE CRUSHED STONE COVER. THERE SHALL BE NO VEGETATION WITHIN THE AREA TO BE COVERED BY GEOTEXTILE AND THEN STONE.

2. A 5" GRAVEL AND CRUSHED STONE INSULATION LAYER SHALL BE PLACED THROUGHOUT THE SUBSTATION YARD. FURNISH AND INSTALL CRUSHED ROCK TO THE FOLLOWING SPECIFICATIONS:

   (A) INSTALL A BASE OF 2" OF CRUSHER RUN AND A TOP WITH 3" OF #89 CRUSHED GRANITE OVER THE ENTIRE PAD AREA.

   (B) THE CRUSHED ROCK SHALL BE TAMPED OR ROLLED TO PROVIDE A UNIFORM AND COMPACT SURFACE.

   (C) MATERIAL SHALL GRADE SUCH THAT THE WET RESISTIVITY EXCEEDS 3000 OHM-METER. THIS REQUIREMENT APPLIES ONLY TO MATERIAL UP TO 1.0-FT BEYOND GROUND GRID CONDUCTOR LAYOUT (SEE ELECTRICAL DRAWINGS).

3. ALL EMBANKMENT SOIL SHALL BE COMPACTED TO 100% MODIFIED PROCTOR PER ASTM D 1557 SPECIFICATION. IT SHALL MEET SPECIFICATION REQUIREMENTS FOR SATISFACTORY SOIL AND SHALL BE PLACED IN 6" COMPACTED LAYERS.

4. TOPSOIL SHALL BE SPREAD 4" THICK OVER DISTURBED AREAS BEYOND THE STONE COVERED SUBSTATION PAD. TOPSOIL SHALL BE TESTED AND FERTILIZER SHALL BE APPLIED AS MEETS NEEDS OF THE SOIL FOR HEALTHY VEGETATION. SPREAD SEASON APPROPRIATE GRASS SEED, WATER AS NEEDED AND COVER WITH STRAW.

5. SEE SPECIFICATION 26 11 13 FOR STATION STRUCTURES AND FOUNDATION REQUIREMENTS.

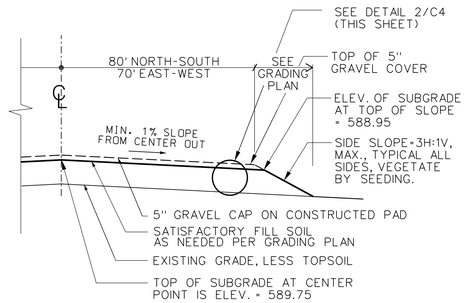

1/C4 TYPICAL CROSS-SECTION THROUGH SUBSTATION PAD <A>

NOT TO SCALE

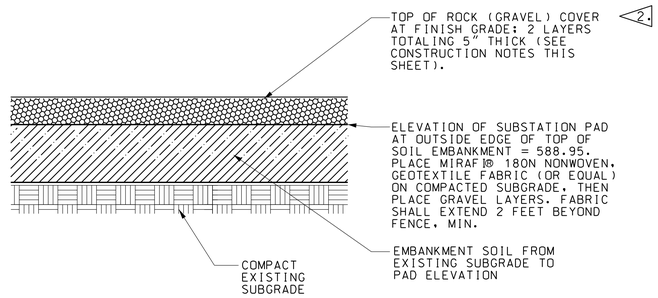

2/C4 TYPICAL SECTION OF SUBSTATION PAD <A>

NOT TO SCALE

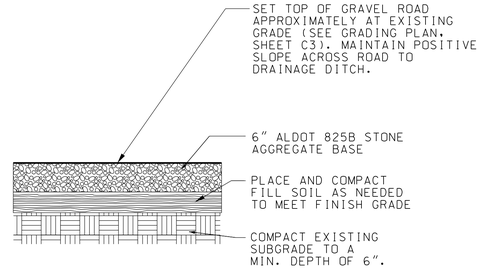

3/C4 SERVICE ROAD SECTION

NOT TO SCALE

NOTE: CONSTRUCT NEW GRATE INLET OVER EXISTING STORM DRAIN. SAWCUT AND REMOVE PIPE SECTION. POUR NEW INLET AS SHOWN.

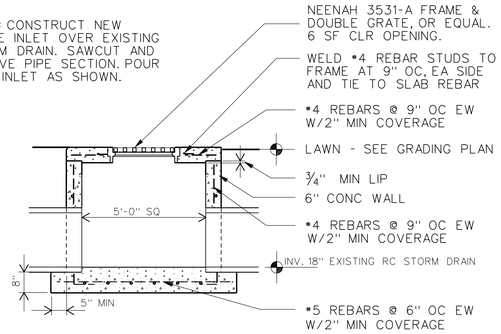

NOTE: CONC. SHALL BE 4000 PSI@ 28 DAYS

4/C4 GRATE INLET

NOT TO SCALE

WARNING

DO NOT SCALE THIS DRAWING

THIS DRAWING WAS DESIGNED TO BE PRINTED AT A NASA SHEET SIZE: MSFC STD. SIZE 40' X 28'

PRELIMINARY CADD DWG.

CHANGES TO THIS DRAWING SHALL BE MADE ON CADD ONLY.

3462737 08-27-14 LATEST CADD UPDATE: 12-15-14 BY: T. LEWIS 12:30 PM

REV.	BY	DATE	REVISION	C.I. NO.	APPROVED

Marshall Space Flight Center
Huntsville, Alabama 35812

WORK REQUEST NO. 3462737

BUILDING 4473

REVITALIZE CENTRAL CHILLER WATER FACILITY-ELECTRICAL

SITE DETAILS

AE FIRM: KAYA Associates, Inc.

NASA AE CONTRACT NO: NNM11AA39C

SUBMITTED: JUERGEN HAUKOHL

APPROVAL RECOMMENDED:

APPROVED:

AE: DATE:

AS22 PROJ. A/E: DATE:

AS22 GROUP LEAD: DATE:

DESIGNED: T. LEWIS
DRAWN: T. LEWIS
CHECKED: C. CAMEALY

APPROVAL RECOMMENDED: KAYA Associates, Inc.

AS22 TEAM LEAD: DATE:

SCALE: AS NOTED

SPEC. NO. FAC: M5061

DRAWING NO. FAC-AA-4473-C4

SHEET 5 OF 28

SIGNATURES ON INDEX SHEET INDICATE ACCEPTANCE OF THIS SHEET

REF. NO. C4 OF 5

MSFC-FORM 232 REV. 8-21-89-RCL

N:\DesignProjects\4473\AA-3462737\c4.dgn

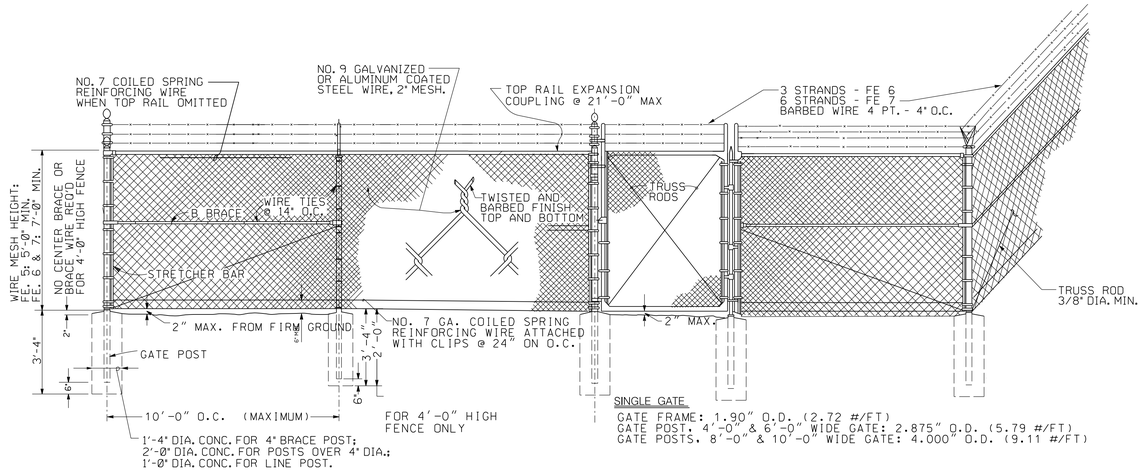

FENCE AND WALK GATE

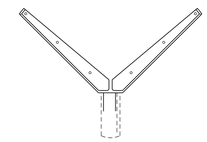

DOUBLE EXPANSION ARM

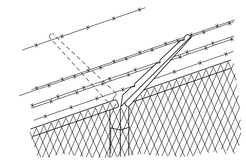

TOP FINISH OF FENCE

FOR SINGLE & DOUBLE EXTENSION ARMS PRESSED STEEL EXTENSION ARMS TOP 12 GA. BARBED WIRE 12" ABOVE FABRIC & 12" IN & OUT FROM FENCE.

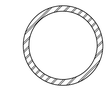

4.000" O.D. (3 1/2" NOM.) POST, 9.11 LBS PER FOOT - GATE
2.875" O.D. (2 1/2" NOM.) POST, 5.79 LBS PER FOOT - GATE, CORNER & PULL POSTS
1.660" O.D. (1 1/4" NOM.) TOP BRACE RAIL, 2.27 LBS PER FOOT
1.900" O.D. (1 1/2" NOM.) GATE FRAME, 2.72 LBS PER FOOT
2.375" O.D. (2" NOM.) LINE POST, 3.65 LBS PER FOOT

POST, BRACE & GATE FRAME

NTS

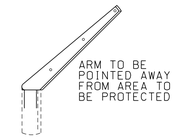

SINGLE EXTENSION ARM

FOR END & CORNER POST
12 GAGE PRESSED STEEL

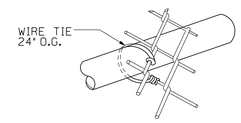

METHOD OF TYING FABRIC TO TOP AND BRACE RAIL

(TYPICAL)

GENERAL NOTES:

1. ALL FENCE FABRIC SHALL BE TIED SECURELY TO TOP RAIL. BRACE RAIL & POSTS ON INSIDE OF SECURED AREA WITH TWO OR MORE COMPLETE TWISTS OF WIRE, AS SHOWN.
2. ALL GATE HINGE PINS AND CLAMP BOLTS SHALL BE SECURELY SPOT WELDED.
3. FABRIC SHALL BE HELD TAUT AGAINST POSTS, RAILS, BRACES, ETC., BY TIES.
4. CHAIN LINK FENCING SHALL BE INSTALLED PER SPECIFICATION, SECTION 32 31 13, AND SHALL BE GALVANIZED STEEL, TYPE 1. IF A CONFLICT SHOULD EXIST BETWEEN THIS DRAWING AND THE SPECIFICATIONS, THE STRICTER OF THE TWO SHALL HOLD.
5. AN "FE 6" TYPE FENCE IS REQUIRED ON THIS PROJECT, THEREFORE, A SINGLE OUTWARD, BARBED WIRE OVERHANG IS REQUIRED FOR GATES AND FENCING ON THIS PROJECT. THE FENCE FABRIC (WIRE MESH) HEIGHT SHALL BE 10'-0".
6. TOP RAIL IS NOT REQUIRED FOR FENCING ON THIS PROJECT.
7. ALL PIPE SHALL BE ZINC GALVANIZED, SCHEDULE 40 STEEL PIPE.
8. FENCE GROUNDING: SEE SHEET E14.

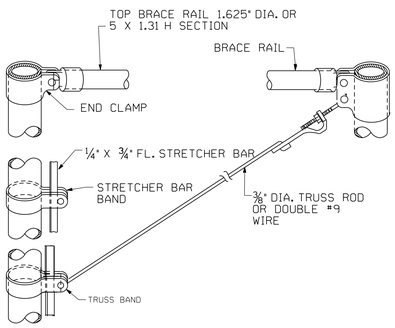

END & GATE POST CONNECTIONS

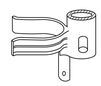

LATCH FORK

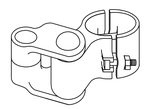

UPPER HINGE

LOCK KEEPER GUIDE

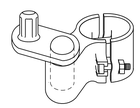

BOTTOM HINGE

SINGLE GATE DETAILS

FE 5 (NO BARBED WIRE OVERHANG)

BALL TOP FOR END GATE

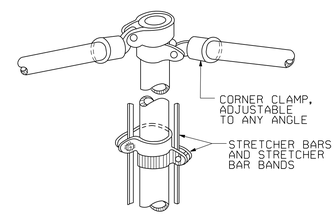

CORNER POST CONNECTIONS

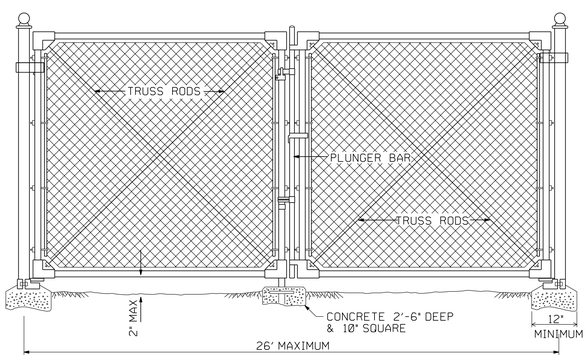

DOUBLE GATE

2'-8" TO 12" LEAVES AS INDICATED FOR ENTRANCE
1.900" O.D. (2.72 #/FT) GATE FRAME
4.000" O.D. (9.11 #/FT) GATE POST

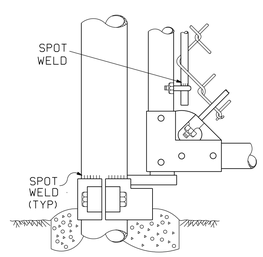

BOTTOM HINGE & CORNER ELL

FORK CATCH

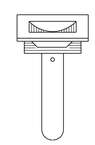

CATCH FOR PLUNGER BAR

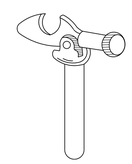

STOP TO HOLD GATE OPEN

LOCK KEEPER

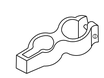

LOCK KEEPER GUIDE

LATCH FORK

DOUBLE GATE DETAILS

NTS

WARNING

DO NOT SCALE THIS DRAWING

THIS DRAWING WAS DESIGNED TO BE PRINTED AT A NASA SHEET SIZE: MSFC STD. SIZE 40" X 28"

PRELIMINARY CADD DWG.

CHANGES TO THIS DRAWING SHALL BE MADE ON CADD ONLY.
3462737 08-27-14
LATEST CADD UPDATE: 12-15-14 12:30 PM
BY: T. LEWIS

REV.	BY	DATE	REVISION	C.N. NO.	APPROVED

Marshall Space Flight Center
Huntsville, Alabama 35812

WORK REQUEST NO. 3462737

BUILDING 4473
REVITALIZE CENTRAL CHILLER WATER FACILITY-ELECTRICAL
CHAIN-LINK FENCE DETAILS

AE FIRM: KAYA Associates, Inc.
NASA AE CONTRACT NO. NNM11AA39C

SUBMITTED: JUERGEN HAUKOHL
AE: DATE:
APPROVAL RECOMMENDED: AS22 PROJ. A/E DATE:
APPROVED: AS22 GROUP LEAD DATE:

DESIGNED: T. LEWIS
DRAWN: T. LEWIS
CHECKED: C. CAMEALY
SCALE: AS NOTED
APPROVAL RECOMMENDED: KAYA Associates, Inc.
AS22 TEAM LEAD DATE:
SPEC. NO. FAC M5061

DRAWING NO. FAC-AA-4473-C5
SHEET 6 OF 28

SIGNATURES ON INDEX SHEET INDICATE ACCEPTANCE OF THIS SHEET

REF. NO. C5 OF 5

NOTE: THIS DRAWING CONTAINS STANDARD NOTES AND DETAILS FOR FENCING. ALL NOTES AND DETAILS MAY NOT BE APPLICABLE TO THE INSTALLATION OF THIS PROJECT.

1 / C5 CHAIN-LINK FENCE DETAILS
NOT TO SCALE

MSFC-FORM 232 REV. 8-21-89-RCL

N:\DesignProjects\4473\AA-3462737\c5.dgn

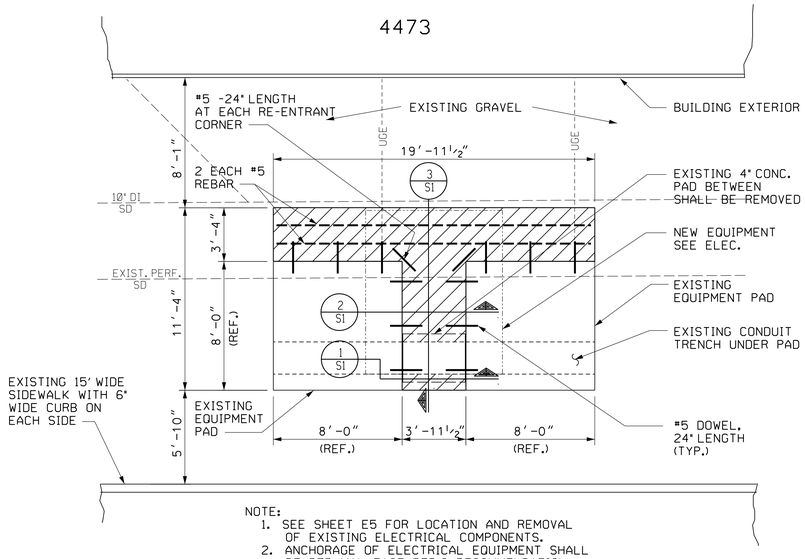

NOTE:
1. SEE SHEET E5 FOR LOCATION AND REMOVAL OF EXISTING ELECTRICAL COMPONENTS.
2. ANCHORAGE OF ELECTRICAL EQUIPMENT SHALL BE PER MANUFACTURER'S RECOMMENDATION.

CONCRETE SLAB EXTENSION PLAN

SCALE: 1/4" = 1'-0" 0 2' 4' 6'

LEGEND	
SYMBOL	DESCRIPTION
	NEW CONCRETE SLAB
	REMOVE CONCRETE SLAB
10" DI / SD	EXISTING UNDERGROUND STORM DRAIN
----UGE-------	EXISTING UNDERGROUND ELECTRICAL

STRUCTURAL PLAN NOTES

(DIVISION 1 - GENERAL REQUIREMENTS)

1.1 DETAILS AND SECTIONS SHOWN ON THE DRAWINGS ARE TYPICAL, AND SHALL APPLY TO SIMILAR SITUATIONS THROUGHOUT THE ENTIRE PROJECT, UNLESS NOTED OTHERWISE.

1.2 UTILITIES NOTICE OF INTERRUPTIONS: AT LEAST 21 CALENDAR DAYS IN ADVANCE OF THE ACTUAL NEED DATE, THE CONTRACTOR SHALL SUBMIT FOR APPROVAL A WRITTEN REQUEST TO THE CONTRACTING OFFICER FOR EACH INDIVIDUAL UTILITY OUTAGE. (EXCEPTIONS: INTERRUPTION TO HIGH-PRESSURE SYSTEMS REQUIRES A REQUEST TO THE COR BE MADE AT LEAST THIRTY DAYS PRIOR TO THE OUTAGE BEGINNING. ALSO, UTILITY OUTAGES FOR MISSION ESSENTIAL FACILITIES, I.E., BUILDINGS 4207, 4436, 4629, AND 4663, SHALL BE IDENTIFIED AND SCHEDULED THROUGH THE COR AT THE PRE-CONSTRUCTION MEETING.) THE REQUESTED INTERRUPTION START/STOP DATE(S) SHALL BE CLEARLY ESTABLISHED, AND ONCE APPROVED, DEVIATION FROM THE OUTAGE SCHEDULE SHALL NOT OCCUR, EXCEPT AS APPROVED BY THE COR.

1.3 FOR ADDITIONAL UTILITY INFORMATION, SEE REFERENCE DRAWING FAC-B-4473-C1.

(DIVISION 3 - CONCRETE)

3.1 ALL CAST-IN-PLACE CONCRETE WORK, EXCEPT FOR SLABS ON GRADE, SHALL CONFORM TO APPLICABLE SECTIONS OF ACI 301-10 (SPECIFICATIONS FOR STRUCTURAL CONCRETE), OF ACI 318-11 (BUILDING CODE REQUIREMENTS FOR STRUCTURAL CONCRETE), OF ACI 315-99 (DETAILS AND DETAILING OF CONCRETE REINFORCEMENT), AND TO CRSI MSP-1-02 (MANUAL OF STANDARD PRACTICE). CONCRETE SLAB CONSTRUCTION AND PLACING SHALL CONFORM TO THE APPLICABLE SECTIONS OF ACI 301-10 (SPECIFICATIONS FOR STRUCTURAL CONCRETE).

3.2 TESTING REQUIREMENTS SHALL BE AS CALLED FOR IN THE STANDARD SUBMITTALS FORM.

3.3 EXCEPT WHERE NOTED OTHERWISE, BEFORE BEGINNING ANY CONCRETE WORK, THE CONTRACTOR SHALL SUBMIT TO THE COR FOR PRIOR APPROVAL, ALL CONCRETE MIX DESIGN CALCULATIONS, AND SUPPORTING DOCUMENTS AND DATA.

3.4 UNLESS NOTED OTHERWISE, THE MINIMUM PERMITTED CONCRETE 28-DAY ULTIMATE STRENGTH FOR STRUCTURAL CONCRETE IS 4000 PSI. NO CONCRETE ADMIXTURES CONTAINING CHLORIDES WILL BE ALLOWED WITHOUT PRIOR APPROVAL BY THE COR.

3.5 CONCRETE REINFORCING BAR SHALL BE DEFORMED BAR CONFORMING TO ASTM A615-GR. 60.

3.6 UNLESS NOTED OTHERWISE, EXPOSED CORNERS AND EDGES OF ALL CONCRETE CONSTRUCTION SHALL HAVE A 3/4" CHAMFER.

3.7 PRIOR TO POURING SLABS ON GRADE, ENSURE THAT ALL UTILITIES UNDERNEATH THE SLAB, AS WELL AS ALL SLAB PENETRATIONS, ARE PROPERLY LOCATED AND SECURED AGAINST DISPLACEMENT. ALL UTILITY LINES BELOW SLABS SHALL BE MARKED WITH WARNING TAPE, PLACED WITHIN 6"-18" OF THE TOP OF THE SLAB; ALSO PLACE A SINGLE, CONTINUOUS, BARE, 12-AWG, SOLID-STRAND DETECTION WIRE, LAID DIRECTLY ON TOP OF THE TAPE.

3.8 SLAB SHALL ALSO HAVE A LIGHTLY-BROOMED FINISH, WITH THE BROOM STROKES ACROSS THE SLOPE, AND PARALLEL TO ADJACENT WALLS.

(DIVISION 31 - EARTHWORK)

31.1 SEE CIVIL.

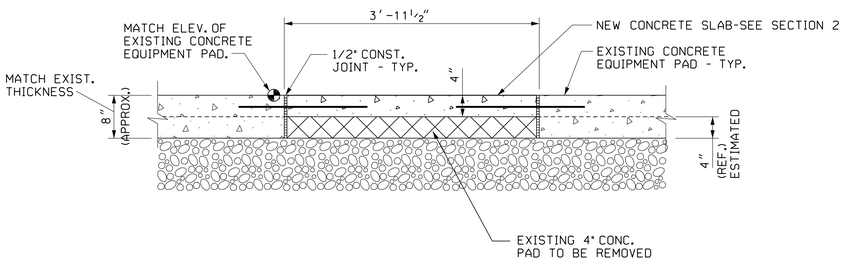

1 S1 SECTION
SCALE: 1" = 1'-0" 0 1' 2'

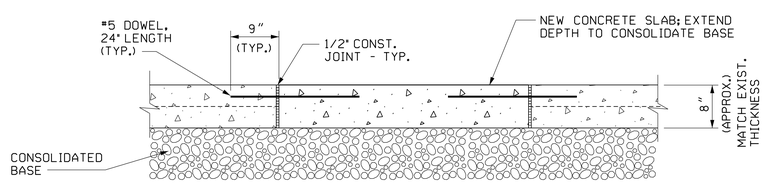

2 S1 SECTION
SCALE: 1" = 1'-0" 0 1' 2'

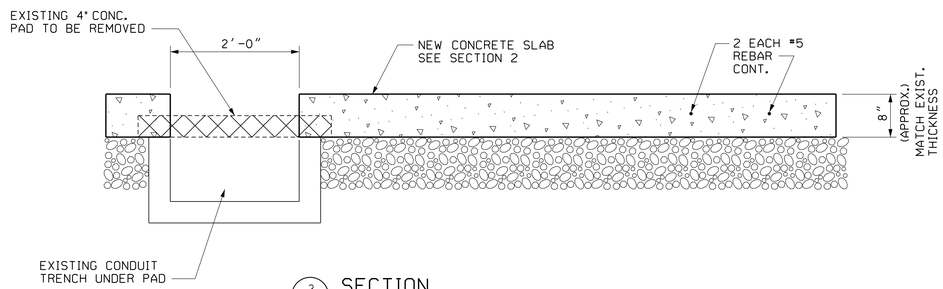

3 S1 SECTION
SCALE: 1" = 1'-0" 0 1' 2'

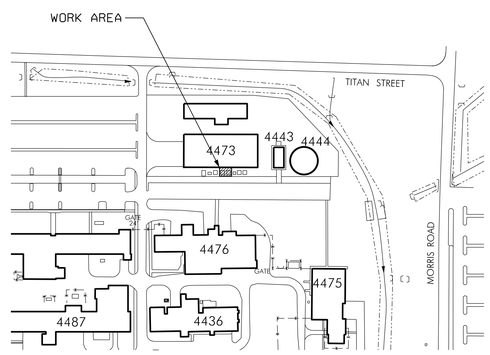

KEY PLAN - BLDG 4473
NOT TO SCALE

PRELIMINARY CADD DWG.
CHANGES TO THIS DRAWING SHALL BE MADE ON CADD ONLY.
11-07-14 BJJ — LATEST CADD UPDATE: BY: R. WHITE — 12-12-14 2:00 PM

REV.	BY	DATE	REVISION	C.I. NO.	APPROVED

Marshall Space Flight Center
Huntsville, Alabama 35812

WORK REQUEST NO. 3462737

BUILDING 4473
REVITALIZE CENTRAL CHILLED WATER FACILITY - ELECTRICAL
STRUCTURAL - DETAILS FOR TRANSFORMER PAD EXTENSION

AE FIRM: KAYA Associates, Inc.
NASA AE CONTRACT NO. NAS8- NNM11AA39C

SUBMITTED: JUERGEN HAUKOHL
APPROVAL RECOMMENDED: AS22 PROJECT A/E
APPROVED:
AE: DATE:
APPROVAL RECOMMENDED: AS22 SUPPORT A/E
AS22 GROUP LEAD DATE:
DESIGNED R. WHITE
DRAWN B. JANSEN
CHECKED C. CAMEALY
APPROVAL RECOMMENDED: KAYA Associates, Inc.
DRAWING NO. FAC-AA-4473-S1
SCALE: AS NOTED
SPEC. NO. FAC M5061
SHEET 7 OF 28

SIGNATURES ON INDEX SHEET INDICATE ACCEPTANCE OF THIS SHEET
REF. NO. S1 OF 1

MSFC-FORM 232 REV. 8-21-89-RCL

SYMBOL LIST

STEP VOLTAGE REGULATOR
INDICATES QUANTITY REQ'D (TYPICAL)

INDICATES QUANTITY REQ'D (TYPICAL)
SURGE ARRESTER

15Kv VACUUM OR 46kV Sf6 POWER CIRCUIT BREAKER

GANG OPERATED LOAD BREAK OR DISCONNECT SWITCH
D- DISCONNECT, OTHERWISE LOADBREAK

GANG OPERATED FAULT INTERRUPTER SWITCH

VACUUM SWITCH (15 KV)

FUSED POTENTIAL OR CONTROL POWER (CPT) TRANSFORMER

200/5 CURRENT TRANSFORMER (NUMERALS INDICATE AMP RATIO)

SINGLE POLE DISCONNECT SWITCH, 3 REQ'D OR AS SHOWN.

GROUND

MOTOR OPERATOR

DRAWOUT OR PLUG IN POWER CONNECTION

UNDERGROUND CABLE TERMINATION

TB PT OR CT TEST BLOCKS (REQUIRED FOR ALL INST. XFMRS.)

CS SWITCH OPERATOR: CS-CONTROL SWITCH; AS-AMMETER
SELECTOR SWITCH; VS-VOLTMETER SEL. SW.

50/51 (3) TIME OVERCURRENT RELAY WITH INSTANTANEOUS ELEMENT.
NUMBER (3) INDICATES QUANTITY OF DEVICES

50/51N OVERCURRENT RELAY CONNECTED IN RESIDUAL NEUTRAL CIRCUIT

79
79CO 3 SHOT RECLOSURE RELAY WITH INSTANTANEOUS LOCKOUT

87 DIFFERENTIAL RELAY

67 DIRECTIONAL TIME OVERCURRENT RELAY WITH DIR. INST. TRIP
CUR. OPR. TARGETS.

67N DIRECTIONAL TIME-OVERCURRENT & DIR. INST. GND. RELAY
IN RESIDUAL NEUTRAL CIRCUIT.

86T LOCK-OUT RELAY (TRANSFORMER PROTECTIVE DEVICE)

83 AUTOMATIC SOURCE TRANSFER RELAY FOR STATION SERVICE

KWD KILOWATT HOUR DEMAND (15 MIN DEMAND REGISTER)

63S 63X SUDDEN PRESSURE RELAY AND AUX.

49 49X TEMPERATURE RELAY AND AUX.

53 DASHED LINE CONNECTING RELAYING INDICATES
CONTROL ACTION PRECEDENCE PER ANSI STANDARDS

ABBREVIATIONS:

PT	POTENTIAL TRANSFORMER
CT	CURRENT TRANSFORMER
N/O	NORMALLY OPEN CONTACT OR SWITCH
N/C	NORMALLY CLOSED " " "

EXISTING
NEW

NEW, EXISTING OR FUTURE CONCRETE POLE, 46kV/15kV, 70' CLASS H2

OP46/15 NEW CIRCUIT.
SIZED EXCEPT AS SHOWN: [46kV: 3-795ACSR/AW (26/7), 1-3/8"EHS SHIELD
15kV: 4-397.5ACSR/AW (26/7)]

OP46 NEW CIRCUIT.
SIZED EXCEPT AS SHOWN: [46kV: 3-795ACSR/AW (26/7), 1-3/8"EHS SHIELD]

T PAD MOUNTED TRANSFORMER, RATING AND SIZE AS INDICATED

E POLE MOUNTED GANG OPERATED LOAD BREAK SWITCH

FUSED CUTOUTS, 100T FUSE UNLESS SHOWN OTHERWISE

12M E DOWNGUY AND ANCHOR. NUMBER INDICATES STRENGTH (1000'S LBS)
PROVIDE 12000 LB GUYS (12kv), 16000 (46kV) (MIN)

5-20R DUPLEX RECEPTACLE

ABBREVIATION LEGEND

A	AMPERE
AC	ALTERNATING CURRENT
ACSR	ALUMINUM CONDUCTOR STEEL REINFORCED
AM	AMMETER
AUTO	AUTOMATIC
AWG	AMERICAN WIRE GUAGE
BATT	BATTERY
CS	CONTROL SWITCH
CT	CURRENT TRANSFORMER
CURR	CURRENT
DIR	DIRECTIONAL
EHS	EXTRA HIGH STRENGTH
EX	EXISTING
FDR	FEEDER
GND	GROUND
HZ	HERTZ
INST	INSTANTENEOUS
KCM	KILLO CIRCULAR MILL
KV	KILLOVOLT
KWD	KILLO WATT DEMAND
LBS	POUND
MAX	MAXIMUM
MIN	MINIMUM
OPR	OPERATIONAL
PH	PHASE
PJ	PAD MOUNTED JUNCTION BOX
PST	PAD MOUNTED SOURCE TRANSFER
PT	POTENTIAL TRANSFORMER
REQ'D	REQUIRED
SEL	SCHWEITZER ENGINEERING LABORATORIES
SF6	SULFER HEXAFLORIDE
SHT	SHEET
SWBD	SWITCHBOARD
TB	TEST BLOCK
TYP	TYPICAL
V	VOLT
VM	VOLTMETER
W	WIRE
XFMR	TRANSFORMER

GENERAL NOTES

1. THE FOUNDATION DESIGNS FOR TRANSFORMERS, SWITCHES, LIGHT POLES, CONTROL HOUSE, ETC., INCLUDING THE SIZES AND LOCATIONS OF REBAR AND THE ANCHOR BOLTS SHALL BE SUPPLIED BY THE CONTRACTOR AND MUST MEET OR EXCEED THE MORE STRINGENT OF THE REQUIREMENTS GIVEN IN THE PROJECT SPECIFICATIONS AND THE REQUIREMENTS OF THE EQUIPMENT SUPPLIER. THE FOUNDATION DESIGN DRAWINGS SHALL BE SEALED BY A REGISTERED PROFESSIONAL ENGINEER AND THE CONTRACTOR SHALL SUBMIT THESE DRAWINGS AND SUPPORTING CALCULATIONS IN ACCORDANCE WITH PROJECT SPECIFICATION SECTION 01330 TITLED "SUBMITTAL PROCEDURES".

PRELIMINARY CADD DWG.
CHANGES TO THIS DRAWING SHALL BE MADE ON CADD ONLY.
3462737 09-11-13 LATEST CADD UPDATE: 09-22-14 8:00 AM
BY: FLETCHER

REV.	BY	DATE	REVISION	C.I. NO.	APPROVED

Marshall Space Flight Center
Huntsville, Alabama 35812

WORK REQUEST NO. 3462737

BUILDING 4473
REVITALIZE CENTRAL CHILLER WATER FACILITY-ELECTRICAL
UNIT SUBSTATION 23 GENERAL NOTES, SYMBOLS, AND ABBREVIATIONS

AE FIRM: KAYA Associates, Inc.
NASA AE CONTRACT NO. NAS8- NNM11AA39C

SUBMITTED: JUERGEN HAUKOHL
APPROVAL RECOMMENDED: AS22 PROJECT A/E
APPROVED:
AE: DATE:
APPROVAL RECOMMENDED: AS22 SUPPORT A/E
AS22 GROUP LEAD DATE:
DESIGNED M. DEY
DRAWN T. THOMAS
CHECKED S. WASILEFSKY
APPROVAL RECOMMENDED: KAYA Associates,Inc.
SCALE: AS NOTED
SPEC. NO. FAC M5061

DRAWING NO.
FAC-AA-4473-E1
SHEET 8 OF 28

SIGNATURES ON INDEX SHEET INDICATE ACCEPTANCE OF THIS SHEET
REF. NO. E1 OF 17

MSFC-FORM 232 REV. 8-21-89-RCL

N:*DesignProjects*4473*AA-3462737*e1.dgn

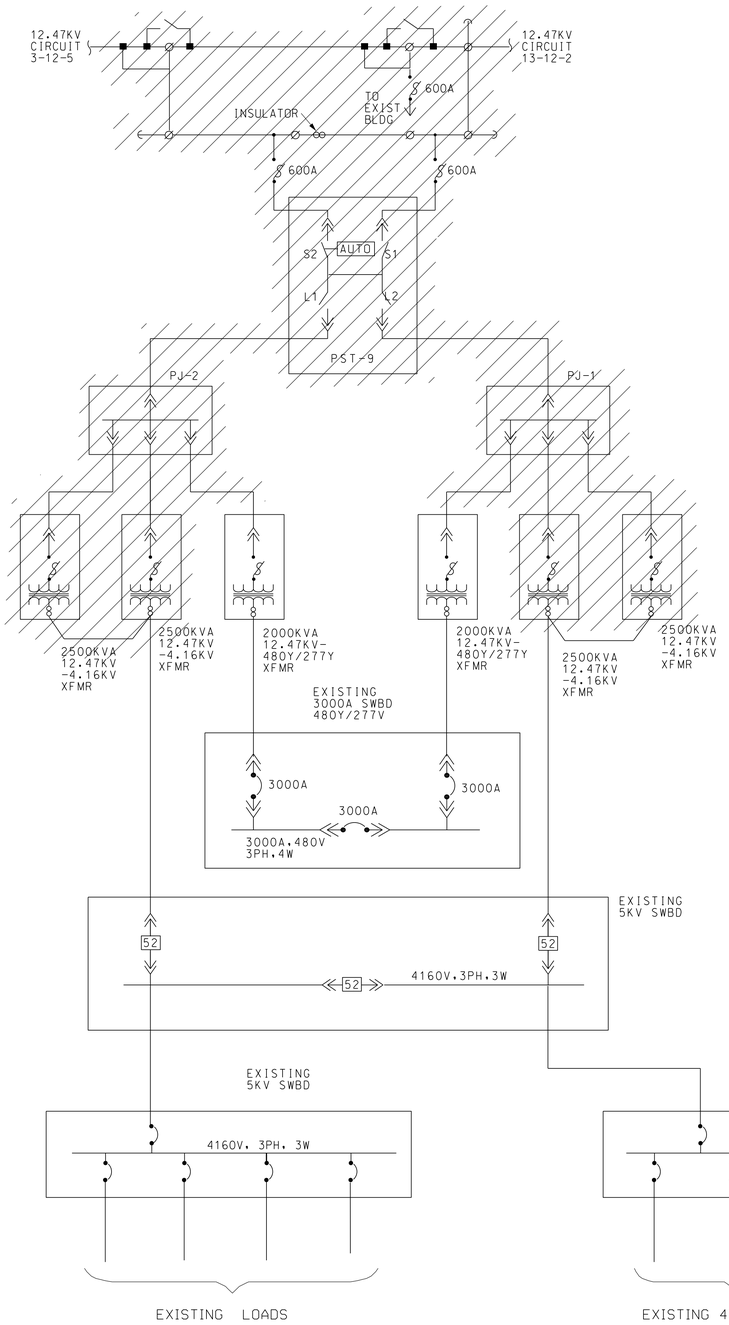

EXISTING ONE-LINE DIAGRAM

NOT TO SCALE

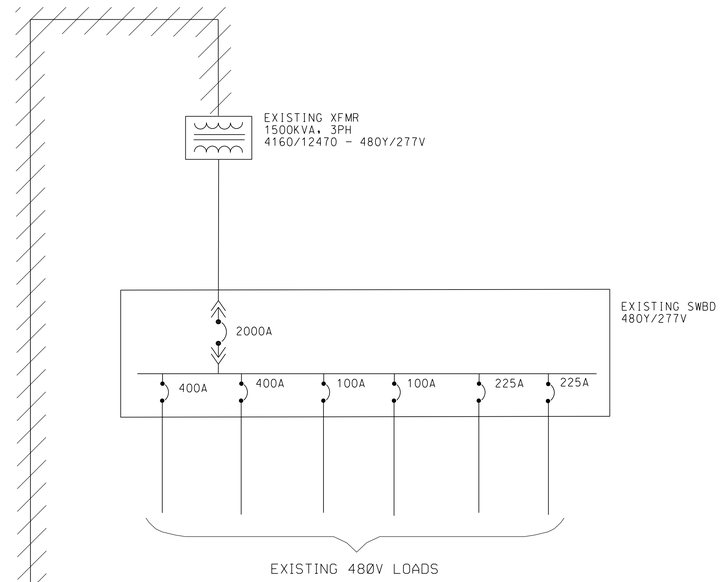

DRAWING NOTE

1. REMOVE ALL CONDUITS ASSOCIATED WITH ALL FEEDERS SCHEDULED TO BE REMOVED PER ONE-LINE DIAGRAM.
2. REMOVE THE EXISTING 12.47 KV OVERHEAD LINES, POLES AND ACCESSORIES ASSOCIATED WITH REMOVAL OF PST-9, PJ1 AND PJ2 UP TO THEIR 12.47 KV TAP-OFF POINT SOURCE.
3. THE NEW UNIT SUBSTATION 23 SHALL BE MADE FULLY OPERATIONAL BEFORE REMOVAL OF PST-9, PJ1 AND PJ2.

LEGEND

EXISTING TO REMAIN

EXISTING TO BE REMOVED

WARNING

DO NOT SCALE THIS DRAWING

THIS DRAWING WAS DESIGNED TO BE PRINTED AT A NASA SHEET SIZE: MSFC STD. SIZE 40" X 28"

PRELIMINARY CADD DWG.

CHANGES TO THIS DRAWING SHALL BE MADE ON CADD ONLY.

3462737 09-23-13 LATEST CADD UPDATE: 06-01-15 03:00 PM BY: DEY

REV.	BY	DATE	REVISION	C.I. NO.	APPROVED

Marshall Space Flight Center
Huntsville, Alabama 35812

WORK REQUEST NO. 3462737

BUILDING 4473
REVITALIZE CENTRAL CHILLED WATER FACILITY - ELECTRICAL
EXISTING ONE LINE DIAGRAM

AE FIRM: KAYA Associates, Inc.

NASA AE CONTRACT NO. NAS8- NNM11AA39C

SUBMITTED: JUERGEN HAUKOHL

APPROVAL RECOMMENDED: AS22 PROJECT A/E

APPROVED:

AE: DATE:

APPROVAL RECOMMENDED: AS22 SUPPORT A/E

AS22 GROUP LEAD DATE:

DESIGNED M. DEY
DRAWN J. FLETCHER
CHECKED S. WASILEFSKY

APPROVAL RECOMMENDED: KAYA Associates,Inc.

SCALE: AS NOTED

SPEC. NO. FAC M5061

DRAWING NO. FAC-AA-4473-E2

SHEET 9 OF 28

SIGNATURES ON INDEX SHEET INDICATE ACCEPTANCE OF THIS SHEET

REF. NO. E2 OF 17

MSFC-FORM 232 REV. 8-21-89-RCL

N:*DesignProjects*4473*AA-3462737*e2.dgn

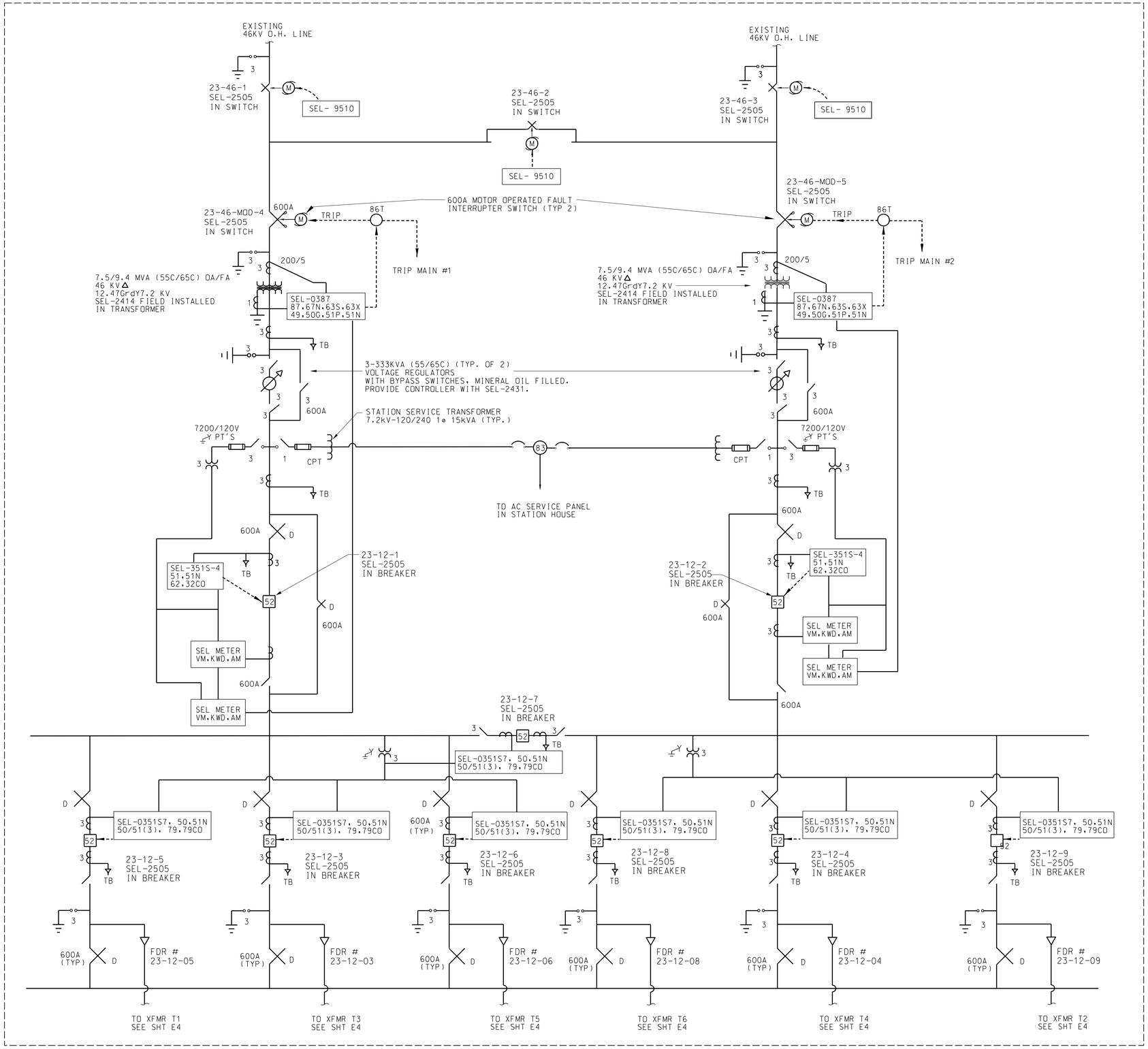

UNIT SUBSTATION 23 - ONE-LINE DIAGRAM

NOT TO SCALE

NOTES:

1. THE SEL-3351 COMMUNICATION PROCESSOR WILL BE CONNECTED TO A SEL-2725 ETHERNET SWITCH. THE ETHERNET RADIO WILL BE CONNECTED TO THE SEL-2725.
2. PROVIDE 1200 AMP RATINGS FOR ALL SWITCHES AND BREAKERS EXCEPT SHOWN OTHERWISE.
3. SEL-2414 RELAY TO BE INSTALLED IN EACH POWER TRANSFORMER CABINET AND WILL COMMUNICATE WITH THE RESPECTIVE COMMUNICATION PROCESSOR AND THE SEL-2100 LOGIC PROCESSOR.
4. CONTROL SIGNAL AND POWER SUPPLY CIRCUIT ARE NOT SHOWN. PROVIDE AND INSTALL ALL SUCH CIRCUIT AS REQUIRED TO ACHIEVE EQUIPMENT AND PROTECTIVE FUNCTIONS SPECIFIED WITH ACTUAL EQUIPMENT AND DEVICES TO BE SUPPLIED. ALL CIRCUITS ROUTED OUTSIDE OF STATION CONTROL HOUSE SHALL BE INSTALLED IN 2 INCH SCHED. 40 PVC RACEWAYS, WITH INSULATED GROUNDING CONDUCTORS BONDED TO GRID BURIED 24 INCHES (MIN) BELOW GRADE ENROUTE AND OTHERWISE INSTALLED PER SPECIFICATIONS. THE NEC AND NESC (ANSI C2).
5. ALL COMMUNICATIONS BETWEEN THE SEL CONTROLLERS IN THE CONTROL HOUSE AND THE EQUIPMENT IN THE YARD SHALL BE FIBER OPTIC.
6. MOUNT ALL RELAYING AND CONTROL (INCLUDING REMOTE ON/OFF SWITCHES AND INDICATING LIGHTS) FOR MOTORIZED SWITCHES AND CIRCUIT BREAKERS IN THE STATION CONTROL HOUSE SWITCHBOARD. PROVIDE CONTROL, MONITORING AND SIGNALING FUNCTIONS FOR SWITCHES AS SPECIFIED AND ROUTE WIRING TO SUPERVISORY CONTROL INTERFACE PANEL IN THE STATION CONTROL HOUSE (TYPICAL).
7. FURNISH AND INSTALL NEW CT'S ON THE REGULATOR STRUCTURE.
8. 46 KV SWITCHES ARE NOT BREAKERS. INSTALL SEL-351 IN CONTROL HOUSE AND USE TO TRIP AND CLOSE THE SWITCHES AND REPORT STATUS.
9. CT RATIOS SHALL BE AS FOLLOWS:

A.	HIGH SIDE TRANSFORMER:	200/5
B.	12KV MAIN:	800/5
C.	12KV FEEDERS	400/5
D.	12KV TIE	600/5

46KV
OUTDOOR
SUBSTATION

WARNING

DO NOT SCALE THIS DRAWING

THIS DRAWING WAS DESIGNED TO BE PRINTED AT A NASA SHEET SIZE: MSFC STD. SIZE 40" X 28"

PRELIMINARY CADD DWG.

CHANGES TO THIS DRAWING SHALL BE MADE ON CADD ONLY.

3462737 09-23-13 LATEST CADD UPDATE: 05-04-15 3:30 PM BY: FLETCHER

REV.	BY	DATE	REVISION	C.I. NO.	APPROVED

Marshall Space Flight Center
Huntsville, Alabama 35812

WORK REQUEST NO. 3462737

BUILDING 4473
REVITALIZE CENTRAL CHILLED WATER FACILITY - ELECTRICAL
UNIT SUBSTATION 23 - ONE LINE DIAGRAM

AE FIRM: KAYA Associates, Inc.

NASA AE CONTRACT NO. NASA- NNM11AA39C

SUBMITTED: JUERGEN HAUKOHL
APPROVAL RECOMMENDED: AS22 PROJECT A/E
APPROVED:
AE: DATE:
APPROVAL RECOMMENDED: AS22 SUPPORT A/E
AS22 GROUP LEAD DATE:
DESIGNED M. DEY
DRAWN J. FLETCHER
CHECKED S. WASILEFSKY
APPROVAL RECOMMENDED: KAYA Associates,Inc.
SCALE: AS NOTED
SPEC. NO. FAC M5061

SIGNATURES ON INDEX SHEET INDICATE ACCEPTANCE OF THIS SHEET

REF. NO. E3 OF 17

DRAWING NO. FAC-AA-4473-E3

SHEET 10 OF 28

MSFC-FORM 232 REV. 8-21-89-RCL

N:*DesignProjects*4473*AA-3462737*e3.dgn

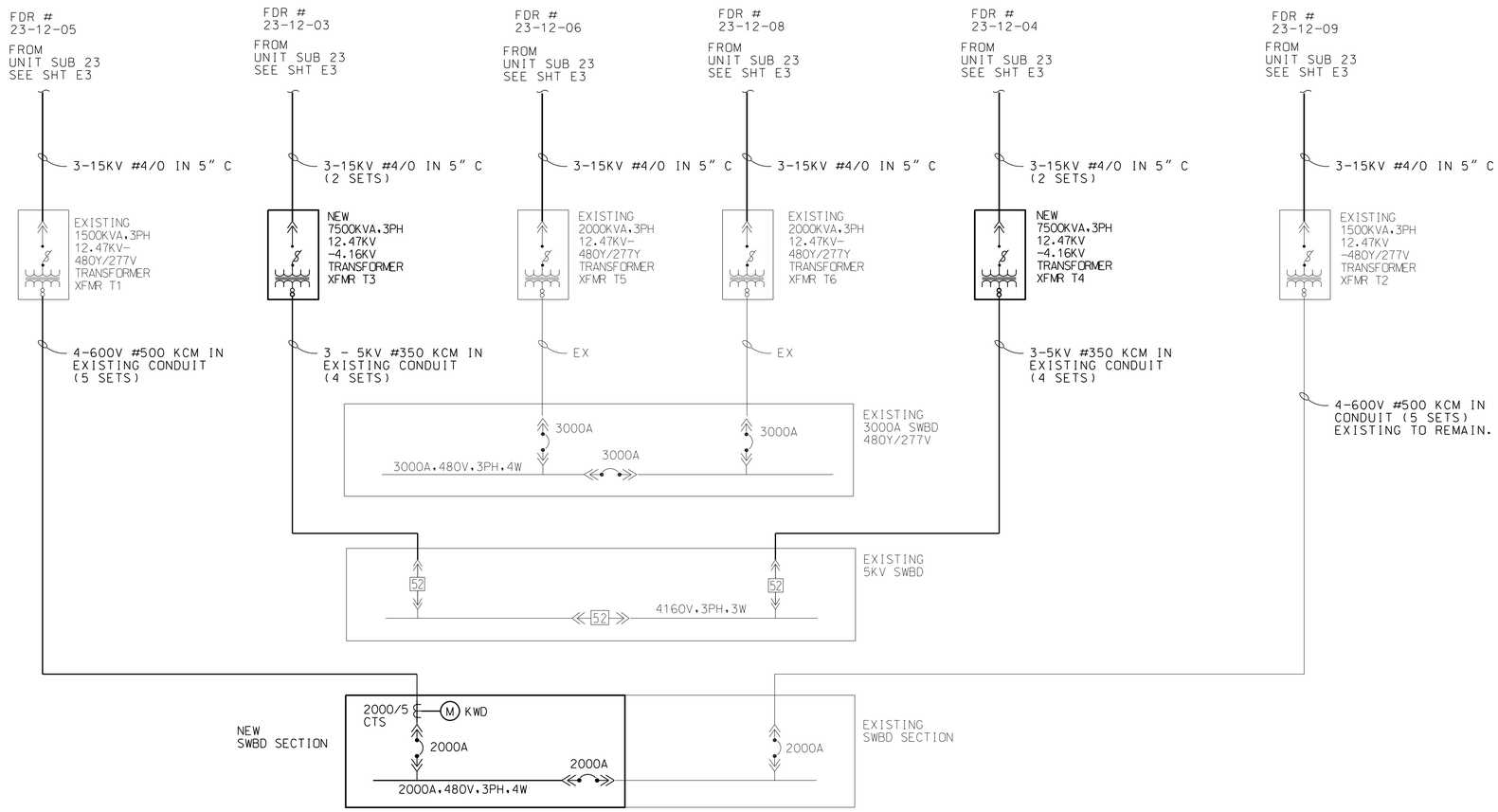

BUILDING 4473 : MAIN POWER SUPPLY ONE-LINE DIAGRAM

NOT TO SCALE

NOTE:

1. ALL MEDIUM VOLTAGE CABLES SHALL BE SINGLE CONDUCTOR TYPE AND SHALL CONSIST OF: CLASS B STRANDED COPPER CONDUCTORS, AN EXTRUDED SEMICONDUCTING SHIELD OVER THE CONDUCTORS, 220 MILS OF EPR INSULATION, AN EXTRUDED SEMICONDUCTING SHIELD, A STRANDED COPPER NEUTRAL WRAPPED HELICALLY AND A PVC JACKET.

ADDITIVE ALTERNATE

REPLACE THE EXISTING FEEDER CONDUCTORS FROM THE EXISTING TRANSFORMERS T5 AND T6 TO THE 3000A, 480Y/277V SWITCHBOARD USING THE SAME SIZE AS EXISTING FEEDER WIRES (4#750KCM IN 5" C, 6 SETS) USING THE EXISTING CONDUITS.

WARNING

DO NOT SCALE THIS DRAWING

THIS DRAWING WAS DESIGNED TO BE PRINTED AT A NASA SHEET SIZE: MSFC STD. SIZE 40" X 28"

PRELIMINARY CADD DWG.

CHANGES TO THIS DRAWING SHALL BE MADE ON CADD ONLY.

3462737 09-23-13 LATEST CADD UPDATE: 06-09-15 03:00 PM BY: FLETCHER

REV.	BY	DATE	REVISION	C.I. NO.	APPROVED

Marshall Space Flight Center
Huntsville, Alabama 35812

WORK REQUEST NO. 3462737

BUILDING 4473
REVITALIZE CENTRAL CHILLED WATER FACILITY - ELECTRICAL
MAIN POWER SUPPLY - ONE LINE DIAGRAM

AE FIRM: KAYA Associates, Inc.

NASA AE CONTRACT NO. NASS- NNM11AA39C

SUBMITTED: JUERGEN HAUKOHL
APPROVAL RECOMMENDED: AS22 PROJECT A/E
APPROVED:
AE: DATE:
APPROVAL RECOMMENDED: AS22 SUPPORT A/E
AS22 GROUP LEAD DATE:
DESIGNED M. DEY
DRAWN J. FLETCHER
CHECKED S. WASILEFSKY
APPROVAL RECOMMENDED: KAYA Associates,Inc.
SCALE: AS NOTED
SPEC. NO. FAC M5061

SIGNATURES ON INDEX SHEET INDICATE ACCEPTANCE OF THIS SHEET

REF. NO. E4 OF 17

DRAWING NO. FAC-AA-4473-E4

SHEET 11 OF 28

MSFC-FORM 232 REV. 8-21-89-RCL

N:*DesignProjects*4473*AA-3462737*e4.dgn

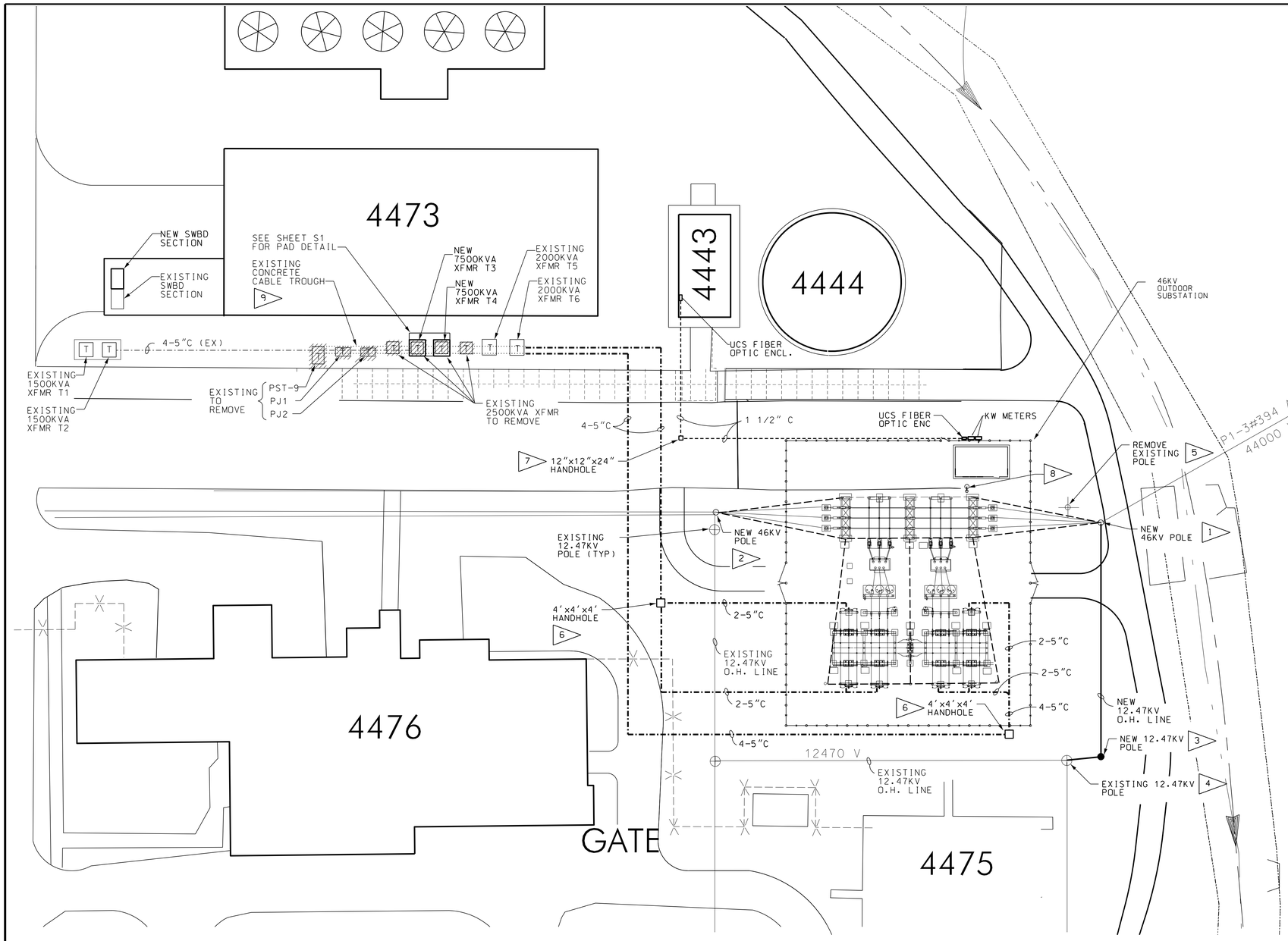

UNIT SUBSTATION 23 - SITE PLAN
SCALE: 1" = 30'-0"

DRAWING NOTES:

1. PROVIDE A NEW 46KV CONCRETE POLE. MAKE NECESSARY ADJUSTMENT OF THE EXISTING 46 KV AND 12.47 KV OVERHEAD LINES TO MATCH WITH THE LOCATION OF THE NEW POLE. PROVIDE 46 KV LINE CONNECTION TO SUB 3. REROUTE THE 12.47 KV LINE TO THE NEW POLE AS SHOWN. SEE SHEET E15. DETAIL A. PROVIDE NECESSARY HARDWARE AS REQUIRED.
2. PROVIDE A NEW 46KV CONCRETE POLE. MAKE NECESSARY ADJUSTMENT OF THE EXISTING 46KV OVERHEAD LINE FOR CONNECTING TO SUB 23. SEE SHEET E15. DETAIL B. PROVIDE NECESSARY HARDWARE AS REQUIRED.
3. PROVIDE A NEW 12.47KV CONCRETE POLE. REROUTE THE EXISTING 12.47KV OVERHEAD LINES AS SHOWN. PROVIDE NECESSARY HARDWARE AS REQUIRED. PROVIDE CONNECTION FROM THE NEW POLE TO THE EXISTING POLE USING 12.47KV LINE CONDUCTORS. SEE SHEET E15. DETAIL C.
4. PROVIDE CONNECTION FROM THE EXISTING 12.47 KV POLE TO THE NEW POLE AS SHOWN. SEE SHEET E15. DETAIL C. PROVIDE NECESSARY HARDWARE AS REQUIRED.
5. REMOVE THE EXISTING 46 KV POLE.
6. PROVIDE 4FT X 4FT X 4FT PRECAST HANDHOLE FOR 12.47KV UNDERGROUND CABLES
7. PROVIDE 12 INCH X 12 INCH X 24 INCH PRECAST HANDHOLE FOR UCS FIBER OPTIC CABLE. PROVIDE PROPERLY RATED BOX WITH COVER (PREFERABLY A STEEL DIAMOND PLATE COVER) SUITABLE FOR DRIVEWAY/PARKING LOT.
8. REMOVE THE EXISTING PARKING LOT LIGHT. THE POLE AND ALL ASSOCIATED WIRING UP TO ITS POWER SOURCE. EXISTING UNDERGROUND CONDUIT SHALL BE SEALED AT BOTH ENDS AND ABANDONED IN PLACE.
9. PROVIDE GALVANIZED COVER PLATES AT THE OPENINGS WHERE EQUIPMENT HAS BEEN REMOVED. SECURE WITH NECESSARY HARDWARE TO THE EXISTING CONCRETE TROUGH.

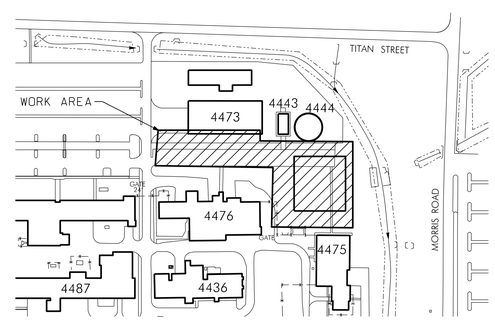

KEY PLAN - BLDG 4473
NOT TO SCALE

PRELIMINARY CADD DWG.
CHANGES TO THIS DRAWING SHALL BE MADE ON CADD ONLY.
3462737
09-11-13
LATEST CADD UPDATE: 12-15-14
BY: FLETCHER 7:45 AM

REV.	BY	DATE	REVISION	C.I. NO.	APPROVED

Marshall Space Flight Center
Huntsville, Alabama 35812

WORK REQUEST NO. 3462737

BUILDING 4473
REVITALIZE CENTRAL CHILLED WATER FACILITY - ELECTRICAL
UNIT SUBSTATION 23 - SITE PLAN

AE FIRM: KAYA Associates, Inc.
NASA AE CONTRACT NO. NAS8- NNM11AA39C

SUBMITTED: JUERGEN HAUKOHL
APPROVAL RECOMMENDED: AS22 PROJECT A/E
APPROVED:
AE: DATE:
APPROVAL RECOMMENDED: AS22 SUPPORT A/E
AS22 GROUP LEAD DATE:
DESIGNED M. DEY
DRAWN J. FLETCHER
CHECKED S. WASILEFSKY
APPROVAL RECOMMENDED: KAYA Associates,Inc.
SCALE: AS NOTED
SPEC. NO. FAC M5061

SIGNATURES ON INDEX SHEET INDICATE ACCEPTANCE OF THIS SHEET
REF. NO. E5 OF 17

DRAWING NO. FAC-AA-4473-E5
SHEET 12 OF 28

MSFC-FORM 232 REV. 8-21-89-RCL

N:*DesignProjects*4473*AA-3462737*e5.dgn

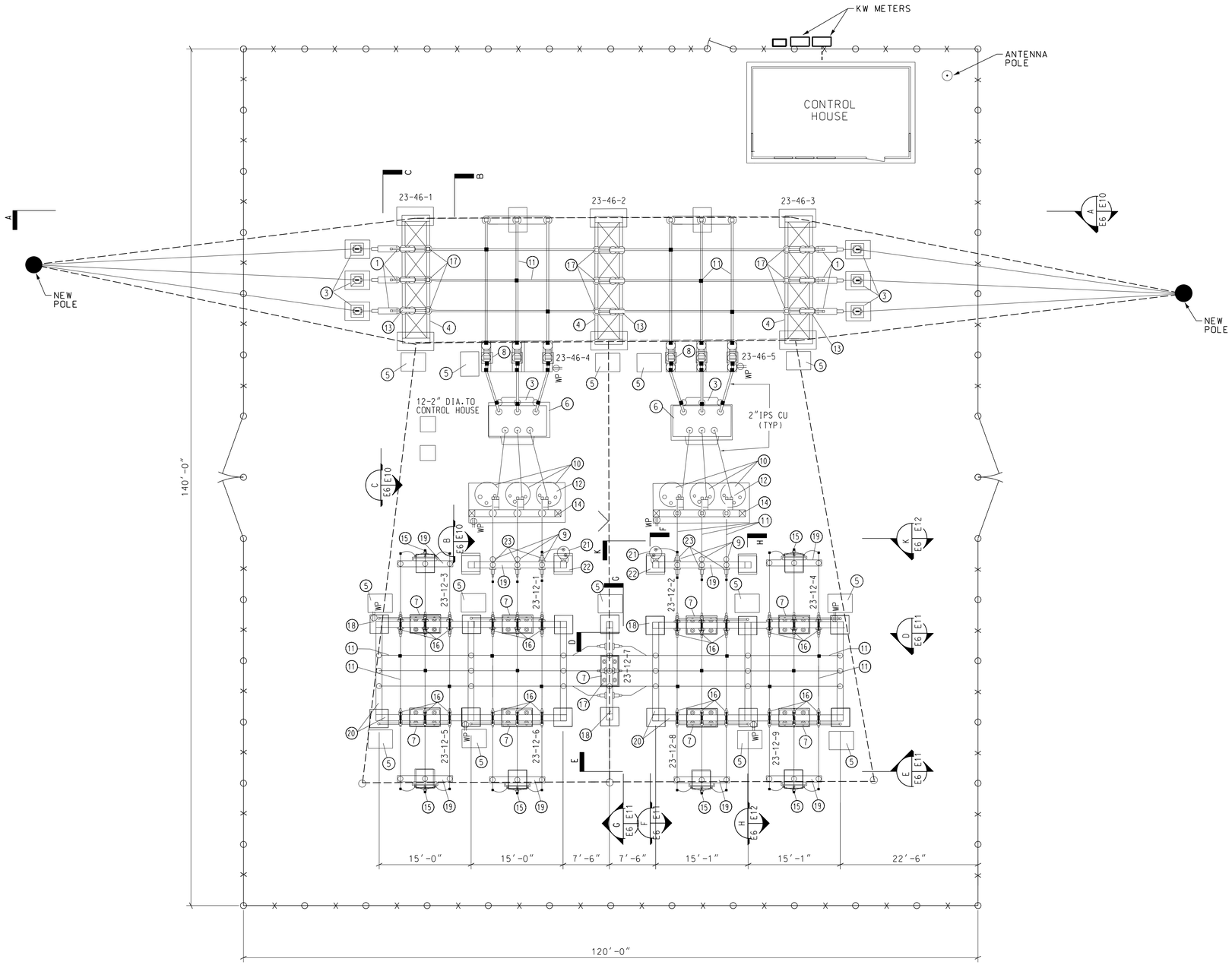

UNIT SUBSTATION 23 PLAN
SCALE: 1" = 20'-0"

EQPT NO.	EQUIPMENT
1	SUSPENSION INSULATORS (5-46kV) AT DEADEND
2	STATIC BRACKET
3	SURGE ARRESTERS
4	MOTOR OPERATED LOAD BREAK AIR SWITCH
5	SWITCH OPERATOR PLATFORM PLATE
6	POWER TRANSFORMER (7500/9375 KVA OA/FA @ 55°/65°C)
7	15 KV POWER CIRCUIT BREAKER
8	MOTOR OPERATED FAULT INTERRUPTER SWITCH (SF6 INTERRUPTER))
9	15 KV OUTDOOR CURRENT TRANSFORMER
10	7200V, 1PH, 333 KVA STEP VOLTAGE REGULATOR
11	2" COPPER TUBULAR BUS (EXTRA-HEAVY PIPE SIZE), OR ALUMINUM ANGLE WITH EQUAL OR GREATER MECHANICAL STRENGTH AND CURRENT RATING.
12	REGULATOR BYPASS SWITCH
13	INSULATOR SUPPORTS
14	REGULATOR SWITCH AND BUSSING STRUCTURE
15	UNDERGROUND TO AERIAL TERMINATION
16	GANG OPERATED BYPASS SWITCH (DISCONNECT)
17	HOOK STICK OPERATED DISCONNECT SWITCH
18	BREAKER BUS SUPPORT/BYPASS STRUCTURE (15kV)
19	15kV BUS SUPPORT STRUCTURE
20	15kV MAIN & TRANSFER BUS SUPPORT STRUCTURE
21	STATION SERVICE TRANSFORMER
22	POTENTIAL TRANSFORMERS
23	FUSED HOOK STICK DISCONNECT SWITCH

PRELIMINARY CADD DWG.
CHANGES TO THIS DRAWING SHALL BE MADE ON CADD ONLY.
3462737 09-11-13
LATEST CADD UPDATE: 12-11-14 1:00 PM
BY: FLETCHER

REV.	BY	DATE	REVISION	C.I. NO.	APPROVED

Marshall Space Flight Center
Huntsville, Alabama 35812

WORK REQUEST NO. 3462737

BUILDING 4473
REVITALIZE CENTRAL CHILLER WATER FACILITY-ELECTRICAL
UNIT SUBSTATION 23 - EQUIPMENT LAYOUT

AE FIRM: KAYA Associates, Inc.
NASA AE CONTRACT NO. NAS8- NNM11AA39C

SUBMITTED: JUERGEN HAUKOHL
APPROVAL RECOMMENDED: AS22 PROJECT A/E
APPROVED:
AE: DATE:
APPROVAL RECOMMENDED: AS22 SUPPORT A/E
AS22 GROUP LEAD DATE:
DESIGNED M. DEY
DRAWN FLETCHER
CHECKED S. WASILEFSKY
APPROVAL RECOMMENDED: KAYA Associates,Inc.
SCALE: AS NOTED
SPEC. NO. FAC M5061

SIGNATURES ON INDEX SHEET INDICATE ACCEPTANCE OF THIS SHEET
REF. NO. E6 OF 17

DRAWING NO. FAC-AA-4473-E6
SHEET 13 OF 28

MSFC-FORM 232 REV. 8-21-89-RCL

N:*DesignProjects*4473*AA-3462737*e6.dgn

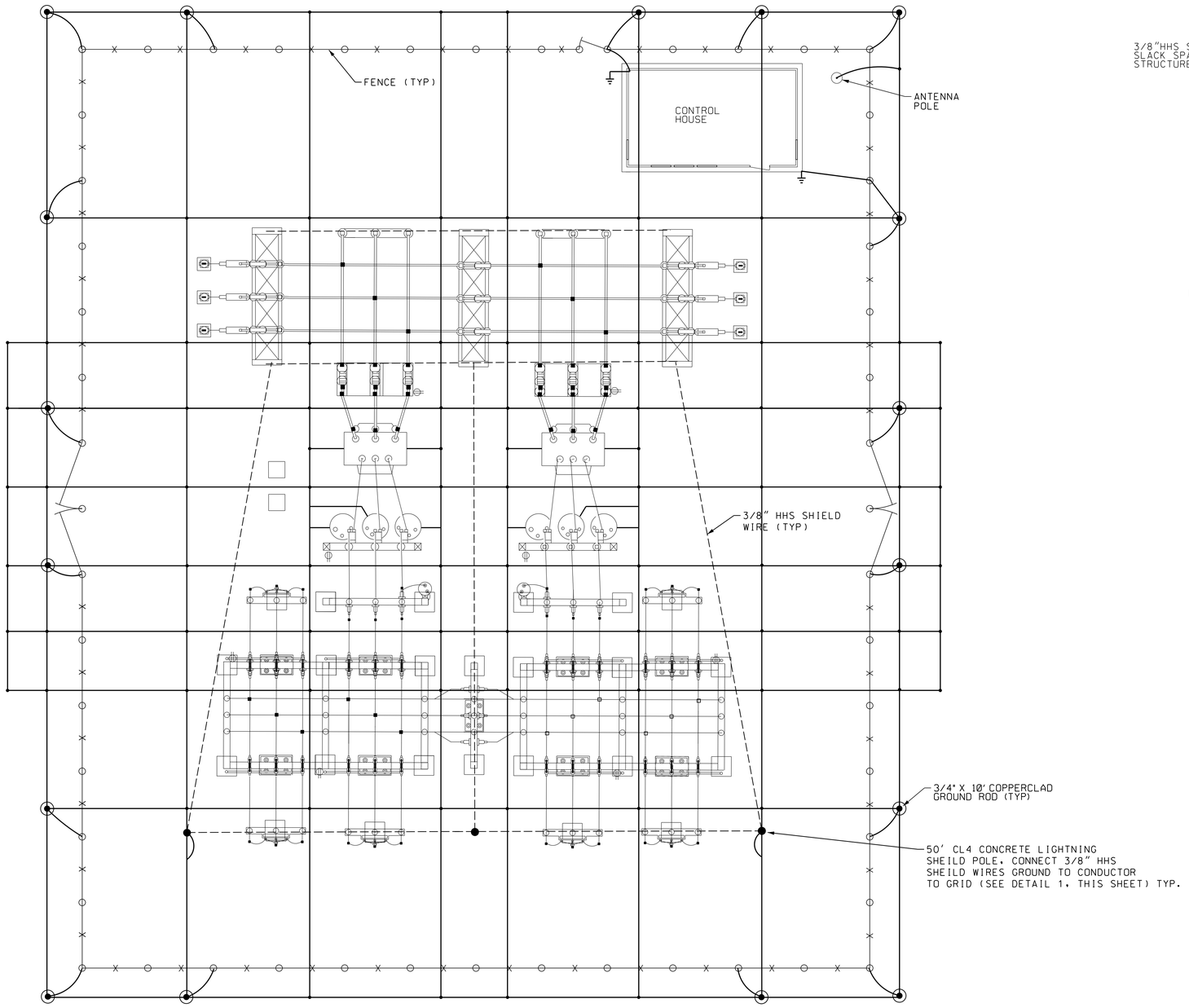

UNIT SUBSTATION 23 - GROUNDING PLAN

SCALE: 1/8" = 1'-0"

0 4' 8' 12'

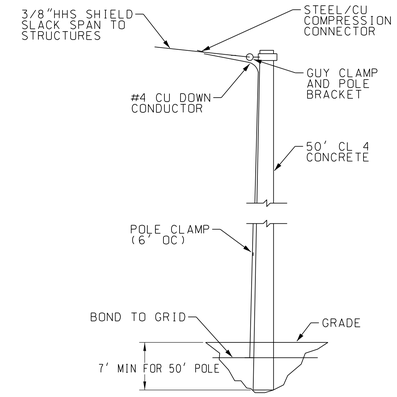

1 / E7 LIGHTING SHIELD POLE
NOT TO SCALE

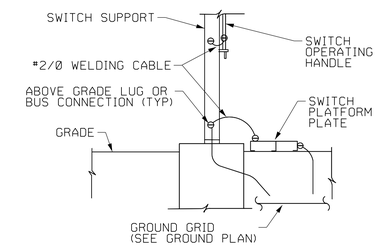

2 / E7 DETAIL 2
NOT TO SCALE

NOTES:

1. PROVIDE SWITCH GROUNDING PLATES AND GROUND RODS PER DETAIL 2, THIS SHEET AND SPECIFICATIONS IN ADDITION TO ITEMS SHOWN ON GROUNDING PLAN.
2. GROUND GRID CONDUCTORS SHALL BE #4/O BARE COPPER BURIED APPROX. AS SHOWN IN DETAIL 3, SHEET E14. ALL CROSS CONNECTIONS AND OTHER CONNECTIONS MADE UNDERGROUND SHALL BE MADE USING EXOTHERMIC WELDS OR OTHERWISE AS SPECIFIED.
3. ROUTE GROUND GRID CONDUCTORS AS REQUIRED TO AVOID PASSING UNDER FOUNDATIONS. AVERAGE SPACING OF RECTANGULAR GRID ELEMENTS SHALL BE MAINTAINED.
4. CONNECT FENCE TO GROUND GRID AS SPECIFIED AND AS SHOWN ON DETAIL 4, SHEET E14.
5. A 5" GRAVEL OR CRUSHED STONE INSULATION LAYER SHALL BE PLACED THROUGHOUT THE SUBSTATION YARD. MATERIAL SHALL GRADE SUCH THAT THE WET RESISTIVITY EXCEEDS 3000 OHM-METER AND MEETS OR EXCEEDS THE REQUIREMENTS SPECIFIED IN SECTION 26 11 13 OF M5061, NETA ATS AND IEEE 81. THIS REQUIREMENT APPLIES TO MATERIAL UP TO TWO FEET BEYOND THE GROUND GRID CONDUCTOR. SEE CIVIL DRAWINGS AND SPECS FOR ADDITIONAL REQUIREMENTS FOR GRADING AND SURFACE COURSE MATERIAL.
6. SEE CIVIL DRAWINGS FOR SITE GRADING PLAN.
7. CONNECT THE ANTENNA POLE WITH GROUND GRID USING #4 CU DOWN CONDUCTOR.

PRELIMINARY CADD DWG.
CHANGES TO THIS DRAWING SHALL BE MADE ON CADD ONLY.
3462737 09-11-13
LATEST CADD UPDATE: 12-12-14 04:00 PM
BY: DEY

REV.	BY	DATE	REVISION	C.I. NO.	APPROVED

Marshall Space Flight Center
Huntsville, Alabama 35812

WORK REQUEST NO. 3462737

BUILDING 4473

REVITALIZE CENTRAL CHILLED WATER FACILITY - ELECTRICAL
UNIT SUBSTATION 23 GROUNDING PLAN

AE FIRM: KAYA Associates, Inc.
NASA AE CONTRACT NO. NAS8- NNM11AA39C

SUBMITTED: JUERGEN HAUKOHL
APPROVAL RECOMMENDED: AS22 PROJECT A/E
APPROVED:
AE: DATE:
APPROVAL RECOMMENDED: AS22 SUPPORT A/E
AS22 GROUP LEAD DATE:
DESIGNED M. DEY
DRAWN J. FLETCHER
CHECKED S. WASILEFSKY
APPROVAL RECOMMENDED: KAYA Associates,Inc.
SCALE: AS NOTED
SPEC. NO. FAC M5061

SIGNATURES ON INDEX SHEET INDICATE ACCEPTANCE OF THIS SHEET

REF. NO. E7 OF 17

DRAWING NO. FAC-AA-4473-E7
SHEET 14 OF 28

MSFC-FORM 232 REV. 8-21-89-RCL

N:*DesignProjects*4473*AA-3462737*e7.dgn

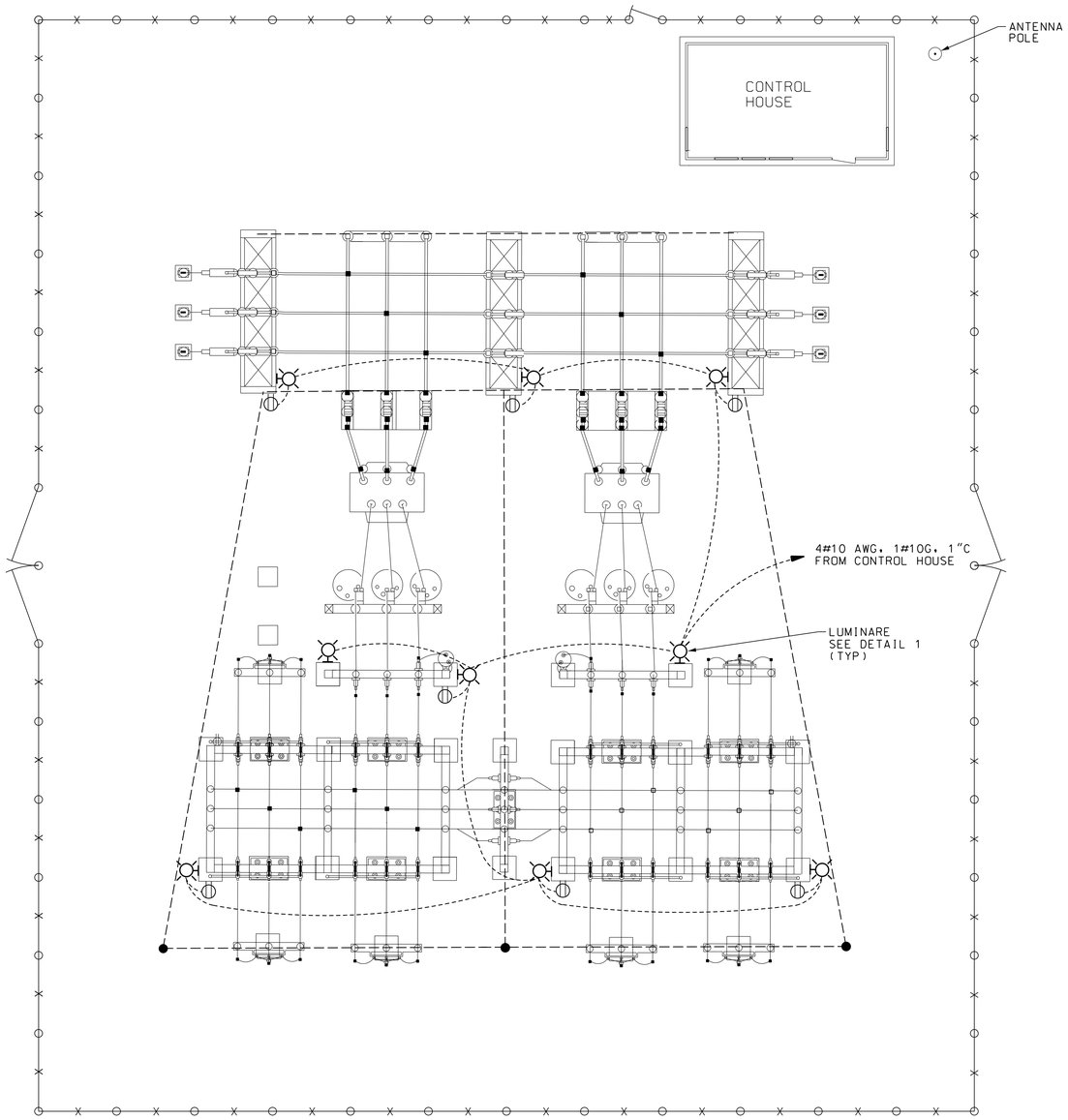

UNIT SUBSTATION 23 - LIGHTING PLAN
SCALE: 1/8" = 1'-0"
0 4' 8' 12'

NOTES:

1. PROVIDE 240 VOLT LIGHTING CIRCUITS AND 120 VOLT RECEPTACLE CIRCUITS AS SHOWN.
2. RUN A GREEN GROUND WIRE TO EACH RECEPTACLE FROM THE CONTROL HOUSE AC PANEL.
3. PROVIDE PHOTOELECTRIC CONTROL ON LUMINAIRE CIRCUITS.
4. LUMINAIRE SHALL BE 175W, 240V METAL HALIDE DIE CAST HOUSING. TYPE HOLOPHANE #SU1A-175MH-24-TL-PR.

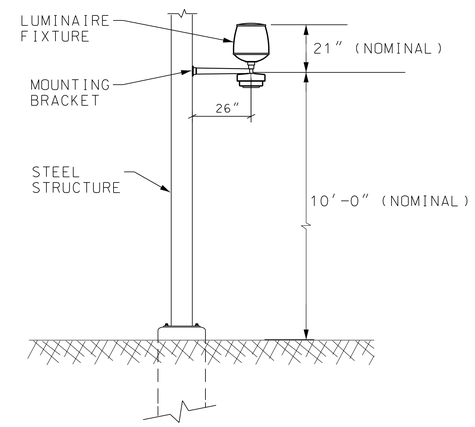

1 / E8 LIGHTING INSTALLATION DETAIL
NOT TO SCALE

PRELIMINARY CADD DWG.
CHANGES TO THIS DRAWING SHALL BE MADE ON CADD ONLY.
3462737 09-11-13
LATEST CADD UPDATE: 12-11-14 1:15 PM
BY: FLETCHER

REV.	BY	DATE	REVISION	C.I. NO.	APPROVED

Marshall Space Flight Center
Huntsville, Alabama 35812

WORK REQUEST NO. 3462737

BUILDING 4473

REVITALIZE CENTRAL CHILLED WATER FACILITY - ELECTRICAL
UNIT SUBSTATION 23 LIGHTING PLAN

AE FIRM: KAYA Associates, Inc.
NASA AE CONTRACT NO. NAS8- NNM11AA39C

SUBMITTED: JUERGEN HAUKOHL
APPROVAL RECOMMENDED: AS22 PROJECT A/E
APPROVED:
AE: DATE:
APPROVAL RECOMMENDED: AS22 SUPPORT A/E
AS22 GROUP LEAD DATE:
DESIGNED M. DEY
DRAWN J. FLETCHER
CHECKED S. WASILEFSKY
APPROVAL RECOMMENDED: KAYA Associates,Inc.
SCALE: AS NOTED
SPEC. NO. FAC M5061

SIGNATURES ON INDEX SHEET INDICATE ACCEPTANCE OF THIS SHEET
REF. NO. E8 OF 17

DRAWING NO. FAC-AA-4473-E8
SHEET 15 OF 28

MSFC-FORM 232 REV. 8-21-89-RCL

N:*DesignProjects*4473*AA-3462737*e8.dgn

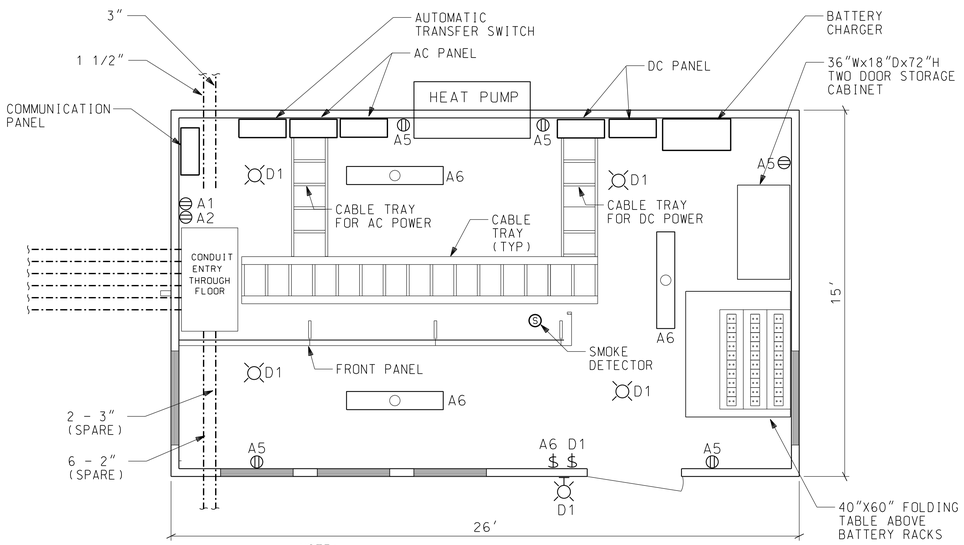

NOTE:
ACTUAL POWER CIRCUITING FOR HOUSE SHALL BE DESIGNED BY CONTRACTOR TO SUIT EQUIPMENT PROVIDED AND SHALL BE SUBMITTED FOR APPROVAL. SEE SPECS FOR FURTHER REQUIREMENTS.

UNIT SUBSTATION 23 - CONTROL HOUSE

SCALE: 3/16" = 1'-0" 0 2' 4' 6'

NOTE: MIMIC BUS SHALL BE INSTALLED SIMILAR TO THIS SKETCH.
PANEL LAYOUTS ARE TYPICAL OF DESIRED CONFIGURATION.
VARY LAYOUT AS REQUIRED AND APPROVED TO SUIT DEVICES AND RELAYS FURNISHED. SEE ONE-LINE AND SPEC'S FOR DEVICES REQUIRED.

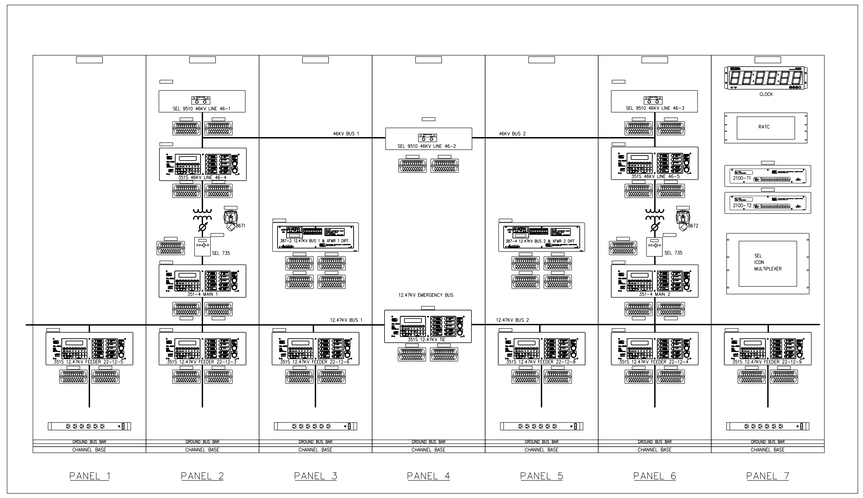

FRONT PANEL

CONTROL PANEL LAYOUT

N.T.S.

NOTE: CONTROL HOUSE & SWITCHBOARD SHALL BE MANUFACTURED BY SEL.
EXTERIOR COLOR AND FINISH TO BE SELECTED FROM MANUFACTURER'S STANDARD COLOR AND FINISH.

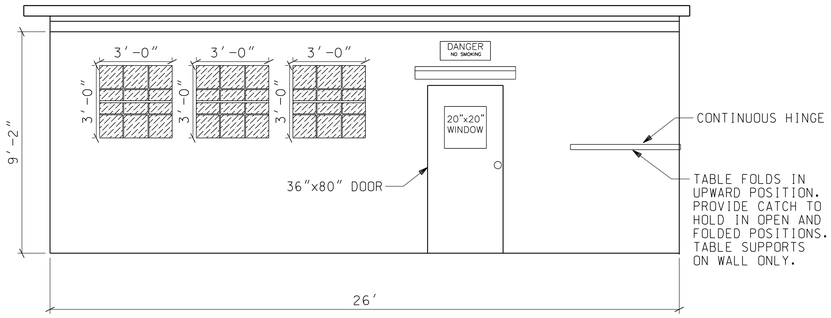

FRONT ELEVATION

N.T.S.

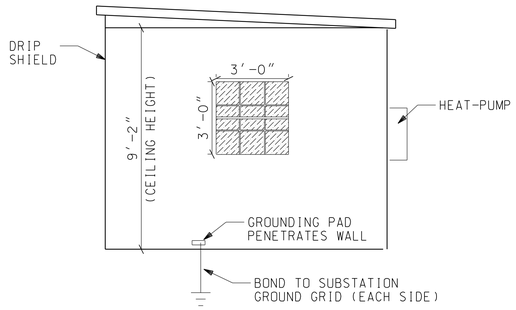

RIGHT SIDE ELEVATION

N.T.S.

NOTES:

1. CONTROL HOUSE SHALL BE PREFABRICATED CONCRETE SHELTER AS MANUFACTURED BY VFP, INC.
2. SIZE, LAYOUT AND DIMENSIONS SHALL BE VARIED AS REQUIRED TO SUIT ACTUAL EQUIPMENT AND DEVICES FURNISHED.
3. CONTRACTOR SHALL FURNISH ALL RELAYS, SWITCHES, CONTROL DEVICES AND ALL ASSOCIATED EQUIPMENT REQUIRED FOR A COMPLETELY FUNCTIONAL CONTROL HOUSE AND SWITCHBOARD TO ACCOMPLISH ALL FUNCTIONS SPECIFIED AND SHOWN ON THE DRAWINGS.
4. ALL LOCAL AND REMOTE STATUS FROM EACH BREAKER SHALL BE BROUGHT BACK TO CONTROL HOUSE.
5. PROVIDE FOLLOWING BUILDING ALARM FOR CONTROL HOUSE:
   A. DOOR
   B. BATTERY CHARGE
   C. SMOKE DETECTOR
   D. HYDROGEN DETECTOR
   E. HIGH AND LOW TEMPERATURE
   F. SURGE PROTECTOR
   G. STATION SERVICE #1
   H. STATION SERVICE #2
   I. SPARES 3
6. REFER TO SPECIFICATIONS FOR ADDITIONAL REQUIREMENTS.

- EMERGENCY LIGHT FIXTURE, 60W KEYLESS
$ - 120V AC (OR 125VDC) LIGHT SWITCH
- 120V AC RECEPTACLE
- 240V AC RECEPTACLE
- 120V 2 LAMP STRIP FLUORESCENT WITH WIRE GUARD
A1 INDICATES CKT # - A=AC PANEL, D= DC PANEL

PRELIMINARY CADD DWG.
CHANGES TO THIS DRAWING SHALL BE MADE ON CADD ONLY.
3462737 09-11-13
LATEST CADD UPDATE: 12-12-14 04:00 PM
BY: DEY

REV.	BY	DATE	REVISION	C.I. NO.	APPROVED

Marshall Space Flight Center
Huntsville, Alabama 35812

WORK REQUEST NO. 3462737

BUILDING 4473

REVITALIZE CENTRAL CHILLED WATER FACILITY - ELECTRICAL
UNIT SUBSTATION 23 - CONTROL HOUSE

AE FIRM: KAYA Associates, Inc.
NASA AE CONTRACT NO. NAS8-: NNM11AA39C

SUBMITTED: JUERGEN HAUKOHL
APPROVAL RECOMMENDED: AS22 PROJECT A/E
APPROVED:
AE: DATE:
APPROVAL RECOMMENDED: AS22 SUPPORT A/E
AS22 GROUP LEAD DATE:
DESIGNED M. DEY
DRAWN J. FLETCHER
CHECKED S. WASILEFSKY
APPROVAL RECOMMENDED: KAYA Associates,Inc.
SCALE: AS NOTED
SPEC. NO. FAC M5061
DRAWING NO. FAC-AA-4473-E9
SHEET 16 OF 28

SIGNATURES ON INDEX SHEET INDICATE ACCEPTANCE OF THIS SHEET
REF. NO. E9 OF 17

MSFC-FORM 232 REV. 8-21-89-RCL

N:*DesignProjects*4473*AA-3462737*e9.dgn

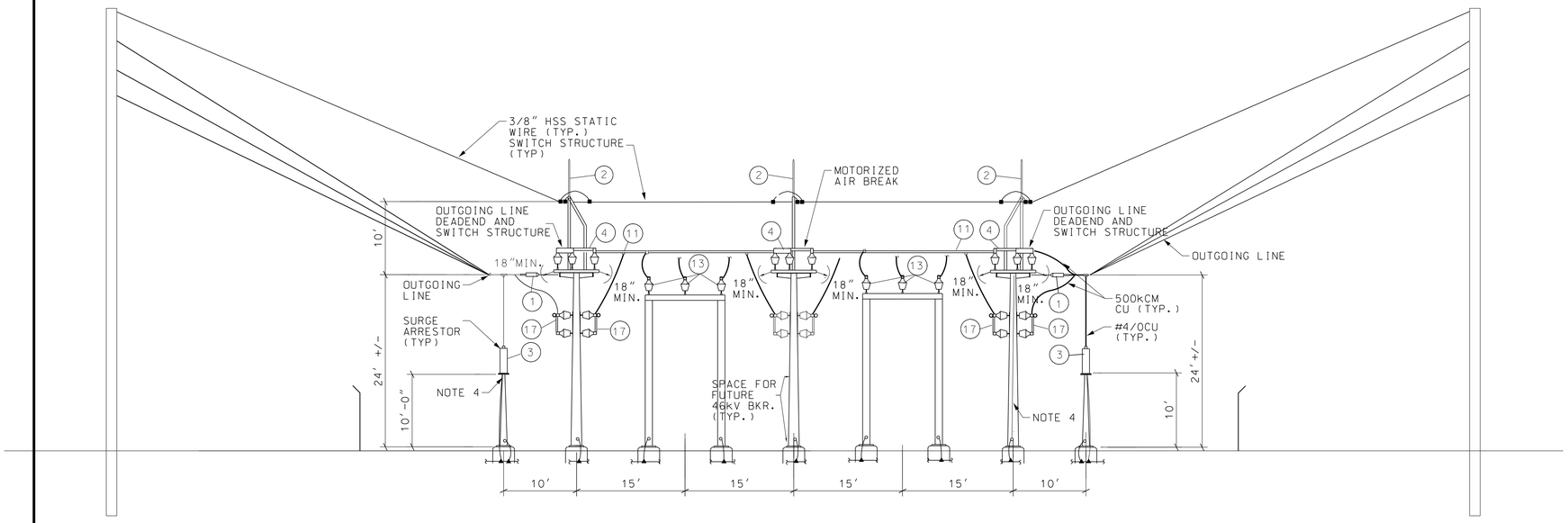

SECTION A-A

A 46KV STRUCTURE ELEVATION
E6 E10 SCALE: 1/8" = 1'-0"

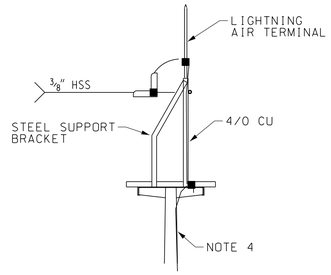

1 STATIC WIRE ATTACHMENT
E10 E10 NOT TO SCALE

NOTES:

1. ○ INDICATES EQUIPMENT IDENTIFICATION (SEE TABLE, SHEET E6)
2. MINIMUM OF 2 GROUND CONNECTIONS REQUIRED TO EACH TRANSFORMER. CONNECT TO GROUND PADS ON TRANSFORMER.
3. ▲ INDICATES GROUND CONNECTIONS. SEE GROUNDING PLAN.
4. RUN #4/0 GROUND CABLE LOOP UP TO SURGE ARRESTER BASE. CONNECT TO ALL EQPT. AND STATIC BRACKET AND BRING LOOP DOWN OPPOSITE STRUCTURE LEG.
5. 2" IPS BUSES & CONDUCTORS SHALL BE COPPER OR ALUMINUM NOTE THAT ANGLE CONDUCTORS MAY BE EASIER TO CONSTRUCT THAN TUBING.

CLEARANCES: (APPLIES TO ALL SUBSTATION AND SWITCHING STRUCTURE DRAWINGS)

1. ALL STRUCTURES FOUNDATION SHALL BE A MINIMUM OR 18 INCHES ABOVE GRADE.
2. ALL CLEARANCES SHALL MEET OR EXCEED VALUES LISTED AS "RECOMMENDED" IN ANSI STANDARD C37.32 FOR STATION BUS, SWITCHES, CIRCUIT SWITCHERS AND ALL OTHER STRUCTURE MOUNTED ITEMS. THE CONTRACTOR SHALL SUPPLY DRAWINGS FOR STRUCTURES TO BE FURNISHED THAT INCLUDE THE MINIMUM CLEARANCES AT VARIOUS POINTS AND THE DESIGN VALUES FOR WORST CASE LOCATIONS.
3. THE CONTRACTOR SHALL MODIFY EQUIPMENT SUPPLIED AS NECESSARY TO MAINTAIN REQUIRED CLEARANCE AT NO ADDITIONAL COST TO THE GOVERNMENT. LOCATIONS, SIZES AND CONFIGURATIONS SHOWN MAY BE VARIED SLIGHTLY TO OBTAIN PROPER CLEARANCE FOR ITEMS TO BE FURNISHED, HOWEVER, OVERALL DIMENSIONS AND DIMENSIONS SHOWN FOR ACCESS AND MAINTENANCE SHALL NOT BE CHANGED.
4. MINIMUM SAFETY CLEARANCES SHALL BE IN ACCORDANCE WITH ANSI C2, EXCEPT THAT ACTUAL CLEARANCE FURNISHED SHALL EXCEED MINIMUMS IN STANDARD BY 6 INCHES. VERTICAL CLEARANCE SHALL BE MEASURED FROM TOPS OF FOOTINGS OR PADS TO ENERGIZED ITEMS AND IN NO CASE SHALL THAT DISTANCE BE LESS THAN 9 FEET.
5. PROVIDE VIBRATION ABSORBERS FOR ALL BUS TERMINATIONS, OTHERWISE PROVIDE EQUIVALENT SIZE FLEXIBLE WIRES.

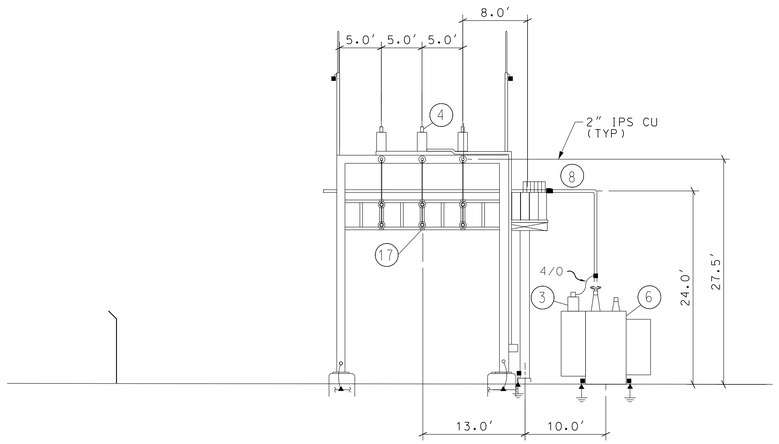

SECTION C-C

C 46KV STRUCTURE ELEVATION
E6 E10 SCALE: 1/8" = 1'-0"

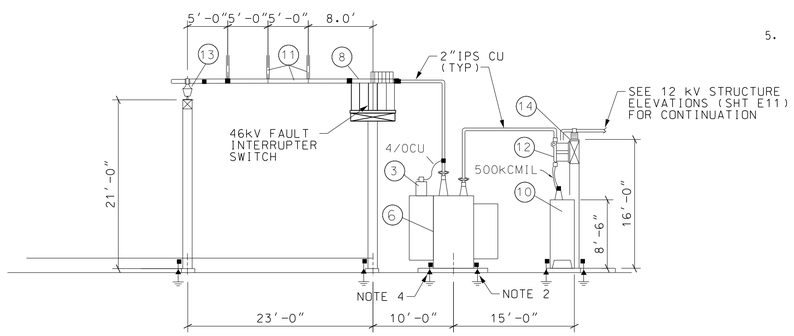

SECTION B-B

B 46KV STRUCTURE ELEVATION
E6 E10 SCALE: 1/8" = 1'-0"

PRELIMINARY CADD DWG.
CHANGES TO THIS DRAWING SHALL BE MADE ON CADD ONLY.
3462737 09-11-13
LATEST CADD UPDATE: 05-05-15 9:00 AM
BY: FLETCHER

REV.	BY	DATE	REVISION	C.I. NO.	APPROVED

Marshall Space Flight Center
Huntsville, Alabama 35812

WORK REQUEST NO. 3462737

BUILDING 4473
REVITALIZE CENTRAL CHILLER WATER FACILITY-ELECTRICAL
UNIT SUBSTATION 23 - 46KV STRUCTURE ELEVATIONS

AE FIRM: KAYA Associates, Inc.
NASA AE CONTRACT NO. NAS8- NNM11AA39C

SUBMITTED: JUERGEN HAUKOHL
APPROVED:
APPROVAL RECOMMENDED: AS22 PROJECT A/E
AE: DATE:
APPROVAL RECOMMENDED: AS22 GROUP LEAD DATE:
DESIGNED M. DEY
DRAWN J. FLETCHER
CHECKED S. WASILEFSKY
APPROVAL RECOMMENDED: AS22 SUPPORT A/E
APPROVAL RECOMMENDED: KAYA Associates,Inc.
SCALE: AS NOTED
SPEC. NO. FAC M5061

SIGNATURES ON INDEX SHEET INDICATE ACCEPTANCE OF THIS SHEET

REF. NO. E10 OF 17

DRAWING NO. FAC-AA-4473-E10
SHEET 17 OF 28

MSFC-FORM 232 REV. 8-21-89-RCL

N:*DesignProjects*4473*AA-3462737*e10.dgn

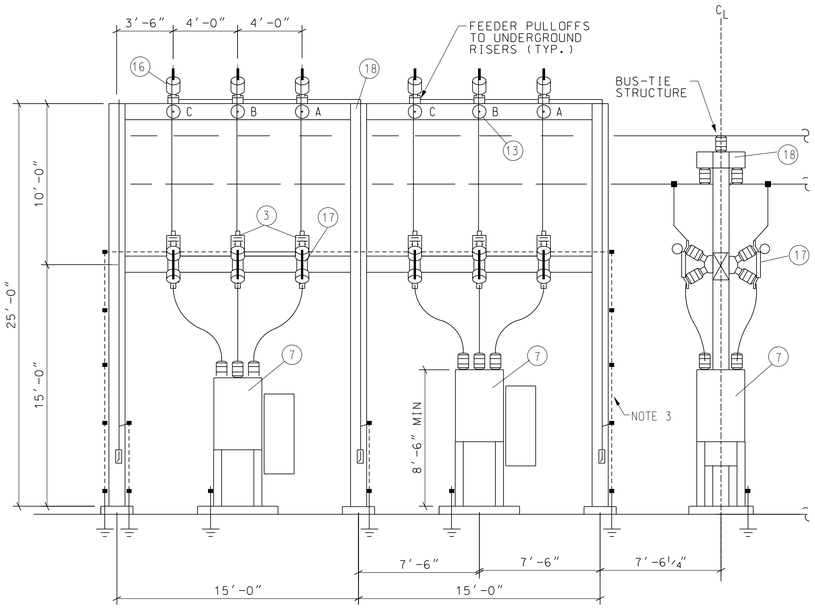

SECTION D-D

D 12kV STRUCTURE ELEVATION
E6 E11 SCALE: 1/4" = 1'-0"

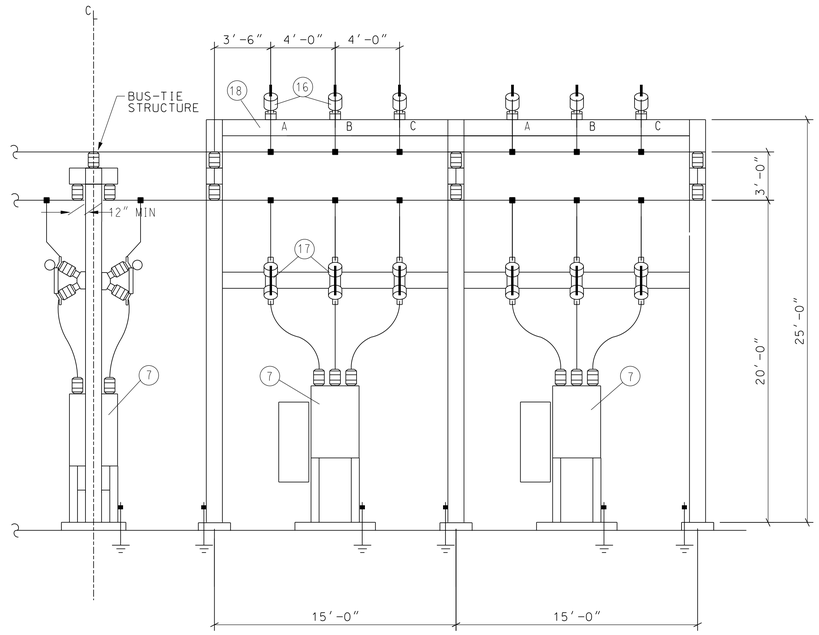

SECTION E-E

E 12kV STRUCTURE ELEVATION
E6 E11 SCALE: 1/4" = 1'-0"

NOTES:

1. ◯ INDICATES EQUIPMENT IDENTIFICATION (SEE TABLE, SHEET E6.)
2. ⏚ INDICATES GROUND CONNECTIONS. SEE GROUNDING PLAN.
3. 4/0 GROUND CABLE LOOP TO SURGE ARRESTOR BASE. CONNECT ALL EQUIPMENT, STATIC BRACKET, ETC., AND BRING LOOP DOWN OPPOSITE LEG OF STRUCTURE.

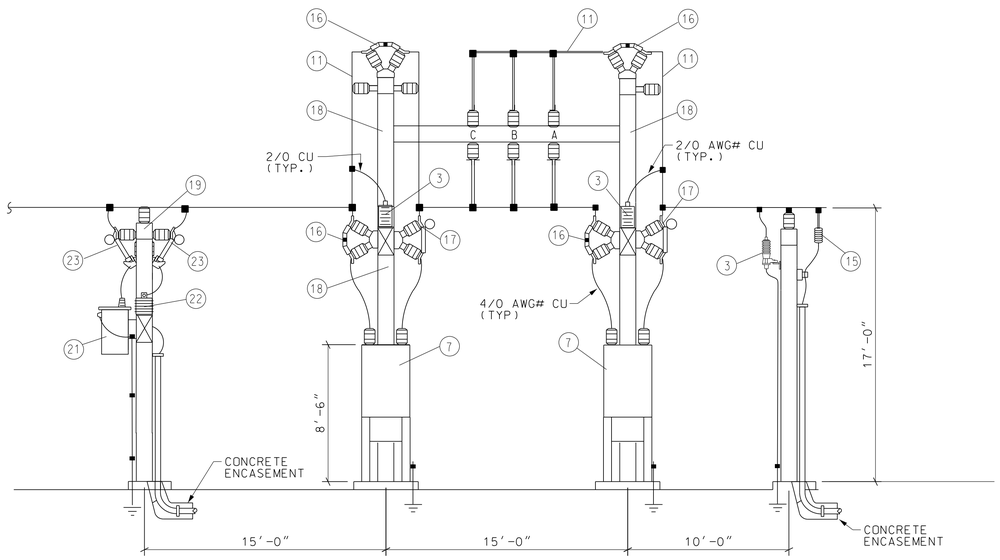

SECTION F-F

F 12kV STRUCTURE ELEVATION
E6 E11 SCALE : 1/4" = 1'-0"

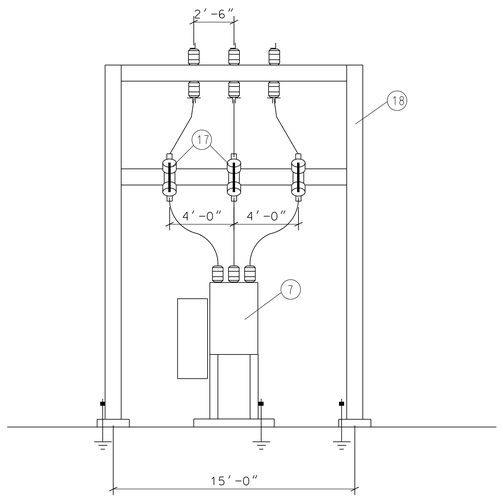

SECTION G-G

G 12kV STRUCTURE ELEVATION
E6 E11 SCALE: 1/4" = 1'-0"

PRELIMINARY CADD DWG.
CHANGES TO THIS DRAWING SHALL BE MADE ON CADD ONLY.
3462737
09-11-13
LATEST CADD UPDATE: 05-04-15 04:00 PM
BY: FLETCHER

REV.	BY	DATE	REVISION	C.I. NO.	APPROVED

Marshall Space Flight Center
Huntsville, Alabama 35812

WORK REQUEST NO. 3462737

BUILDING 4473
REVITALIZE CENTRAL CHILLER WATER FACILITY-ELECTRICAL
UNIT SUBSTATION 23 - 12KV STRUCTURE ELEVATIONS

AE FIRM: KAYA Associates, Inc.
NASA AE CONTRACT NO. NAS8- NNM11AA39C

SUBMITTED: JUERGEN HAUKOHL
APPROVAL RECOMMENDED: AS22 PROJECT A/E
APPROVED:
AE: DATE:
APPROVAL RECOMMENDED: AS22 SUPPORT A/E
AS22 GROUP LEAD DATE:
DESIGNED M. DEY
DRAWN J. FLETCHER
CHECKED S. WASILEFSKY
APPROVAL RECOMMENDED: KAYA Associates,Inc.
SCALE: AS NOTED
SPEC. NO. FAC M5061

SIGNATURES ON INDEX SHEET INDICATE ACCEPTANCE OF THIS SHEET

REF. NO. E11 OF 17

DRAWING NO. FAC-AA-4473-E11
SHEET 18 OF 28

MSFC-FORM 232 REV. 8-21-89-RCL

N:*DesignProjects*4473*AA-3462737*e11.dgn

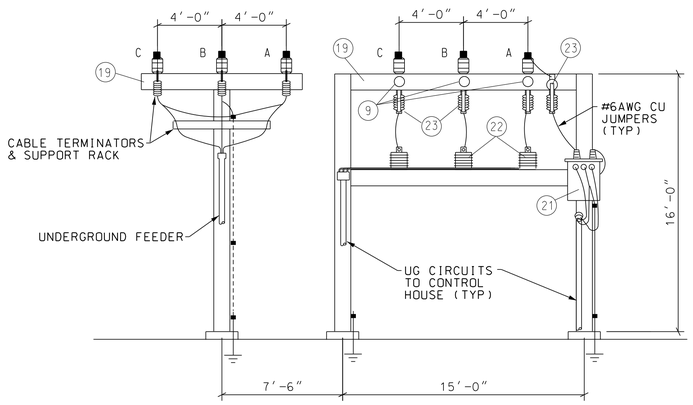

SECTION K-K

K 12kV STRUCTURE ELEVATION
E6 E12 SCALE: 1/4" = 1'-0"

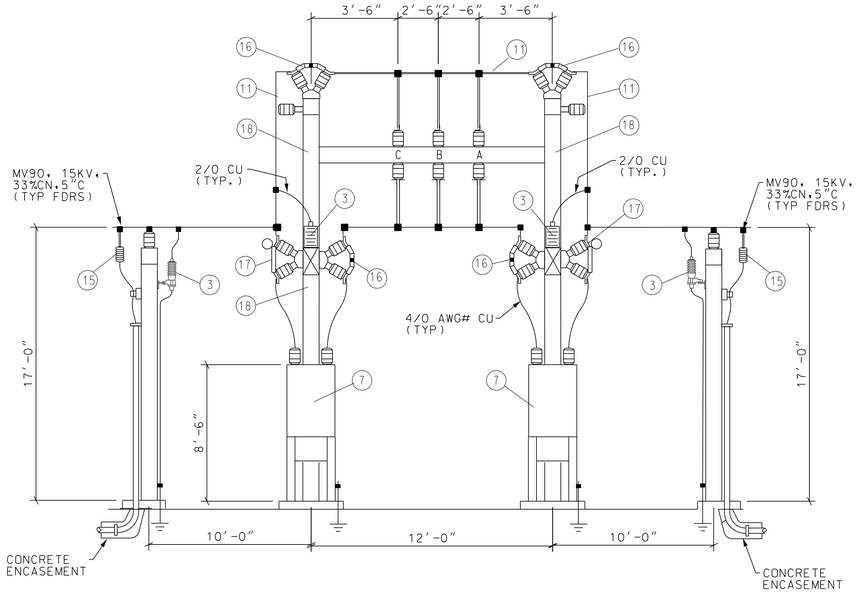

SECTION H-H

H 12kV STRUCTURE ELEVATION
E6 E12 SCALE: 1/4" = 1'-0"

NOTE:

1. ◯ INDICATES EQUIPMENT IDENTIFICATION. (SEE SHEET E6).

PRELIMINARY CADD DWG.
CHANGES TO THIS DRAWING SHALL BE MADE ON CADD ONLY.
3462737
09-11-13
LATEST CADD UPDATE: 05-04-15
BY: FLETCHER 4:15 PM

REV.	BY	DATE	REVISION	C.I. NO.	APPROVED

Marshall Space Flight Center
Huntsville, Alabama 35812

WORK REQUEST NO. 3462737

BUILDING 4473
REVITALIZE CENTRAL CHILLER WATER FACILITY-ELECTRICAL
UNIT SUBSTATION 23 - 12KV STRUCTURE ELEVATIONS

AE FIRM: KAYA Associates, Inc.
NASA AE CONTRACT NO. NAS8- NNM11AA39C

SUBMITTED: JUERGEN HAUKOHL
APPROVAL RECOMMENDED: AS22 PROJECT A/E
APPROVED:
AE: DATE:
APPROVAL RECOMMENDED: AS22 SUPPORT A/E
AS22 GROUP LEAD DATE:
DESIGNED M. DEY
DRAWN T. THOMAS
CHECKED S. WASILEFSKY
APPROVAL RECOMMENDED: KAYA Associates,Inc.
SCALE: AS NOTED
SPEC. NO. FAC M5061

SIGNATURES ON INDEX SHEET INDICATE ACCEPTANCE OF THIS SHEET

REF. NO. E12 OF 17

DRAWING NO.
FAC-AA-4473-E12
SHEET 19 OF 28

MSFC-FORM 232 REV. 8-21-89-RCL

N:*DesignProjects*4473*AA-3462737*e12.dgn

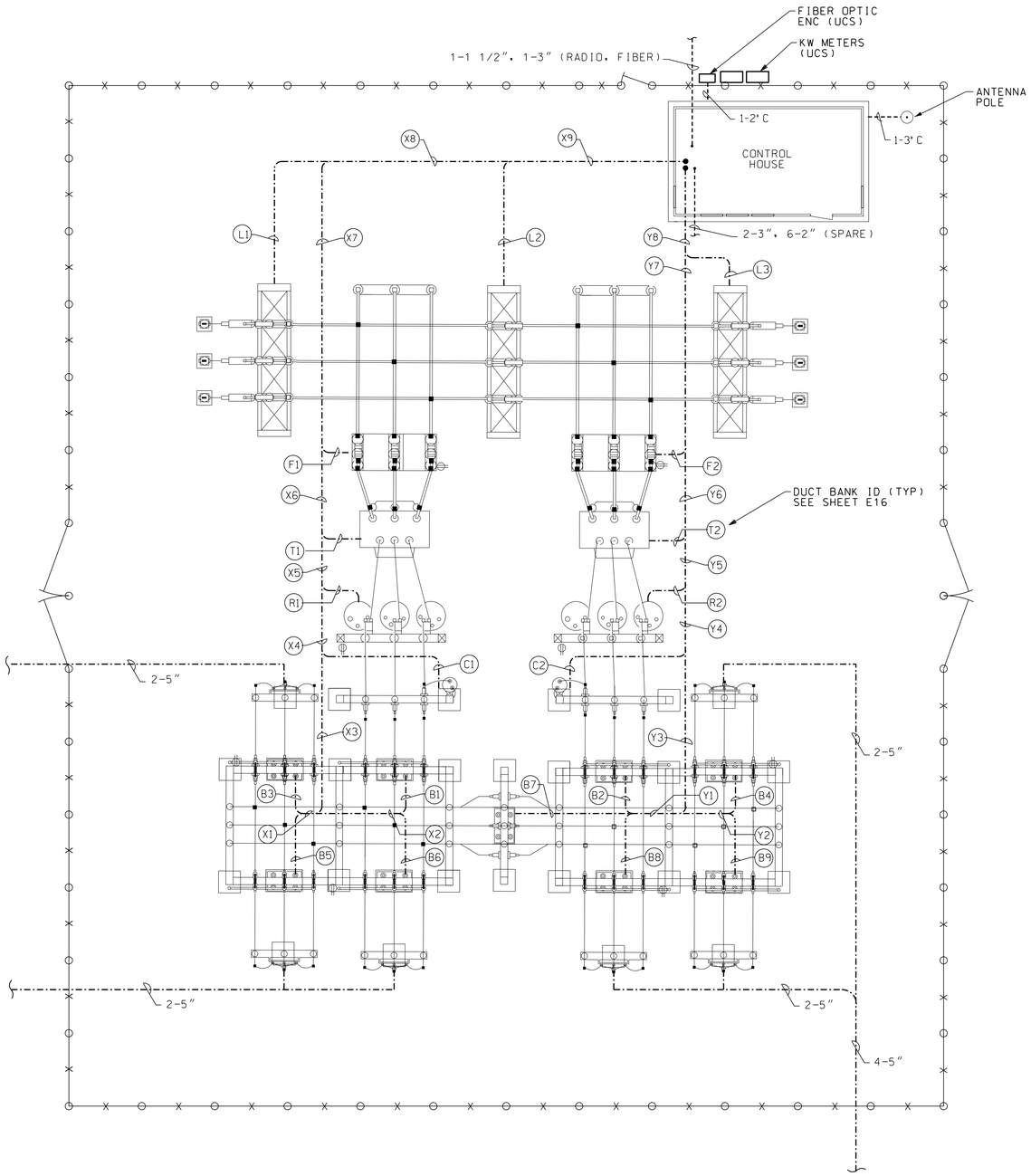

UNIT SUBSTATION 23
DUCT BANK PLAN

SCALE: 1/8" = 1'-0" 0 4' 8' 12'

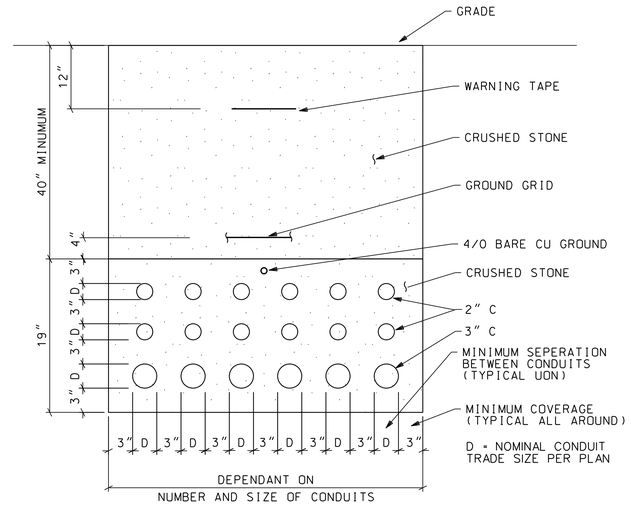

DETAIL - DUCT BANK SECTION

SCALE: 1 1/2" = 1'-0" 0 6" 1'

NOTE:

1. ◯ INDICATES DUCT BANK IDENTIFICATION. (SEE SHEET E16).

PRELIMINARY CADD DWG.

CHANGES TO THIS DRAWING SHALL BE MADE ON CADD ONLY.

3462737 09-11-13 LATEST CADD UPDATE: 12-15-14 8:00 AM BY: FLETCHER

REV.	BY	DATE	REVISION	C.A. NO.	APPROVED

Marshall Space Flight Center
Huntsville, Alabama 35812

WORK REQUEST NO. 3462737

BUILDING 4473

REVITALIZE CENTRAL CHILLED WATER FACILITY - ELECTRICAL

UNIT SUBSTATION 23 - DUCT BANK PLAN AND DETAILS

AE FIRM: KAYA Associates, Inc.

NASA AE CONTRACT NO. NAS8- NNM11AA39C

SUBMITTED: JUERGEN HAUKOHL

APPROVAL RECOMMENDED: AS22 PROJECT A/E

APPROVED:

AE: DATE:

APPROVAL RECOMMENDED: AS22 SUPPORT A/E

AS22 GROUP LEAD DATE:

DESIGNED M. DEY
DRAWN J. FLETCHER
CHECKED S. WASILEFSKY

APPROVAL RECOMMENDED: KAYA Associates,Inc.

DRAWING NO. FAC-AA-4473-E13

SCALE: AS NOTED

SPEC. NO. FAC M5061

SHEET 20 OF 28

SIGNATURES ON INDEX SHEET INDICATE ACCEPTANCE OF THIS SHEET

REF. NO. E13 OF 17

MSFC-FORM 232 REV. 8-21-89-RCL

N:*DesignProjects*4473*AA-3462737*e13.dgn

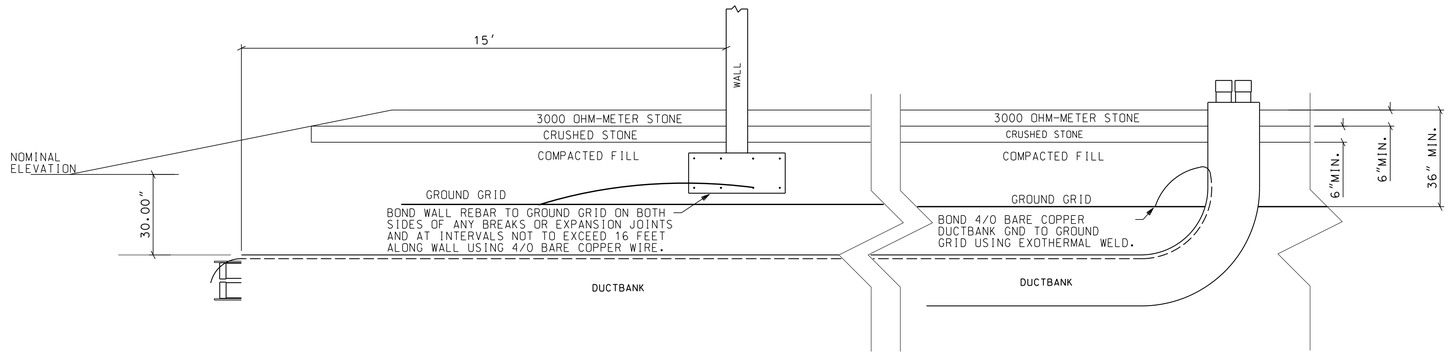

3 / E14 DUCT BANK ELEVATION
NOT TO SCALE

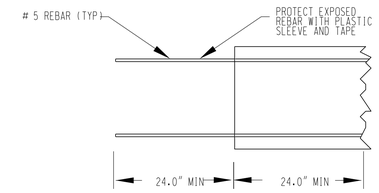

A / E14 SECTION A-A
NOT TO SCALE

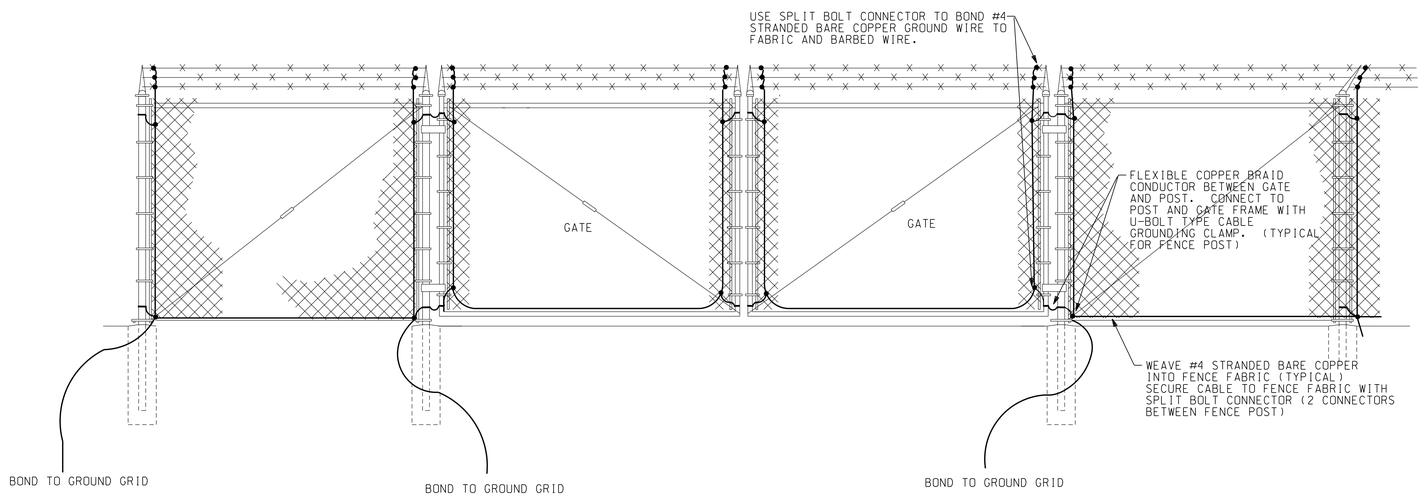

4 / E14 FENCE GROUNDING
NOT TO SCALE

NOTE: SEE SHEETS C2, C3 AND C5 FOR FENCE DETAILS

NOTE

GROUNDING OF PERSONNEL GATE SHALL BE SAME AS TRUCK GATE SHOWN.

PRELIMINARY CADD DWG.
CHANGES TO THIS DRAWING SHALL BE MADE ON CADD ONLY.
3462737
10-06-14
LATEST CADD UPDATE: 12-11-14
BY: FLETCHER 1:30 PM

REV.	BY	DATE	REVISION	C.N. NO.	APPROVED

Marshall Space Flight Center
Huntsville, Alabama 35812

WORK REQUEST NO. 3462737

BUILDING 4473

REVITALIZE CENTRAL CHILLED WATER FACILITY - ELECTRICAL

UNIT SUBSTATION 23 - DUCT BANK ELEVATION AND FENCE GROUNDING

AE FIRM: KAYA Associates, Inc.

NASA AE CONTRACT NO. NAS8- NNM11AA39C

SUBMITTED: JUERGEN HAUKOHL

APPROVAL RECOMMENDED: AS22 PROJECT A/E

APPROVED:

AE: DATE:

APPROVAL RECOMMENDED: AS22 SUPPORT A/E

AS22 GROUP LEAD DATE:

DESIGNED M. DEY
DRAWN J. FLETCHER
CHECKED S. WASILEFSKY

APPROVAL RECOMMENDED: KAYA Associates,Inc.

SCALE: AS NOTED

SPEC. NO. FAC M5061

DRAWING NO. FAC-AA-4473-E14

SHEET 21 OF 28

SIGNATURES ON INDEX SHEET INDICATE ACCEPTANCE OF THIS SHEET

REF. NO. E14 OF 17

MSFC-FORM 232 REV. 8-21-89-RCL

N:*DesignProjects*4473*AA-3462737*e14.dgn

TOP VIEW FOR
46KV LINE

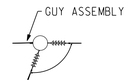

TOP VIEW FOR
12.47KV LINE

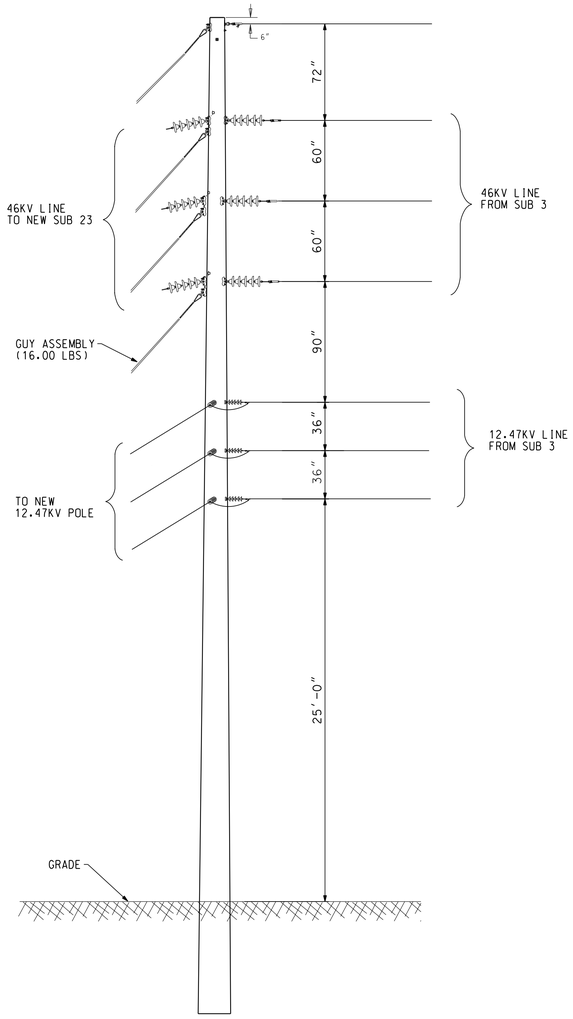

A E15 EAST DROP TO SUB 23
SCALE: 1/4" = 1'-0" 0 2' 4' 6'

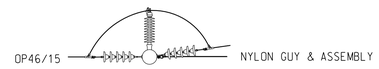

TOP VIEW FOR
46KV LINE

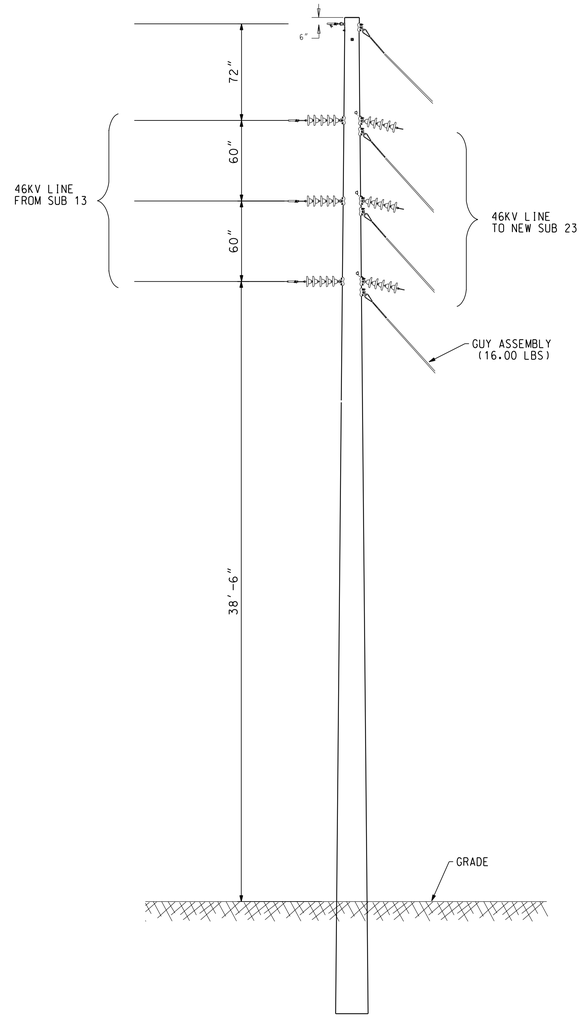

B E15 WEST DROP TO SUB 23
SCALE: 1/4" = 1'-0" 0 2' 4' 6'

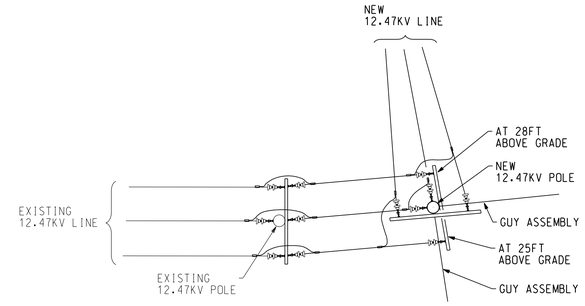

TOP VIEW FOR
12.47KV LINE

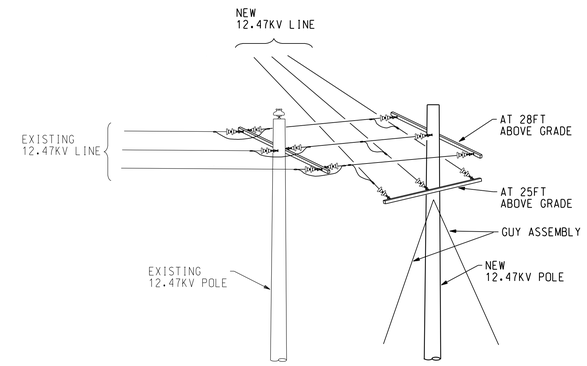

C E15 ISOMETRIC VIEW FOR 12.47KV LINE
NOT TO SCALE

PRELIMINARY CADD DWG.
CHANGES TO THIS DRAWING SHALL BE MADE ON CADD ONLY.
3462737 10-06-14
LATEST CADD UPDATE: 11-12-14 1:30 PM
BY: FLETCHER

REV.	BY	DATE	REVISION	C.I. NO.	APPROVED

Marshall Space Flight Center
Huntsville, Alabama 35812

WORK REQUEST NO. 3462737

BUILDING 4473

REVITALIZE CENTRAL CHILLED WATER FACILITY - ELECTRICAL
UNIT SUBSTATION 23 - POLE DETAILS

AE FIRM: KAYA Associates, Inc.
NASA AE CONTRACT NO. NAS8- NNM11AA39C

SUBMITTED: JUERGEN HAUKOHL
APPROVAL RECOMMENDED: AS22 PROJECT A/E
APPROVED:

AE: DATE:
APPROVAL RECOMMENDED: AS22 GROUP LEAD DATE:

DESIGNED M. DEY
DRAWN J. FLETCHER
CHECKED S. WASILEFSKY
APPROVAL RECOMMENDED: AS22 SUPPORT A/E
KAYA Associates,Inc.

SCALE: AS NOTED
SPEC. NO. FAC M5061

SIGNATURES ON INDEX SHEET INDICATE ACCEPTANCE OF THIS SHEET

REF. NO. E15 OF 17

DRAWING NO.
FAC-AA-4473-E15
SHEET 22 OF 28

MSFC-FORM 232 REV. 8-21-89-RCL

N:*DesignProjects*4473*AA-3462737*e15.dgn

DUCT BANK SCHEDULE

DUCT BANK ID	CONDUIT ID	CONDUIT SIZE IN INCH	FROM	TO	DUCT BANK ID	CONDUIT ID	CONDUIT SIZE IN INCH	FROM	TO	DUCT BANK ID	CONDUIT ID	CONFIGURATION	DUCT BANK ID	CONDUIT ID	CONFIGURATION
B1	B1-1 B1-2 B1-3	2 2 3	BREAKER # 23-12-1	CONTROL HOUSE	C1	C1-1 C1-2 C1-3	2 2 3	CPT #1	CONTROL HOUSE	X1	B3-1 B5-1 B3-2 B5-2 B3-3 B5-3	B3 + B5	Y1	B7-1 B2-1 B8-1 B7-2 B2-2 B8-2 B7-3 B2-3 B8-3	B7 + B2 + B8
B2	B2-1 B2-2 B2-3	2 2 3	BREAKER # 23-12-2	CONTROL HOUSE	C2	C2-1 C2-2 C2-3	2 2 3	CPT #2	CONTROL HOUSE	X2	B1-1 B6-1 B1-2 B6-2 B1-3 B6-3	B1 + B6	Y2	B4-1 B9-1 B4-2 B9-2 B4-3 B9-3	B4 + B9
B3	B3-1 B3-2 B3-3	2 2 3	BREAKER # 23-12-3	CONTROL HOUSE	R1	R1-1 R1-2 R1-3	2 2 3	REGULATOR # 1	CONTROL HOUSE	X3	B3-1 B5-1 B1-1 B6-1 B3-2 B5-2 B1-2 B6-2 B3-3 B5-3 B1-3 B6-3	X1 + X2	Y3	B7-1 B2-1 B8-1 B4-1 B9-1 B7-2 B2-2 B8-2 B4-2 B9-2 B7-3 B2-3 B8-3 B4-3 B9-3	Y1 + Y2
B4	B4-1 B4-2 B4-3	2 2 3	BREAKER # 23-12-4	CONTROL HOUSE	R2	R2-1 R2-2 R2-3	2 2 3	REGULATOR # 2	CONTROL HOUSE	X4	B3-1 B5-1 B1-1 B6-1 C1-1 B3-2 B5-2 B1-2 B6-2 C1-2 B3-3 B5-3 B1-3 B6-3 C1-3	X3 + C1	Y4	C2-1 B7-1 B2-1 B8-1 B4-1 B9-1 C2-2 B7-2 B2-2 B8-2 B4-2 B9-2 C2-3 B7-3 B2-3 B8-3 B4-3 B9-3	C2 + Y3
B5	B5-1 B5-2 B5-3	2 2 3	BREAKER # 23-12-5	CONTROL HOUSE	T1	T1-1 T1-4 T1-2 T1-5 T1-3 T1-6	2 2 3	TRANSFORMER # 1	CONTROL HOUSE	X5	B3-1 B5-1 B1-1 B6-1 C1-1 R1-1 B3-2 B5-2 B1-2 B6-2 C1-2 R1-2 B3-3 B5-3 B1-3 B6-3 C1-3 R1-3	X4 + R1	Y5	R2-1 C2-1 B7-1 B2-1 B8-1 B4-1 B9-1 R2-2 C2-2 B7-2 B2-2 B8-2 B4-2 B9-2 R2-3 C2-3 B7-3 B2-3 B8-3 B4-3 B9-3	R2 + Y4
B6	B6-1 B6-2 B6-3	2 2 3	BREAKER # 23-12-6	CONTROL HOUSE	T2	T2-1 T2-4 T2-2 T2-5 T2-3 T2-6	2 2 3	TRANSROMER # 2	CONTROL HOUSE	X6	B3-1 B5-1 B1-1 B6-1 C1-1 R1-1 T1-1 T1-4 B3-2 B5-2 B1-2 B6-2 C1-2 R1-2 T1-2 T1-5 B3-3 B5-3 B1-3 B6-3 C1-3 R1-3 T1-3 T1-6	X5 + T1	Y6	T2-1 T2-4 R2-1 C2-1 B7-1 B2-1 B8-1 B4-1 B9-1 T2-2 T2-5 R2-2 C2-2 B7-2 B2-2 B8-2 B4-2 B9-2 T2-3 T2-6 R2-3 C2-3 B7-3 B2-3 B8-3 B4-3 B9-3	T2 + Y5
B7	B7-1 B7-2 B7-3	2 2 3	BREAKER # 23-12-7	CONTROL HOUSE	F1	F1-1 F1-2 F1-3	2 2 3	FAULT INTERRUPTER # 1	CONTROL HOUSE	X7	B3-1 B5-1 B1-1 B6-1 C1-1 R1-1 T1-1 T1-4 F1-1 B3-2 B5-2 B1-2 B6-2 C1-2 R1-2 T1-2 T1-5 F1-2 B3-3 B5-3 B1-3 B6-3 C1-3 R1-3 T1-3 T1-6 F1-3	X6 + F1	Y7	F2-1 T2-1 T2-4 R2-1 C2-1 B7-1 B2-1 B8-1 B4-1 B9-1 F2-2 T2-2 T2-5 R2-2 C2-2 B7-2 B2-2 B8-2 B4-2 B9-2 F2-3 T2-3 T2-6 R2-3 C2-3 B7-3 B2-3 B8-3 B4-3 B9-3	F2 + Y6
B8	B8-1 B8-2 B8-3	2 2 3	BREAKER # 23-12-8	CONTROL HOUSE	F2	F2-1 F2-2 F2-3	2 2 3	FAULT INTERRUPTER #2	CONTROL HOUSE	X8	L1-1 B3-1 B5-1 B1-1 B6-1 C1-1 R1-1 T1-1 T1-4 F1-1 L1-2 B3-2 B5-2 B1-2 B6-2 C1-2 R1-2 T1-2 T1-5 F1-2 L1-3 B3-3 B5-3 B1-3 B6-3 C1-3 R1-3 T1-3 T1-6 F1-3	L1+ X7	Y8	F2-1 T2-1 T2-4 R2-1 C2-1 B7-1 B2-1 B8-1 B4-1 B9-1 L3-1 F2-2 T2-2 T2-5 R2-2 C2-2 B7-2 B2-2 B8-2 B4-2 B9-2 L3-2 F2-3 T2-3 T2-6 R2-3 C2-3 B7-3 B2-3 B8-3 B4-3 B9-3 L3-3	Y7 + L3
B9	B9-1 B9-2 B9-3	2 2 3	BREAKER # 23-12-9	CONTROL HOUSE	L1	L1-1 L1-2 L1-3	2 2 3	LOAD BREK SWITCH # 1	CONTROL HOUSE	X9	L1-1 B3-1 B5-1 B1-1 B6-1 C1-1 R1-1 T1-1 T1-4 F1-1 L2-2 L1-2 B3-2 B5-2 B1-2 B6-2 C1-2 R1-2 T1-2 T1-5 F1-2 L2-2 L1-3 B3-3 B5-3 B1-3 B6-3 C1-3 R1-3 T1-3 T1-6 F1-3 L2-2	X8 + L2			
					L2	L2-2 L2-2 L2-2	2 2 3	LOAD BREAK SWITCH # 2	CONTROL HOUSE						
					L3	L3-1 L3-2 L3-3	2 2 3	LOAD BREAK SWITCH # 3	CONTROL HOUSE						

PRELIMINARY CADD DWG.

CHANGES TO THIS DRAWING SHALL BE MADE ON CADD ONLY.

3462737 09-11-13 LATEST CADD UPDATE: 10-28-14 1:30 PM BY: FLETCHER

DUCT BANK CONFIGURATION

NOT TO SCALE

REV.	BY	DATE	REVISION	C.I. NO.	APPROVED

Marshall Space Flight Center
Huntsville, Alabama 35812

WORK REQUEST NO. 3462737

BUILDING 4473

REVITALIZE CENTRAL CHILLED WATER FACILITY - ELECTRICAL

DUCT BANK CONFIGURATION

AE FIRM: KAYA Associates, Inc.

NASA AE CONTRACT NO. NAS8- NNM11AA39C

SUBMITTED: JUERGEN HAUKOHL

APPROVAL RECOMMENDED: AS22 PROJECT A/E

APPROVED:

AE: DATE:

APPROVAL RECOMMENDED: AS22 SUPPORT A/E

AS22 GROUP LEAD DATE:

DESIGNED M. DEY
DRAWN J. FLETCHER
CHECKED S. WASILEFSKY

APPROVAL RECOMMENDED: KAYA Associates,Inc.

SCALE: AS NOTED

SPEC. NO. FAC M5061

DRAWING NO. FAC-AA-4473-E16

SHEET 23 OF 28

SIGNATURES ON INDEX SHEET INDICATE ACCEPTANCE OF THIS SHEET

REF. NO. E16 OF 17

MSFC-FORM 232 REV. 8-21-89-RCL

N:*DesignProjects*4473*AA-3462737*e16.dgn

CONDUIT SCHEDULE											
CONDUIT ID	SIZE IN INCH	FROM	TO	ROUTING THROUGH DUCT BANKS	CABLES	CONDUIT ID	SIZE IN INCH	FROM	TO	ROUTING THROUGH DUCT BANK	CABLES
B1-1	2	BREAKER #1	CONTROL HOUSE	B1-X2-X3-X4-X5-X6-X7-X8-X9	1-4C # 10	R1-1	2	REGULATOR #1	CONTROL HOUSE	R1-X5-X6-X7-X8-X9	1 PAIR 200µ FIBER ST
B1-2	2	BREAKER #1	CONTROL HOUSE	B1-X2-X3-X4-X5-X6-X7-X8-X9	1 PAIR 200µ FIBER ST	R1-2	2	REGULATOR #1	CONTROL HOUSE	R1-X5-X6-X7-X8-X9	SPARE
B1-3	3	BREAKER #1	CONTROL HOUSE	B1-X2-X3-X4-X5-X6-X7-X8-X9	1- 10C #10, 2-4C #10	R1-3	3	REGULATOR #1	CONTROL HOUSE	R1-X5-X6-X7-X8-X9	SPARE
B2-1	2	BREAKER #2	CONTROL HOUSE	B2-Y1-Y3-Y4-Y5-Y6-Y7-Y8	1-10C # 10	R2-1	2	REGULATOR #2	CONTROL HOUSE	R2-Y5-Y6-Y7-Y8	1 PAIR 200µ FIBER ST
B2-2	2	BREAKER #2	CONTROL HOUSE	B2-Y1-Y3-Y4-Y5-Y6-Y7-Y8	1 PAIR 200µ FIBER ST	R2-2	2	REGULATOR #2	CONTROL HOUSE	R2-Y5-Y6-Y7-Y8	SPARE
B2-3	3	BREAKER #2	CONTROL HOUSE	B2-Y1-Y3-Y4-Y5-Y6-Y7-Y8	1- 10C #10, 2-4C #10	R2-3	3	REGULATOR #2	CONTROL HOUSE	R2-Y5-Y6-Y7-Y8	SPARE
B3-1	2	BREAKER #3	CONTROL HOUSE	B3-X1-X3-X4-X5-X6-X7-X8-X9	1-4C # 10	T1-1	2	TRANSFORMER #1	CONTROL HOUSE	T1-X6-X7-X8-X9	1 PAIR 200µ FIBER ST
B3-2	2	BREAKER #3	CONTROL HOUSE	B3-X1-X3-X4-X5-X6-X7-X8-X9	1 PAIR 200µ FIBER ST	T1-2	2	TRANSFORMER #1	CONTROL HOUSE	T1-X6-X7-X8-X9	3-4C #10
B3-3	3	BREAKER #3	CONTROL HOUSE	B3-X1-X3-X4-X5-X6-X7-X8-X9	1- 10C #10, 2-4C #10	T1-3	3	TRANSFORMER #1	CONTROL HOUSE	T1-X6-X7-X8-X9	2-4C #10
B4-1	2	BREAKER #4	CONTROL HOUSE	B4-Y2-Y3-Y4-Y5-Y6-Y7-Y8	1-4C # 10	T1-4	2	TRANSFORMER #1	CONTROL HOUSE	T1-X6-X7-X8-X9	3- 4C #10
B4-2	2	BREAKER #4	CONTROL HOUSE	B4-Y2-Y3-Y4-Y5-Y6-Y7-Y8	1 PAIR 200µ FIBER ST	T1-5	2	TRANSFORMER #1	CONTROL HOUSE	T1-X6-X7-X8-X9	SPARE
B4-3	3	BREAKER #4	CONTROL HOUSE	B4-Y2-Y3-Y4-Y5-Y6-Y7-Y8	1- 10C #10, 2-4C #10	T1-6	3	TRANSFORMER #1	CONTROL HOUSE	T1-X6-X7-X8-X9	SPARE
B5-1	2	BREAKER #5	CONTROL HOUSE	B5-X1-X3-X4-X5-X6-X7-X8-X9	1-4C # 10	T2-1	2	TRANSFORMER #2	CONTROL HOUSE	T2-Y6-Y7-Y8	1 PAIR 200µ FIBER ST
B5-2	2	BREAKER #5	CONTROL HOUSE	B5-X1-X3-X4-X5-X6-X7-X8-X9	1 PAIR 200µ FIBER ST	T2-2	2	TRANSFORMER #2	CONTROL HOUSE	T2-Y6-Y7-Y8	3-4C #10
B5-3	3	BREAKER #5	CONTROL HOUSE	B5-X1-X3-X4-X5-X6-X7-X8-X9	1- 10C #10, 2-4C #10	T2-3	3	TRANSFORMER #2	CONTROL HOUSE	T2-Y6-Y7-Y8	2-4C #10
B6-1	2	BREAKER #6	CONTROL HOUSE	B6-X2-X3-X4-X5-X6-X7-X8-X9	1-4C # 10	T2-4	2	TRANSFORMER #2	CONTROL HOUSE	T2-Y6-Y7-Y8	3- 4C #10
B6-2	2	BREAKER #6	CONTROL HOUSE	B6-X2-X3-X4-X5-X6-X7-X8-X9	1 PAIR 200µ FIBER ST	T2-5	2	TRANSFORMER #2	CONTROL HOUSE	T2-Y6-Y7-Y8	SPARE
B6-3	3	BREAKER #6	CONTROL HOUSE	B6-X2-X3-X4-X5-X6-X7-X8-X9	1- 10C #10, 2-4C #10	T2-6	3	TRANSFORMER #2	CONTROL HOUSE	T2-Y6-Y7-Y8	SPARE
B7-1	2	BREAKER #7	CONTROL HOUSE	B7-Y1-Y3-Y4-Y5-Y6-Y7-Y8	3-4C # 10	F1-1	2	FAULT INTERRUPTER #1	CONTROL HOUSE	F1-X7-X8-X9	1 PAIR 200µ FIBER ST
B7-2	2	BREAKER #7	CONTROL HOUSE	B7-Y1-Y3-Y4-Y5-Y6-Y7-Y8	1 PAIR 200µ FIBER ST	F1-2	2	FAULT INTERRUPTER #1	CONTROL HOUSE	F1-X7-X8-X9	1-4C # 10
B7-3	3	BREAKER #7	CONTROL HOUSE	B7-Y1-Y3-Y4-Y5-Y6-Y7-Y8	1- 10C #10, 2-4C #10	F1-3	3	FAULT INTERRUPTER #1	CONTROL HOUSE	F1-X7-X8-X9	1- 10C #10, 2-4C #10
B8-1	2	BREAKER #8	CONTROL HOUSE	B8-Y1-Y3-Y4-Y5-Y6-Y7-Y8	1-4C # 10	F2-1	2	FAULT INTERRUPTER #2	CONTROL HOUSE	F2-Y7-Y8	1 PAIR 200µ FIBER ST
B8-2	2	BREAKER #8	CONTROL HOUSE	B8-Y1-Y3-Y4-Y5-Y6-Y7-Y8	1 PAIR 200µ FIBER ST	F2-2	2	FAULT INTERRUPTER #2	CONTROL HOUSE	F2-Y7-Y8	1-4C # 10
B8-3	3	BREAKER #8	CONTROL HOUSE	B8-Y1-Y3-Y4-Y5-Y6-Y7-Y8	1- 10C #10, 2-4C #10	F2-3	3	FAULT INTERRUPTER #2	CONTROL HOUSE	F2-Y7-Y8	1- 10C #10, 2-4C #10
B9-1	2	BREAKER #9	CONTROL HOUSE	B9-Y2-Y3-Y4-Y5-Y6-Y7-Y8	1-10C # 10	L1-1	2	LOAD BREAK SWITCH # 1	CONTROL HOUSE	L1-X8-X9	1 PAIR 200µ FIBER ST
B9-2	2	BREAKER #9	CONTROL HOUSE	B9-Y2-Y3-Y4-Y5-Y6-Y7-Y8	1 PAIR 200µ FIBER ST	L1-2	2	LOAD BREAK SWITCH # 1	CONTROL HOUSE	L1-X8-X9	1-4C # 10
B9-3	3	BREAKER #9	CONTROL HOUSE	B9-Y2-Y3-Y4-Y5-Y6-Y7-Y8	1- 10C #10, 2-4C #10	L1-3	3	LOAD BREAK SWITCH # 1	CONTROL HOUSE	L1-X8-X9	1- 10C #10, 2-4C #10
C1-1	2	CPT #1	CONTROL HOUSE	C1-X4-X5-X6-X7-X8-X9	1-3C #2 & #6(G)	L2-1	2	LOAD BREAK SWITCH # 2	CONTROL HOUSE	L2-X9	1 PAIR 200µ FIBER ST
C1-2	2	CPT #1	CONTROL HOUSE	C1-X4-X5-X6-X7-X8-X9	2-4C # 10	L2-2	2	LOAD BREAK SWITCH #2	CONTROL HOUSE	L2-X9	1-4C # 10
C1-3	3	CPT #1	CONTROL HOUSE	C1-X4-X5-X6-X7-X8-X9	SPARE	L2-3	3	LOAD BREAK SWITCH #2	CONTROL HOUSE	L2-X9	1- 10C #10, 2-4C #10
C2-1	2	CPT #2	CONTROL HOUSE	C2-Y4-Y5-Y6-Y7-Y8	1-3C #2 & #6(G)	L3-1	2	LOAD BREAK SWITCH #3	CONTROL HOUSE	L3-Y8	1 PAIR 200µ FIBER ST
C2-2	2	CPT #2	CONTROL HOUSE	C2-Y4-Y5-Y6-Y7-Y8	2-4C # 10	L3-2	2	LOAD BREAK SWITCH #3	CONTROL HOUSE	L3-Y8	1-4C # 10
C2-3	3	CPT #2	CONTROL HOUSE	C2-Y4-Y5-Y6-Y7-Y8	SPARE	L3-3	3	LOAD BREAK SWITCH #3	CONTROL HOUSE	L3-Y8	1- 10C #10, 2-4C #10

NOTES:

1. ALL CONDUITS SHALL BE IDENTIFIED WITH ID NUMBERS AT BOTH ENDS.
2. PROVIDE LABELS ON ALL CABLES WITH INDIVIDUAL IDENTIFCATION NUMBERS AT BOTH ENDS. COORDINATE WITH ARMY FOR DETAILS.
3. PROVIDE LABELS ON ALL WIRES INDICATING TERMINAL NUMBERS AT BOTH ENDS. COORDINATE WITH ARMY FOR DETAILS.
4. PROVIDE PULL STRINGS ON ALL CONDUITS (SPARES AND USED).

CONDUIT SCHEDULE

NOT TO SCALE

PRELIMINARY CADD DWG.
CHANGES TO THIS DRAWING SHALL BE MADE ON CADD ONLY.
3462737 09-11-13
LATEST CADD UPDATE: 11-13-14 9:00 AM
BY: FLETCHER

REV.	BY	DATE	REVISION	C.I. NO.	APPROVED

Marshall Space Flight Center
Huntsville, Alabama 35812

WORK REQUEST NO. 3462737

BUILDING 4473

REVITALIZE CENTRAL CHILLED WATER FACILITY - ELECTRICAL
CONDUIT SCHEDULE

AE FIRM: KAYA Associates, Inc.
NASA AE CONTRACT NO. NASS- NNM11AA39C

SUBMITTED: JUERGEN HAUKOHL
APPROVAL RECOMMENDED: AS22 PROJECT A/E
APPROVED:
AE: DATE:
APPROVAL RECOMMENDED: AS22 SUPPORT A/E
AS22 GROUP LEAD DATE:
DESIGNED M. DEY
DRAWN J. FLETCHER
CHECKED S. WASILEFSKY
APPROVAL RECOMMENDED: KAYA Associates,Inc.
SCALE: AS NOTED
SPEC. NO. FAC M5061

SIGNATURES ON INDEX SHEET INDICATE ACCEPTANCE OF THIS SHEET

REF. NO. E17 OF 17

DRAWING NO. FAC-AA-4473-E17
SHEET 24 OF 28

MSFC-FORM 232 REV. 8-21-89-RCL

N:*DesignProjects*4473*AA-3462737*e17.dgn

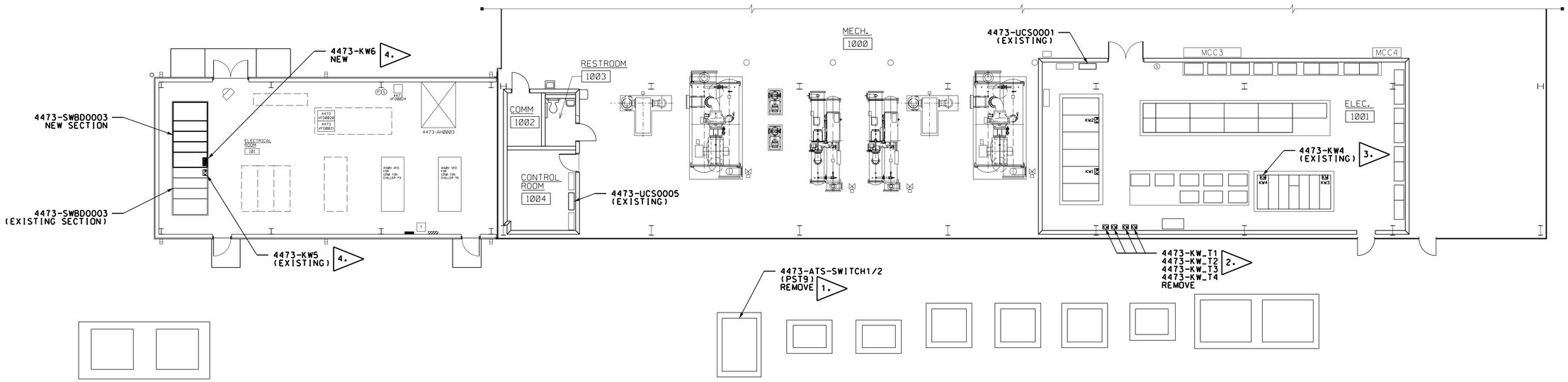

BUILDING 4473
PARTIAL UCS FLOOR PLAN
SCALE: 1/8" = 1'-0"
0 4' 8' 12'

UCS GENERAL NOTES:

1. ALL ELECTRICAL WORK SHALL COMPLY WITH 2014 NATIONAL ELECTRICAL CODE AND SPEC. NO. FAC-M5061 AS MINIMUM STANDARDS. ITEMS SPECIFIED BY BRAND NAME AND PART NUMBER SHALL NOT BE SUBSTITUTED SO THAT CONTINUOUS SYSTEM COMPATIBILITY IS ASSURED.
2. SENSOR CABLE SHALL BE 2 OR 4 CONDUCTOR AS SHOWN, COPPER, POLYMER ALLOY INSULATED, TWISTED PAIRS, PLENUM RATED, EACH PAIR HAVING A 24 AWG STRANDED DRAIN WIRE.
   1 PAIR COLOR CODE: BLACK/RED 22 GA. (7X30) WEST PENN WIRE PN 25291B, OR APPROVED EQUAL.
   2 PAIR COLOR CODE: BLACK/RED WHITE/GREEN 22 GA. (7X30) WEST PENN WIRE PN 25510B, OR APPROVED EQUAL.
3. DATA CABLE SHALL BE 2 CONDUCTOR, COPPER, FOAM TEFLON INSULATION, TWISTED PAIR, PLENUM RATED, PAIR COLOR CODE: WHITE/BLUE 24AWG (7 X 32) WITH STRANDED DRAIN WIRE. WEST PENN D254851, BELDEN PN 82841, OR APPROVED EQUAL.
4. 24VDC POWER SUPPLY CABLE SHALL BE 2 CONDUCTOR, POLYMER ALLOY INSULATION, PLENUM RATED, 1 PAIR COLOR CODE: RED/BLACK 16 AWG. WEST PENN P/N 25225B, OR APPROVED EQUAL.
5. THE CONTRACTOR SHALL FURNISH ALL PARTS NECESSARY FOR A COMPLETE INSTALLATION.
6. MICROSCAN PRODUCTS ARE AVAILABLE FROM DORSETT TECHNOLOGIES, PH# 336-679-2126.
7. CONDUIT PENETRATIONS AT THE UCS PANEL(S) SHALL BE IN THE BOTTOM.
8. A MAXIMUM OF 5 SHIELD/DRAIN WIRES SHALL BE TERMINATED AT EACH GROUND BAR POSITION. SHIELD/DRAIN WIRES ARE NOT TO EXTEND IN TO THE I/O PANEL.
9. UPON COMPLETION OF ALL UCS RELATED WORK, A POINT TO POINT CHECKOUT SHALL BE CONDUCTED JOINTLY BY UCS PERSONNEL AND THE CONTRACTOR.
10. THE CONTRACTOR SHALL PROVIDE PROGRAMMING OF THE NEW UCS MONITORING POINTS TO THE INFOSCAN DATABASE TO ENABLE A COMPLETELY OPERATIONAL SYSTEM.
11. SEE ELECTRICAL AND CIVIL SECTIONS FOR RELATED EQUIPMENT LOCATIONS.
12. INSTALL NEW UCS SENSOR, 24VAC POWER AND/OR DATA CABLE TO ALL NEW AND REPLACED FIELD DEVICES. SPLICING OF WIRING WILL NOT BE PERMITTED.
13. THE CONTRACTOR SHALL COORDINATE ALL PHASES OF WORK CLOSELY WITH THE COR AND UCS CONTRACTOR.

UCS DEMOLITION NOTES:

D1. THE CONTRACTOR SHALL COORDINATE ALL PHASES OF DEMOLITION WORK CLOSELY WITH THE COR AND UCS CONTRACTOR.

D2. THE CONTRACTOR SHALL COORDINATE THE REMOVAL OF EXISTING UCS MONITORING POINTS FROM THE INFOSCAN DATABASE WITH THE UCS CONTRACTOR.

D3. THE CONTRACTOR SHALL RETURN REMOVED UCS PANEL COMPONENTS TO UCS VIA THE COR TO INCLUDE X-TALKS, MODEMS, AND I/O CARDS.

D4. THE EXTENT OF DEMOLITION FOR ITEMS IDENTIFIED AS TO BE REMOVED SHALL INCLUDE ANY ASSOCIATED AUXILIARY ACCESSORIES, ABANDONED WIRING, CONDUIT AND CONDUIT SUPPORTS UNLESS OTHERWISE NOTED.

D5. WHERE CONDUIT AND DEVICES ARE REMOVED FROM WALLS, REPAIR AND REPAINT TO MATCH EXISTING WALL FINISH.

UCS FLAG NOTES:

1. REMOVE EXISTING UCS FIELD DEVICE, I/O POINT, WIRING AND ABANDONED CONDUIT BACK TO 4473-UCS0005 PER UCS DEMO WIRING DETAILS. SEE SHEET E5 SITE PLAN.
2. DEMOLISH EXISTING KW METERS KW_T1, KW_T2, KW_T3 AND KW_T4 TO INCLUDE ALL CT AND PT WIRING AND CONDUIT BACK TO SOURCE. REMOVE UCS DATA CABLE AND CONDUIT BACK TO 4473-UCS0001 PER UCS COMM TRUNK DEMO LAYOUT.
3. PROVIDE NEW UCS DATA CABLE TO EXISTING 4473-UCS0001 PER NEW UCS COMM TRUNK LAYOUT.
4. PROVIDE NEW UCS DATA CABLE TO EXISTING 4473-UCS0005 PER NEW UCS COMM TRUNK LAYOUT.

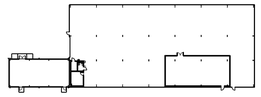

BUILDING 4473
KEY PLAN
NOT TO SCALE

WARNING
DO NOT SCALE THIS DRAWING
THIS DRAWING WAS DESIGNED TO BE PRINTED AT A NASA SHEET SIZE: MSFC STD. SIZE 40" X 28"

PRELIMINARY CADD DWG.
CHANGES TO THIS DRAWING SHALL BE MADE ON CADD ONLY.
08-26-14 DGB
LATEST CADD UPDATE: 11-07-14 5:00 PM
BY: DUSTIN BORDER

REV.	BY	DATE	REVISION	C.I. NO.	APPROVED

Marshall Space Flight Center
Huntsville, Alabama 35812

WORK REQUEST NO. 3462737

BUILDING 4473
REVITALIZE CENTRAL CHILLED WATER FACILITY-ELECTRICAL
UCS NOTES AND BLDG 4473 FLOOR PLAN

AE FIRM: KAYA Associates, Inc.
NASA AE CONTRACT NO. NAS8- NNM11AA39C

SUBMITTED: JUERGEN HAUKOHL
APPROVAL RECOMMENDED: AS22 PROJECT A/E
APPROVED:
AE: DATE:
APPROVAL RECOMMENDED: AS22 SUPPORT A/E
AS22 GROUP LEAD DATE:
DESIGNED D. BORDER
DRAWN D. BORDER
CHECKED J. PAGE
APPROVAL RECOMMENDED: KAYA Associates,Inc.
SCALE: AS NOTED
SPEC. NO. FAC M5061

SIGNATURES ON INDEX SHEET INDICATE ACCEPTANCE OF THIS SHEET
REF. NO. UCS1 OF 4

DRAWING NO. FAC-AA-4473-UCS1
SHEET 25 OF 28

MSFC-FORM 232 REV. 8-21-89-REL

N:*DesignProjects*4473*AA-3462737*UCS1.dgn

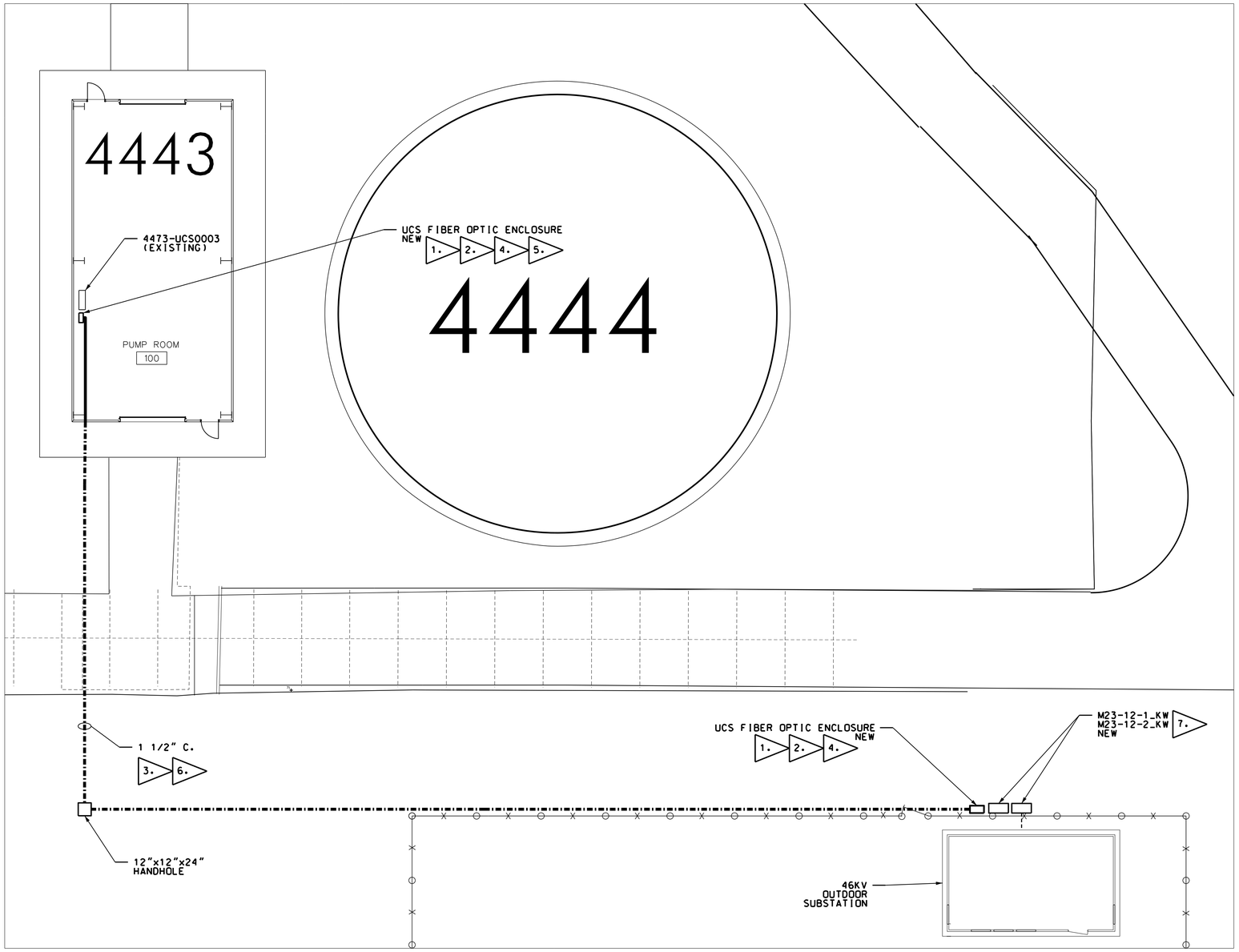

BUILDING 4443
UCS SITE PLAN
SCALE: 1/8" = 1'-0"

0 4' 8' 12'

UCS FLAG NOTES:

1. PROVIDE NEW 16" X 12" X 6" ALUMINUM, NEMA 4X, CONTINUOUS HINGE ENCLOSURE WITH BACKPLATE, EQUAL TO HOFFMAN P/N A16H1206ALLP/A16P12. MOUNT ENCLOSURES AT LOCATIONS SHOWN.
2. PROVIDE NEW FOSTCDRI-INV SERIAL TO FIBER OPTIC CONVERTER AND NEW MDR-40-24 POWER SUPPLY TO NEW ENCLOSURES SPECIFIED IN UCS NOTE 1. PRODUCTS AVAILABLE FROM B&B ELECTRONICS PH# 815-433-5100. SEE SHEET UCS4 FOR FIBER OPTIC DETAILS.
3. PROVIDE NEW 1½" CONDUIT FOR FIBER OPTIC CABLE FROM UCS FIBER OPTIC ENCLOSURE IN BLDG 4443, ROOM 100 TO FIBER OPTIC ENCLOSURE AT NEW SUB STATION KW METERS. UTILIZE DUCT BANK PROVIDED BY ELECTRICAL. SEE SHEET E5. ALL UNDERGROUND CONDUIT SHALL BE PVC ENCASED IN CONCRETE. ALL BELOW GRADE SWEEPS AND BENDS SHALL BE PVC COATED RIGID STEEL CONDUIT. ALL ABOVE GRADE CONDUIT IN OUTDOOR LOCATIONS SHALL BE RIGID STEEL CONDUIT. ALL CONDUIT INSIDE OF BUILDINGS SHALL BE E.M.T.. USE OF CONDULETS WILL NOT BE PERMITTED FOR THE FIBER OPTIC CONDUIT. USE NEMA APPROVED 12" X 12" X 8" PULL BOXES FOR TRANSITIONS. CONDUIT ROUTES ARE DIAGRAMMATIC AND DO NOT REFLECT ALL OFFSETS, BENDS, FITTINGS, PULL BOXES, ETC.. COORDINATE WITH CONDITIONS IN THE FIELD.
4. PROVIDE NEW MULTIMODE 62.5/125 MICRO-METER, SINGLE JACKET, ALL DIELECTRIC, LOOSE TUBE, INDOOR/OUTDOOR PLENUM RATED FIBER OPTIC CABLE WITH A MINIMUM OF 2 STRANDS EQUAL TO BELDEN PART # B9B202. INSTALLATION SHALL BE FROM FIBER OPTIC CONVERTER IN BLDG 4443, ROOM 100 TO FIBER OPTIC CONVERTER AT NEW SUB STATION KW METERS. PROVIDE "ST" TYPE CONNECTORS WITH STRAIN RELIEF AND DUST CAPS.
5. USE THE 4473-UCS0003 120 VAC DEDICATED CIRCUIT FOR PRIMARY POWER TO THE POWER SUPPLY UNIT.
6. PROVIDE PULL TAPE/RIBBON IN UNDERGROUND CONDUIT FOR FUTURE USE.
7. PROVIDE NEW UCS DATA CABLE PER NEW UCS COMM TRUNK LAYOUT.

WARNING

DO NOT SCALE THIS DRAWING

THIS DRAWING WAS DESIGNED TO BE PRINTED AT A NASA SHEET SIZE: MSFC STD. SIZE 40" X 28"

PRELIMINARY CADD DWG.

CHANGES TO THIS DRAWING SHALL BE MADE ON CADD ONLY.

08-26-14 DGB — LATEST CADD UPDATE: 11-07-14 5:00 PM BY: DUSTIN BORDER

REV.	BY	DATE	REVISION	C.I. NO.	APPROVED

Marshall Space Flight Center
Huntsville, Alabama 35812

WORK REQUEST NO. 3462737

BUILDING 4473
REVITALIZE CENTRAL CHILLED WATER
FACILITY-ELECTRICAL
BLDG 4443 FLOOR PLAN

AE FIRM: KAYA Associates, Inc.

NASA AE CONTRACT NO. NAS8- NNM11AA39C

SUBMITTED: JUERGEN HAUKOHL

APPROVAL RECOMMENDED: AS22 PROJECT A/E

APPROVED:

AE: DATE:

APPROVAL RECOMMENDED: AS22 SUPPORT A/E

AS22 GROUP LEAD DATE:

DESIGNED D. BORDER
DRAWN D. BORDER
CHECKED J. PAGE

APPROVAL RECOMMENDED: KAYA Associates,Inc.

SCALE: AS NOTED

SPEC. NO. FAC M5061

DRAWING NO. FAC-AA-4473-UCS2

SHEET 26 OF 28

SIGNATURES ON INDEX SHEET INDICATE ACCEPTANCE OF THIS SHEET

REF. NO. UCS2 OF 4

MSFC-FORM 232 REV. 8-21-89-RCL

N:*DesignProjects*4473*AA-3462737*UCS2.dgn

UCS DEMO WIRING DETAILS

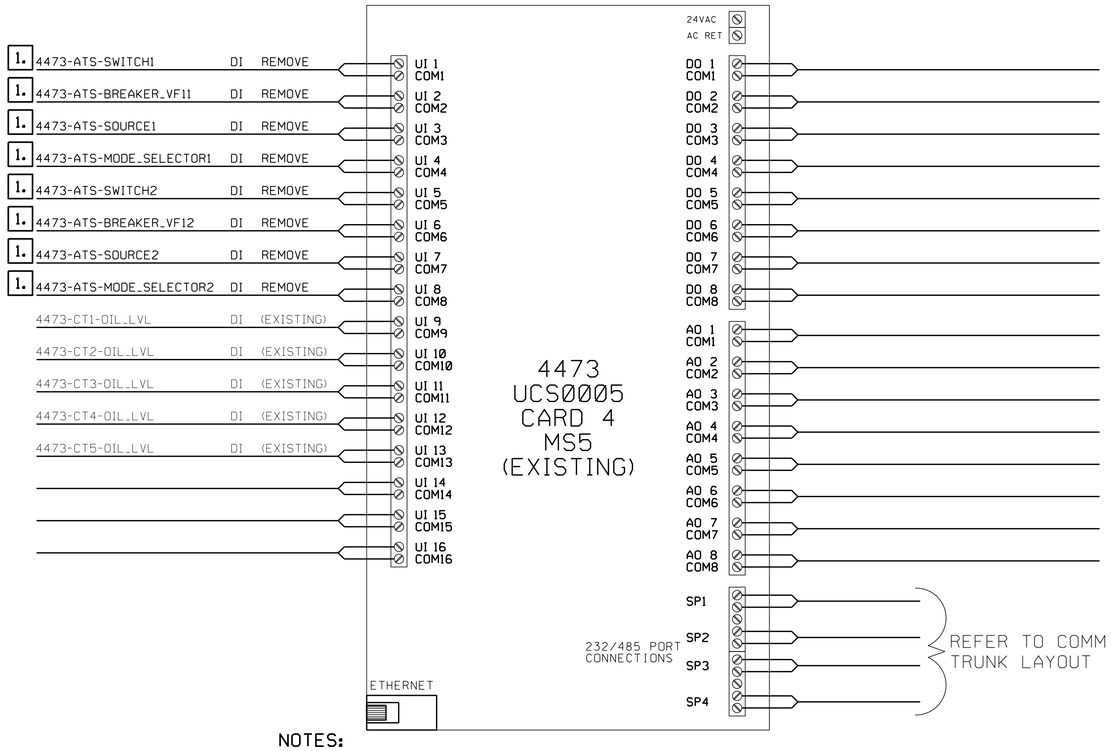

NOTES:

1. REMOVE EXISTING UCS I/O POINT, FIELD DEVICE, WIRING AND ABANDONED CONDUIT.

UCS COMM TRUNK DEMO LAYOUT

• DEMOLISH HATCHED KW METERS, DATA CABLE AND CONDUIT •

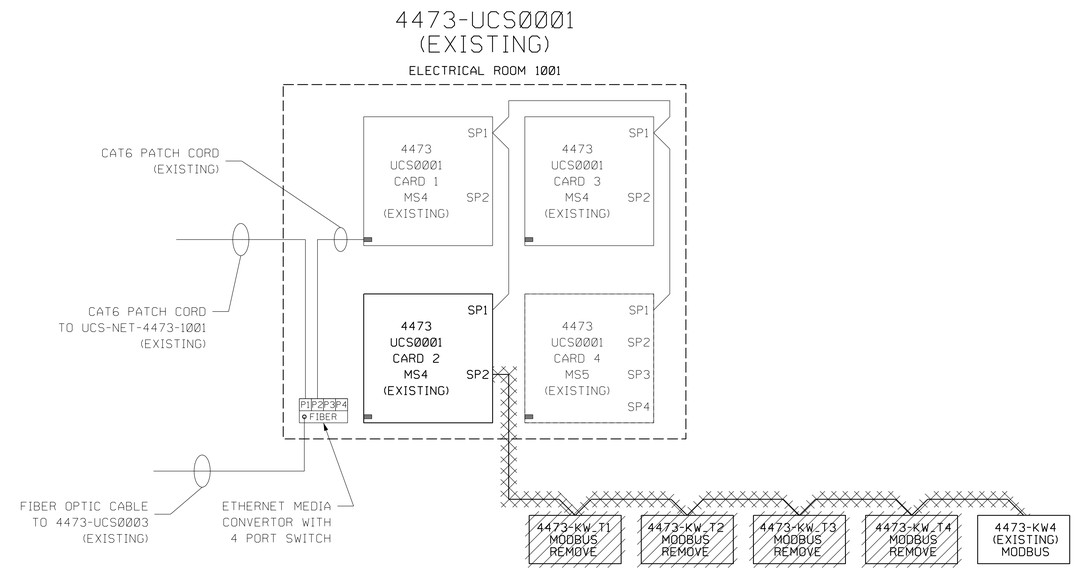

WARNING

DO NOT SCALE THIS DRAWING

THIS DRAWING WAS DESIGNED TO BE PRINTED AT A NASA SHEET SIZE: MSFC STD. SIZE 40" X 28"

PRELIMINARY CADD DWG.

CHANGES TO THIS DRAWING SHALL BE MADE ON CADD ONLY.

08-26-14 DGB

LATEST CADD UPDATE: 11-07-14 5:00 PM

BY: DUSTIN BORDER

REV.	BY	DATE	REVISION	C.I. NO.	APPROVED

Marshall Space Flight Center
Huntsville, Alabama 35812

WORK REQUEST NO. 3462737

BUILDING 4473
REVITALIZE CENTRAL CHILLED WATER FACILITY-ELECTRICAL
UCS DEMO WIRING DETAIL AND DEMO COMM TRUNK LAYOUT

AE FIRM: KAYA Associates, Inc.

NASA AE CONTRACT NO: NAS8- NNM11AA39C

SUBMITTED: JUERGEN HAUKOHL

APPROVAL RECOMMENDED: AS22 PROJECT A/E

APPROVED:

AE: DATE:

APPROVAL RECOMMENDED: AS22 SUPPORT A/E

AS22 GROUP LEAD DATE:

DESIGNED D. BORDER
DRAWN D. BORDER
CHECKED J. PAGE

APPROVAL RECOMMENDED: KAYA Associates, Inc.

SCALE: AS NOTED

SPEC. NO. FAC M5061

SIGNATURES ON INDEX SHEET INDICATE ACCEPTANCE OF THIS SHEET

REF. NO. UCS3 OF 4

DRAWING NO. FAC-AA-4473-UCS3

SHEET 27 OF 28

MSFC-FORM 232 REV. 8-21-89-RCL

N:*DesignProjects*4473*AA-3462737*UCS3.dgn

NEW UCS COMM TRUNK LAYOUT WITH FIBER OPTIC DETAIL

• PROVIDE NEW UCS DATA CABLE SHOWN IN BOLD PER UCS GENERAL NOTE 3.•

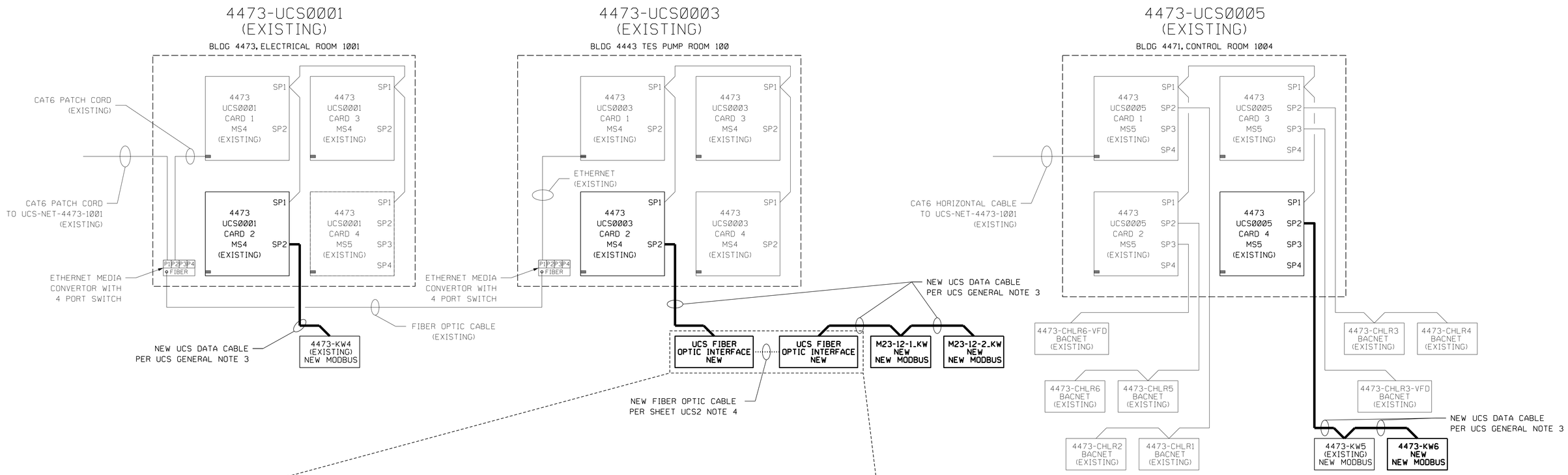

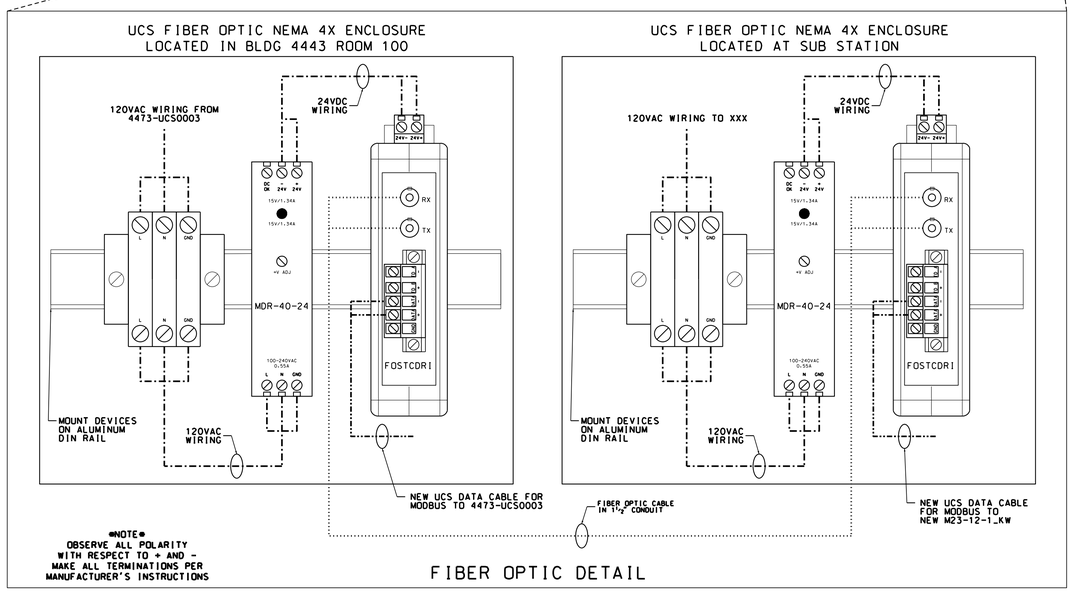

FIBER OPTIC DETAIL

WARNING

DO NOT SCALE THIS DRAWING

THIS DRAWING WAS DESIGNED TO BE PRINTED AT A NASA SHEET SIZE: MSFC STD. SIZE 40" X 28"

PRELIMINARY CADD DWG.

CHANGES TO THIS DRAWING SHALL BE MADE ON CADD ONLY.

08-26-14 DGB

LATEST CADD UPDATE: 11-07-14 5:00 PM

BY: DUSTIN BORDER

REV.	BY	DATE	REVISION	C.A. NO.	APPROVED

Marshall Space Flight Center
Huntsville, Alabama 35812

WORK REQUEST NO. 3462737

BUILDING 4473
REVITALIZE CENTRAL CHILLED WATER
FACILITY-ELECTRICAL
UCS NEW COMM TRUNK LAYOUT WITH FIBER OPTIC DETAILS

AE FIRM: KAYA Associates, Inc.

NASA AE CONTRACT NO. NAS8- NNM11AA39C

SUBMITTED: JUERGEN HAUKOHL

APPROVED:

APPROVAL RECOMMENDED: AS22 PROJECT A/E

AS22 GROUP LEAD | DATE:

AE: | DATE:

DESIGNED D. BORDER
DRAWN D. BORDER
CHECKED J. PAGE

APPROVAL RECOMMENDED: AS22 SUPPORT A/E

APPROVAL RECOMMENDED: KAYA Associates, Inc.

SCALE: AS NOTED

SPEC. NO. FAC M5061

DRAWING NO. FAC-AA-4473-UCS4

SHEET 28 OF 28

SIGNATURES ON INDEX SHEET INDICATE ACCEPTANCE OF THIS SHEET

REF. NO. UCS4 OF 4

MSFC-FORM 232 REV. 8-21-89-RCL

N:*DesignProjects*4473*AA-3462737*UCS4.dgn