DWG NO. SSCY13038-15 | SHT – | REV B

NUT, DOUBLE HEXAGON, SELF LOCKING FLANGED

REF. SPS P/N -94999-428 EXCEPT AS NOTED.

REVISIONS			
REV	DESCRIPTION	DATE	APPROVED
A	RELEASED	7/28/97	GMG
B	INCREASED NUT LENGTH & MODIFIED NOTES.	1/6/98	GMG

NOTES:

1. MATERIAL: SPS AEREX 350.™
2. FINISH: SILVER PLATE TO AMS 2411. MANUFACTURER'S OPTION TO ADD DRY FILM LUBRICANT PER AS 1701, CLASS IV TO SATISFY TORQUE REQUIREMENTS.
3. FLUORESCENT PENETRANT INSPECTION 100% PER ASTM E 1417. ACCEPTANCE CRITERIA PER SPS-I-700. LEVEL II.
4. SQUARENESS: WHEN CHECKED AT A POINT BETWEEN THE I.D. AND O.D. OF THE BEARING SURFACE.
5. FLATNESS TO BE CHECKED IN ACCORDANCE WITH SPS-G-1013.
6. PERFORMANCE PER SPEC. AS 7253 WITH THE FOLLOWING MODIFICATIONS TO THE TEST PROCEDURE:
   A) TEST BOLT AND MANDRELS SHALL CONFORM TO SPS-B-93692.
   B) AXIAL STRENGTH OF 8000 LBS. MIN. BASED ON 220 KSI AND TENSILE STRESS AREA.
   C) THE WRENCH TORQUE TEST SHALL BE PERFORMED FOR 5 CYCLES ONLY USING A 525 IN-LB TORQUE.
   D) PERMANENT SET TEST SHALL BE CONDUCTED WITH NEW NUTS ON MAX. & MIN. MANDRELS.
   E) THE ROOM TEMP. REUSABILITY TEST SHALL BE PERFORMED FOR 5 CYCLES ONLY.
   F) THE CONDITIONED NUT REUSABILITY TEST SHALL BE PERFORMED WITH A CONDITIONING TEMPERATURE OF 1350° F ± 15° F. BOLT ELONGATION FOR DETERMINING PRELOAD TO BE BASED ON E= 31.3 X 10E06 PSI.
   G) A SINGLE CYCLE REUSABILITY TEST SHALL BE CONDUCTED WITH A CONDITIONING TEMPERATURE OF 1350° F ±15° F FOR 100 HOURS. NUT MUST BE CAPABLE OF BEING REMOVED FROM TEST BOLT.
7. DIMENSIONS ARE IN INCHES.
8. BREAK ALL SHARP EDGES.
9. SURFACE TEXTURE: ANSI B46.1 UNLESS OTHERWISE SPECIFIED, THE SURFACE TEXTURE SHALL NOT EXCEED 125 MICROINCHES.
10. THREADS REQUIRE LUBRICATION WITH MIL-L-7808 OIL PRIOR TO INSTALLATION AND REMOVAL.

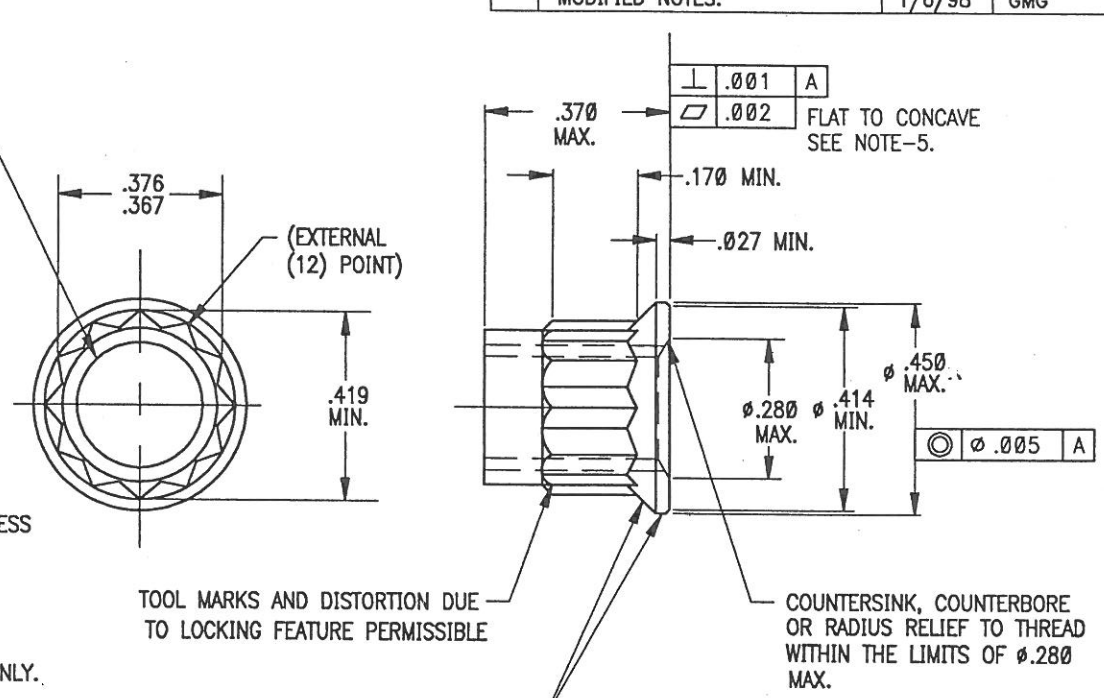

LAB HARDWARE

(6) REQ'D/ASSY

DO NOT SCALE DRAWING UNLESS OTHERWISE SPECIFIED: DIMENSIONS ARE IN INCHES BREAK EDGES: .005-.020 FILLETS: .020-.040 SURFACE FINISH ✓ MATERIAL: SEE NOTE 1	CONTRACT NO.		STEIN SEAL COMPANY WAMBOLD RD. & INDUSTRIAL BLVD., KULPSVILLE, PA. 19443-0316
	APPROVAL	DATE	TITLE HIGH SPEED TEST RIG DISK RETAINING NUT
	DRAWN JSB	7/25/97	
	CHECKED GMG	7/25/97	SIZE B · FSCM NO. 03673 · DWG. NO. SSCY13038-15 · REV B
	APPROVED ADM	7/25/97	SCALE 4/1 · SHEET –

ACAD BS4x

DWG NO. SSCY13038-17 SHT – REV B

REVISIONS			
REV	DESCRIPTION	DATE	APPROVED
A	RELEASED	7/28/97	GMG
B	4.575–4.565 WAS 4.505–4.495, 1.015–.975 WAS .945–.905 & ADDED NOTES 4 THRU 6.	1/5/98	GMG

C. .2495 .2490 change To .2540 .2535 10-20/98 EM

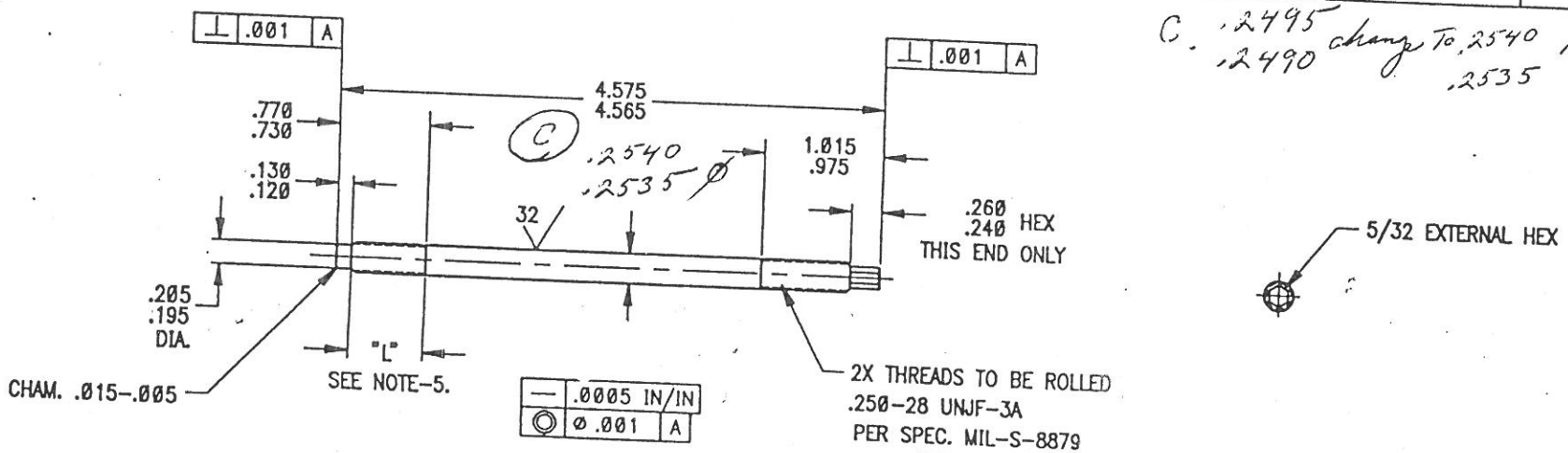

NOTES:

1. MATERIAL IS AEREX 350 ALLOY, SUPPLIED BY SPS TECHNOLOGIES. SUPPLIED FASTENERS TO MEET THE MINIMUM PROPERTY LEVELS AS SPECIFIED PER SPS-B-93692.
2. FLUORESCENT PENETRANT INSPECTION: PENETRANT INSPECT 100% PER ASTM E 1417. ACCEPTANCE CRITERIA PER SPS-I-650.
3. DIMENSIONS ARE IN INCHES.
4. SURFACE FINISH: PASSIVATE TO FED. SPEC. QQ-P-35C NOTICE 2.
5. THREADS MARKED "L": COAT WITH DRY FILM LUBRICANT PER SAE AS1701, CLASS IV.
6. THREADS TO BE LUBRICATED WITH MIL-L-7808 OIL PRIOR TO INSTALLATION AND REMOVAL.

LAB
HARDWARE
(6) REQ'D/ASSY

DO NOT SCALE DRAWING
UNLESS OTHERWISE SPECIFIED: DIMENSIONS ARE IN INCHES
BREAK EDGES: .005–.020
FILLETS: .020–.040
SURFACE FINISH 63
MATERIAL: SEE NOTE-1

CONTRACT NO.

APPROVAL		DATE
DRAWN	JSB	5/22/97
CHECKED	GMG	7/28/97
APPROVED	ADM	7/28/97

STEIN SEAL COMPANY
WAMBOLD RD. & INDUSTRIAL BLVD., KULPSVILLE, PA. 19443-0316

TITLE HIGH SPEED TEST RIG DISK RETAINING STUD

SIZE B FSCM NO. 03673 DWG. NO. SSCY13038-17 REV C

SCALE 1/1 SHEET –