# Armstrong Flight Research Center (AFRC)

# A--Unmanned Aircraft Systems Test Sites

## Pre-Proposal Conference

## RFP NND15548481R
## June 18, 2015

Armstrong Flight Research Center
FAA Test Site Operator

# Welcome to the NASA Ames Research Center

Armstrong Flight Research Center
FAA Test Site Operator

# Map of NASA Ames Research Center

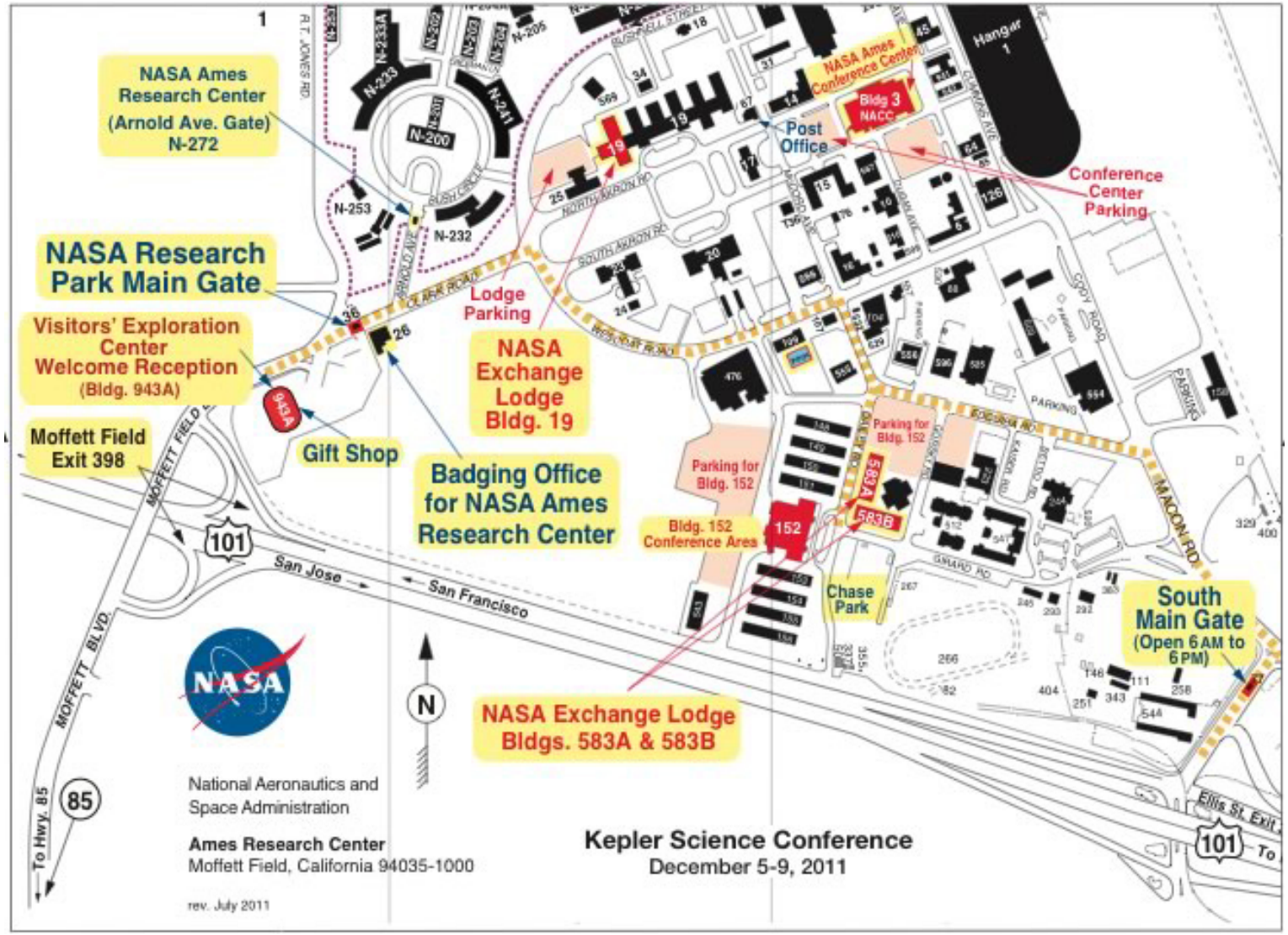


Armstrong Flight Research Center
FAA Test Site Operator

# Agenda

**June 18, 2015**

| | |
|---|---|
| 09:00 - 9:15 | Introductions |
| 09:15 - 9:45 | Request for Proposal (Rosalia Toberman) |
| 09:45 - 10:15 | LVC-DE Briefing (Jim Murphy/Neil Otto) |
| 10:15 – 11:30 | LVC-DE Tour (Jim Murphy/Neil Otto) |
| 11:30 – 12:00 | Wrap-Up and Retrieve Questions and Answers |
| 12:00 | Close Meeting |

# Safety and Security Briefing

- Emergency Exits (In the event of an emergency stay at least 75ft. away from the building)
- Use handrails when climbing stairs
- General Awareness at each site (Hangars, etc.)
- Restrooms

# Solicitation Overview

Rosalia Toberman
Contract Officer

Armstrong Flight Research Center
FAA Test Site Operator

# RFP Highlights

- Solicitation #: NND15548481R
- Anticipated Period of Performance:
  - Basic period: 5 years from award date
    - I.4 52.216-18 Ordering (Oct 1995)
    - I.5 52.216-19 Order Limitations (Oct 1995)
- Type of Contract: L.8 Indefinite Delivery Indefinite Quantity (IDIQ)
  - Task Orders: Fixed Price, Cost plus Fixed Fee or Cost No Fee
- Funding (B.1, B.2, B.3 & H.7)
  - Determined at the Task Order Level

# Overview

## Read the solicitation carefully:

- There are numerous clauses and provisions that have been incorporated via full text, by reference or per an addendum throughout the document
- Clauses incorporated by reference have the same force and effect as if they were included in their full text
- RFP contains several blanks that require fill-in by the Offeror. If information is not applicable, Offeror should insert “N/A”

# RFP Highlights

- Government intends to award without discussions
- This procurement is being conducted pursuant to FAR Part 15, Contracting by Negotiation
- Communication (L.17)
  - Questions due by 6/29/2015
  - Attachments J-06 UTM Concept of Operations (ConOps) and J-09 UTM Client Interface Control need to be requested
- H.6 1852.223-70 SAFETY AND HEALTH (APRIL 2002)
  - Due prior to staring performance of Task Order 2

# RFP Highlights

- L.19 VOLUME I—PREPARATION OF TECHNICAL PROPOSAL
  - IDIQ:
    - Evidence of a signed Other Transaction Agreement with the Federal Aviation Administration (FAA) identifying it as an FAA Test Site Operator designated under the FAA Modernization and Reform Act (FMRA) of 2012
    - K.2 52.204-8 Annual Representations and Certifications. (DEC 2014)
  - Task Order 1: Lowest Price Technically Acceptable
    - Minimum Order (I.5)
  - Task Order 2: Trade-off between Technically Acceptable and Price.

# RFP Highlights

- Section E.6 Evaluation
  - Initial Review of quotes will be conducted in accordance with NFS 1815.305-70, unacceptable quotes will be eliminated from further evaluation

# RFP Highlights

- Section M.2 IDIQ Contract Evaluation
  - Volume I (Technically Acceptable)
    - Proposals will be evaluated on a Pass/Fail basis, assigning a rating of Acceptable or Unacceptable

| TECHNICAL ACCEPTABLE / UNACCEPTABLE RATINGS | |
|---|---|
| RATING | DESCRIPTION |
| Acceptable | Offeror does not have a signed agreement with FAA identifying it as a Test Site |
| Unacceptable | Offeror does not have a signed agreement with FAA identifying it as a Test Site |

    - The Government may award one or more IDIQ contract(s) determined to be technically acceptable under the IDIQ evaluation criteria

# RFP Highlights

- Section M.3 Task Order 1 Technical Factor Evaluation
  - Volume I (Technically Acceptable)
    - Proposals will be evaluated on a Pass/Fail basis, assigning a rating of Acceptable or Unacceptable

| TECHNICAL ACCEPTABLE / UNACCEPTABLE RATINGS | |
|---|---|
| RATING | DESCRIPTION |
| Acceptable | Proposal meets the minimum requirements of the solicitation |
| Unacceptable | Proposal does not meet the minimum requirements of the solicitation |

    - The Government may award a Task Order starting with the lowest price that was determined technically acceptable under the Task 1 evaluation

# RFP Highlights

- Section M.4 Task Order 2 Technical Factor Evaluation
  - Task 2 will be evaluated using a trade off between technically acceptable and price. Technical is significantly more important than cost or price.
  - These weights are used as a guideline in the source selection decision making process

| Technical Task Order 2 | |
|---|---|
| Sub-Factors | Weights |
| LVC-DE Connection | 30 |
| ConOps 1 | 35 |
| ConOps 2 | 35 |
| Total | 100 |

# RFP Highlights

- Section M.6 Price Factor
  - Although the price volume is not numerically scored, it's important in determining that the Offeror understands the requirement
  - Price analysis techniques will be applied to the Evaluated Price to ensure that a fair and reasonable price is paid by the Government
  - The Government will develop an Evaluated Price for each Offeror considered for selection

# Acquisition Schedule

| | |
|---|---|
| RFP Released | June 4, 2015 |
| Site Visit | June 18, 2015 |
| Proposals Due | July 9, 2015 |
| Evaluations and Selection Complete | August 21, 2015 |
| Contract Award | September 2, 2015 |

# Technical Requirements Overview

LVC-DE  Briefing (Jim Murphy/Neil Otto)

Ames Research Center
FAA Test Site Operator

# LVC Connection

- Goal
  - Prototype LVC connection between UAS Test Sites and UAS Project Infrastructure for use in potential future DAA and other UAS research
- Purpose of this briefing: describe current and planned LVC usage
  - LVC Overview
  - Existing Connections
  - Planned Usage

# LVC Conops

- Live: Real people operating real assets
- Virtual: Real people operating simulated assets
- Constructive: Simulated people operating simulated assets
- Distributed Environment: Brings simulation to the LVC assets increasing external partner options

***T-34C UAS Surrogate***

***CNPC Data Link***
- *C2*
- *Voice*
- *H&S*
- *Video*
- *Traffic*

**UAS Pilot**

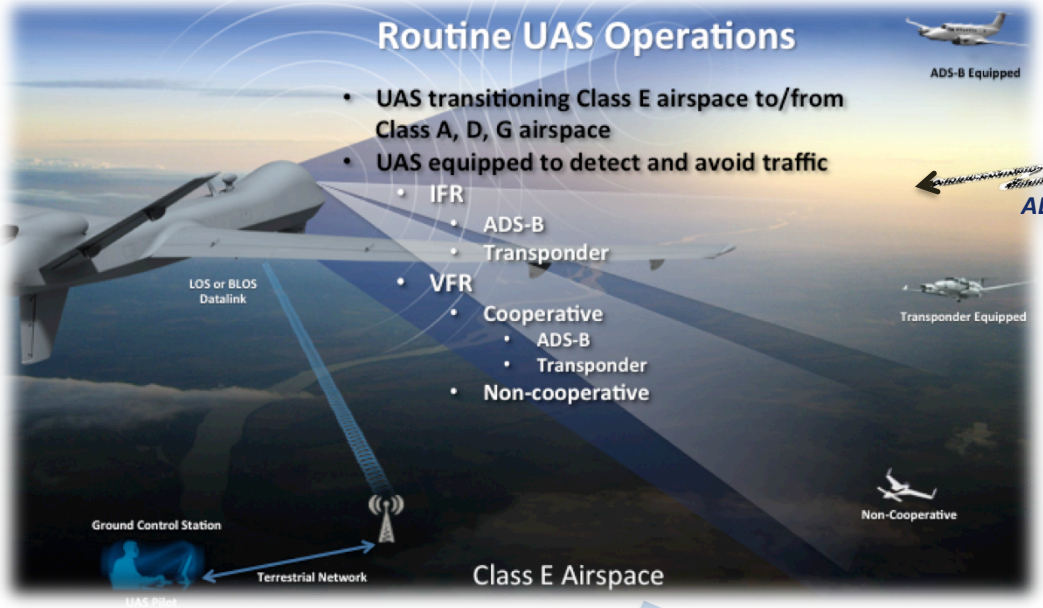


***Live Intruder***
- ***ADS-B/TCAS II Equipped***
- ***High speed***

***ADS-B Out***

***Virtual/Constructive Intruders***

**Research GCS**

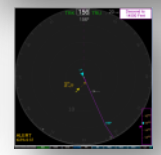

**Displays of Proximal Traffic**

**VPN**

**ATC**

**Target Generation**

# High Level LVC Connectivity

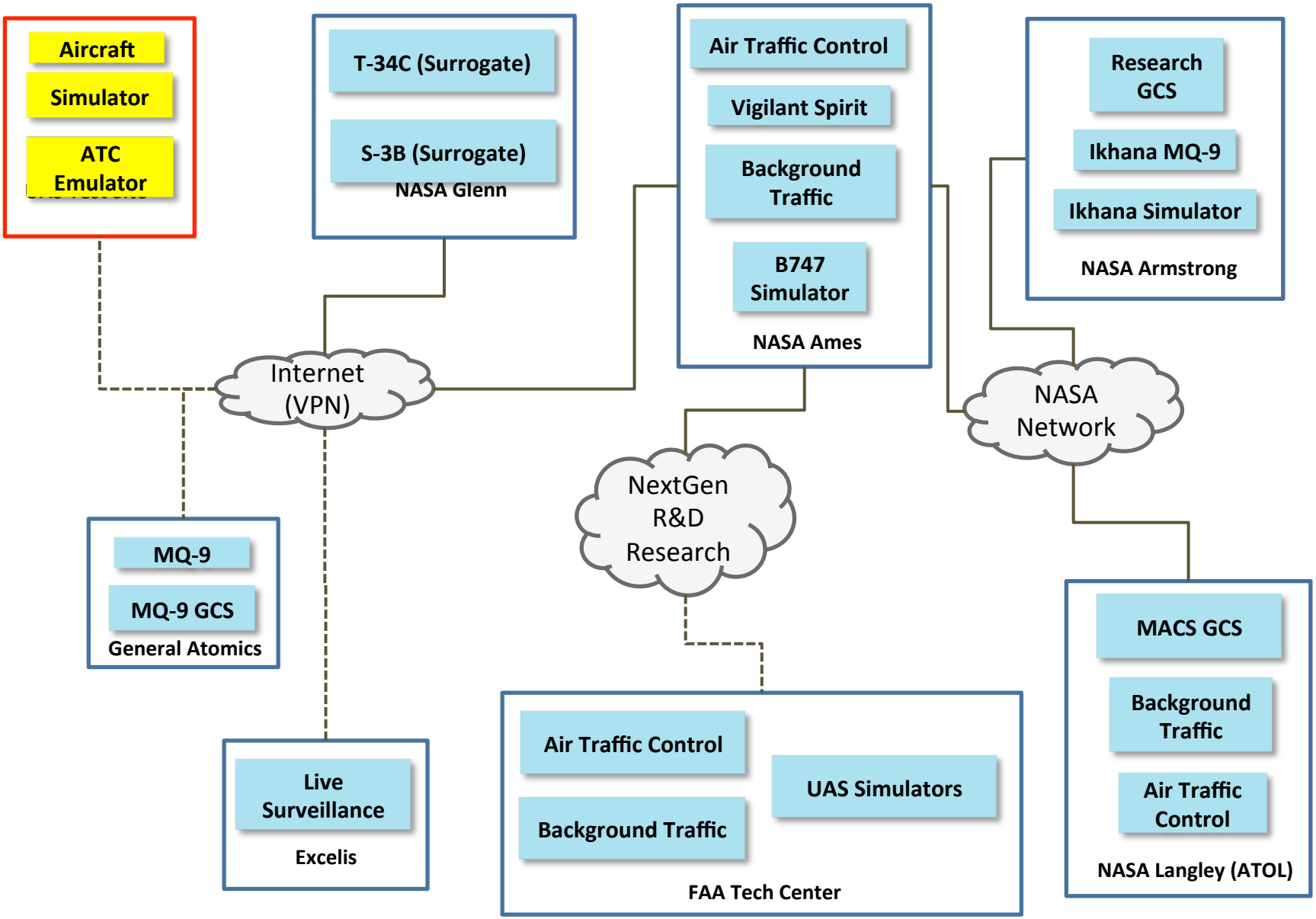

# LVC Assets

- Live
  - Ikhana (NASA's MQ-9)
  - T-34C (Surrogate UAS)
  - S-3B Viking (Surrogate UAS)
  - Vigilant Spirit Control Station
- Virtual
  - Ikhana Sim
  - B747 Flight Simulator
  - Vigilant Spirit Control Station
  - Multi-Aircraft Control System (MACS) ATC Emulator
- Constructive
  - MACS Pseudo Pilot

# Ikhana MQ-9 Predator B at NASA Armstrong

# T-34C at NASA Glenn

# S-3B Viking at NASA Glenn

# Ikhana Simulator at NASA Armstrong

# B747 Flight Simulator at NASA Ames

# UAS Ground Control Station at NASA Armstrong

*Lab Layout for Flight Test*

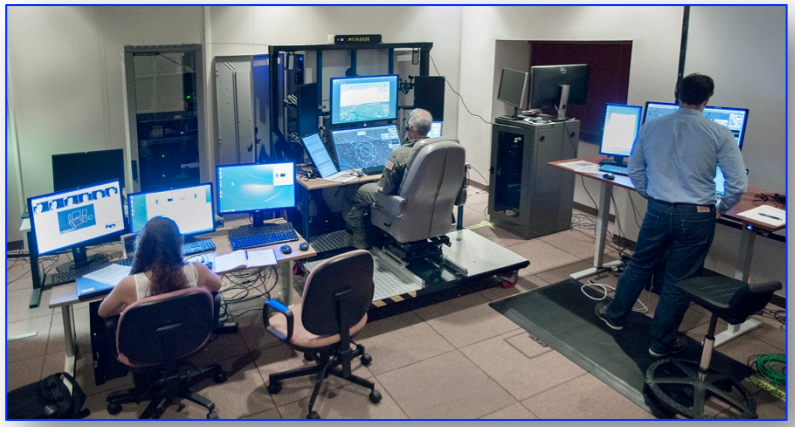

*Pilot Control Station Layout for Flight Test*

# ATC and Pseudo Pilots at NASA Ames and NASA Langley

Pseudo Pilot Control

Air Traffic Control

# Multi-Aircraft Control System (MACS)

**Active/Ctrl AC List**

**Pseudo Pilot Control**

**Air Traffic Control**

# LVC Distributed Network

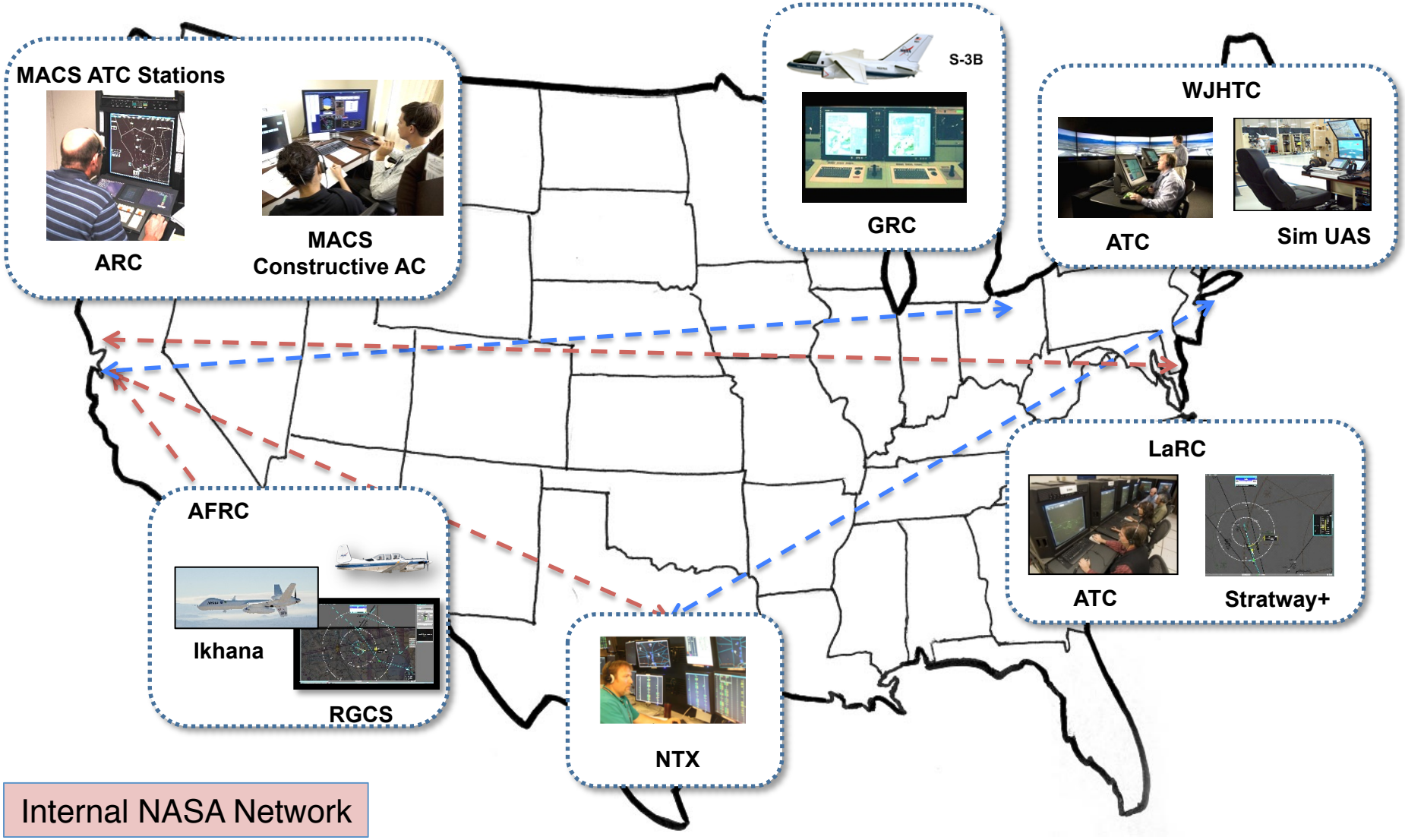


Internal NASA Network

External Network

# Distributed Connectivity Demonstration

Initial test of distributed simulation capability among multiple participants

NASA Ames
NASA Langley
DoD NavAir Pax River
Boeing Palmdale
Boeing Philadelphia
FAA Technical Center

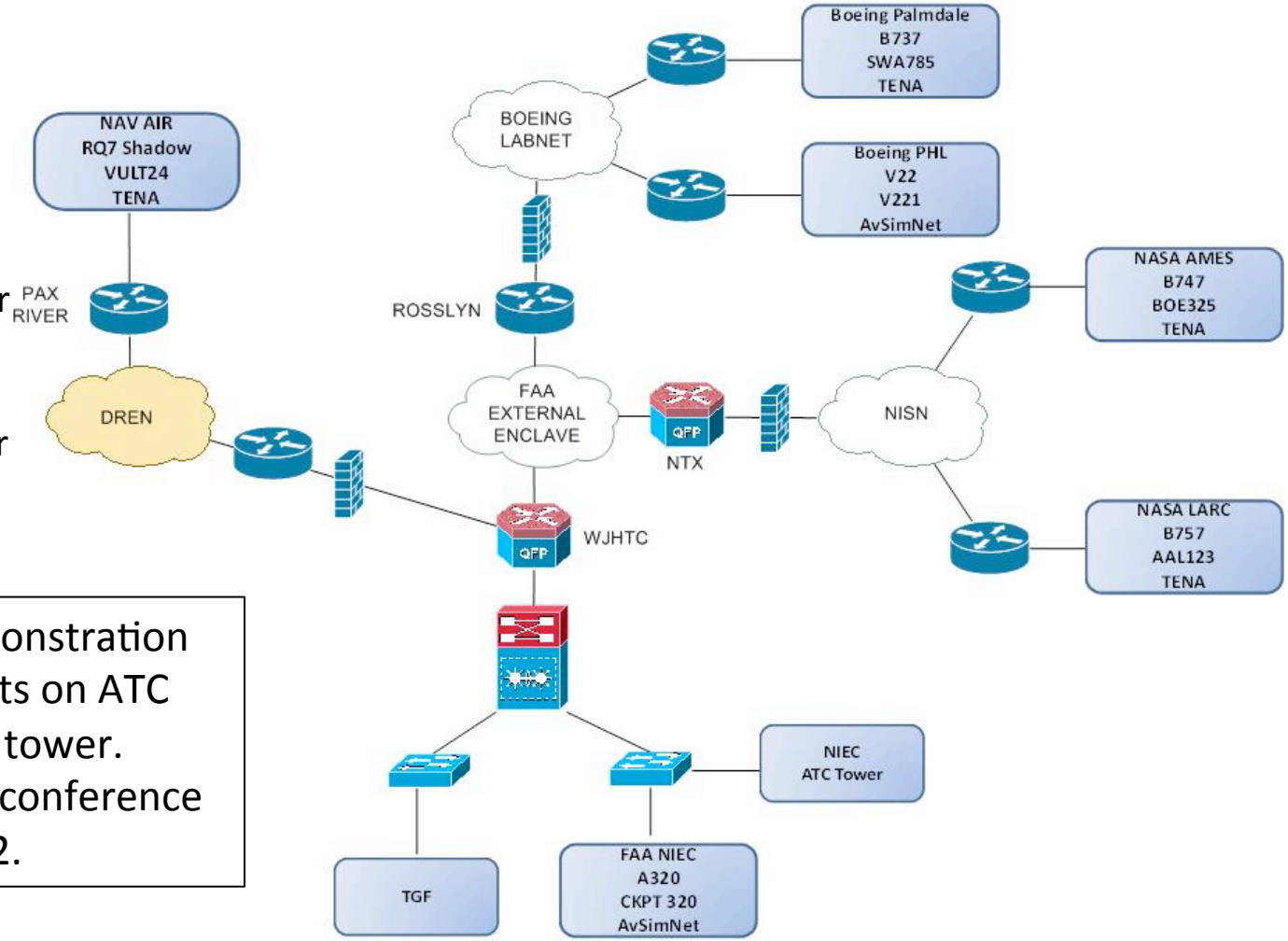


August 2012: Demonstration of simulated targets on ATC scopes and virtual tower. Presented at ITEA conference in September 2012.

# Early Equipment Integration and Checkout

**ADS-B Integration on the Ikhana UAS**

- Integrated a COTS (Garmin GDL-90) ADS-B onto a large UAS
  - Full ADS-B Out and In functionality
  - Unprecedented traffic situational awareness to UAS pilots
- Collected ADS-B "as installed" performance flight test data
  - Accuracy, uncertainty of position, velocity, and altitude reports
  - ADS-B Out (Mar 15/20), ADS-B In (May 8/11)
- Flight test results (Flight Test Series 1)
  - Verified ADS-B Out met FAA Advisory Circular AC 20-165 for ADS-B Out equipage
  - Valuable FAA Tech Center support with validated data analysis tools
  - **Connected Dryden to LVC and Verified data exchange of live, virtual, and constructive traffic information between all participants**

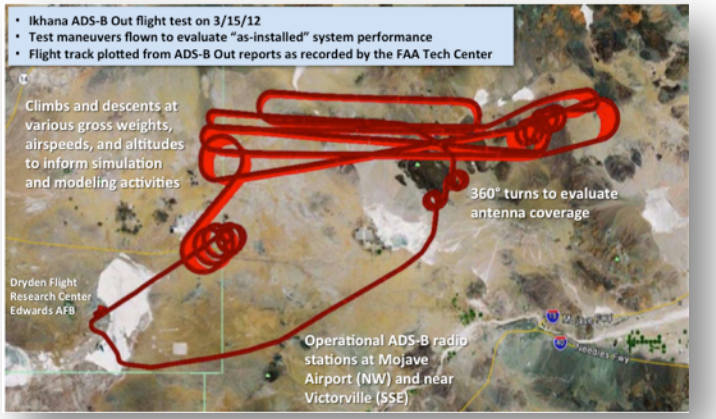


*Ikhana flight path as tracked by the national ITT ADS-B Surveillance Network*

*ADS-B Ground Tests on Ikhana UAS*

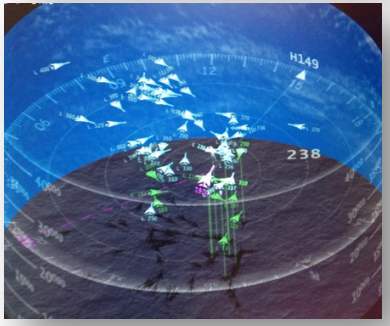


*Live ADS-B and TIS-B data shown on virtual cockpit display*

# PT5 Experiment: High Level Architecture

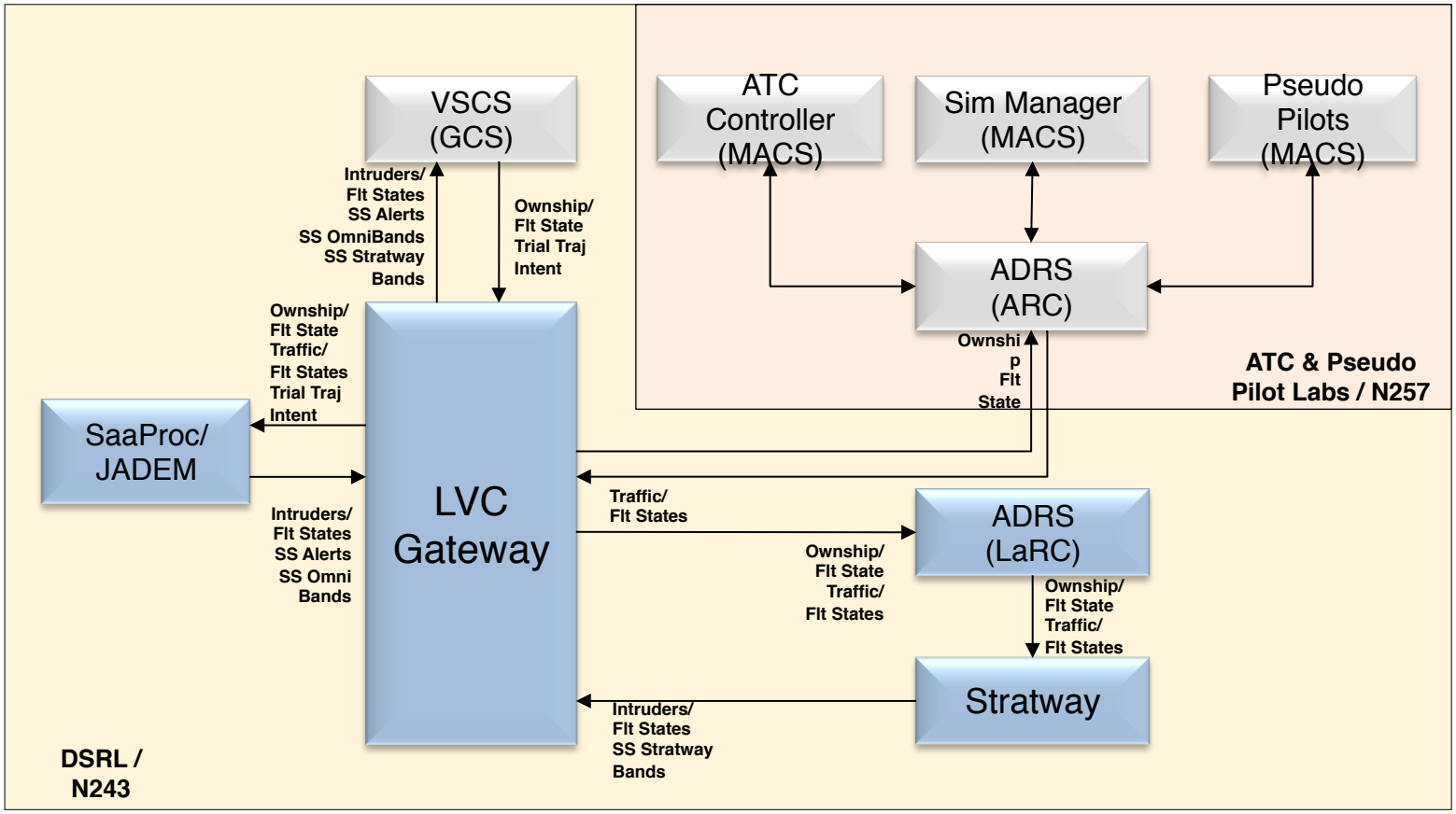

# FT3: Configuration 1A (Pairwise-Low Speed Ownship) – Ikhana

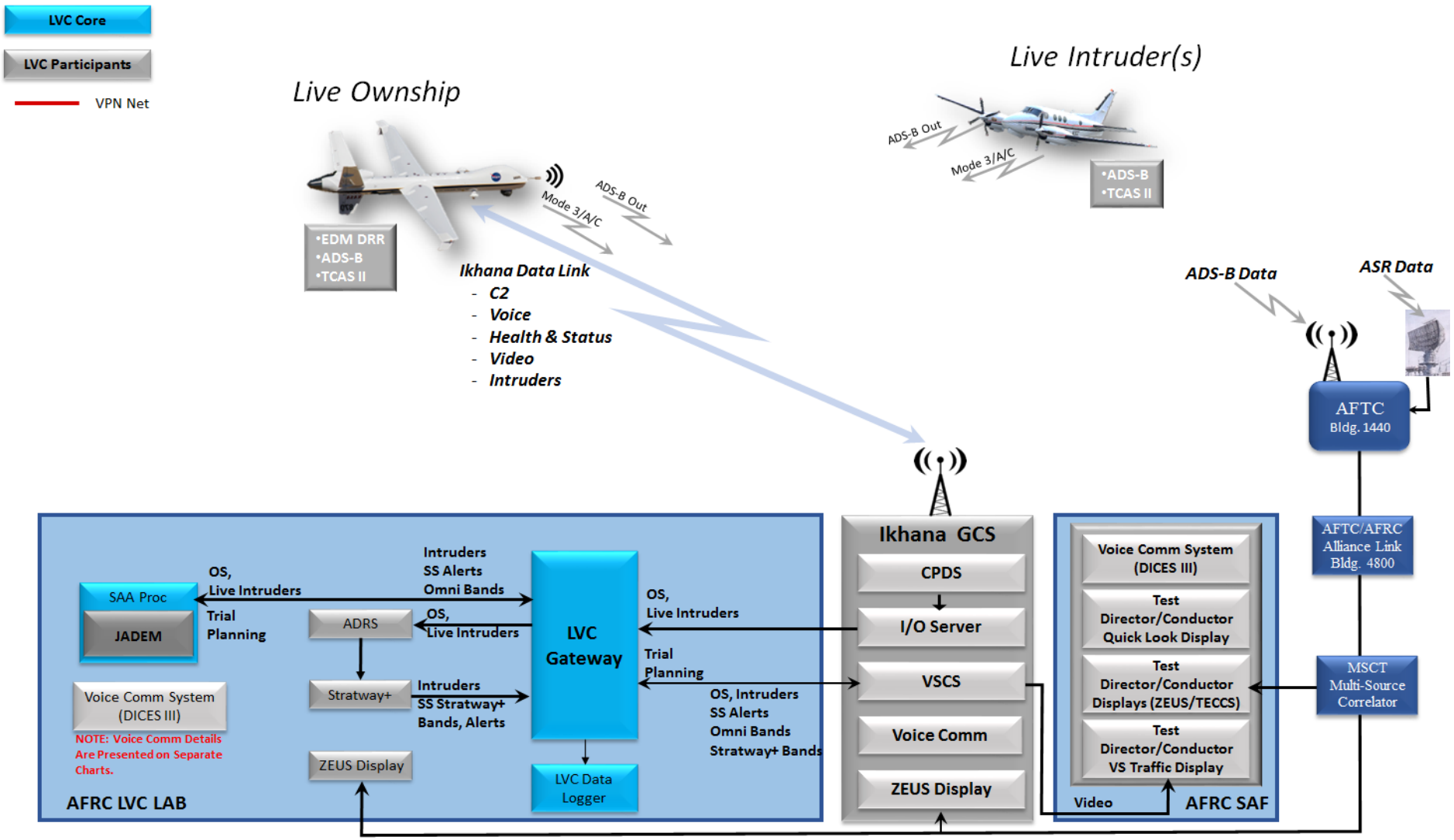

# FT3: Configuration 1B (Pairwise-High Speed Ownship) – S-3B

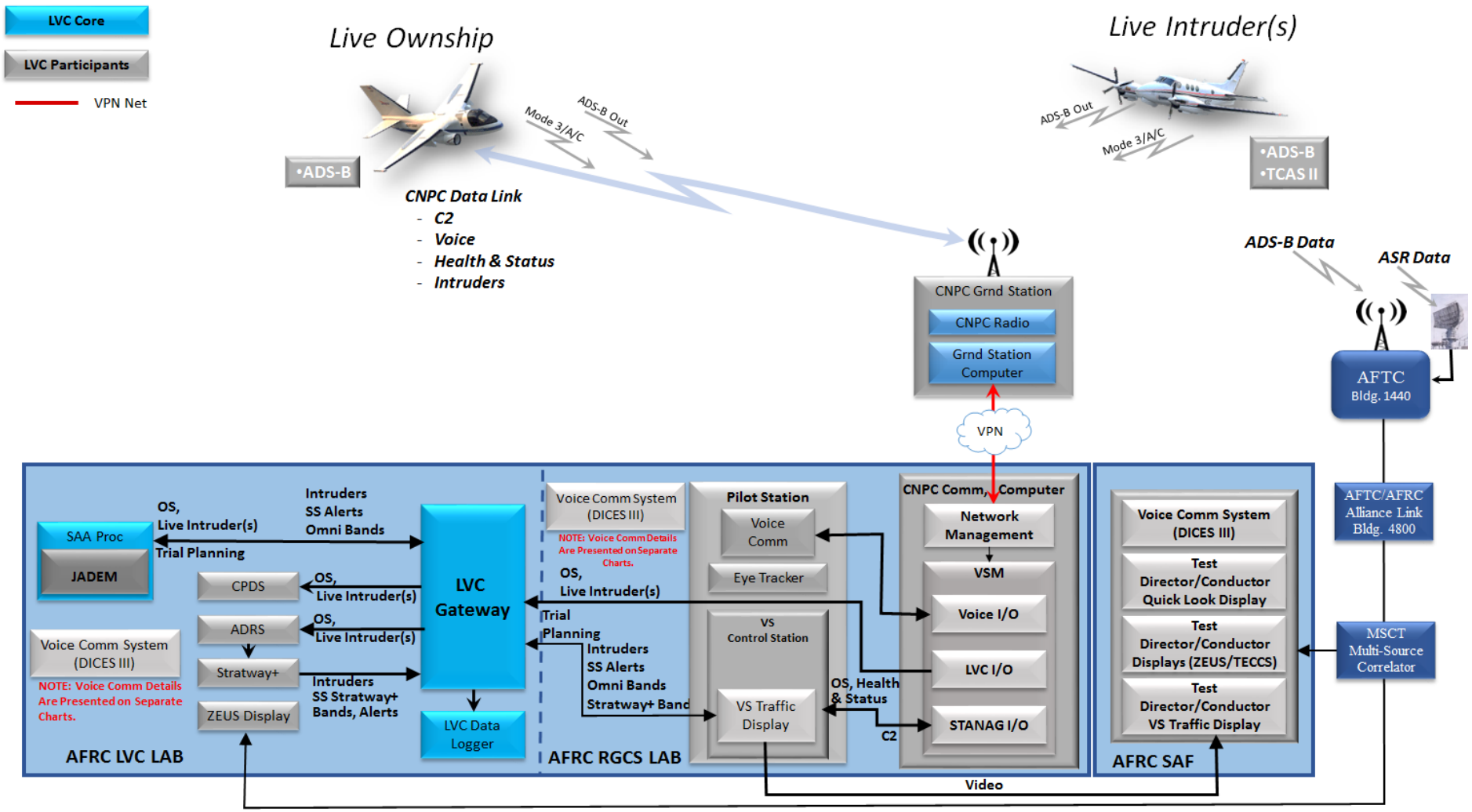

# FT3: Configuration – Surrogate UA

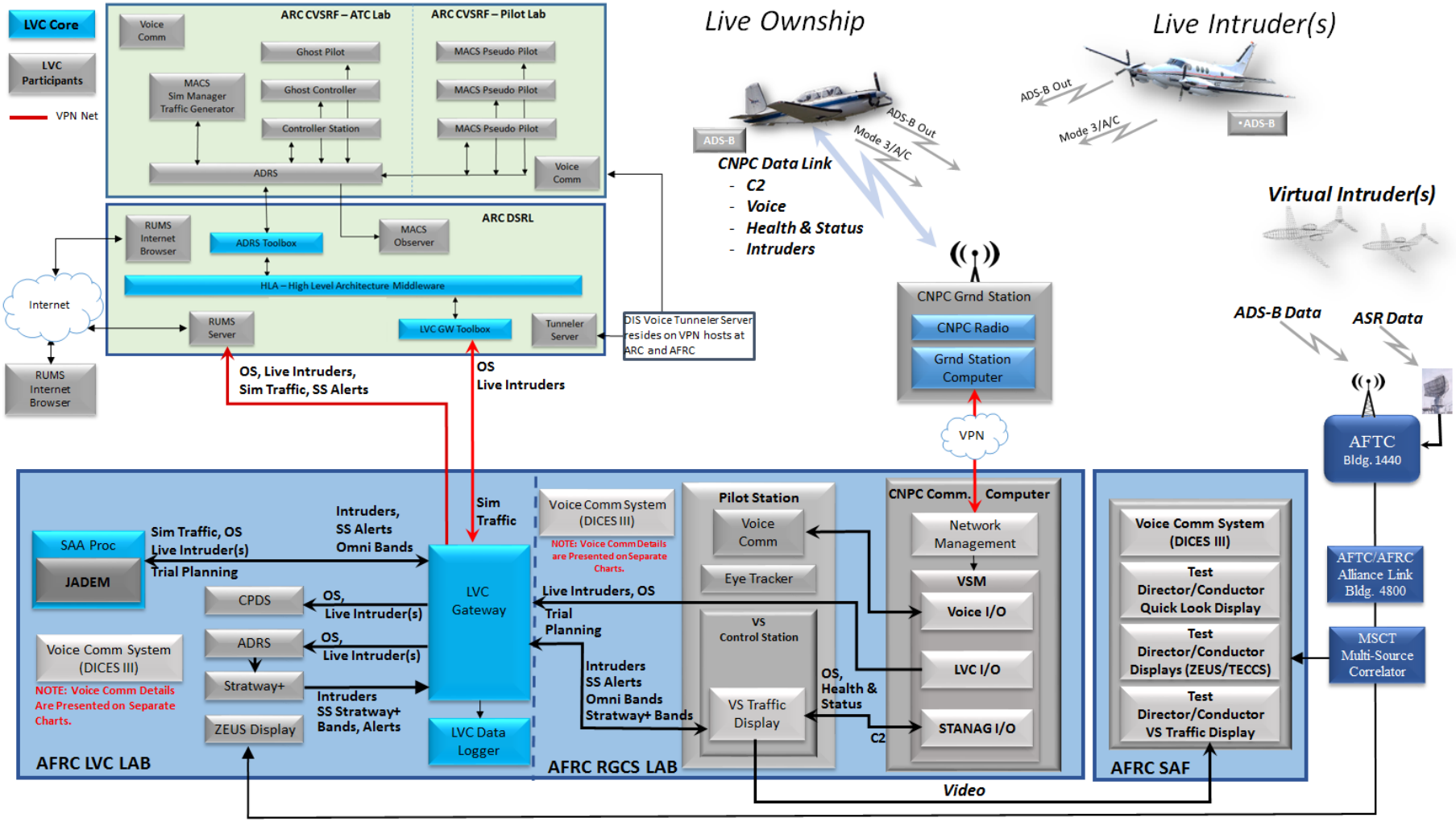

# LVC Connection Options

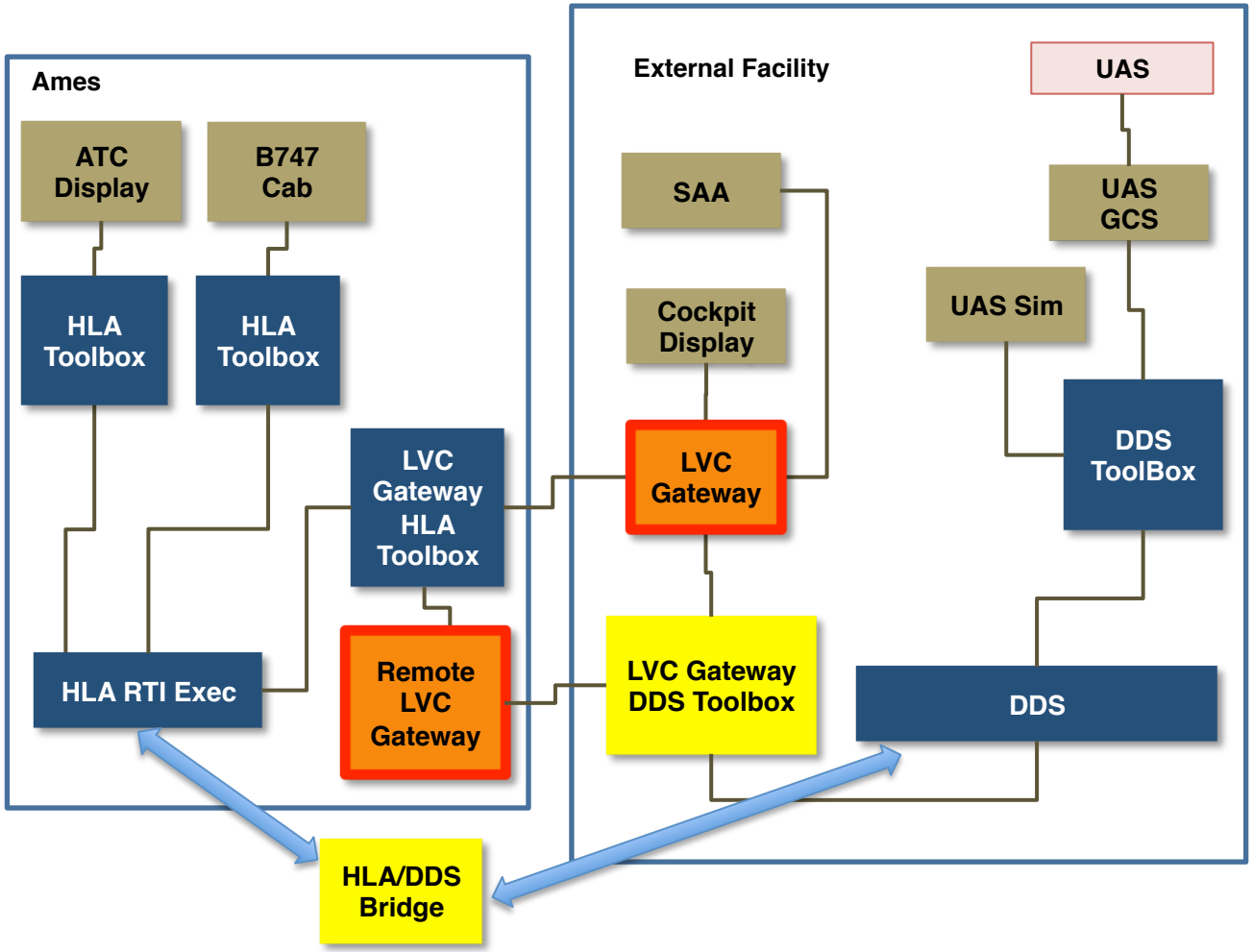


**Features:**

- Local UAS LVC connection to demonstrate connectivity
- Leverages existing middleware infrastructure (DDS)
- Supports integration of existing UAS technologies
- Option 1: External connection through UAS LVC infrastructure
- Option 2: External connection via DDS/ HLA Bridge

# LVC Connection Options

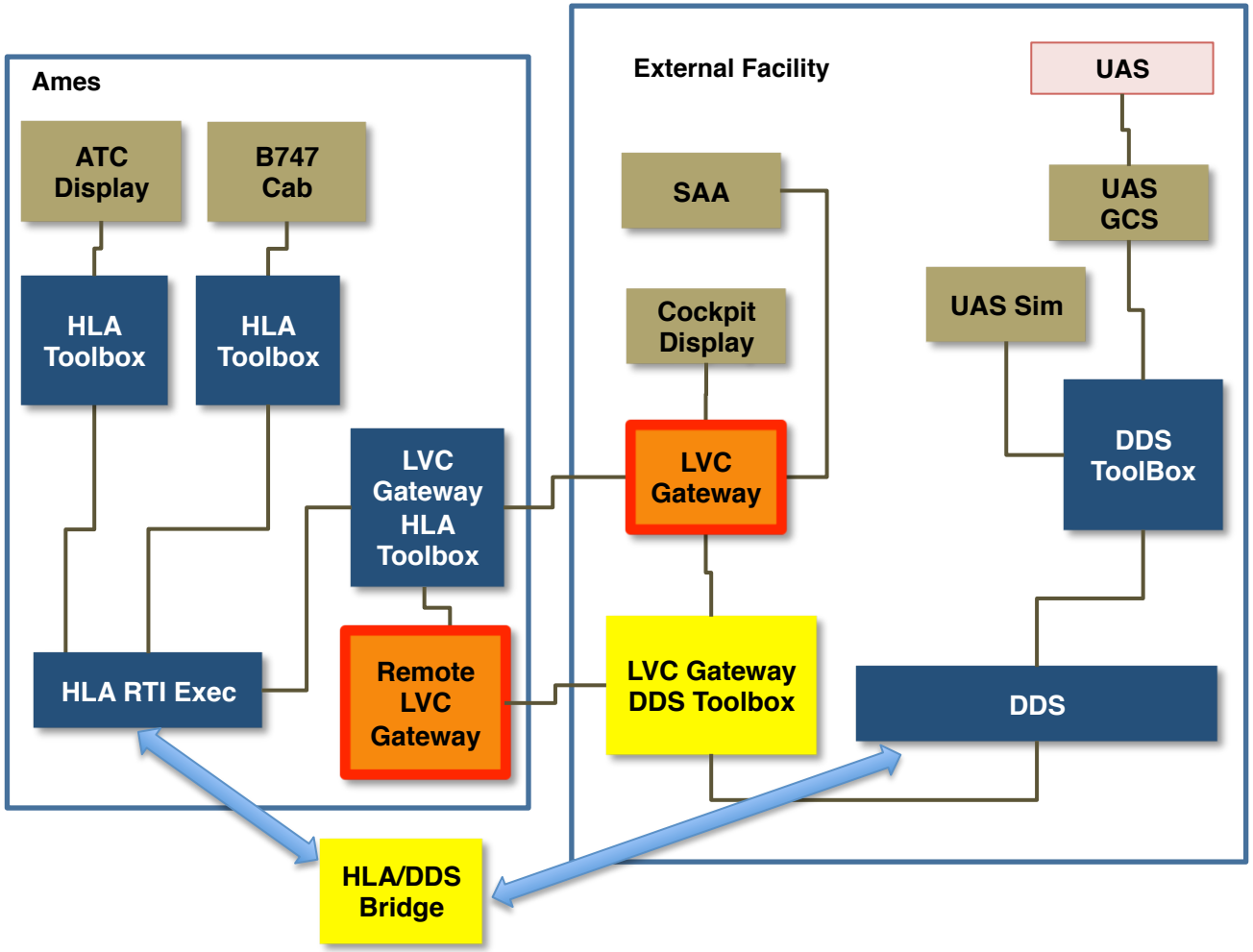


**Data Collection:**

- LVC Gateway records all messages
- Can repeat LVC Gateways to collect data remotely

# Example Data Archive Directory Structure

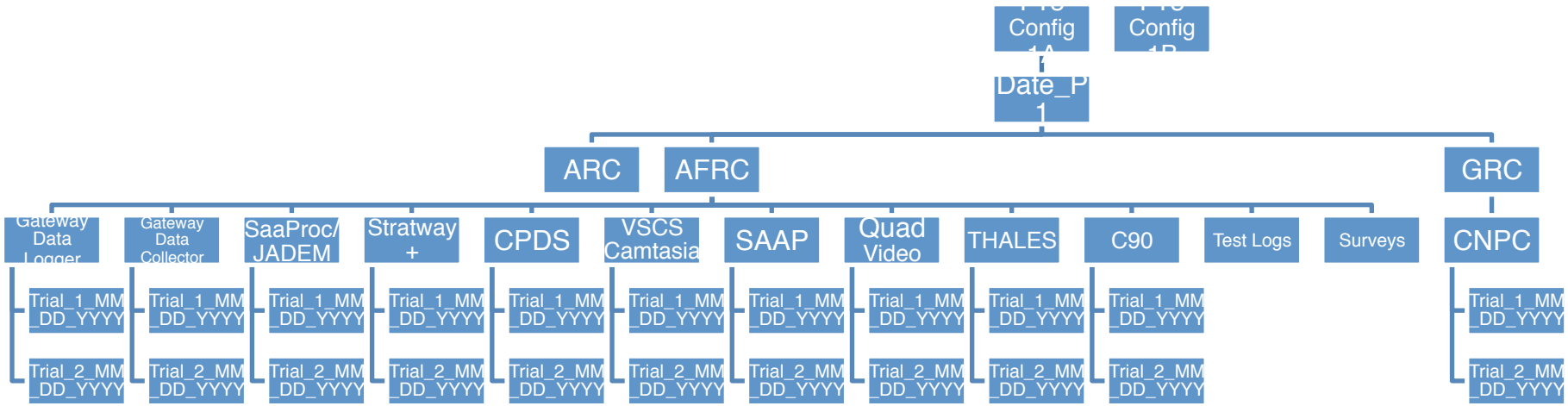


- **Directory hierarchy for our Flight Test data archive**
  - **All flight test data on common server to distribution and archiving**
  - **Specific data for archiving is identified, data is reduced prior to storage**
    - **Sensitive data (that is not required for analysis) is removed**

# LVC Connection Options

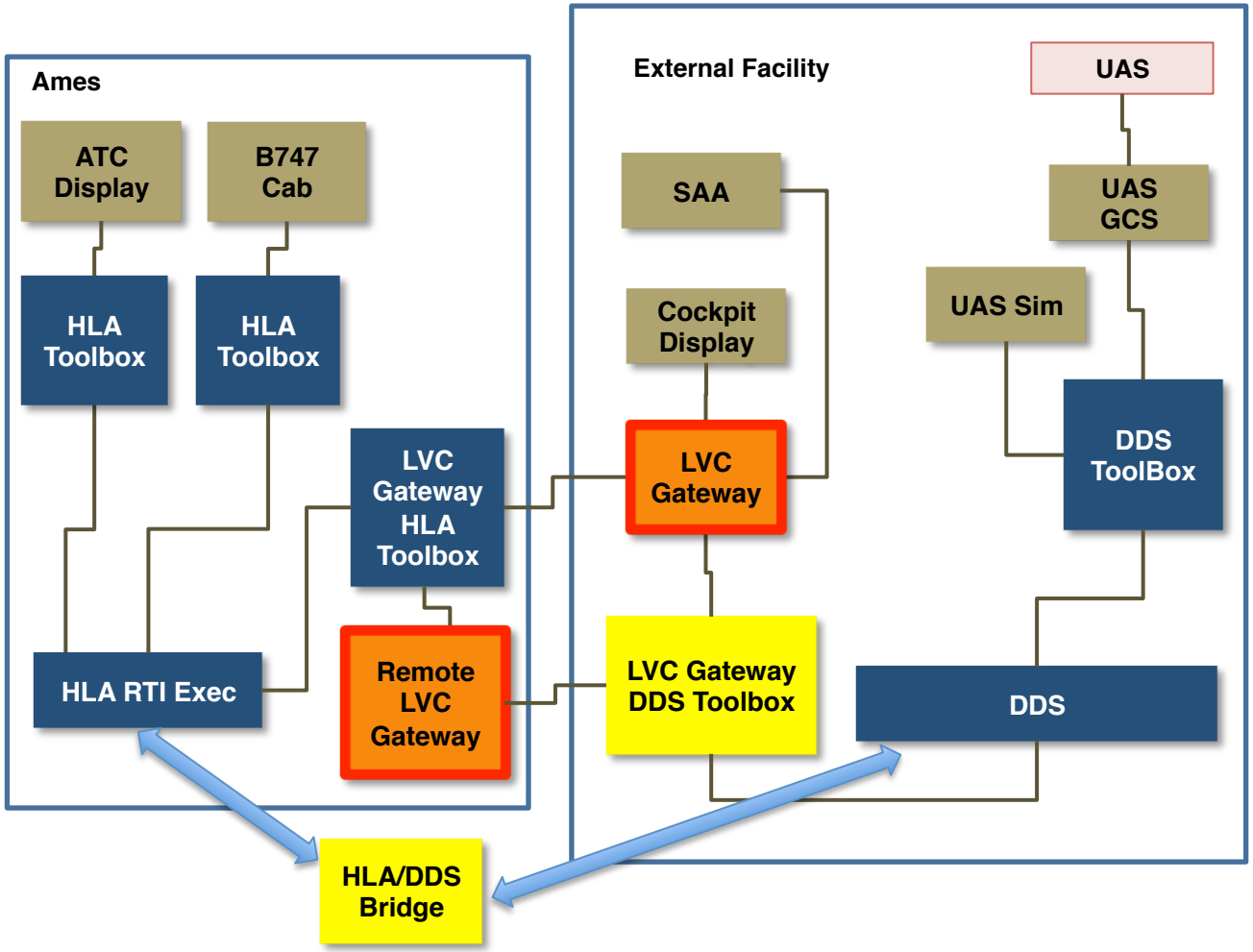


**Data Connection:**

- **Data Connection Agreement required**
  - Specifies machines and content of connection
  - Depends on connection design
- **Encrypted via VPN between UAS Test Site facility and NASA Ames SimLabs**

# Alternative Connection

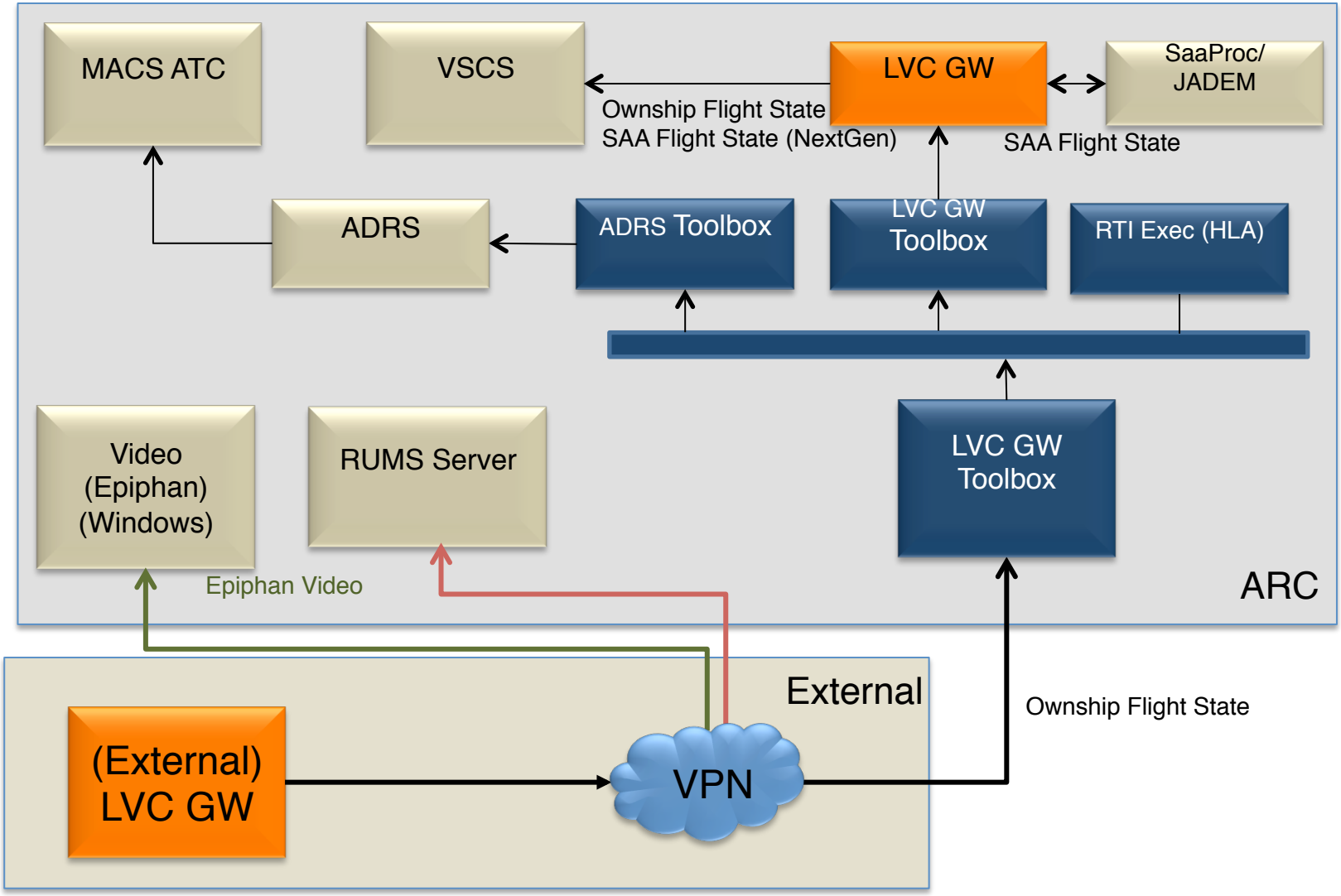

# LVC Connectivity Decisions

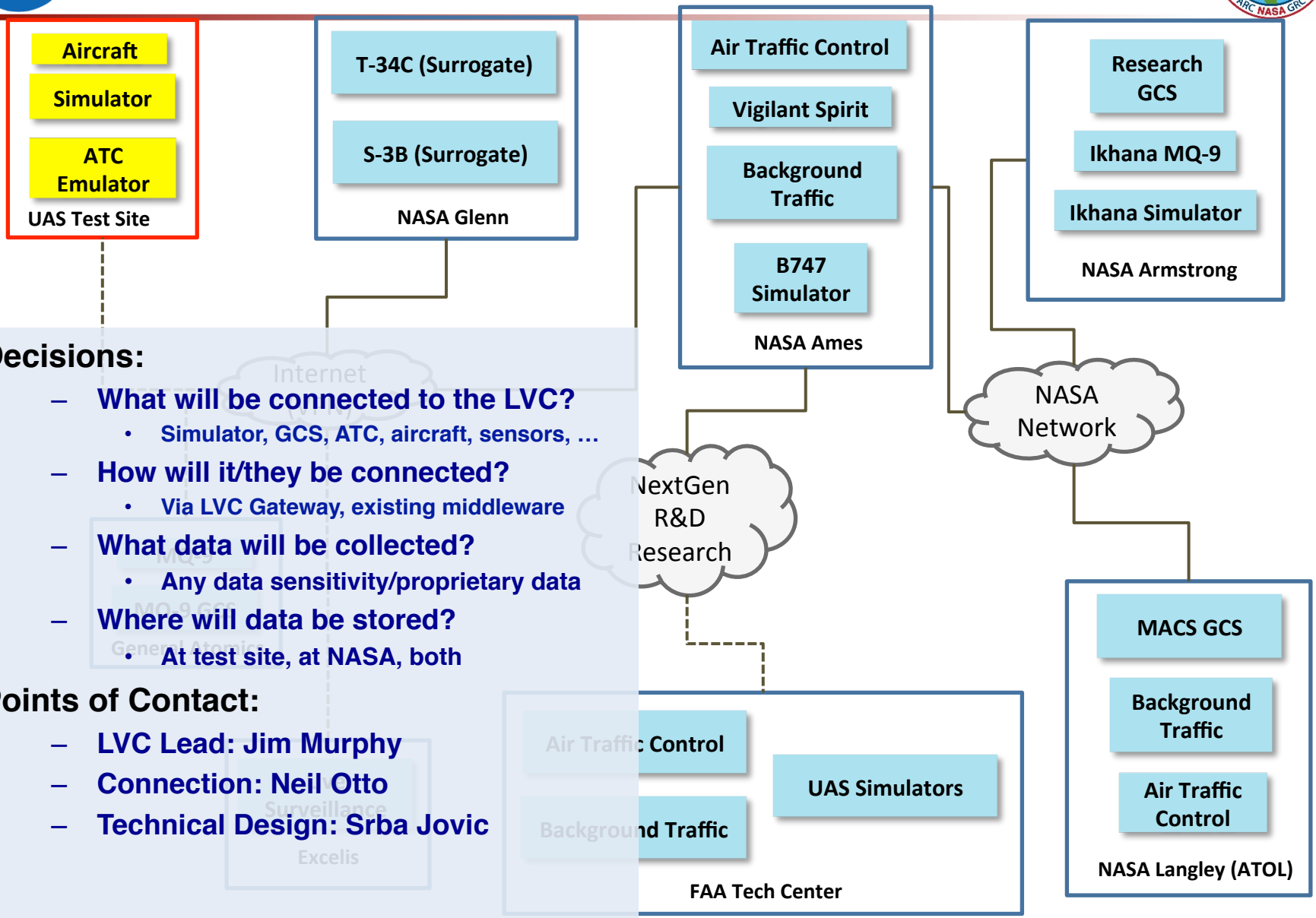


**Decisions:**

- **What will be connected to the LVC?**
  - **Simulator, GCS, ATC, aircraft, sensors, …**
- **How will it/they be connected?**
  - **Via LVC Gateway, existing middleware**
- **What data will be collected?**
  - **Any data sensitivity/proprietary data**
- **Where will data be stored?**
  - **At test site, at NASA, both**

**Points of Contact:**

- **LVC Lead: Jim Murphy**
- **Connection: Neil Otto**
- **Technical Design: Srba Jovic**

# Summary

- LVC Overview
- Existing Technologies
- Existing Connections
- Planned Usage

# Tour/Site Visit

- No cell phones, photographs, audio or video recording
- No smoking
- Stay with group
- Do not interfere with staff

# Submit All Questions in Writing

Armstrong Flight Research Center
FAA Test Site Operator

# Closing Remarks

- Questions and Answers
- Pre-Proposal charts, list of attendees, and answers to questions will be provided as an amendment to the solicitation
- Any changes made to the RFP will be done through a formal amendment

UAS Solicitation
NND15548481R
June 18, 2015

| # | Name | Signature | Affiliation |
|---|---|---|---|
| 1 | RAY YOUNG | R. A. Young III | GRIFFISS |
| 2 | Chad Lawrence | Chad Lawrence | Griffiss |
| 3 | Doug Olsen | Doug Olsen | Northern Plains UAS TS |
| 4 | Bruce Tarbert | [illegible] | Nevada UAS TEST SITE |
| 5 | JOE HENRY | [illegible] | LONE STAR |
| 6 | Melanie Neely Willis | [illegible] | Lone Star |
| 7 | Robert Sakahara | [illegible] | NASA-AFRC |
| 8 | Rosalia Toberman | [illegible] | NASA - AFRC |
| 9 | Chong Ryan | [illegible] | NASA AMES |
| 10 | PAUL FAST | [illegible] | NEVADA - GCZIT/FAA |
| 11 | Ty Hoang | [illegible] | NASA AMES |
| 12 | Srba Jovic | [illegible] | SAIC/NASA Ames |
| 13 | Neil Otte | [illegible] | SAIC/SimLabs |
| 14 | JACK CONNOLLY | [illegible] | MCS/NASA Ames |
| 15 | | | |
| 16 | | | |
| 17 | | | |
| 18 | | | |