NOTICE - WHEN GOVERNMENT DRAWINGS, SPECIFICATIONS, OR OTHER DATA ARE USED FOR ANY PURPOSE OTHER THAN IN CONNECTION WITH A DEFINITELY RELATED GOVERNMENT PROCUREMENT OPERATION, THE UNITED STATES GOVERNMENT THEREBY INCURS NO RESPONSIBILITY NOR ANY OBLIGATION WHATSOEVER, AND THE FACT THAT THE GOVERNMENT MAY HAVE FORMULATED, FURNISHED, OR IN ANY WAY SUPPLIED THE SAID DRAWINGS, SPECIFICATIONS OR OTHER DATA IS NOT TO BE REGARDED BY IMPLICATION OR OTHERWISE AS IN ANY MANNER LICENSING THE HOLDER OR ANY OTHER PERSON OR CORPORATION, OR CONVEYING ANY RIGHTS OR PERMISSION TO MANUFACTURE, USE, OR SELL ANY PATENTED INVENTION THAT MAY IN ANY WAY BE RELATED THERETO.

REVISIONS

SYM	DESCRIPTION	DATE	APPROVAL

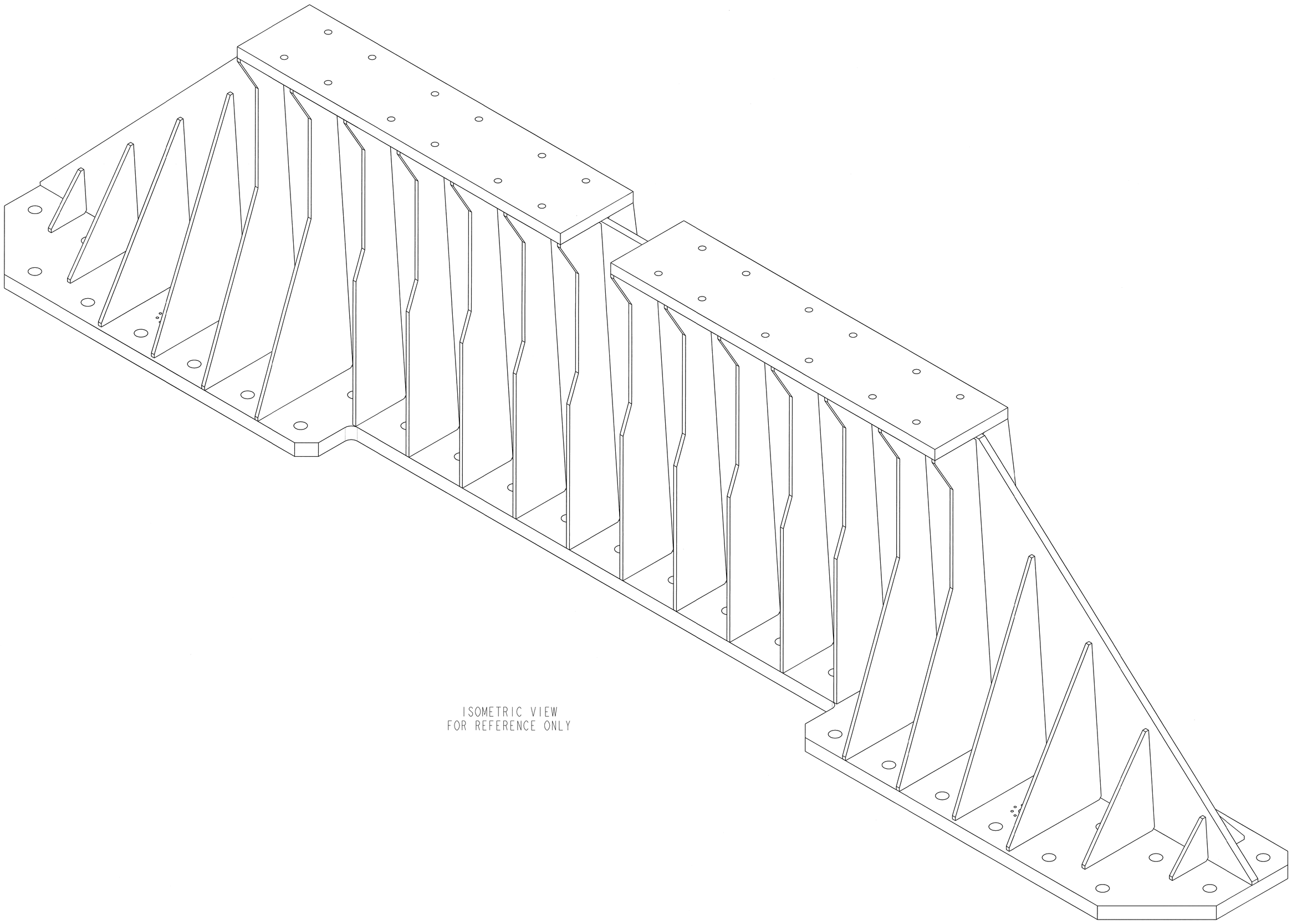

ISOMETRIC VIEW
FOR REFERENCE ONLY

UNLESS OTHERWISE SPECIFIED:

1. REMOVE ALL BURRS AND BREAK ALL SHARP EDGES.
2. 250 ALL MACHINED SURFACES.
   500 ALL EDGES OF CUT PLATES AND ENDS OF AISC SHAPES.
3. DIMENSIONING AND TOLERANCING IN ACCORDANCE WITH ASME Y14.5-1994.
4. STENCIL PART NUMBER IN THE APPROXIMATE LOCATION SHOWN USING A CONTRASTING COLOR AND 2" TALL LETTERS.
5. CARBON STEEL WELDING DESIGN, PROCEDURES, AND NON-DESTRUCTIVE EVALUATION SHALL BE PER ANSI/AWS D1.1/D1.1M, "STRUCTURAL WELDING CODE-STEEL" AND CURRENT AS OF THE RELEASE DATE OF THIS DRAWING. UTILIZE WELDING PRACTICES AND TECHNIQUES TO MINIMIZE DISTORTION. ALL WELDS SHALL BE 100% VISUALLY INSPECTED.
6. PAINT ALL EXPOSED SURFACES USING SHERWIN WILLIAMS POLANE F63 AS FOLLOWS: PREPARE SURFACES, ABRASIVE CLEANING WHERE NECESSARY, THEN POLYURETHANE PRIMER AND TOP COAT. FINISH COLOR ORANGE NO. 12243 PER FED-STD-595C.

   TOUCH UP ALL PAINTED AREAS DAMAGED DURING ASSEMBLY OR INSTALLATION USING BRUSH OR ROLLER ONLY. INDICATED DETAILS SHALL BE UNPAINTED AND COATED WITH TRI-FLOW TO PREVENT CORROSION

   SUBSTITUTIONS FOR PAINT TYPE, COLOR SHADE, OR PROTECTIVE COATING MAY BE PERMITTED WITH NASA ENGINEERING APPROVAL.
7. AFTER WELDING AND PRIOR TO FINAL MACHINING, STRESS RELIEVE PER AWS D1.1, "STRUCTURAL WELDING CODE, STEEL", AND CURRENT AS OF THE RELEASE DATE OF THIS DRAWING. A BRIGHT OR SCALE-FREE SURFACE IS REQUIRED FOR NOTED FAYING SURFACES.
8. HOLES SHOULD BE DRILLED AFTER WELDING IS COMPLETE, PRIOR TO PAINT.

FIND NO.	CALLOUT SHT NO.	DETAIL SHT NO.	TOT REQ'D		PART NO.	DESCRIPTION	VEND NO.	REMARKS
4	2	2	AR	P	90M14283-4	4.0" THICK STEEL PLATE		ASTM A572, GR50 BASE PLATE & TOP MOUNTING PLATES
3	2	2	AR	P	90M14283-3	2.0" THICK STEEL PLATE		ASTM A572, GR50 VERTICAL PLATE
2	2	2, 3	AR	P	90M14283-2	1.0" THICK STEEL PLATE		ASTM A572, GR50 GUSSETS
1	2		-	A	90M14283-1	WELDMENT, SRB PX LOADLINE, FLOOR MOUNTED, SLS INTERTANK TEST		

A=ASSEMBLY/INSTALLATION E=EXISTING F=FABRICATED ITEM M=MODIFIED ITEM P=PURCHASED ITEM

DESIGN	4/13/2015	PROJECT MANAGER	5-7-15
MATERIAL	4/29/15	TEST ENGINEER/ANALYSTS	4/7/15
INDUSTRIAL SAFETY	5/4/15	ETD CONTRACTOR DESIGN LEAD	5-8-15
SAFETY AND MISSION ASSURANCE	4/29/15	ETD LEAD DESIGNER	4/14/15
NONDESTRUCTIVE TEST CONTRACTOR	4/29/15	CHIEF	4-8-15
PRESSURE CERTIFICATION MANAGER	-NA-	ETD BRANCH CHIEF/TEAM LEAD	5/08/15

UNLESS OTHERWISE SPECIFIED
TOLERANCES ARE
FRACTIONS: ± 1/16 ± 1°/2
DECIMALS: .X ± .05; .XX ± .03; .XXX ± .010; ∠ ± .33°
(DIMENSIONS ARE IN INCHES, DO NOT SCALE DRAWING)

DRAWN BY: CJ NONA | NEXT ASSEMBLY: 90M13941-1 | DATE: 12-05-13

WELDMENT,
SRB PX LOADLINE,
FLOOR MOUNTED,
SLS INTERTANK TEST

SPECIAL TEST EQUIPMENT
DESIGN BRANCH - ET50
GEORGE C. MARSHALL
SPACE FLIGHT CENTER
NATIONAL AERONAUTICS
AND SPACE ADMINISTRATION
HUNTSVILLE, ALABAMA

90M14283 | REVISION ~

SIZE E | SHEET 1 OF 3

APPROVED FOR PUBLIC RELEASE; DISTRIBUTION IS UNLIMITED

APPROVED FOR PUBLIC RELEASE; DISTRIBUTION IS UNLIMITED

SPECIAL TEST EQUIPMENT DESIGN BRANCH - EI50	WELDMENT, SRB PX LOADLINE, FLOOR MOUNTED, SLS INTERTANK TEST
GEORGE C. MARSHALL SPACE FLIGHT CENTER NATIONAL AERONAUTICS AND SPACE ADMINISTRATION HUNTSVILLE, ALABAMA	90M14283
REVISION SEE SHT1	SIZE E SHEET 2 OF 3

ASSEMBLY 1
WEIGHT: 51,100 LBS
SCALE 161/2400

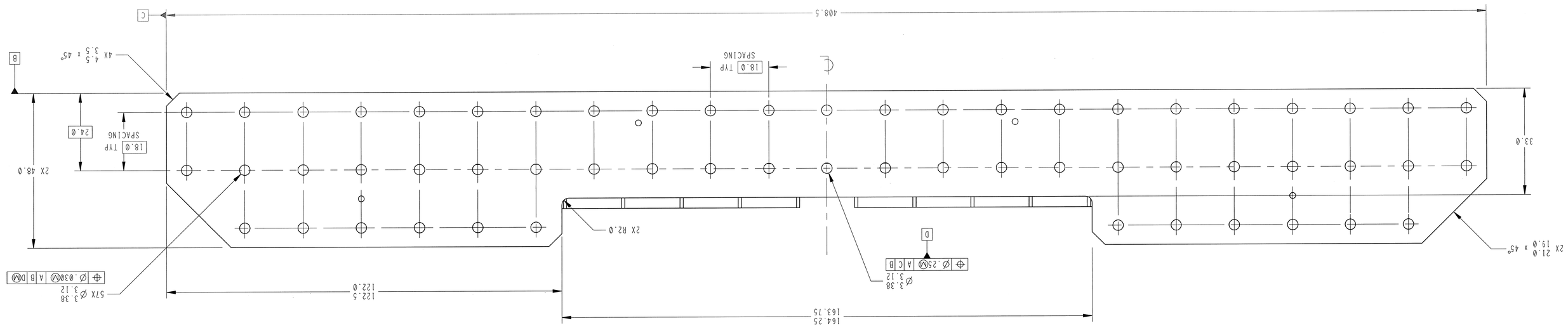

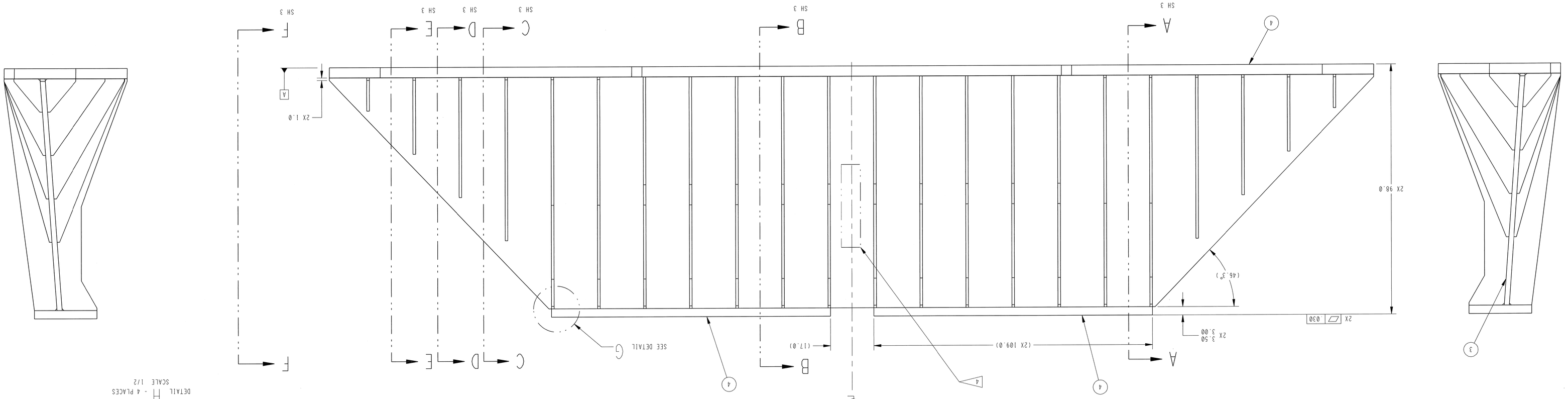

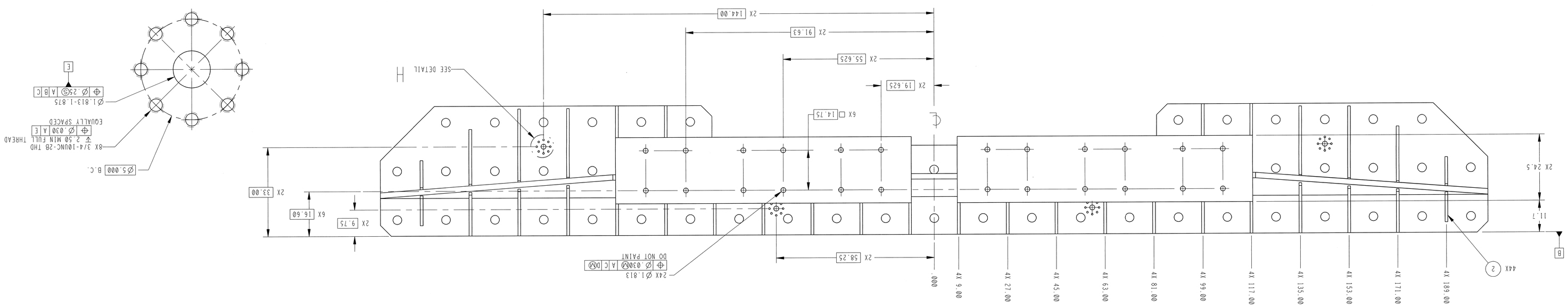

DETAIL H - 4 PLACES
SCALE 1/2

DETAIL G - 4 PLACES
SCALE 2/15

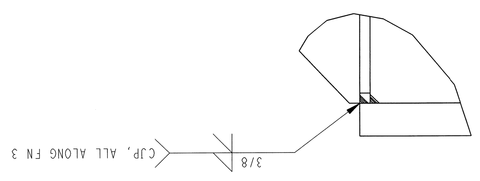

REVISIONS			
SYM	DESCRIPTION	DATE	APPROVAL

WORK - MADE GOVERNMENT DRAWINGS. SPECIFICATIONS OR OTHER DATA ARE NOT TO BE USED FOR ANY PURPOSE OTHER THAN THE PROCUREMENT OF THE OPERATION AND MAINTENANCE OF THE GOVERNMENT EQUIPMENT. THE UNITED STATES GOVERNMENT HAS NO RESPONSIBILITY NOR ANY OBLIGATION WHATSOEVER. THE GOVERNMENT MAY HAVE FORMULATED, FURNISHED, OR IN ANY WAY SUPPLIED THE DRAWINGS AND ANY RIGHTS OR PERMISSION TO MANUFACTURE, USE, OR SELL ANY PATENTED INVENTION THAT MAY IN ANY WAY BE RELATED THERETO.

NOTICE - WHEN GOVERNMENT DRAWINGS, SPECIFICATIONS, OR OTHER DATA ARE USED FOR ANY PURPOSE OTHER THAN IN CONNECTION WITH A DEFINITELY RELATED GOVERNMENT PROCUREMENT OPERATION, THE UNITED STATES GOVERNMENT THEREBY INCURS NO RESPONSIBILITY NOR ANY OBLIGATION WHATSOEVER; AND THE FACT THAT THE GOVERNMENT MAY HAVE FORMULATED, FURNISHED, OR IN ANY WAY SUPPLIED THE SAID DRAWINGS, SPECIFICATIONS OR OTHER DATA IS NOT TO BE REGARDED BY IMPLICATION OR OTHERWISE AS IN ANY MANNER LICENSING THE HOLDER OR ANY OTHER PERSON OR CORPORATION, OR CONVEYING ANY RIGHTS OR PERMISSION TO MANUFACTURE, USE, OR SELL ANY PATENTED INVENTION THAT MAY IN ANY WAY BE RELATED THERETO.

REVISIONS			
SYM	DESCRIPTION	DATE	APPROVAL

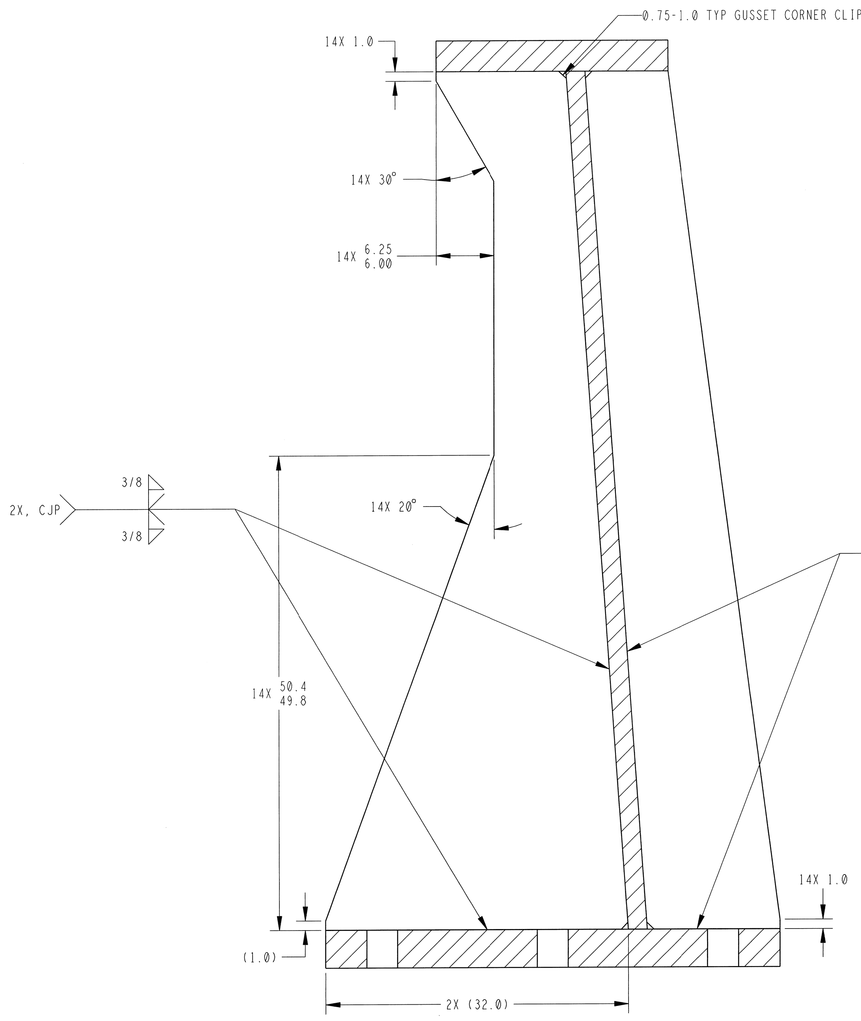

SECTION A-A
SCALE 1/8

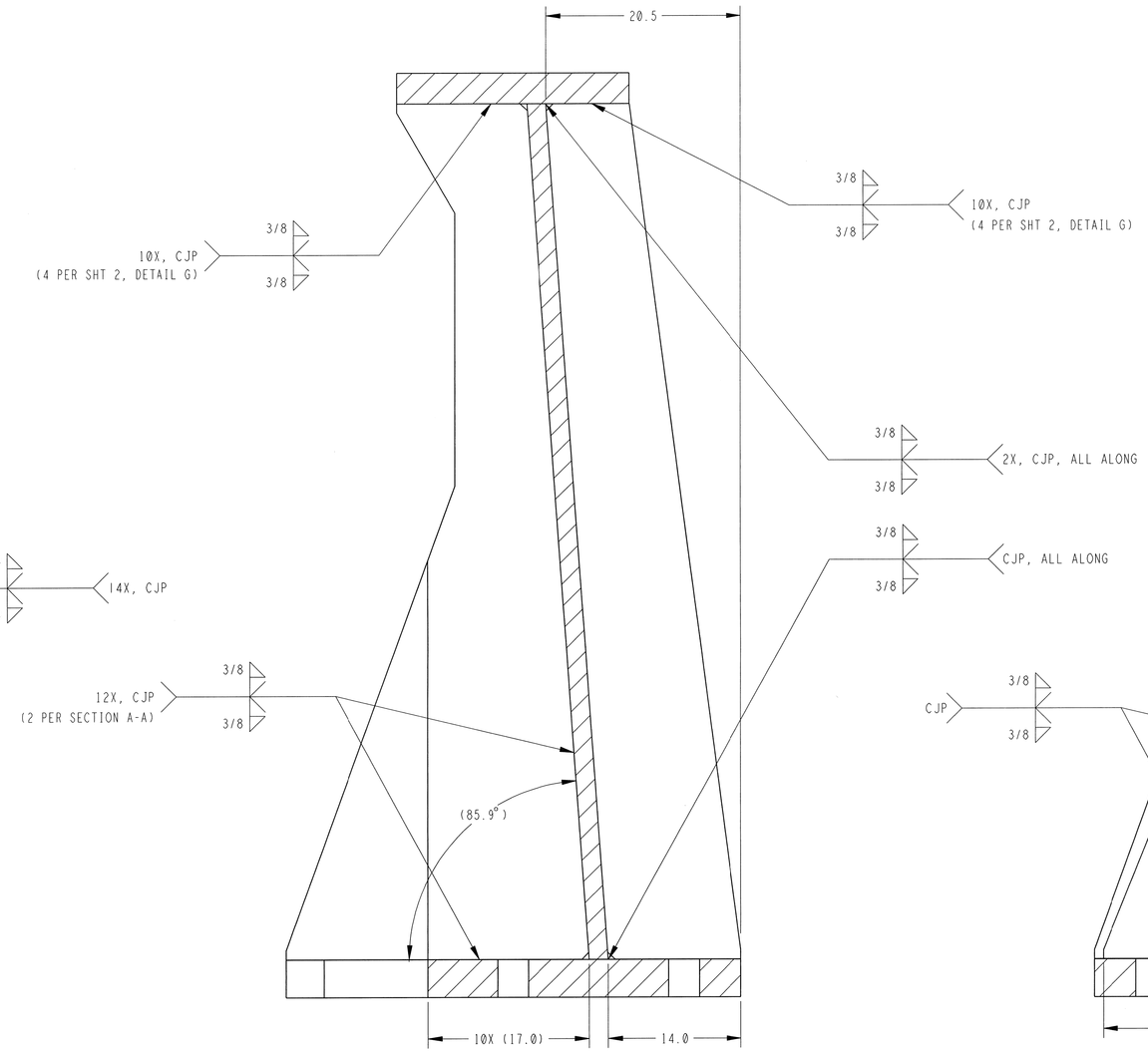

SECTION B-B
(SEE SECTION A-A FOR SIMILAR DETAILS)
SCALE 1/8

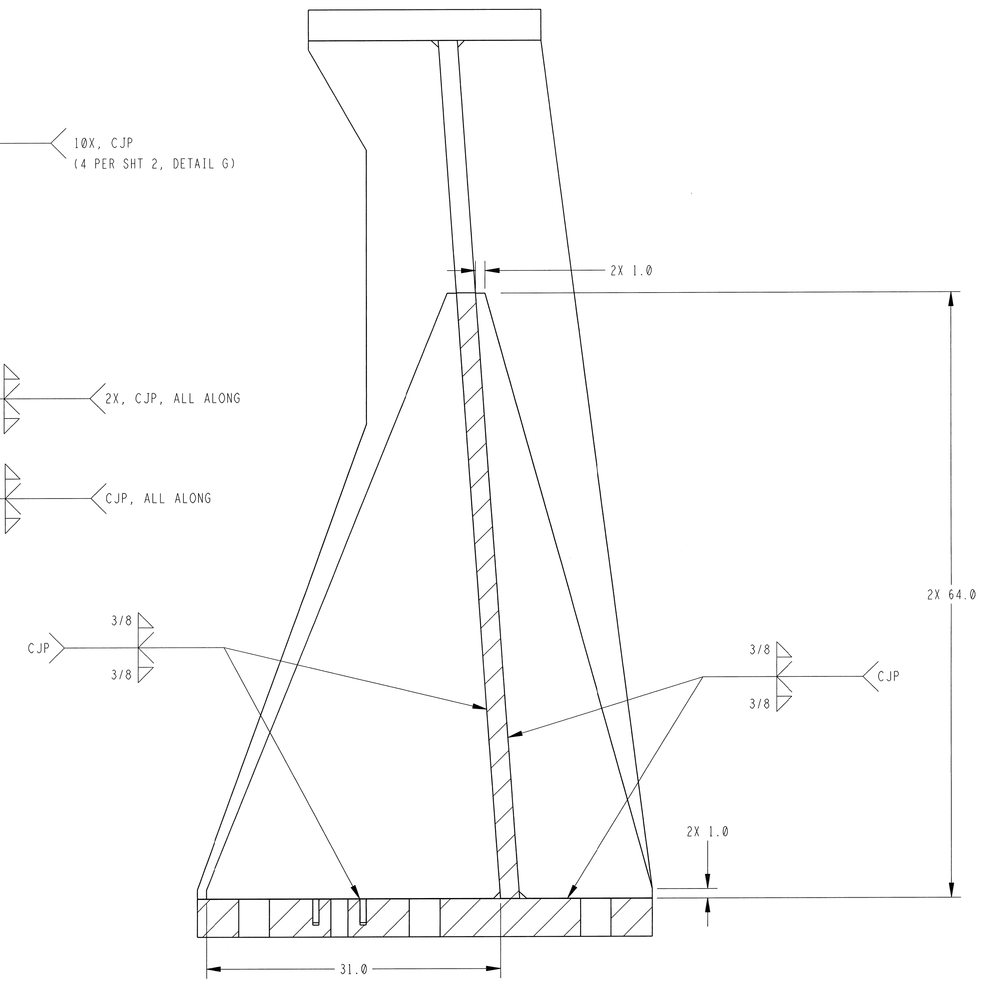

SECTION C-C
(GUSSETS AS DETAILED, 2 PLACES)
SCALE 1/8

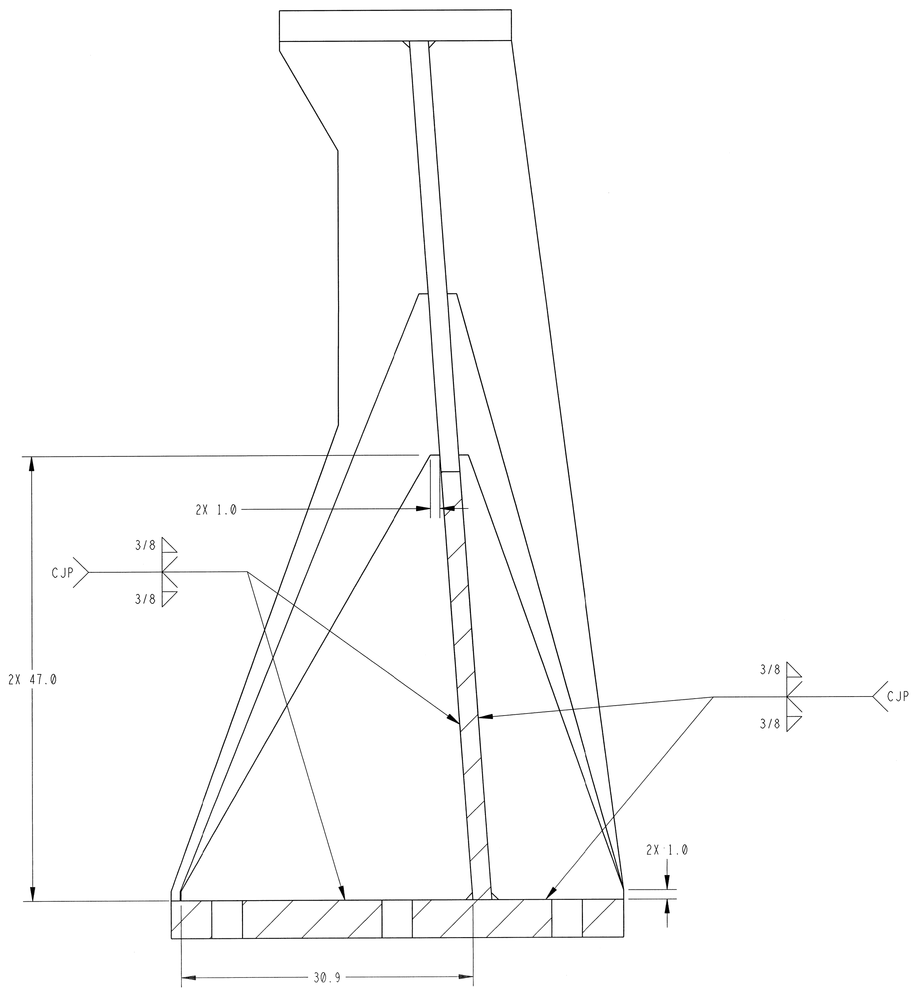

SECTION D-D
(GUSSETS AS DETAILED, 2 PLACES)
SCALE 1/8

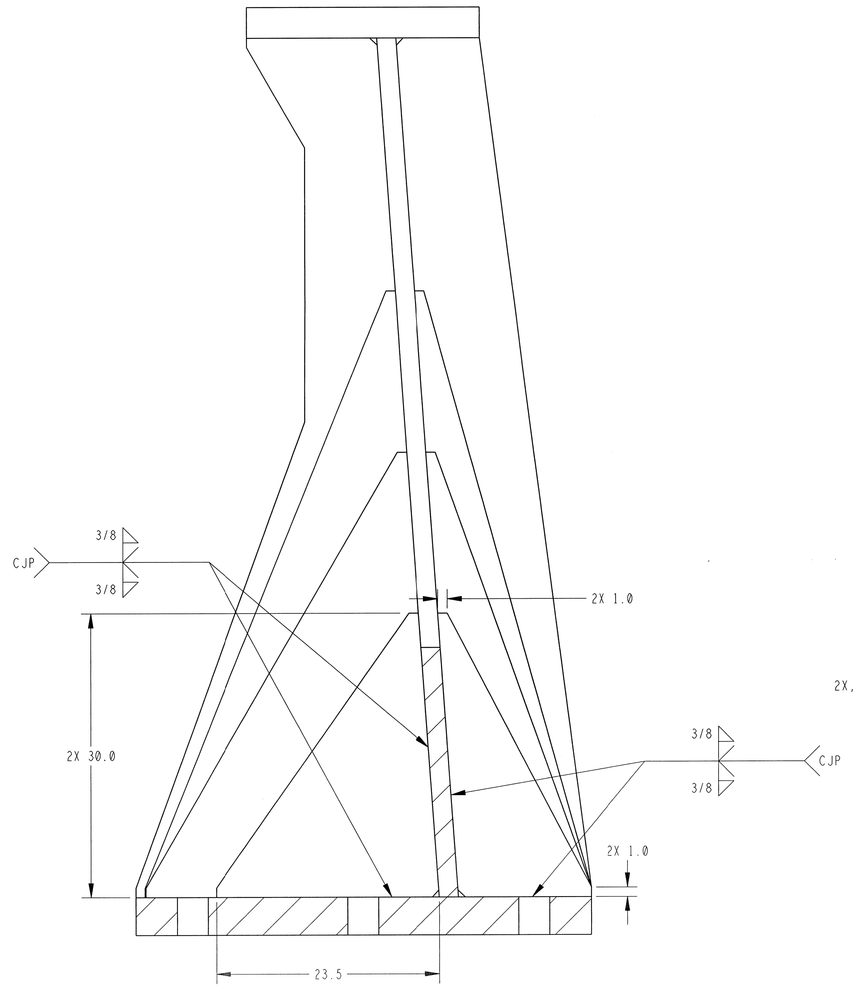

SECTION E-E
(GUSSETS AS DETAILED, 2 PLACES)
SCALE 1/8

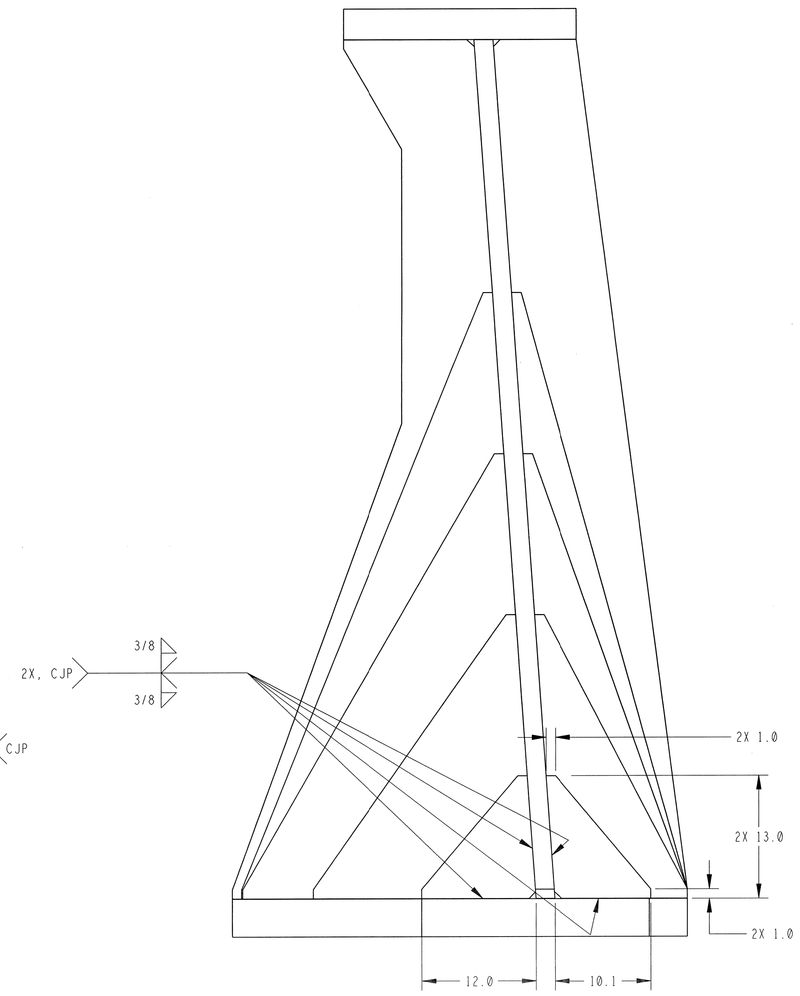

VIEW F-F
(GUSSETS AS DETAILED, 2 PLACES)
SCALE 1/8

APPROVED FOR PUBLIC RELEASE; DISTRIBUTION IS UNLIMITED

WELDMENT,
SRB PX LOADLINE,
FLOOR MOUNTED,
SLS INTERTANK TEST

SPECIAL TEST EQUIPMENT DESIGN BRANCH - ET58
GEORGE C. MARSHALL SPACE FLIGHT CENTER
NATIONAL AERONAUTICS AND SPACE ADMINISTRATION
HUNTSVILLE, ALABAMA

90M14283 — REVISION SEE SHT1

SIZE E — SHEET 3 OF 3