1. MATERIAL: 4340 STEEL PER SAE AMS 6414.
2. 125 Ra ALL MACHINED SURFACES UNLESS OTHERWISE NOTED.
3. METAL STAMP DRAWING PART NUMBER 999906MRA951 ON SPECIFIED SURFACE PER SAE AS478, METHOD 2A2 (ZONE D8).
4. BLACK OXIDE PER MIL-DTL-13924, CLASS 1 WITH OIL.
5. QTY.: (1) REQUIRED
6. ESTIMATED WEIGHT: 184 LBS.

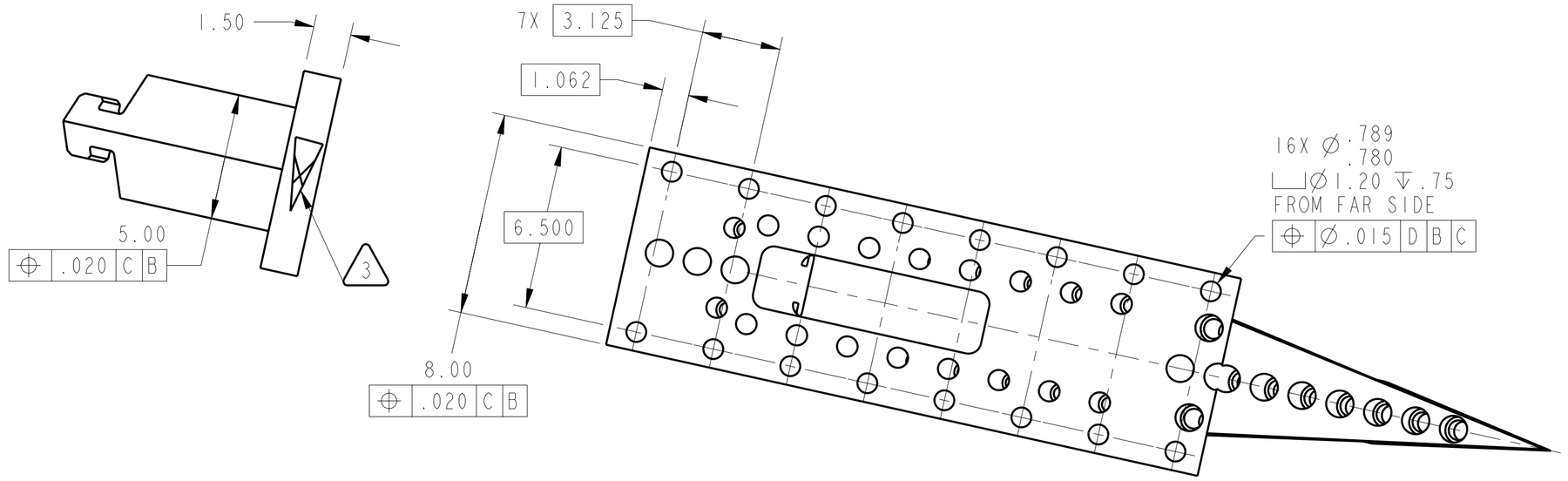

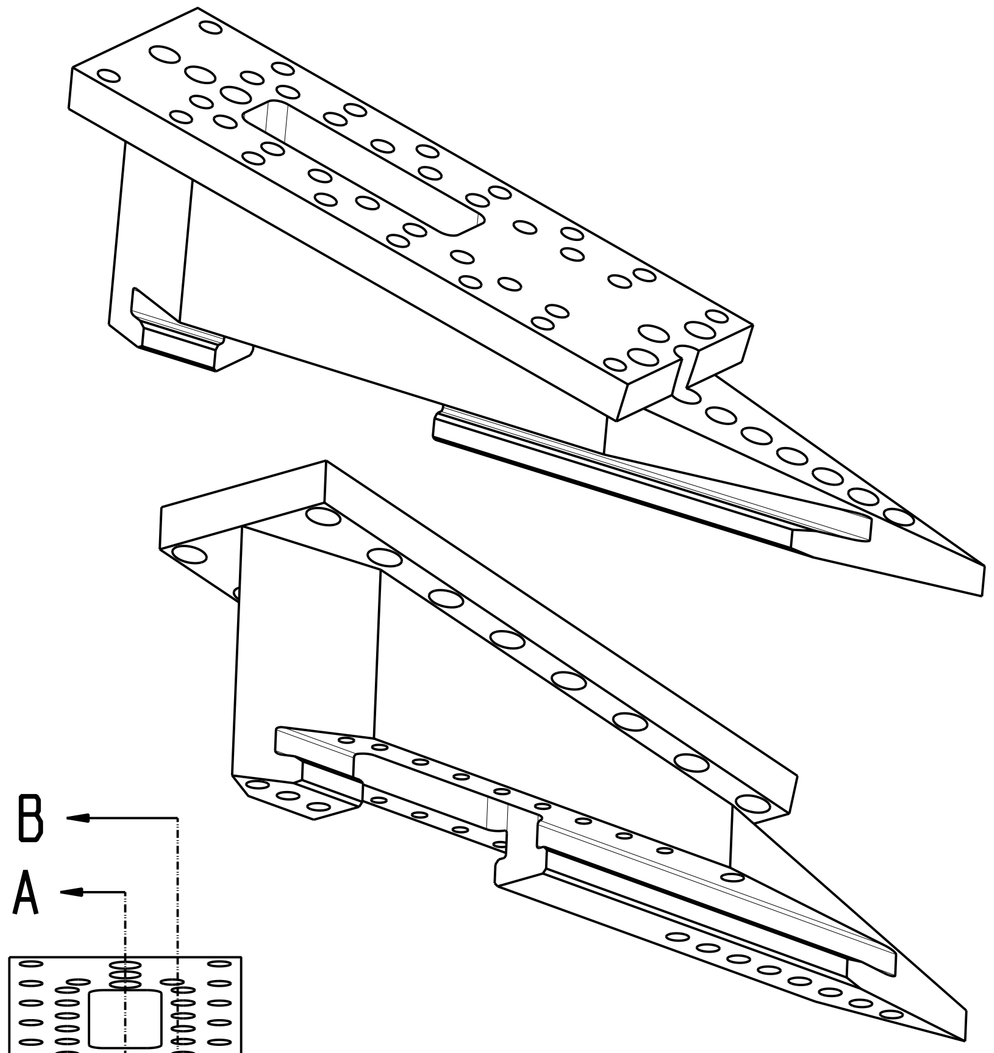

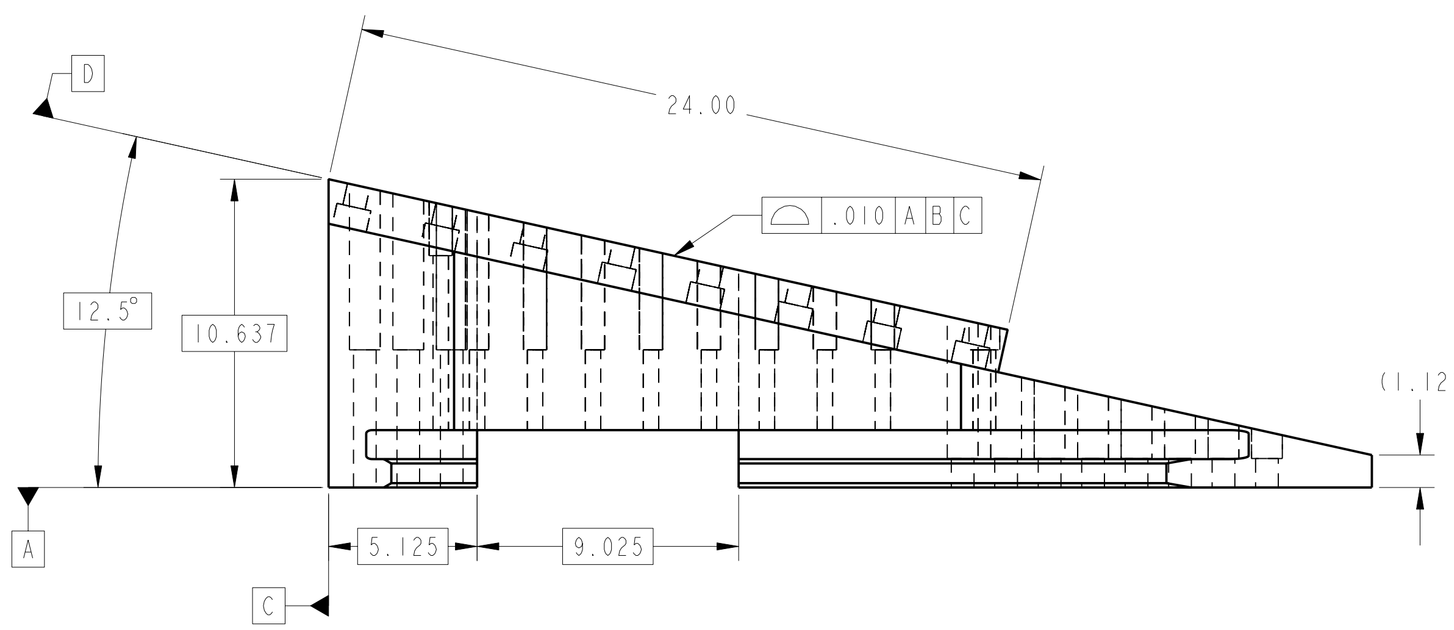

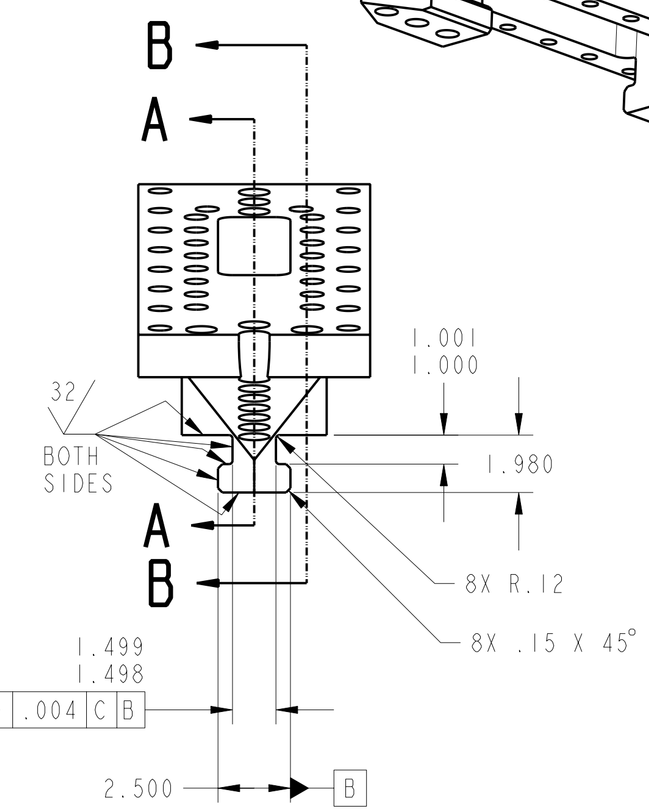

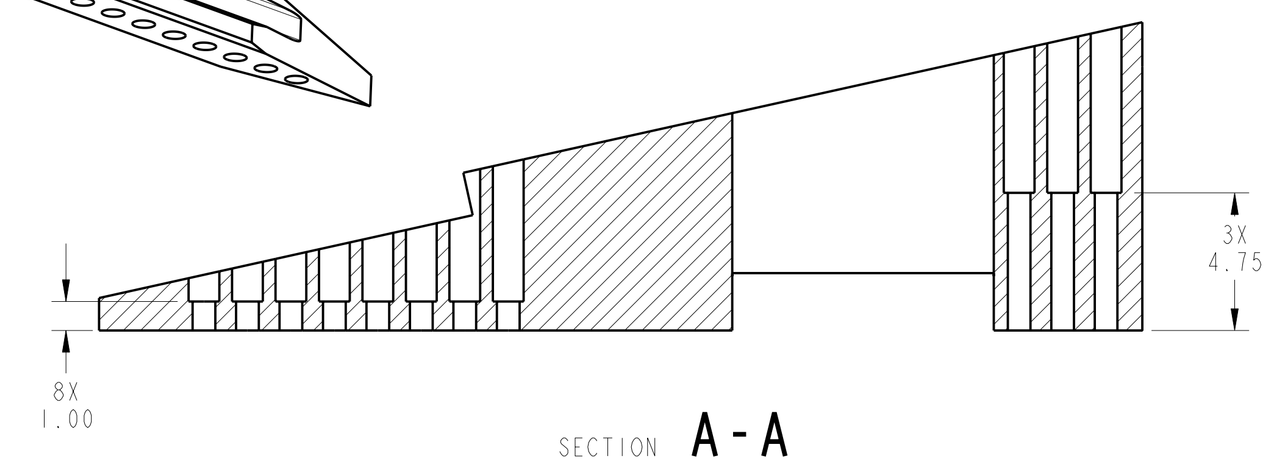

SECTION A-A

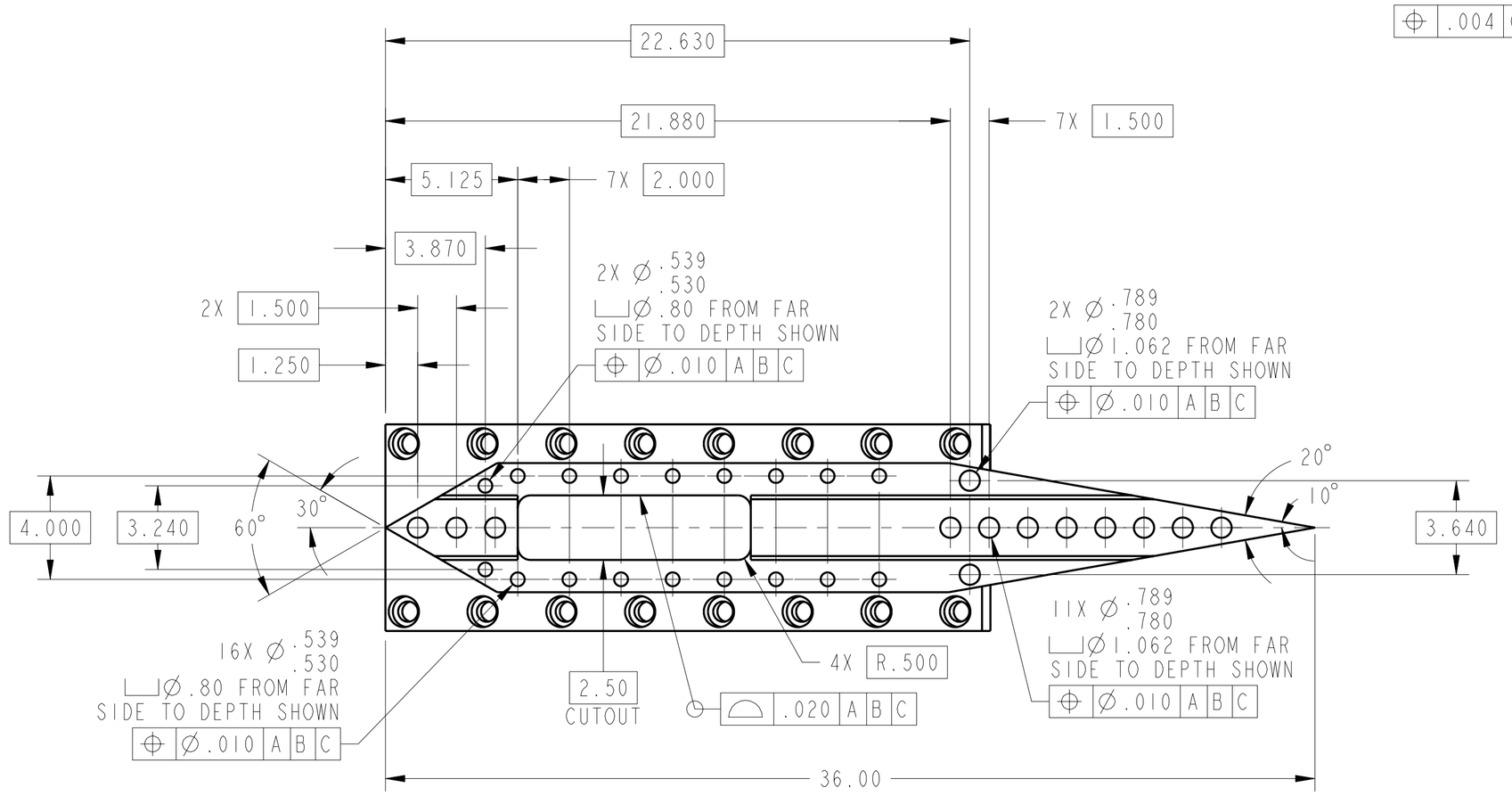

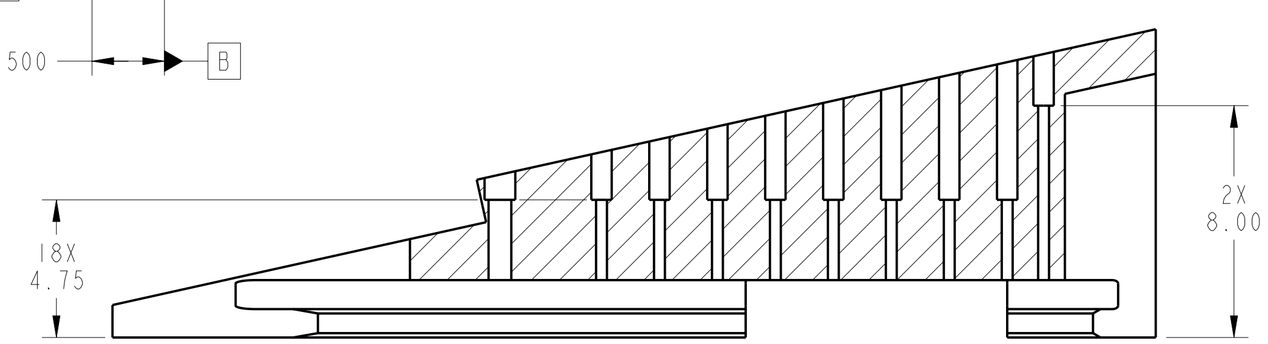

SECTION B-B

CHG	ZONE	DESCRIPTION	APP/DATE
A	D1	REVISED MATL FROM 280 MARAGING TO 4340 STEEL	PN 12/16/14

REVISIONS

PRIOR TO USE VERIFY THE INTENDED PURPOSE IN PDM ("FOR" ATTRIBUTE)

UNLESS OTHERWISE SPECIFIED DIMENSIONS ARE IN INCHES

CONTRACT NNC12BA01B
CONTRACTOR GESS3 TEAM

TOLERANCE ON		TASK ORDER	336
.X	± 0.03	DRAFTER	VNTG/P. NEWMAN
.XX	± 0.01	ENGINEER	VNTG/P. NEWMAN
.XXX	± 0.005	DESIGNER	VNTG/P. NEWMAN
FRACTION	± -	DIMENSIONING AND TOLERANCING PER ASME Y14.5M-1994	
ANGULAR	± 0.50°		
BREAK EDGES	.010-.020		

NATIONAL AERONAUTICS AND SPACE ADMINISTRATION
JOHN H. GLENN RESEARCH CENTER
LEWIS FIELD
CLEVELAND, OHIO

STRUT ROLL MECHANISM
DIRECT MOUNT ASSEMBLY
SUPERSONIC STRUT 999906MRA960

A951 STRUT ROLL MECHANISM
DIRECT MOUNT DOVETAIL
SUPERSONIC STRUT

PDM REL LEVEL: Released PDM REVISION: A
PDM DATABASE: 999906_8x6_Facility_Database
MODEL NAME: 999906MRA951_DIR_MNT_DVTL_SPRS
CHECK FOR ANY OUTSTANDING ECO'S PRIOR TO USE

SIZE	DRAWING NUMBER	REV	BLDG	AREA
D	999906MRA951	A	55	8X6
			UNITS: INCH	
SCALE: 1/4	INITIAL REL DATE XX/XX/XXXX	SHEET 1 OF 1	DISCIPLINE MECHANICAL	

PRO/E VERSION: Wildfire 5.0

REV A
SIZE D DRAWING NUMBER 999906MRA951

NAME:PANEWMAN OBJECT:999906MRA951_DIR_MNT_DVTL_SPRS DATE:30-Dec-14 10:27:03