K0000068044D A.5, RELEASED Verify Latest Revision in KDPMS

NOTICE : WHEN GOVERNMENT DRAWINGS, SPECIFICATIONS, OR OTHER DATA ARE USED FOR ANY PURPOSE OTHER THAN IN CONNECTION WITH A DEFINITELY RELATED GOVERNMENT PROCUREMENT OPERATION, THE UNITED STATES GOVERNMENT THEREBY INCURS NO RESPONSIBILITY NOR ANY OBLIGATION WHATSOEVER; AND THE FACT THAT THE GOVERNMENT MAY HAVE FORMULATED, FURNISHED, OR IN ANY WAY SUPPLIED THE SAID DRAWINGS, SPECIFICATIONS OR OTHER DATA IS NOT TO BE REGARDED BY IMPLICATION OR OTHERWISE AS IN ANY MANNER LICENSING THE HOLDER OR ANY OTHER PERSON OR CORPORATION, OR CONVEYING ANY RIGHTS OR PERMISSION TO MANUFACTURE, USE, OR SELL ANY PATENTED INVENTION THAT MAY IN ANY WAY BE RELATED THERETO.

EAR 99 – NO LICENSE REQUIRED
THE INFORMATION CONTAINED IN THE DOCUMENT IS TECHNICAL IN CONTENT, BUT NOT TECHNICAL DATA AS DEFINED BY THE INTERNATIONAL TRAFFIC IN ARMS REGULATIONS (ITAR) OR THE EXPORT ADMINISTRATION REGULATIONS (EAR) AND THEREFORE NO DOD OR EXPORT LICENSE REQUIRED. (GENERAL PROHIBITION 3(A (EMBARGO) APPLIES TO ALL ITEMS SUBJECT TO THE EAR, (I.E., ITEMS ON THE CCL AND WITHIN EAR 99 NLR). YOU MAY NOT MAKE AN EXPORT OR RE-EXPORT (CONTRARY TO THE PROVISIONS OF PART 746 (EMBARGOS AND OTHER SPECIAL CONTROLS) OF THE EAR AND 22 CFR PARTS 120-130 OF THE ITAR).
ITAR 99 – NO LICENSE REQUIRED
NASA KSC EXPORT CONTROL OFFICE – 321-867-6209

REVISION HISTORY			
REV	DESCRIPTION	DATE	APPROVAL
A	SEE R-CN-19177		A.C.LITTLEFIELD

NOTES:

GENERAL

1A. THIS DRAWING PROVIDES THE PHYSICAL DIMENSIONS AND PARTS LIST FOR PIPE SPOOL ASSEMBLY. REFER TO PROCUREMENT SPECIFICATION K0000190546-SPC FOR TECHNICAL, FABRICATION, TEST AND INSPECTION REQUIREMENTS.

1B. FLEX HOSE REFERENCE DESIGNATOR NUMBER IS 2040.

1C. REMOVE SCALE AND BURRS AND BREAK SHARP CORNERS AND EDGES.

1D MAKE FROM ASME B16.5 BLIND FLANGE. MATERIAL SHALL BE DUAL GRADE F316/316L PER ASTM A182.

1E MAKE FROM ASME B16.9, NPS 8, SCHED 80S, LONG PATTERN, LAP JOINT STUB END. STUB END SHALL BE CONCENTRICALLY SERRATED PER DETAIL C.

1F AFTER WELDING, VERIFY FITTING AAB1002-4K.750-40 HAS A ∅ .355 MINIMUM THRU HOLE FOR TEMPERATURE TRANSDUCER CLEARANCE. IF REQUIRED, MACHINE THRU HOLE TO ∅ .355 - ∅ .370.

1G INDICATED DIMENSIONS ARE AS MEASURED UNDER THE CONDITIONS SPECIFIED IN K0000190546-SPC. PARAGRAPH 4.2.1.2.

1H MAKE FROM SCHED 80S PIPE.

1J ADJUST AS REQUIRED TO MEET THE DIMENSION IN DETAIL A.

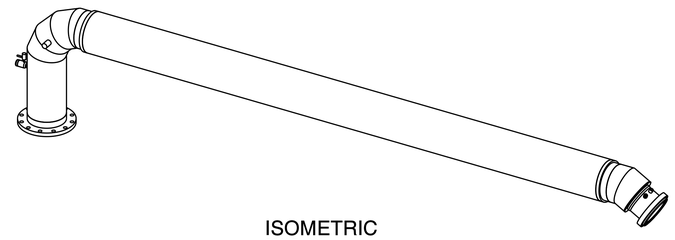

ISOMETRIC
SCALE .063

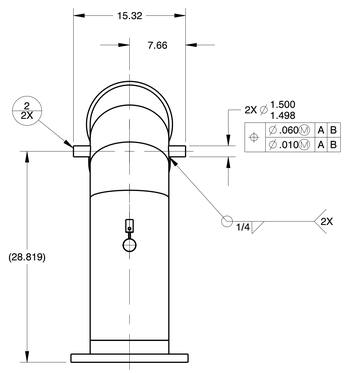

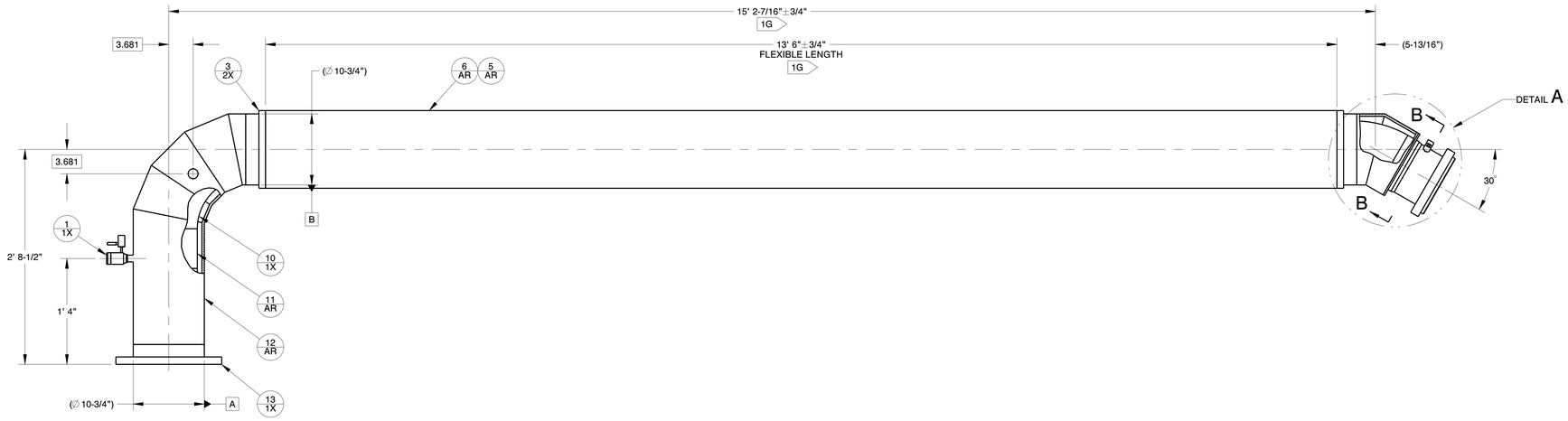

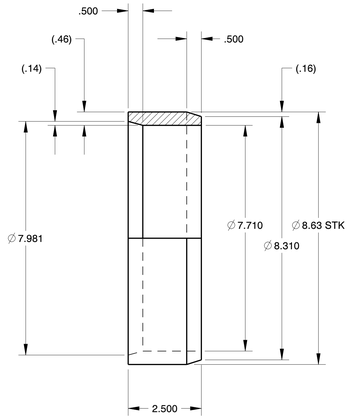

1H K0000068044-P008
SCALE .500

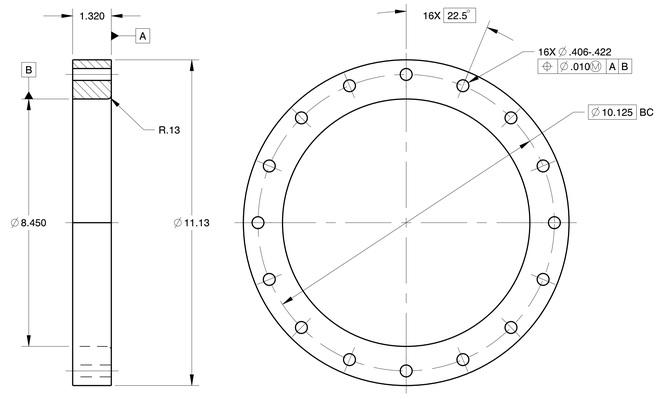

1D K0000068044-P006
SCALE .500

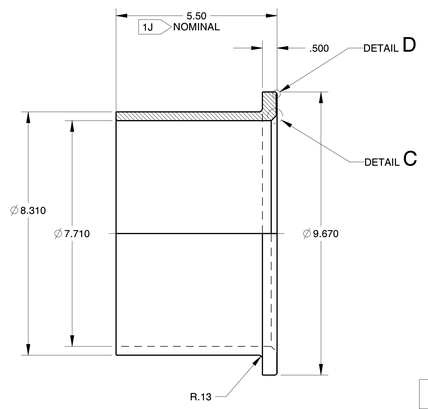

1E K0000068044-P007
SCALE .500

QTY	ZONE	FIND NO OR ITEM NO	MFR CODE	PART OR STOCK NO	DESCRIPTION
2		15	06581	AAB1001-4K8.00-40	WELD FITTING, FEMALE BOSS TO SADDLE
1		14	22264	K0000068044-P009	ELBOW, LONG RADIUS, B16.9, SCHED 40
1		13	22264	KT00388-08D0010D00	CRYOGENIC FEMALE BAYONET, FLANGED, 8X10
AR		12	22264	KT00378-10D00040S4	PIPE, NPS 10, SCHED 40S
AR		11	22264	KT00378-08D00040S4	PIPE, NPS 8, SCHED 40S
1		10	22264	KT00104-40SS08D00	ELBOW, 90 DEG, LONG, B16.9, SCHED 40
1		9	22264	K0000068044-P008	ADAPTER
1		8	22264	K0000068044-P007	STUB END, LAP JOINT, CONCENTRICALLY SERRATED
1		7	22264	K0000068044-P006	FLANGE, LAPPED
AR		6	22264	K0000068044-P005	FLEXIBLE HOSE, 10 INCH
AR		5	22264	K0000068044-P004	FLEXIBLE HOSE, 8 INCH
1		4	22264	K0000068044-P003	PLATE
2		3	22264	K0000068044-P002	PIPE TO HOSE TRANSITION, 8X10
2		2	22264	K0000068044-P001	BAR, ROUND
1		1	22264	79K14672-3	ASSEMBLY, VACUUM VALVE

PARTS LIST

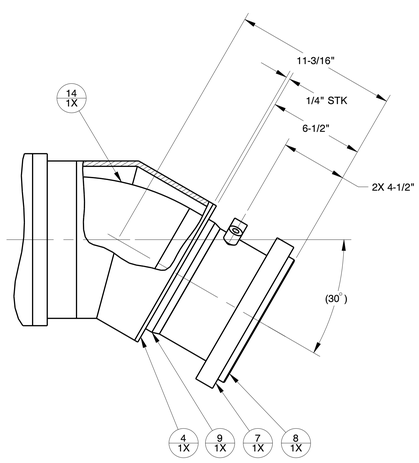

DETAIL A
SCALE .250

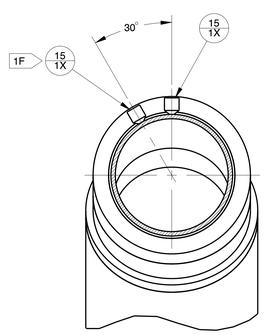

VIEW ROTATED 30° CCW

SECTION B-B
SCALE .250

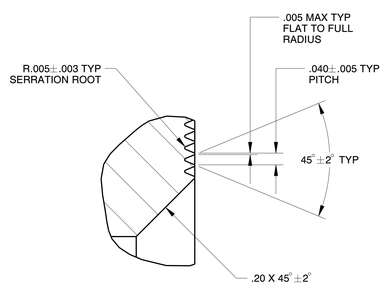

DETAIL C
SCALE 5.000

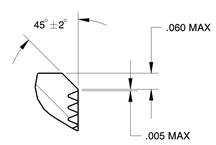

DETAIL D
SCALE 5.000

PROCUREMENT CONTROL DRAWING

CAD MAINTAINED. CHANGES SHALL BE INCORPORATED ONLY BY THE DESIGN ACTIVITY.		
SOFTWARE: CREO PARAMETRIC 2.0		
FILENAME: K0000068044D		
MATERIAL: NOTED	K0000065450	SLS ML
HEAT TREATMENT: NONE	NEXT ASSY	USED ON
FINAL PROTECTIVE FINISH: NONE	APPLICATION	

UNLESS OTHERWISE SPECIFIED DIM ARE IN INCHES. INTERPRET DIM AND TOL PER ASME Y14.5-2009. TOLERANCES ON:
FRACTIONS ± 1/16 | DECIMALS 1 PL ±.1, 2 PL ±.03, 3 PL ±.010 | ANGLES ±1°

THIRD ANGLE PROJECTION

ORIGINAL DATE OF DRAWING (YYYY/MM/DD)	2013/08/16
DRAFTSMAN: S. A. BRYANT	CHECKER: J. T. POLLOCK
ENGINEER: F. B. TRIMBOLI	CHECKER: L. C. KAYLOR
ENGINEER: V. J. WARD	STRESS: L. C. KAYLOR
ENGINEER: C. T. O'CONNOR	
SUBMITTER: T. O. ADAMS	
APPROVED: A. C. LITTLEFIELD	

JOHN F. KENNEDY SPACE CENTER, NASA
KENNEDY SPACE CENTER, FLORIDA

FLEX HOSE 8 X 10, VACUUM JACKETED, LIQUID HYDROGEN FILL

SIZE	CAGE CODE	DWG NO	REV
E	22264	K0000068044	A
SCALE .125	UNIT WEIGHT 685.60	SHEET 1 OF 1	

K0000068044D (A.5) RELEASED Verify latest version prior to use