NOTES: UNLESS OTHERWISE SPECIFIED

1. PRIMARY DIMENSIONS ARE METRIC (MM) AND SECONDARY DIMENSIONS ARE ENGLISH (INCHES) IN BRACKETS.

2. FABRICATE FROM 6061-T651 ALUMINUM ALLOY.
   A) YIELD STRESS 40 KSI MINIMUM.
   B) ULTIMATE STRESS 45 KSI MINIMUM.
   C) TENSILE MODULUS 10000 KSI MINIMUM.

3. OPTIC REQUIREMENTS:
   A) 1/2 WAVE PV SURFACE FIGURE
   B) SURFACE ROUGHNESS 10 NM
   C) 60/40 SCRATCH DIG

4. INSTALL ENGLISH THREADED INSERT IAW MS33537, AFTER SURFACE TREATMENT. BREAK AND REMOVE DRIVING TANG.

5. BAG AND TAGE WITH PART NUMBER "BACAR206".

REVISION				
REV	ZONE	DESCRIPTION	DATE	APPROVAL
-	-	INITIAL RELEASE	-	-

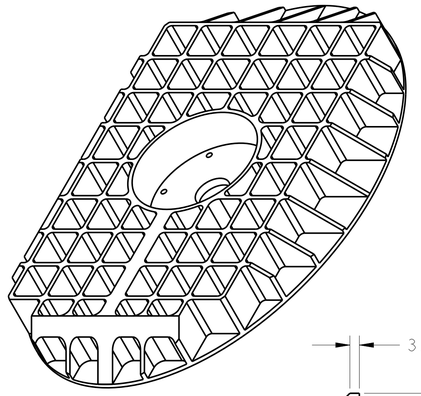

ISO VIEW FOR REFERENCE ONLY

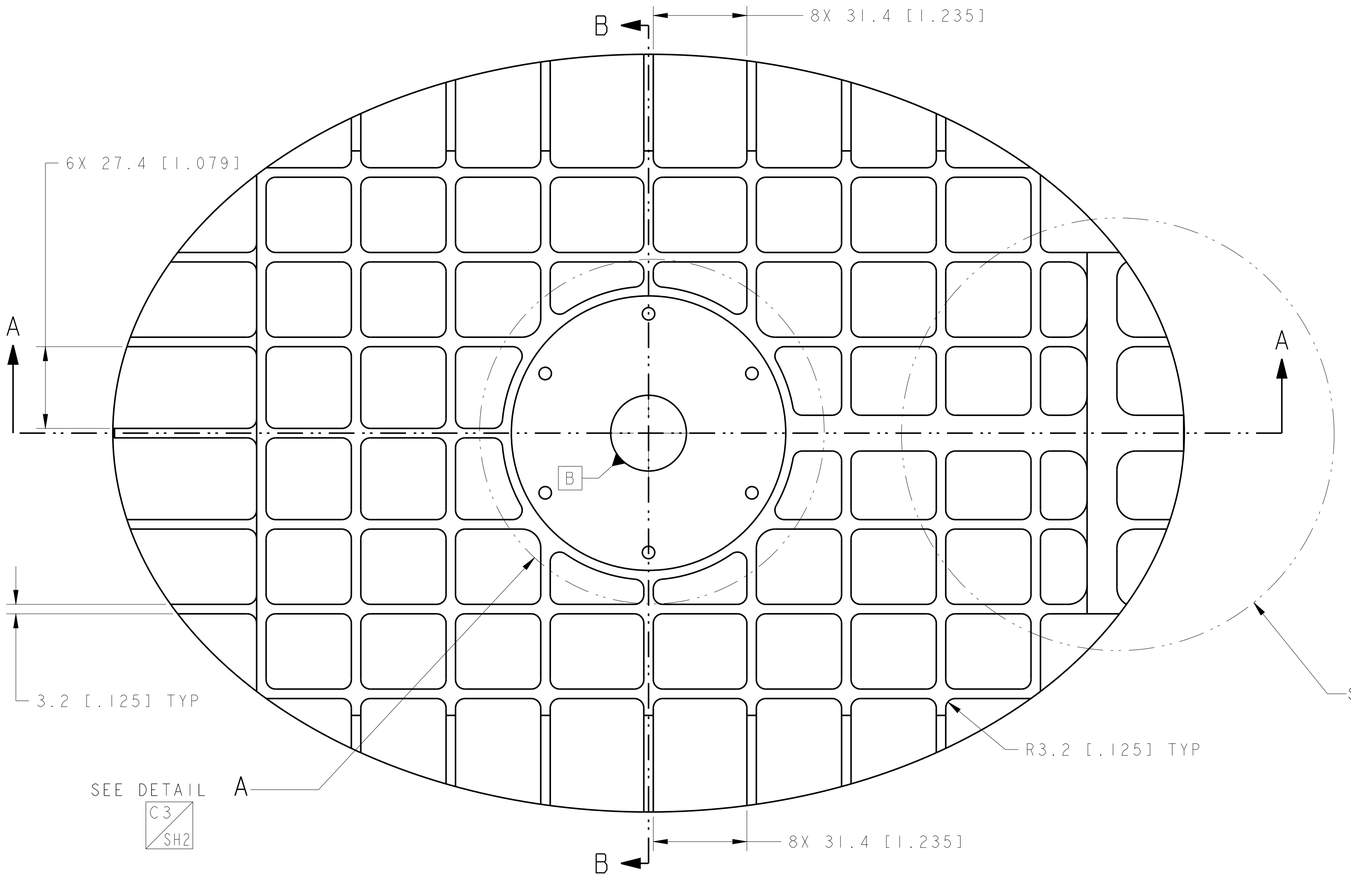

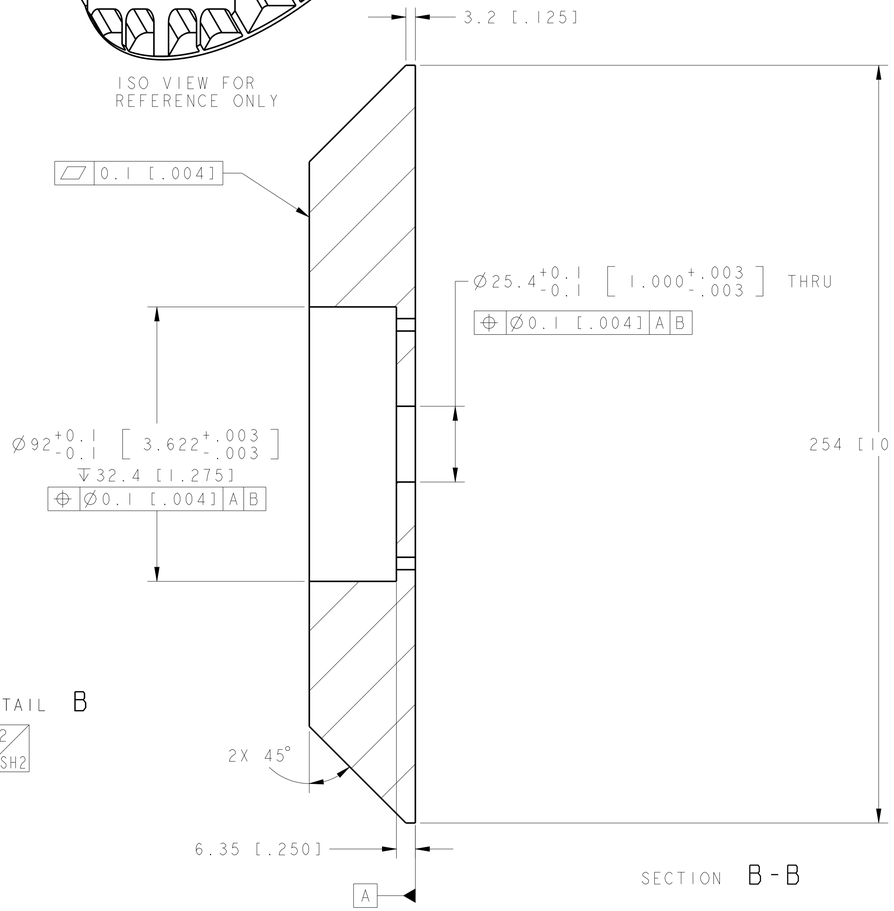

SECTION B-B

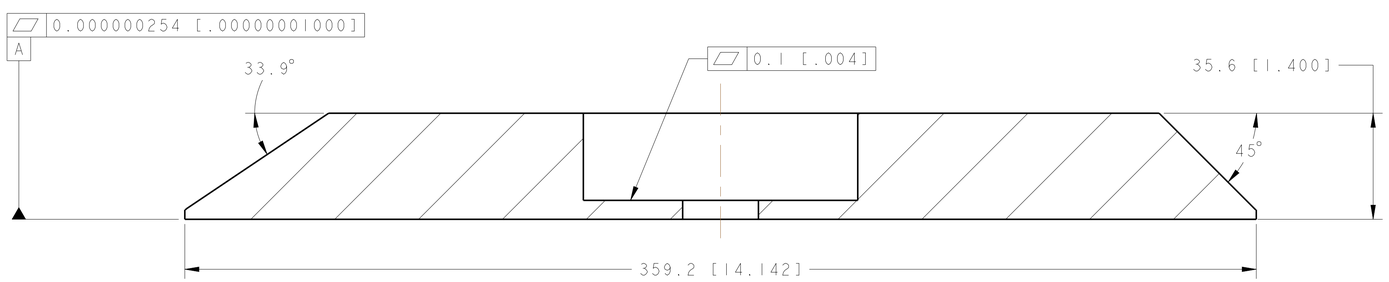

SECTION A-A

ITEM NO.	REQD	REQD	PART NO.	DESCRIPTION	MATERIAL	MAT'L SPEC OR CAGE CODE
1		6	3585-3CN246	8-32 SCREW LOCK HELICOIL INSERT .246 IN LONG	STAINLESS STEEL	
—		X	BACAR206	ALUMINUM PLATE OR SHEET	6061-T651 AL ALY	SEE NOTE 2 (DRAWING BACAR201

LIST OF MATERIAL

THIRD ANGLE PROJECTION

HARDWARE CLASSIFICATION B

INCH / HYBRID METRIC/INCH / METRIC

INCH DRAWING DIMENSIONS ARE IN INCHES, UNLESS OTHERWISE SPECIFIED
REMOVE ALL BURRS AND SHARP EDGES R.010 OR CHAMFER MAX.
TOLERANCES FOR INCH:
.XX ±.02 .XXX ±.005 ∠ ±.5° X/X ± 1/16
125 FINISH IN µIN

METRIC DRAWING DIMENSIONS ARE IN MM, UNLESS OTHERWISE SPECIFIED
REMOVE ALL BURRS AND SHARP EDGES R0.25 OR CHAMFER MAX.
TOLERANCES FOR METRIC:
X.X ±0.1 X ±0.2 XX ±0.3 ∠ ±0.5°
XXX ±0.8 XXXX ±1.5
3.2 FINISH IN µM

NATIONAL AERONAUTICS AND SPACE ADMINISTRATION

Goddard Space Flight Center

GREENBELT, MD [X] WALLOPS ISLAND, VA [ ]

NAME	INIT.	DATE
DESIGNED B.JAMES	BJ	
DRAWN B.JAMES	BJ	
CHECKED B.JAMES	BJ	
APPROVED - MECH SYSTEMS B.JAMES	BJ	
APPROVED - OPTIC SYSTEMS B.PASQUALE	BP	
APPROVED - SYSTEMS J.SMITH	JS	
APPROVED - PDL C.GATEBE	CG	

DRAWING INTERPRETED PER 500-PG-8700.2.5

TITLE

SCAN MIRROR, SCAN MIRROR ASSEMBLY, BACAR ASSEMBLY

SOFTWARE:	Pro/ENGINEER CREO 2.0
FILE LOCATION:	BACAR
DRAWING FILE:	BACAR206 REV .0
MODEL FILE:	BACAR206 REV .0

NEXT ASSY	USED ON
-	-
BACAR300	BACAR

SIZE D | CAGE CODE 36FC1 | DWG NO. BACAR206 | REV

SCALE: 1/2 | SHEET: 1 OF 2

GSFC 4-48 (8/07)

FOLD LINE

BACAR206

REVISION				
REV	ZONE	DESCRIPTION	DATE	APPROVAL
-	-	SEE SHEET ONE FOR REVISIONS	-	-

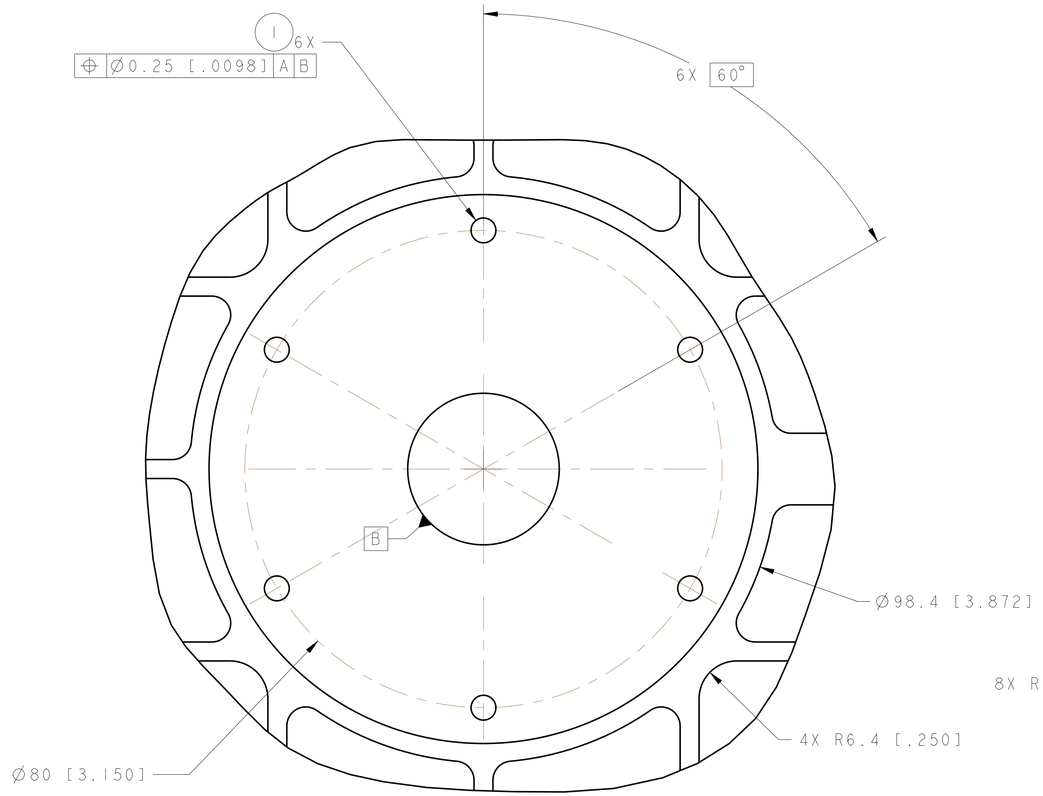

DETAIL A
SCALE 2/1

C3/SH1

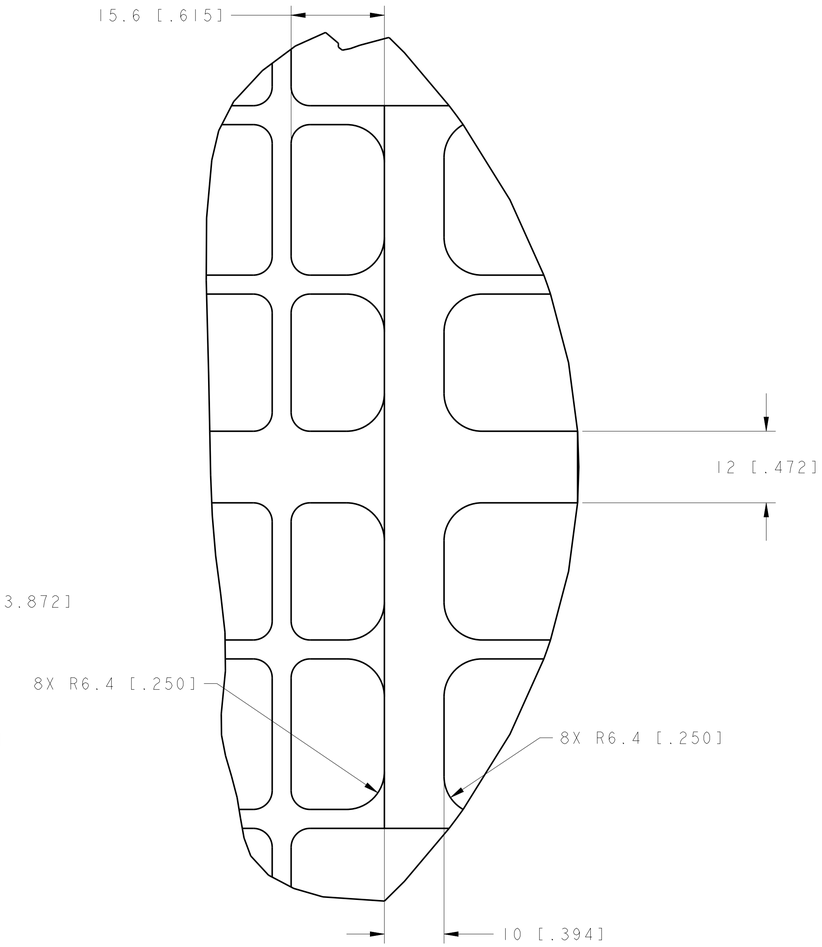

DETAIL B
SCALE 2/1

C3/SH1

TITLE			
title_1, title_2, title_3			
SIZE D	CAGE CODE: 36FC1	DWG NO. BACAR206	REV
SCALE: 1/2		SHEET: 2 OF 2	

GSFC 4-48 (8/07)

FOLD LINE

BACAR206