NOTES: UNLESS OTHERWISE SPECIFIED

1. PRIMARY DIMENSIONS ARE METRIC (MM) AND SECONDARY DIMENSIONS ARE ENGLISH (INCHES) IN BRACKETS.

2. FABRICATE FROM 7075-T6351 ALUMINUM ALLOY.
   A) YIELD STRESS 57 KSI MINIMUM.
   B) ULTIMATE STRESS 67 KSI MINIMUM.
   C) TENSILE MODULUS 10400 KSI MINIMUM.

3. OPTIC REQUIREMENTS:
   A) 1/2 WAVE REFLECTED WAVEFRONT
   B) SURFACE ROUGHNESS 10 NM
   C) 60/40 SCRATCH DIG

4. DIMENSIONS APPLY AFTER PLATING AND SURFACE FINISH.

5. INSTALL ENGLISH THREADED INSERT IAW MS33537, AFTER SURFACE TREATMENT. BREAK AND REMOVE DRIVING TANG.

6. BAG AND TAGE WITH PART NUMBER "BACAR206".

REV SYM	DESCRIPTION	DATE	APPROVAL
-	INITIAL RELEASE		

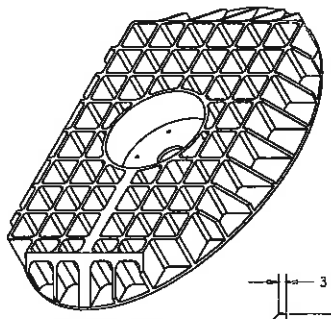

ISO VIEW FOR REFERENCE ONLY

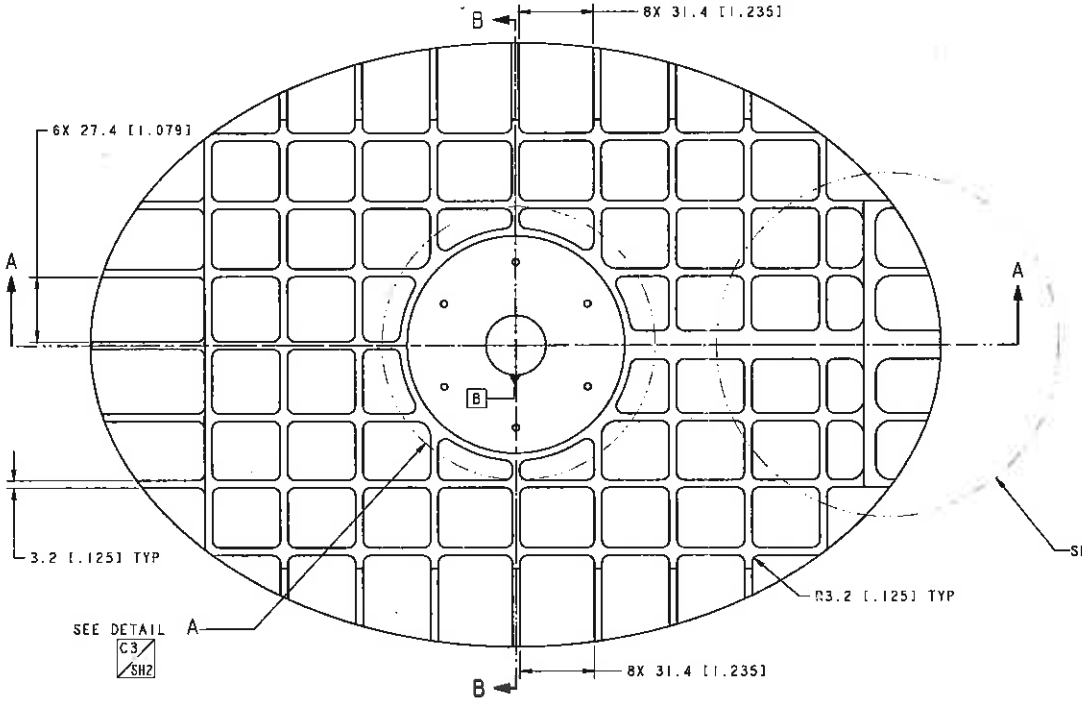

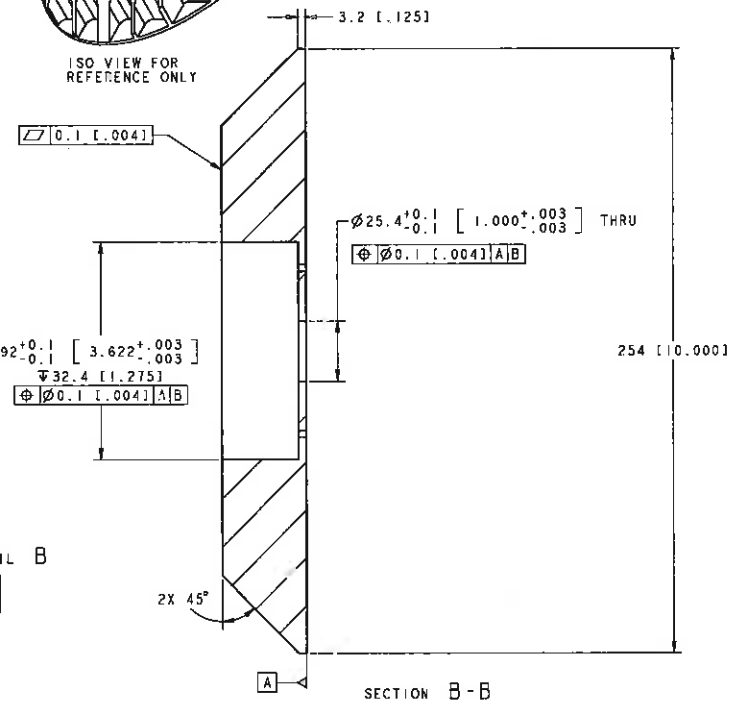

SECTION B-B

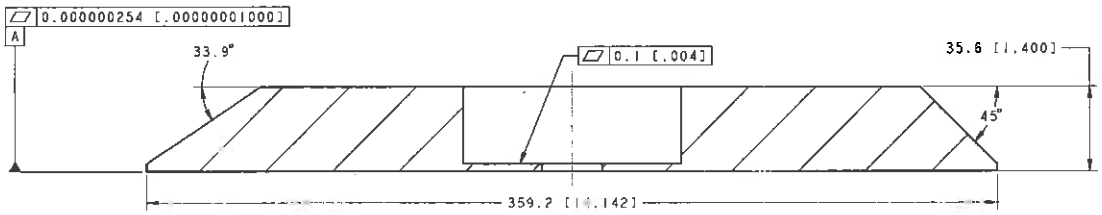

SECTION A-A

ITEM NO.	REQD	RCOD	PART NO.	DESCRIPTION	MATERIAL	MAT'L SPEC OR CAGE CODE
	6		3585-04CN112	4-40 SCREW LOCK HELICOIL INSERT .112 IN LONG	STAINLESS STEEL	
			BACAR206	ALUMINUM PLATE OR SHEET	7075-T6351 AL ALY	SEE NOTE 2 (DRAWING BACAR201)

LIST OF MATERIAL

THIRD ANGLE PROJECTION — INCH / HYBRID METRIC/INCH / METRIC

HANDBARE CLASSIFICATION: B

TOLERANCES FOR INCH: .125 — .XX ±.02, .XXX ±.005, ∠ ±.5°, X/X ± 1/16, FINISH 16 μin
UNLESS OTHERWISE SPECIFIED ALL DIMENSIONS ARE IN DECIMAL INCHES
ROUND ALL CORNERS AND SHARP EDGES 0.010 OR CHAMFER 0.010

TOLERANCES FOR METRIC: 3.2 — X.X ±0.1, X ±0.2, XX ±0.3, ∠ ±0.5°, XXX ±0.0, XXXX ±1.5, FINISH 0.4 μm

Goddard Space Flight Center — ORIGINATOR: NO. — DRAWING INTERPRETED PER 500-PG-8700.2.5

	NAME	INIT.	DATE
RESEARCH	B.JAMES	BJ	
DESIGN	B.JAMES	BJ	
MECHANICS	S.JAMES	SJ	
APPROVER - MECH SYSTEMS	B.JAMES	BJ	
APPROVER - OPTICS DESIGN	S.PASQUALE	SP	
APPROVER - SYSTEMS	J.SMITH	JS	
APPROVER - PM	C.GATEBE	CG	

TITLE: SCAN MIRROR, SCAN MIRROR ASSEMBLY, BACAR ASSEMBLY

SOFTWARE: Pro/ENGINEER CREO 2.0
FILE LOCATION: BACAR
DRAWING FILE: BACAR206 REV .0
MODEL FILE: BACAR206 REV .0

NEXT ASSY	USED ON
BACAR300	BACAR

SIZE: D — CODE IDENT NO.: 36FC1 — DWG NO.: BACAR206 — REV: — SCALE: 1/2 — SHEET: 1 OF 2

BACAR206

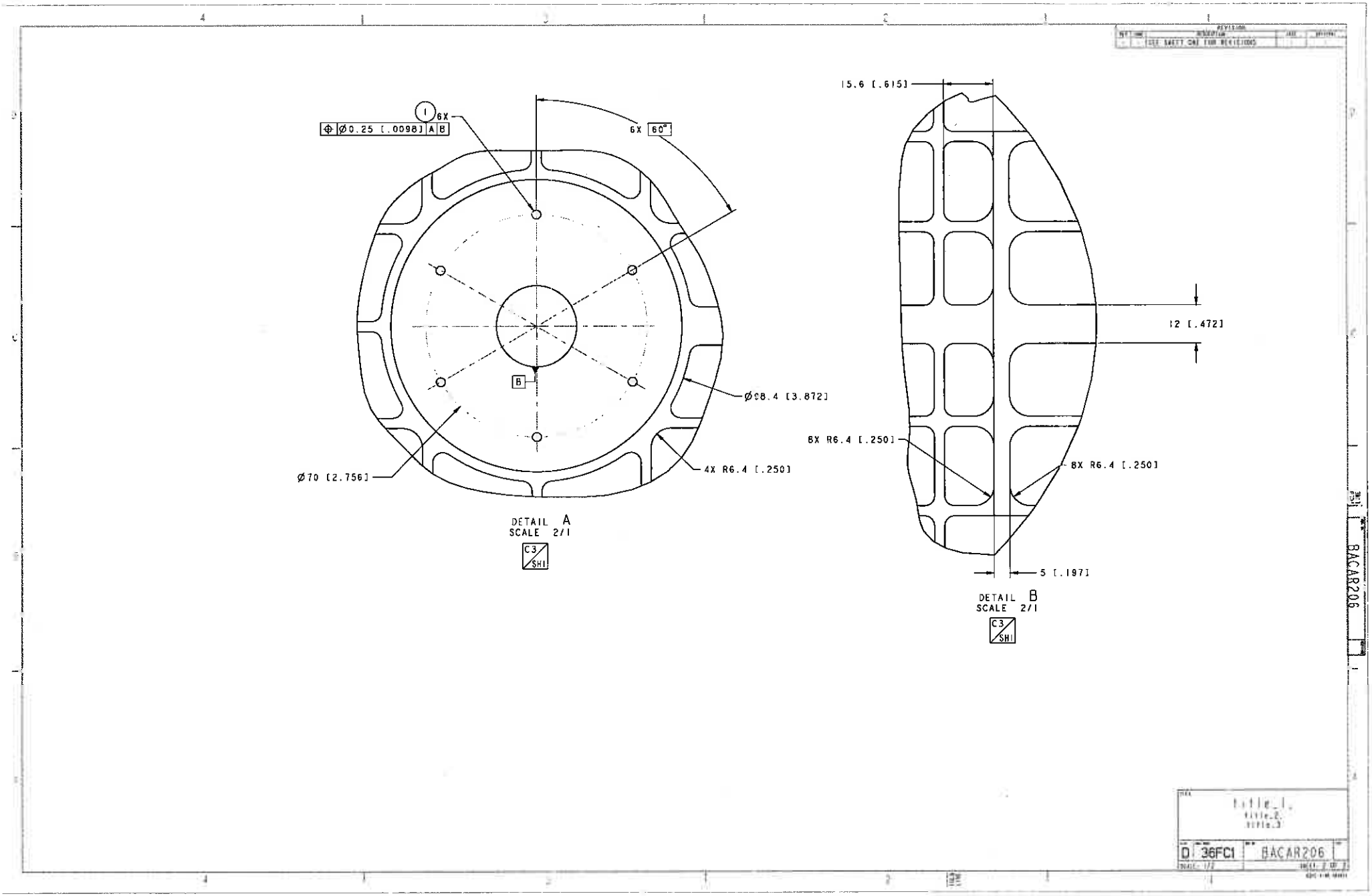

REVISION
SEE SHEET ONE FOR REVISIONS
1 6X
Ø0.25 [.0098] A B
6X 60°
B
Ø98.4 [3.872]
Ø70 [2.756]
4X R6.4 [.250]
DETAIL A
SCALE 2/1
C3 SH1
15.6 [.615]
12 [.472]
8X R6.4 [.250]
8X R6.4 [.250]
5 [.197]
DETAIL B
SCALE 2/1
C3 SH1
BACAR206
title_1
title_2
title_3
D 36FC1 BACAR206