REVISION PAGE

REV. NO. 1

PAGE	DESCRIPTION	APPROVAL
Signature Page	Corrected the spelling of CONCURRENCE. Changed "CONCURRANCE" to "CONCURRENCE".	
Pages 3, 4	Section 1 – LH PUMP – PART 1 – General Subpart 1.2 REFERENCES Removed all dates from the definitions of the Standards and added "(latest edition)" at the end of each.	
Page 6	Subpart 1.3 SUBMITTALS Under SD-03 Product Data: Changed "Radiographs and reader sheets." to read "Radiographs and reader sheets shall be supplied for review and approval by NASA."	
Page 7	Under SD-05 Design Data – Item b. – Changed ASME B31.3 (piping) to read ASME Section IX. Under SD-06 – Item e. – Changed sentence to read: Copies of all final NDE testing, inspection and examination results including but not limited to radiographs, reader sheets, MT/PT reports, pressure reports, cleaning, etc. Part 3 Execution Subpart 3.1 QUALITY CONTROL AND QUALITY ASSURANCE	
Page 18	Seventh paragraph: Inserted row under Item 2 reading "Item 3", "Cleaning and dew point inspections" under the Surveillance column and "Verification" under the Type column; which caused the old Items 3 and 4 to become Items 4 and 5.	

SPECIFICATION FOR PROCUREMENT OF
LIQUID HYDROGEN CRYOGENIC PUMP
AND PUMP SKID
11CDK-GM09
REVISION 1
NOVEMBER, 2013

PREPARED BY:

Doug Dike
Mechanical Engineer
Jacobs-FOSC

SUBMITTED BY:

Mike Easley
Design Engineering Manager
O&M Test Group
Jacobs-FOSC

APPROVED:

Karma Snyder
NASA

APPROVED:

John Pazos
NASA
E&TD Design Lead

CONCURRENCE:

John Bakker
NASA
Facility Manager

CONCURRENCE:

L. Haynes Haselmaier, Sr.
E&TD Sustaining Engineer
MRC/USM

APPROVED

Son Le
NASA

CONCURRENCE:

Amy Rice
NASA Safety

PREPARED BY:
Jacobs Technology
Stennis Space Center

Table of Contents

SECTION 1 LH PUMP 3

Part 1 General 3
1.1 SCOPE OF WORK 3
1.2 REFERENCES 3
1.3 SUBMITTALS 4
1.4 DELIVERY, STORAGE, AND HANDLING 9
1.5 WARRANTY 10
Part 2 Products 10
2.1 LH PUMP SKID SYSTEM 10
2.2 GENERAL DESIGN CRITERIA 14
2.3 PIPING 15
2.4 TUBING 15
2.5 ELECTRICAL SIGNAL AND POWER JUNCTION BOX 15
2.6 SKIDS 15
2.7 ELECTRICAL COMPONENT PHASE 15
2.8 GENERAL 16
Part 3 Execution 16
3.1 QUALITY CONTROL AND QUALITY ASSURANCE 16
3.2 PIPING/PUMP EXAMINATIONS 19

SECTION II SUBMITTAL PROCEDURES 24

Part 1 General 24
1.1 SUMMARY 24
1.2 SUBMITTALS 24
1.3 PREPARATION 25
1.4 SUBMISSION REQUIREMENTS 26
1.5 GOVERNMENT TECHNOLOGY REVIEW 27
1.6 PROGRESS SCHEDULE 28

APPENDIX
A SSC STANDARDS & SPECIFICATIONS
B P&ID
C CONCEPTUAL INTERFACE DRAWING AND ELEVATION VIEW DRAWING

SPECIFICATION FOR PROCUREMENT OF LIQUID HYDROGEN CRYOGENIC PUMP AND PUMP SKID 11CDK-GM09 NOVEMBER, 2013

SECTION 1 LH PUMP

Part 1 General

1.1 SCOPE OF WORK

Manufacturer shall furnish all labor, materials, equipment, and incidentals necessary to furnish and test, one liquid hydrogen pump skid with an option to supply a second pump skid at a later date.

1.2 REFERENCES

The publications listed below form a part of this specification to the extent referenced. The publications are referred to within the text by the basic designation only.

ASME INTERNATIONAL (ASME)

ASME BPVC SEC V	BPVC Section V-Nondestructive Examination (Latest Edition)
ASME BPVC SEC IX	BPVC Section IX-Welding and Brazing Qualifications (Latest Edition)
ASME B31-3	Process Piping (Latest Edition)

AMERICAN SOCIETY FOR NONDESTRUCTIVE TESTING (ASNT)

SNT-TC-1A	ASNT Standard for Qualification and Certification of Nondestructive Testing Personnel (ANSI/ASNT CP-105-2006) (Latest Edition)

ASTM INTERNATIONAL (ASTM)

ASTM E94	Radiographic Examination (Latest Edition)

NASA SSC

RPTSTD-8070-0001	Surface Cleanliness Standard of Fluid Systems for Rocket Engine Test Facilities of the NASA Rocket Propulsion Test Program (Latest Edition)
SSTD-8070-0126	Tubing Standard for Facility Systems, Special Test Equipment, and Aerospace Hardware (Latest Edition)

1.3 SUBMITTALS

All submittals, including cut-sheets, drawings and operation and maintenance data, shall have text written in the English language, and all numerical data shall be in the foot-pound-second system of units.

Materials for all parts shall be ASTM standards or other standards recognized in the United States of America; provided that, in the case of materials of construction not covered by such standards, the chemical composition and other key parameters shall be provided to allow the Contracting Officer (CO) to verify if the materials and/or items are equivalent. The chemical composition report of the alternate material must be submitted to the CO for review and approval prior to purchase. The manufacturer shall include copies of the non-ASTM standards translated into the English language. Submit, in accordance with Section III Submittal Procedures, the following:

SD-01 Preconstruction Submittals

PROGRAM MANAGEMENT REQUIREMENTS

A program plan, design drawings, testing procedures, cleaning procedures, Factory Test procedure, project coordination requirements and monthly reports are necessary to ensure that the equipment is supplied on schedule and as specified.

PROGRAM PLAN

Within 15 working days after the date of contract award, the Manufacturer shall submit to the Contracting Officer a manufacturing schedule for approval. This schedule will include construction and/or acquisition dates of the Liquid Hydrogen (LH) pump and pump skid, herein afterwards to be referred to as “pump skid.” Dates for component pressure testing, dates for assembly, dates for shop tests and date of delivery to site will be included on this schedule. This schedule will become the government authorized construction schedule after it is approved by the Contracting Officer.

PROJECT COORDINATION

The Manufacturer responsible for supplying the LH pump skid (this contract) will supply the Contracting Officer with the following information within six (6) weeks after Contract award:

a. Dimensioned (with elevations) layout of equipment, piping and all other items supplied by Manufacturer.

b. Recommended foundation designs with design parameters.

c. Dimensional drawing showing all interface points required to connect to the pump skid. This shall include piping connections, electrical connections, control interfaces, anchor points, and tubing connections.

REPORTING REQUIREMENTS

The Manufacturer shall prepare and deliver copies of a Monthly Progress Report to the Contracting Officer. Progress reports shall be submitted and shall include but not be limited to the following:

a. A summarized project status report.

b. Unanticipated technical or management problems and the proposed solutions. This shall also include the effect that any difficulties encountered and any proposed solutions will have upon the government authorized construction schedule.

SCHEDULES

The following is a summary of the documentation required for this project with quantities required and delivery duties. See Section II, Paragraph 1.2 for number and types of copies.

Document	**Date**
Design Drawings	6 weeks after contract award
Manufacturing Schedule	4 weeks after contract award
Redlined Drawings and Parts List	At completion of Contract
Cleaning Procedure	15 days in advance of date scheduled for cleaning
Factory Testing Procedure	15 days in advance of date scheduled for testing
Monthly Progress Report	The 10th of every month of the contract period
Delivered Certifications	Prior to delivery of the pump
Maintenance Manual	Prior to delivery of the pump
Operations Manual	Prior to delivery of the pump
Project Coordination	6 weeks after contract award

SD-02 Shop Drawings

Manufacturer shall provide the following:

General arrangement drawings of the pump skid design including materials of construction; P&ID; cross sectional assemblies field wiring diagrams, provisions for supporting appurtenances connected to the pump skid.

Catalog cut-sheets of all commercially available components.

Location of lifting lugs.

Approximate weight of and location of the approximate center of gravity of the completed pump skid.

Complete bill of materials.

Cut-sheets or paint specification for coatings to be applied by the pump skid manufacturer.

Foundation and anchor bolt plans and details.

Drawing with all changes incorporated prior to pump delivery.

SD-03 Product Data

Descriptive literature, bulletins, and/or catalogs of the equipment, including catalog cut-sheets for all third-party commercially available mechanical components integrated into the pump skid design.

Copy of the manufacturers' warranties for the pump, valves, and actuators, including all warranty provisions and exclusions.

List of recommended spare parts for the pump, valves and electrical components.

Radiographs and reader sheets shall be supplied for review and approval by NASA.

A list of installations, showing a minimum of five successful pump skid installations of the same type(s) and similar sizes specified for this installation within the past 3 years, including reference names and phone numbers.

SD-05 Design Data

Manufacturer's procedures used in skid fabrication including:

a. Welding procedure specifications (WPS) for all shop welding procedures used for both process piping and structural steel.

b. Procedure qualification records (PQRs) for each submitted WPS in accordance with ASME Section IX or AWS D1.1 (structural steel).

c. Welders' and welding operators' certifications for the qualified procedures in accordance with ASME BPVC SEC IX or AWS D1.1.

d. Post-weld cleaning procedures.

e. Personnel certification for individuals performing NDT/NDE. Certification shall comply with SNT-TC-1A.

f. NDE Procedures for each method used.

Design calculations shall be submitted and include, as a minimum, stress calculations for all major components of the pump skid such as surge chamber, cold ends, relief valve sizing, and vacuum jacket piping wall thicknesses.

Detailed design drawings for all fabricated auxiliary components.

SD-06 Test Reports

Mill test reports for chemical analysis and material properties only for pump's piping and tubing.

Shop testing procedures.

a. Vacuum jacket test report

b. Factory test report

c. Leak testing report

d. Acceptance Testing report at SSC

e. Copies of all final NDE testing, inspection, and examination results including but not limited to radiographs, reader sheets, MT/PT reports, pressure reports, cleaning, etc.

Nondestructive examination procedure(s) and results with weld map.

Dew point results of final pump skid assembly.

Certification that motor supplied has an efficiency of 94.0 percent or better.

SD-07 Certificates

Statement of Compliance with the governing standards and with this specification that the materials of constructions and type of pump skid are those normally used in the specified service and that the materials are resistant to the fluid and operating environment.

Statement of Compliance that the Manufacturer meets the requirements of the Purchase Order and Purchase Order specification."

SD-08 Manufacturer's Instructions

MAINTENANCE MANUAL

The manufacturer shall supply two copies and one pdf of a complete manual for the servicing and maintenance of all of the equipment supplied under the contract.

Information included in this manual shall include, but shall not be limited to:

a. A complete parts list

b. List of recommended replacement spares

c. Catalog cut sheets

d. P&ID

e. Maintenance procedures, including supplies required, common and special tools and equipment required and recommended frequency of maintenance.

f. Routine maintenance and procedure for replacing cold ends. Procedures for the overhaul and/or servicing of all the components supplied by the Manufacturer shall be included.

g. Fluid capacities

h. Critical torque values for critical parts

i. Lubricants required

j. Motor performance curve – Unit current draw vs. discharge pressure for the pumps.

k. Electric schematic

OPERATIONS MANUAL

The Manufacturer shall supply two copies and one pdf of an operating manual that details every aspect of the pump skid operation. This information shall include, but not be limited to:

a. Complete electrical, electronic, and process schematics shall be furnished if applicable.

b. Piping and instrumentation diagram (P&ID)

c. Utilities and industrial gasses required (quantity and quality)

d. Functional and physical data on each pump skid component

e. Skid description and anchor bolt locations

f. Equipment layout with all piping, valving, tubing, pipe and tubing supports, clamps, hangers and covers.

g. Description, sizes and locations of piping interfaces

h. Recommended system start-up sequence and parameters

i. Recommended system shut-down sequence and parameters

SD-10 Operation and Maintenance Data

Pump/valve numbers and identifications from the contract documents shall be used.

Shall contain the following minimum contents: installation instructions, including instructions for installation, operations and maintenance including preventive, corrective, and troubleshooting; schedules for maintenance; a list of tools required to service the equipment; operation instruction for normal startup and shutdown, emergency startup and shutdown, and ongoing normal operations.

1.4 DELIVERY, STORAGE, AND HANDLING

The pump skid and all appurtenances shall be crated, wrapped, and otherwise protected from damage during shipment. Care shall be taken in loading, transporting, and unloading to prevent injury to the pump, piping, valves, etc., appurtenances, and coatings.

1.5 WARRANTY

In addition to the Manufacturer's General Warranty and Guarantee, the manufacturer of the pump skid shall provide an 18 months warranty that shall include both parts and service.

In the event of failure of any part or parts of the equipment during the warranty period, provided that the equipment has been operated and maintained in accordance with good practice, the manufacturer shall furnish, deliver, and install the defective part or parts at the manufacturer's expense. The manufacturer shall warranty that service will be provided within 72 hours following the request for service. The CO shall be named as holder of the warranty.

Repairs completed by the manufacturer outside of original warranty will be warranted for not less than 90 days after each repair of a cold end or drive.

Pump and valves provided as part of this Section shall be guaranteed to operate for the design conditions described herein without defects in materials, workmanship, or operational failure for the warranty period.

The warranty period shall be interpreted as the 12-month period following the installation, adjusting, and acceptance testing, and the start of actual operation of the equipment, or 18-months following delivery of the equipment, whichever comes first.

Part 2 Products

2.1 LH PUMP SKID SYSTEM

2.1.1 **Overview**

The High Pressure LH Pumping System at Stennis Space Center (SSC) represents essential core infrastructure supporting NASA’s Engineering and Test Directorate’s (E&TD) mission to test rocket engines and other related hardware. The safety, reliability, maintainability and efficiency the equipment described below represent key factors in evaluating proposals for critical equipment.

2.1.2 Technical Requirements

The liquid hydrogen (LH) pump skid shall be a triplex arrangement (three vacuum jacketed cold end pumping chambers driven from a single crankshaft) belt driven by electric motor. ACD Pump Assembly, 3-SGV, LH2, 50mm Cold Ends, with vacuum jacket suction manifold. ACD brand name or NASA approved equal.

The pump shall be sized to provide at least 10 gpm LH (actual flow) at up to 4500 psig at not more than 250 rpm. NPSH available to the pump suction will range from 20 psig to 90 psig.

Pump drive shall be equipped with an internal oil pump. Splash lubrication is not acceptable.

Pump drive case shall be configured for a gaseous nitrogen purge. NASA will supply the purge gas.

A heater shall be provided for the oil sump of the drive.

A thermocouple for monitoring the oil temperature shall be provided.

Pumping chambers shall be vacuum jacketed SGV cold ends with 1.97 inch bore and 1.38 inch stroke.

Relief valves shall be provided to protect the pump and piping.

Temperature and pressure sensors shall be located in the suction and discharge piping main manifold for local and remote monitoring.

The system shall meet these requirements under the following conditions;

a. Outside ambient temperature of 0 degrees to 130 degrees F.

b. Relative humidity of 0 percent to 100 percent.

c. Ambient pressure of 1 atm.

The system shall meet these requirements with no protection from wind, rain or any of the components of normal sunlight.

Motor shall be a premium efficiency, inverter duty and severe service rated, 460 V/3 PH/60 Cycle, TEFC, with Class F insulation. Motor shall be suitable for Class 1, Division 1, Group B. Motor size shall not exceed 50 hp. The motor shall be a NEMA premium certified motor with an efficiency of 94 % or better.

Motor case and motor junction box shall each have provisions for purging with nitrogen gas.

A current transformer (CT) shall be provided and shall be located in the motor junction box that can be purged with nitrogen gas.

All sources of potential electrical spark shall be contained in a NEMA 4X weatherproof box that will be purged with nitrogen. All enclosures (including but not limited to the drive case, motor case, motor junction box, controls interface junction box) shall provide provisions for purging with nitrogen gas. All enclosures provided (except for the motor junction box and intermediate cavity) shall be stainless steel.

All electrical/instrumentation connections to the controls interface junction box shall be from the bottom only. The purge discharge connection to that box shall be from the bottom. All purged enclosure of any type shall be protected from over pressure. All purge vents shall be plumbed to a single discharge header. All purge cavities shall be equipped with a relief device. Purged enclosures shall have sensors to detect loss of purge gas pressure.

The pump skid arrangement shall be designed to minimize time and effort associated with the maintenance and repair of the pump assembly and related subcomponents. The pump skid will be installed on a 10 foot x 10 foot concrete foundation. The pump skid base shall fit within this area with no edges of the pump skid base extending over the edge of the concrete. The pump skid shall be designed such that the base can be anchored to the concrete foundation and the pump/motor can be slid back as required to facilitate the installation or removal of the pump suction flex hose without further disassembly of the pump drive and motor.

All process parts wetted with hydrogen shall be cleaned for hydrogen service per RPTSTD-8070-0001, Level VC. Only the dew point results will be required to be certified by the manufacturer via an examination report. Submittals shall include a cleaning procedure for approval by NASA.

All purge tubing and fittings for cavities not wetted with process fluid (LH/GH) are to be free of any visual forms of contaminates, oil, grease, metal shavings, etc.

All tubing provided on the pump skid shall be hydrostatic tested and tagged with a stainless steel tag. The tag on each tube segment shall legibly record the date of test, maximum allowable working pressure, and hydrostatic test pressure.

Pipe thread fitting are not allowed in hydrogen service at any pressure. MNPT/FNPT fittings for inert gas (purge and actuation applications only) may be used up to ½ inch. NPT fittings shall be per requirements of SSTD-8070-0126.

The high pressure discharge manifold connection for the skid shall be ¾ inch Medium Pressure Autoclave or Butech connection.

The skid manufacturer shall provide all regulators or other flow control devices as required for valve actuation and purges. This includes, but is not limited to regulators, solenoid valves, relief devices, pressure indicators, etc. All solenoid valves shall be located inside a purged stainless steel NEMA 4X box. NASA will provide 100 psig gaseous nitrogen for valve actuation and purging.

Solenoid valves for valve actuation or purges shall be 24VDC.

The pump skid's liquid hydrogen suction manifold shall connect to existing facility piping per the following:

Manifold inlet connection shall be a 1.5 inch cryogenic bayonet connection (ACME Cryogenics, drawing number B-03024 or NASA approved equal) with glass filled Teflon primary liquid seal, Grafoil gasket vapor seal, bolted bayonet flange (with rotating flange on the female side), and 150 psi design pressure rating, suitable for liquid hydrogen service. The skid manufacturer shall provide the bayonet connector assembly for the pump skid (both halves) although only halves of the connectors will become integral to the pump suction manifold. The companion halves will be shipped to NASA/SSC for attachment to existing facility piping. Elevation view with dimension is shown in a sketch in Appendix C.

The suction manifold and integral connecting piping shall be vacuum jacketed with dedicated evacuation and vacuum monitoring port.

The manufacturer shall ensure that the vacuum jacketed integral extension to the suction manifold is designed to accommodate thermal shrinkage between the stationary (when active) pump skid and the facility bayonet flange plus 1.0 inch. (The additional 1.0 inch accounts for thermal shrinkage of existing facility piping between the facility piping bayonet connection and the stationary vessel.)

NASA will provide all controls required for the operation of the skid and associated facility infrastructure. This requires that the manufacturer provide a comprehensive P&ID that defines all items on the skid that are monitored or operated. The manufacturer shall identify appropriate parameters and permissive interaction for each component or instrument associated with pump skid operation as well as the required sequence of operation so that they can be incorporated into the control system logic by NASA. Submittals shall include a complete description of all control devices so that the PLC can be configured to accommodate them.

All valves and instrumentation shown on the pump skid submittal P&ID shall be provided and installed by the manufacturer. NASA shall be notified of any field installed valves and instruments that may be shipped loose and installed in pipe or tubing connecting to the skids (i.e. high pressure discharge valve, unloading valve, continuous bleed valves, etc.) All off-mounted devices shall be connected to the controls junction box located on the pump skid. NASA will connect the PLC that provides for the control of both the skid as well as all other facility control elements to the junction box on each pump skid. All wiring penetrations on the controls junction boxes shall be on the bottom. An adequate number of bottom penetrations shall also be provided for connecting the wiring to the local PLC cabinet (provided by others). All penetrations to the pump skid junction boxes shall be water tight. Grommet seals for penetrations are acceptable. RTV or similar sealants are unacceptable.

Important note:

The SGV cold end design connects to the pump supply manifold using a flanged

bayonet connection inserted into its inlet. To remove any number of cold ends for repair it is necessary to separate the suction manifold from all cold ends and withdraw the male portion of all three bayonets from the inlet sides of all cold ends. The installation at SSC will require that the skid be retracted (moved away from the suction piping) to allow for cold end removal. Proposed arrangements that do not provide this capability will not be considered responsive.

Wiring (provided by others) connecting the Local PLC cabinet to the controls junction box on or adjacent to the pump skid will be contained in a cable tray (provided by others). All wire/cable runs connecting the PLC to the controls junction box will be of sufficient length (a minimum of 48 inch beyond the minimum required) to allow for the skid to be moved away from the suction manifold to allow cold end removal. It is preferred that the controls junction box be installed on and move with the skid, however, other design solutions will be considered.

The pump skid manufacturer shall document that they have an established repair and reconditioning capability for the pump drive and cold ends.

The pump skid manufacturer shall document that they routinely maintain critical spare parts in piece part or complete assembly form for cold ends and drives.

A factory acceptance test using liquid nitrogen is required prior to shipment of the skid to SSC. At least two week notice to the Contracting Officer of the test is required so that NASA can arrange for test surveillance.

All special tools required for the installation and repair of the pump skid shall be identified in the proposal submittals.

The manufacturer shall provide onsite support during initial startup at Stennis Space Center.

2.2 GENERAL DESIGN CRITERIA

a. All surfaces that are to come into contact with GH or LH will be compatible with GH and LH.

b. All valves, piping and tubing shall comply with the requirements of ASME B31.3.

c. Process valves shall be constructed of stainless steel. Cryogenic valves shall have extended bonnets.

d. Piping expansion and contraction due to thermal forces will be controlled by bellows joints or flexible hose on suction pipe.

e. All structures and components will be built to withstand 150 mph winds.

2.3 PIPING

a. Any piping/manifolds provided with the pump which are installed beyond the piping interfaces on the Manufacturer's off-the-shelf pump design shall be per B31.3, Normal service except for NDE examination requirements which are defined in Section 3.

b. High–pressure process valves shall be ASTM 300 series stainless steel with body rated for 6000 psig, with Teflon seals and gaskets rated by the manufacturer for the pressure service with no GH leakage. These valves shall have medium pressure Autoclave or Butech ports. SAE AS5202/AS4395 may also be used for valves and instrumentation.

c. High-pressure check valves shall be ASTM 300 series stainless steel rated for 6000 psig and cryogenic service.

d. Process relief valves shall be ASTM 300 series stainless steel AGCO, series 81JS full lift safety-relief valves with SAE AS5202/AS4395 threads and compatible with the service and pressure.

e. Surge chamber shall be rated for a MAWP of 6000 psig and hydrostatic tested to 9000 psig.

2.4 TUBING

Tubing shall conform to SSTD-8070-0126, stainless steel tubing systems, and dimensions for flared tubing ends. Compression fittings are not allowed. The pump discharge connection shall be fabricated with Autoclave or Butech medium pressure fittings and tubing.

2.5 ELECTRICAL SIGNAL AND POWER JUNCTION BOX

All electrical components shall be in accordance with the National Electrical Code (NEC).

2.6 SKIDS

Skids must be built out of structural shapes selected and calculated to withstand the equipment loading, wind load, stress induced in transporting and handling, rain, and all other static or dynamic forces encountered during its normal operations. The structural steel shall have a galvanized finish. Structural fasteners shall be stainless steel. Metric fasteners are not allowed.

2.7 ELECTRICAL

Electrical power at 24 V DC and 110/480 VAC, 60HZ is available at the site. Maximum amperage shall not exceed what is required for a 50hp motor and a NEMA 3 starter.

The components and wiring methods shall comply with all the applicable and current standards of the National Electrical Code and of the National Fire Protection Association (NFPA).

2.7.1 Motor

The pump motor shall be a NEMA Premium certified motor with an efficiency of 94 percent while running at normal capacity. The manufacturer shall submit a certification of the motor's efficiency.

2.8 GENERAL

2.8.1 Equipment

The Manufacturer shall furnish all labor, materials, tools, and equipment necessary for the design, fabrication, cleaning, testing, and delivery to NASA/SSC of the equipment described in herein.

2.8.2 Start-up and Factory Test

The Manufacturer shall be responsible for the procedures and work involved for start-up of the new equipment, leak testing, Factory Test, and the delivery to the Contracting Officer, as required by this document, of certifications, drawings, manuals and specifications involved in this procurement.

2.8.3 Government Furnished Items

a. The Government will furnish compressed air or nitrogen or helium and electricity as required for the on-site leak testing and acceptance testing at SSC.

b. The Government will furnish an installation site built to the specifications of the Manufacturer with foundations, control hook-up interfaces, power hook-ups, grounding connections, and piping connections interface.

2.8.4 End Products

End products are the responsibility of the Manufacturer, and are items required by the Government for the successful completion of the project.

Part 3 Execution

3.1 QUALITY CONTROL AND QUALITY ASSURANCE

Quality control (QC) and quality assurance (QA) for the design, fabrication, and installation of the products specified herein shall be the responsibility of the

Manufacturer and Manufacturer, including all QC and QA procedures in the shop and field required to comply with this Section.

The CO shall be notified of any and all tests, NDE inspections, and examinations. This notification shall be provided at least 15 calendar days prior to the scheduled start of the respective NDE and all testing.

The supplier shall provide on site support for start up and final acceptance testing at SSC. The Government shall furnish all the gaseous helium, liquid and gaseous nitrogen, liquid hydrogen and electrical power for all onsite tests.

QA verification inspections will be conducted during the manufacturing phase of the work. One will be of the nondestructive examination may be at the manufacturer's shop; and a second will be testing of the completed pump skid at the manufacturer's shop after assembly. The CO, and/or their designated representatives shall be allowed necessary access (within constraints of OSHA regulations) to all points of design and analysis, manufacturing, testing, inspection, cleaning, packaging, and shipping of products. The CO reserves the right to have a government representative make unannounced visits to Manufacturer facilities and the same necessary access shall also be allowed during these visits.

The Manufacturer shall cooperate fully to enable the CO and/or Government designated representative to be present at the performance of any or all tests and any other activity as specifically requested. The Manufacturer shall furnish all equipment and materials for all factory tests.

QA verification inspections by government representatives will be performed in accordance with the approved quality plan. In the event that equipment furnished as part of this Section is provided in multiple deliveries to facilitate the construction schedule, then QA verification inspections will be completed on the equipment provided in each delivery. The CO may retain the services of an industry specialist to perform QA verification inspections.

As a minimum, the quality plan shall include the following hold points:

Item	Surveillance	Type
1	The Government review and approval of welding procedures, NDE procedures, qualification records, and welder certifications, prior to commencement of any welding.	Verification
2	NDE results and records for welds, including repair of the same and RT (radiograph) film review prior to pressure and leakage tests.*	Verification
3	Cleaning and dew point inspections.	Verification
4	Pressure and leakage tests of the pump system. #	Witness
5	Functionally test the pump system at Manufacturer's facility. #	Witness

* Final Buy-offs of x-rays to be performed by SSC NDE Specialist Level III.
# The Government's NDE Level III QA Inspector shall have the final say on acceptance or rejection of any tests or examinations.

All equipment shall be designed, fabricated, and installed in accordance with the requirements of this section.

All equipment furnished under this section shall be new and unused products of manufacturers having a successful record of manufacturing and servicing the equipment and systems specified herein for a minimum of 10 years.

Should alternative equipment or products of alternative manufacturers not named in this specification section be offered by the Manufacturer as a recommended equal to that specified, such equipment shall be acceptable only on the following basis:

a. any revisions in the design and/or construction of the structure, appurtenant equipment, etc. required to accommodate such a substitution do not result in additional costs to the Government,

b. no degradation in system and component reliability and performance by substitution of the specified product/equipment-item with a recommended alternate or equal product/equipment-item,

c. the recommended alternate or equal equipment items or manufacturer products shall be fully disclosed to the Government during the competitive bidding process (prior to contract award) and are subject to approval by the CO. The CO reserves the right to reject any recommended alternate or equal equipment item or manufacturer’s product requested after contract award.

The Manufacturer shall submit to the CO, one pdf copy of all mill test reports for chemical analysis, mechanical properties including tensile, impact and bend test results for all materials used in the construction of all pumping system component parts (pressure containing external to pump itself). The mill test reports shall identify the components for which the material will be used and information necessary to verify compliance with this Section.

If there are difficulties in operation of the equipment due to the manufacturer's fabrication, additional service to correct the deficiencies shall be provided at no change in Contract Price or Contract Completion Date to correct the problems and meet the acceptance testing requirements specified below.

Inspection by the CO's representative or failure to inspect shall not relieve the Manufacturer of responsibility to provide materials and perform the work in accordance with the contract documents.

The Contracting Officer’s NDE Level III QA Inspector shall have the final say on accepting or rejecting any testing, examination or inspection results including but not limited to castings and welding.

3.2 PIPING/PUMP EXAMINATIONS

3.2.1 General

Piping shall be examined per the following requirements. For purposes of this specification piping is defined as any pipe, manifold, valves, etc. which is attached to the Manufacturer's basic pump design and is located upstream from the suction nozzle interface and downstream from the discharge nozzle interface as shown in the conceptual sketch in APPENDIX C.

The Manufacturer's basic pump design is considered off the shelf equipment and is not subjected to the following examination/testing except in Paragraph 3.2.4, 3.2.5, 3.2.6, and 3.2.7 of this section.

3.2.2 Visual, Dye Penetrant and Radiography Inspection

Where feasible all welds (inner and outer pipes) are to be visually inspected per ASME BPVC SEC V. The inner pipe welds shall be 100 percent radiographed examined where feasible otherwise the inner pipe shall be 100% dye penetrant inspected. The outer pipe welds shall be 100 percent dye penetrant inspected per ASME BPVC SEC V.

3.2.3 Vacuum Test

The annular space shall be subjected to a static vacuum test while the inner pipe is pressurized at 100 psig with nitrogen with a helium trace gas. A mixture of helium and nitrogen may be used but a maximum of 90% nitrogen. The vacuum shut-off valve shall be closed for a period of at least 24 hours after the inner space has been evacuated to 10 microns of mercury or less. After the Factory Test the total pressure increases in the annular space shall be determined and evaluated. The maximum increase shall not exceed 2 microns (12 micron reading).

3.2.4 Pump Shop Test at Pump Manufacturer

The pump assembly with all required piping attached shall be given a continuous 2-hour service test by the pump manufacturer prior to shipment from the manufacturer's plant. The units shall be tested over the entire operating range. Liquid nitrogen shall be used for the tests. Tests shall be performed in the presence of a Government Representative and shall demonstrate the pumps will deliver the flow rate and pressure specified. The certified test report shall be submitted to the Contracting Officer for approval.

3.2.5 Leak Test

After installation (by others) at SSC but prior to system start up, a successful leak test of the pump skid by others shall be performed as a prerequisite to acceptance testing at SSC .

The suction side test shall use gaseous nitrogen at 100 psig. There shall be no detectable leakage of pressure during the test.

3.2.6 Factory Test

The Manufacturer shall prepare and conduct an Acceptance Test at the factory to demonstrate that each pump skid meets the performance requirements of the applicable sections of the specifications and the following additional requirements:

a. Proper functioning of the pump skid and all components.

b. Proper operation of all valves.

c. No external leakage at liquid nitrogen temperatures or ambient temperature as applicable.

d. Proper operation of mechanical equipment.

e. Equipment and piping shall be free of excessive vibration.

f. The manufacturer shall include all the requirements necessary to ensure the safe and efficient operation of the system.

3.2.7 Activation Test At SSC

a. The acceptance test for the liquid hydrogen system, including the pump, interconnecting piping and the instrumentation shall be conducted for a minimum of two hours.

b. The tests shall conclusively demonstrate that the system operates in accordance with the requirements of the specifications and contract drawings.

3.2.7.1 Startup Assistance

The manufacturer shall provide a qualified technical representative as an advisor for two 8 hour days (exclusive of travel and preparation) for the pump skid start up and activation.

3.2.8 Non-Destructive Examination of Shop Welds

Welds for pressure-containing components shall be inspected by non-destructive examination (NDE) at the location of fabrication. Performance and coordination of all NDE activities, including third-party hiring and Quality Assurance verification inspections will be the responsibility of the Manufacturer.

NDE shall be performed by the Manufacturer to detect surface and internal discontinuities in completed welds. Employ the services of a third-party qualified commercial inspection company or testing laboratory having the following qualifications:

a. Individuals performing any NDE shall be qualified for NDT Level II for each NDE process conducted in accordance with the SNT-TC-1A.

The Manufacturer shall coordinate the manufacturing, NDE and CO's schedules. The NDE of shop welds shall comply with the Quality Control and Quality Assurance requirements of this Section. The Manufacturer shall provide unhindered access to the CO and their designated representative during QA examinations, including still photography and video documentation.

NDE methods employed may include:

a. Visual Examination (VT): 100 percent of pressure-containing component welds.

b. Radiographic Examination (RT) and Liquid Penetrant (PT): 100 percent radiographic examination, where feasible, of pressure-containing component butt welds of ferrous metals and nonferrous metals otherwise, 100 percent liquid penetrant inspection of the root and cover passes of pressure-containing component groove and fillet welds and all other welds that cannot be radiographic inspected.

c. Summary of interpretation of the NDE relative to the acceptance criteria set forth herein.

3.2.8.1 Visual Examination Acceptance Criteria (VT)

Free of external surface cracks and incomplete penetrations.

Welds having an undercut on the surface that is greater than 1/32 inch deep or 25 percent of the wall thickness being welded, whichever is less, shall not be acceptable.

3.2.8.2 Radiographic Examination (RT)

Procedures for RT shall be carried out in accordance with the ASME BPVC SEC V, Article 2.

Acceptance criteria for RT shall be in accordance with ASME B31.3, normal fluid service (NFS). Repair of welds not meeting the RT acceptance criteria shall be in accordance with paragraph UW-38. All repairs shall be reexamined by RT.

3.2.8.3 Liquid Penetrant Examination (PT)

Procedures for PT shall be carried out in accordance with the ASME BPVC SEC V, Article 6.
Acceptance criteria for PT shall be in accordance with ASME B31.3. All repairs shall be reexamined by PT.

3.2.9 Shipping And Delivery

Manufacturer is responsible for supplying the equipment to the site of installation at NASA/SSC. The Manufacturer shall package and protect so that the equipment is undamaged and meets cleanliness specifications upon delivery. In addition, the Manufacturer is responsible for the condition of the equipment until Final Acceptance (except for events beyond his/her control).

3.2.10 Installation

Installation will be by others, but a manufacturer representative shall inspect the installation to ensure proper installation and operation of the valves.

3.2.11 Field Testing

After proper installation and receipt of the Manufacturer's certification that the installation has been properly completed, the pumping system shall be tested simultaneously with the piping system they are installed on for the duration in the specific system testing. All leakage on the pump skid, with the exception of the interfaces between the pump skid and the SSC facilities piping, shall be corrected by the Manufacturer at the Manufacturer's expense.

3.2.12 Inspection

If the pump system proves to be defective, it shall be adjusted, repaired, or removed and replaced to the satisfaction of the CO.

3.2.13 Acceptance

The pump skid shall be accepted by the Government following:

a. Successful completion of factory testing.
b. Successful completion of acceptance testing at SSC.
c. Delivery of all deliverable documents.

-- End of Section --

**SPECIFICATION FOR PROCUREMENT OF
LIQUID HYDROGEN CRYOGENIC PUMP
AND PUMP SKID
11CDK-GM09**

SECTION II SUBMITTAL PROCEDURES

Part 1 General

1.1 SUMMARY

Requirements of this Section apply to, and are a component part of, each section of the specifications.

1.2 SUBMITTALS

A standard transmittal form provided by the Government, SSC Form 581, shall be used to transmit each submittal. One electronic copy created in PDF format will be submitted with SSC Form 581.

Submittal Description (SD): Drawings, diagrams, layouts, schematics, descriptive literature, illustrations, schedules, performance and test data, and similar materials to be furnished by the Manufacturer explaining in detail specific portions of the work required by the contract.

The following items, SD-01 through SD-11, are descriptions of data to be submitted for the project. The requirements to actually furnish the applicable items will be called out in each specification.

SD-01 Preconstruction Submittals

Submittals which are required prior to a notice to proceed on a new contract.

Submittals required prior to the start construction. Schedules or tabular list of data or tabular list including location, features, or other pertinent information regarding products, materials, equipment, or components to be used in the work.

SD-02 Shop Drawings

Submittals which graphically show relationship of various components of the work, schematic diagrams of systems, detail of fabrications, layout of particular elements, connections, and other relational aspects of the work.

SD-03 Product Data

Data composed of catalog cuts, brochures, circulars, specifications and product data, and printed information in sufficient detail and scope to verify compliance with requirements of the contract documents.

SD-05 Design Data

Design calculations or other data, written in nature, and pertaining to a part of the work.

SD-06 Test Reports

Written reports of a manufacturer's findings of his product during field inspections, attesting that the products are installed in accordance with the manufacturer's installation requirements, shop drawings, or other manufacturer's requirements. Manufacturer shall provide copies of all examination/tests reports from the manufacturer or the manufacturer’s subcontractors.

SD-07 Certificates

Statement of Compliance

SD-08 Manufacturer's Instructions

Preprinted material describing installation of a product, system, or material, including special notices and material safety data sheets, if any concerning impedances, hazards, and safety precautions.

SD-10 Operation and Maintenance Data

Data intended to be incorporated in an operations and maintenance manual.

1.3 PREPARATION

1.3.1 Marking

Permanent marking shall be provided on each submittal to identify it by contract number; transmittal date; Manufacturer’s, SubManufacturer's, and supplier's name, address(es) and telephone number(s); submittal name; specification or drawing reference; and similar information to distinguish it from other submittals. Submittal identification shall include space to receive the review action by the Contracting Officer.

1.3.2 Drawing Format

Drawings may be submitted in AutoCAD or pdf format. Otherwise, drawing submittals shall be prepared on bond (20 lb. bond minimum) paper, not less than 8-1/2 by 11 inches nor larger than 30 by 42 inches in size, except for full size patterns or templates. Drawings shall be prepared to accurate size, with scale indicated, unless other form is required. Drawing reproducible items shall be suitable for microfilming and reproduction and shall be of a quality to produce clear, distinct lines and letters. Drawings shall have dark lines on a white background.

Copies of each drawing shall have the following information clearly marked thereon:

a. Job name, which shall be the general title of the contract drawings.

b. Date of the drawings and revisions.

c. Name of Manufacturer.

d. Name of SubManufacturer, if applicable.

e. Name of the item, material, or equipment detailed thereon.

f. Number of the submittal (e.g., first submittal, etc.) in a uniform location adjacent to the title block.

g. The Government's contract number shall appear in the margin, immediately below the title block.

Manufacturer may use his own number system. Each drawing shall bear the number of the submittal in a uniform location adjacent to the title block.

1.4 SUBMISSION REQUIREMENTS

1.4.1 Schedules

Within 21 days of notice to proceed, the Manufacturer shall provide, for approval, the following schedule of submittals:

a. A schedule of shop drawings and technical submittals required by the specifications and drawings.

b. A separate schedule of other submittals required under the contract but not listed in the specifications or drawings.

c. Copies of both schedules shall be re-submitted monthly annotated by the Manufacturer with actual submission and approval dates. When all items on a schedule have been fully approved, no further re-submittal of the schedule is required.

1.4.2 Drawings Submittals

A pdf or Autocad of each drawing shall be submitted. One print, marked with review notations, will be returned to the Manufacturer.

1.4.3 Data Submittals

Indexed and bound product data shall be submitted. One set, marked with review notations, will be returned to the Manufacturer.

1.5 GOVERNMENT TECHNOLOGY REVIEW

1.5.1 Review Notations

CO will review submittals and provide pertinent notation within 14 calendar days after date of submission. Submittals will be returned to the Manufacturer with the following notations:

a. Submittals marked "Approved as Submitted." authorize the Manufacturer to proceed with the work covered.

b. Submittals marked "Approved, Except as Noted, Resubmission Not Required." authorize the Manufacturer to proceed with the work covered provided he takes no exception to the corrections. Notes shall be incorporated prior to submission of the final submittal.

c. Submittals marked "Approved, Except as Noted, Resubmission Required." require the Manufacturer to make the necessary corrections and revisions and to re-submit them for approval in the same routine as before, prior to proceeding with any of the work depicted by the submittal.

d. Submittals marked "Will Be Returned By Separate Correspondence" require the Manufacturer to follow the instructions given in the separate correspondence. If re-submission is required, the Manufacturer shall re-submit them for approval in the same routine as before prior to proceeding with any of the work depicted by the submittal.

e. Submittals marked "Disapproved" indicate noncompliance with the contract requirements and shall be re-submitted with appropriate changes. No item of work requiring a submittal shall be accomplished until the submittals are approved or approved as noted.

f. Submittals marked "Receipt Acknowledged" confirm receipt only.

g. Submittals marked "Other (Specify)" require the Manufacturer to follow the instructions given in the separate correspondence. If re-submission is required, the Manufacturer shall re-submit them for approval in the same routine as before, prior to proceeding with any of the work depicted by the submittal.

Manufacturer shall make corrections required and re-submit per this Section III. Approval of the submittals shall not be construed as a complete check, but will indicate only that the general method of construction and detailing is satisfactory. Manufacturer shall be responsible for the dimensions and design of connection details and construction of work. Failure to point out deviations may result in the Government requiring rejection and removal of such work at the Manufacturer's expense.

1.6 PROGRESS SCHEDULE

A monthly progress report is required.

-- End of Section --

APPENDIX A

SSC STANDARDS & SPECIFICATIONS

RPTSTD-8070-0001
SSTD-8070-0126

RPT TECHNICAL STANDARD **National Aeronautics and Space Administration** **Washington, DC 20546-0001**	**RPT Document No.-** RPTSTD-8070-0001 **Approved: 10.25.2010** **Expiration Date: 10.25.2015**

SURFACE CLEANLINESS STANDARD OF FLUID SYSTEMS FOR ROCKET ENGINE TEST FACILITIES OF THE NASA ROCKET PROPULSION TEST PROGRAM

MEASUREMENT SYSTEM IDENTIFICATION:
METRIC (INCH-POUND)

THIS STANDARD HAS NOT BEEN REVIEWED FOR EXPORT CONTROL RESTRICTIONS; CONSULT YOUR CENTER/FACILITY/HEADQUARTERS EXPORT CONTROL PROCEDURES/AUTHORITY PRIOR TO DISTRIBUTION OF THIS DOCUMENT.

RELEASED - Printed documents may be obsolete; validate prior to use.

DOCUMENT HISTORY LOG

Status	Document Revision	Approval Date	Description
Basic	Basic	10.25.2010	Initial Release, via RPT Program Office
Rev 1	Rev 1	07.02.2012	Minor administrative changes (agreed to in earlier edits) to sections 8.3.2 (remove paragraph c), 14.1 and 14.2 (remove "critical surface areas greater than 0.5m2"), Table 1A (Now reads Level "A" NVR for all oxidizer tanks ≤0.5m^2. Level "B" for N_2O_4 tanks >0.5m^2. Level "E" for O_2 tanks >0.5m^2) and Table 2, add 100A to Hydralic. Added Appendix G, Crossover Chart for **SSC use only**.
Rev 1-1	Rev 1-1	4.30.2013	Administrative change to SSC Crossover Chart: removed "oxidizer" and "oxygen" from *Note at bottom of chart.
Rev 2	Rev 2	5.15.2013	Administrative change to SSC Cross Over chart to clarify NVR requirements. Deleted Note "* Use Level "**A**" for all Oxidizer lines, parts, components (NVR maximum = 1.0 mg/ 0.1 m$^{2)}$. Use Level "**E**" for Oxygen tanks > 0.5m^2 surface area (NVR maximum = 5.0mg/0.1 m$^{2)}$." Added "Note 2: Use Level "**E**" (NVR maximum = 5.0mg/0.1 m^2) for tanks > 0.5m^2 surface area."

NOTES:

This document is hosted within the document system of TechDoc, and, is applicable to the RPT Program rocket test sites at NASA SSC, MSFC, JSC-WSTF, and GRC-PBS respectively.

Document may also be copied/archived at multiple sites for ease of accessibility and visibility at all four sites, and notably for the benefit of their respective onsite contractors and customers.

(This document is not controlled by the NASA Agency Level standards program at this time, though may be considered for this in the future should the need arise).

RELEASED - Printed documents may be obsolete; validate prior to use.

CORE TEAM MEMBERS

Signed original on file

Stennis Space Center, Gas & Materials Science, A2R Corp. Date
H. R. Ross, Lead

Signed original on file

Marshall Space Flight Center, Component Cleaning, Infopro Corp. Date
R. J. Joye

Signed original on file

NASA White Sands Test Facility Date
C. D. Madrid

Signed original on file

NASA Stennis Space Center, Center Operations Directorate Date
B. R. Farner

Signed original on file

NASA Glenn Research Center, Plum Brook Station Date
D. E. Taylor

Signed original on file

NASA Marshall Space Flight Center, Test Laboratory Date
M. J. Mims

RELEASED - Printed documents may be obsolete; validate prior to use.

DOCUMENT ACCEPTANCE AUTHORITY

(Rocket Propulsion Test Sites Only)

Signed original on file

NASA Stennis Space Center, Engineering & Test
T. R. Galloway, Director

Date

Signed original on file

NASA Marshall Space Flight Center, Test Laboratory
R. K. Burt, Director

Date

Signed original on file

NASA JSC/White Sands Test Facility
R. M. Cort, Associate Director for Technical

Date

Signed original on file

NASA GRC/Plum Brook Management Office
D. L. Stringer, Director

Date

Signed original on file

NASA Rocket Propulsion Test Program
Roger Simpson, Program Manager

Date

RELEASED - Printed documents may be obsolete; validate prior to use.

ACKNOWLEDGEMENT

This document has been reviewed by several subject matter experts, including Dr. William St. Cyr, Bartt Hebert, Larry deQuay, Bruce Farner, and Clifton Arnold, NASA/SSC; Bobby Hubbard and Gary Kennedy, NASA/MSFC; Douglas Dike, Contractor/SSC; and H. Richard Ross, Richard Joye, Shamim Rahman, Clifford Madrid, and Jim Worden, as well as members of the Rocket Propulsion Test Management Board. Their effort is gratefully acknowledged.

RELEASED - Printed documents may be obsolete; validate prior to use.

TABLE OF CONTENTS

SECTION **PAGE**

1. SCOPE 10
   1.1. Purpose 10
   1.2 Applicability 10
   1.3 Responsibilities 10
   1.3.1 General 10
   1.3.2 Quality Assurance 11
   1.3.3 Safety and Environmental 11
   1.3.4 Training 11
2. APPLICABLE DOCUMENTS 12
   2.1 General 12
   2.2 Government Documents 12
   2.3 Non-Government Documents 13
   2.4 Order of Precedence 14
3. ACRONYMS AND DEFINITIONS 15
   3.1 Acronyms and Abbreviations 15
   3.2 Definitions 16
4. SURFACE CLEANLINESS LEVELS 21
   4.1 Classification 21
   4.2 Non-Precision Cleanliness Levels 21
   4.3 Precision Cleanliness Levels 21
   4.4 Specifying Product Cleanliness Level 24
   4.5 Facility and Fluid System Cleanliness Level Requirements 24
5. SYSTEM CONFIGURATION AND DESIGN 26
   5.1 System Interfaces with Different Cleanliness Levels 26
   5.2 Component Removal 27
   5.3 Bottles and Vessels 27
   5.4 Piping 27
   5.5 Materials 27
6. CLEANING 28
   6.1 General 28
   6.2 Decontamination 28
   6.3 Cleaning Process Requirements 28
   6.4 Hardware Processing 29
   6.4.1 Assembled Items 29
   6.4.2 Disassembly Before Cleaning 29
   6.4.3 Critical Surfaces 30
   6.4.4 Pressure Testing 30
   6.4.5 Temporary Hardware 30
   6.4.6 Nonmetallic Items 30
   6.5 Controlled Area 31
   6.6 Rough Cleaning 31
   6.6.1 Exceptions 31
   6.6.2 Mechanical Cleaning 31
   6.6.3 Chemical Cleaning 32

RELEASED - Printed documents may be obsolete; validate prior to use.

6.6.4 Acid Cleaners 33
6.6.5 Alkaline Cleaners 34
6.6.6 Degreasers (Organic and Aqueous-Based Solvents) 34
6.6.7 Caustic Cleaners 34
6.7 Precision Cleaning 34
6.8 Field Cleaning 34
6.8.1 Preparation Before Field Cleaning 35
6.8.2 Decontamination 35
6.8.3 System Considerations 35
6.8.4 Installation of Temporary Hardware 35
6.8.5 Pressure Tests 35
6.8.6 Cleaning/Verification 35
6.8.7 Field Certification 36
6.8.8 Controlled Area Exceptions 36
6.8.9 Post-Verification Operations 37
6.8.10 Post-Verification Inspection 37
6.8.11 Protection of Cleaned Systems/Items 37
6.9 Excepted Components/Items 37
6.10 Equivalent Cleaned Items 38
7. CLEANING FLUIDS, VERIFICATION FLUIDS, AND RINSING AGENTS 39
7.1 General 39
7.2 Compatibility 39
7.3 Halogenated Solvents 39
7.3.1 Trichlorotrifluoroethane (CFC-113) 39
7.3.2 HCFC-225g (AK-225g) 40
7.3.3 HCFC-225 ca/cb (AK-225) 40
7.3.4 1,1,1 Trichloroethane (Methyl Chloroform) 40
7.3.5 Tetrachloroethylene (Perchloroethylene) 40
7.3.6 Trichloroethylene 41
7.3.7 Methoxynonafluorobutane (Hydrofluoroether-7100, HFE-7100®) 41
7.3.8 Decafluoropentane 62% & Trans-1,2-Dichloroethylene 38% (Vertrel MCA®) 41
7.3.9 Decafluoropentane (HFC-4310 mee or Vertrel XF®) 41
7.3.10 normal-Propyl Bromide (Ensolv®) 42
7.4 Alcohol Solvents 42
7.4.1 Isopropyl Alcohol 42
7.4.2 Ethyl Alcohol 42
7.5 DI Water 43
7.5.1 DI Water Verification Reagent (Used for Cleanliness Verification) 43
7.5.2 DI Water Rinsing Agent 43
7.5.3 Hydraulic Fluids for Cleanliness Verification 43
8. FLUID CONTROL REQUIREMENTS 44
8.1 Solvent Control Samples 44
8.2 Solvent Verification (Test) Samples 44
8.3 Solvent Volume Required For Cleanliness Verification 44
8.3.1 Items with Surface Area Less Than 0.1m^2 44
8.3.2 Items with Surface Area Between 0.1 and 0.5 m^2 45

RELEASED - Printed documents may be obsolete; validate prior to use.

8.3.3 Components/Items With Surface Area Greater Than 0.5m^2 45
9. VISUAL CLEANING CERTIFICATION 46
9.1 Visual Cleanliness 46
9.2 Flash Rust 46
9.3 Inspection Aids 46
9.4 UV Cleanliness Level 47
10. QUANTITATIVE CLEANLINESS CERTIFICATION 48
10.1 Method I – Component/ /Item Flush with Non-Halogenated Solvents or DI Verification Reagent 48
10.2 Method II – Component or Item Flush with Halogenated Solvent 49
10.3 Method III – NVR Using DI Water Verification Reagent 49
10.4 Method IV – NVR and Particle Determination for Fluid Transmission Lines 49
10.5 Method V – NVR and Particle Determination for In-Service Systems 49
10.6 Method VI – Solvent Flow Through Method 50
10.7 Method VII – Wipe Samples from Representative Critical Surface Area 50
10.8 Method VIII – Hydraulic Fluid Flush for Particulate Verification 50
11. ACIDITY AND ALKALINITY TEST 51
12. GAS REQUIREMENTS 52
13. SOLVENT REMOVAL VERIFICATION 53
14. DRYNESS VERIFICATION (MOISTURE REMOVAL) 54
15. PROTECTION AND PACKAGING OF CLEANED ITEMS 57
15.1 General 57
15.2 Packaging Films 58
15.3 Metallic Closures 59
15.4 Protective Devices 60
15.5 Dessicants 61
15.6 Inert Gas Purging 61
15.7 Sealing 62
15.8 Detailed Requirements 63
15.8.1 Small Items 63
15.8.2 Items Internally Cleaned Only 63
15.8.3 Items with Flange or Hub Nozzle Connections 64
15.8.4 Electrical and Electronic Items 64
15.8.5 Hose and Tube Assemblies 64
15.8.6 Identification of Cleaned Items 65
15.8.7 Packaging Removal 65
16. RECORDS AND FORMS 67
Appendix A SOLVENT REQUIREMENTS 68
Appendix B TEST METHODS 71
Appendix C CLEANLINESS VERIFICATION USING THE TEST SPOOL METHOD 80
Appendix D METHOD V, NVR AND PARTICLE DETERMINATION FOR IN SERVICE SYSTEMS 82
Appendix E METHOD VII, WIPE SAMPLES FROM REPRESENTATIVE CRITICAL SURFACES 85
Appendix F THERMAL VACUUM DRYING TIME (HOURS) 87
Appendix G CROSSOVER CHART, *FOR SSC USE ONLY* 88

RELEASED - Printed documents may be obsolete; validate prior to use.

LIST OF FIGURES

FIGURE **PAGE**

Figure D–1. Gas Sampler for NVR Residue.....83

LIST OF TABLES

TABLE **PAGE**

Table 1. Fluid surface cleanliness levels.....22
Table 2. Surface cleanliness requirements.....25
Table 3. Quantitative cleanliness verification methods.....48
Table 4. Packaging materials thickness and service requirements.....59

Table A–1. Trichlorotrifluoroethane.....68
Table A–2. HCFC-225G.....68
Table A–3. HCFC-225.....69
Table A–4. HFE-7100.....69
Table A–5. Vertrel MCA.....70
Table A–6. Vertrel XF.....70
Table D–1. Sampling Time.....83

RELEASED - Printed documents may be obsolete; validate prior to use.

Surface Cleanliness Standard of Fluid Systems for Rocket Engine Test Facilities

1. SCOPE

1.1. Purpose

The purpose of this standard (STD) is to specify the cleanliness levels and the minimum contamination control requirements (processing, handling, protection, and test/inspection) for surfaces that come in contact with any fluid medium. These requirements pertain to the "critical surfaces" of parts, items, components, equipment, assemblies, subsystems, and systems used for NASA's rocket propulsion test program.

1.2 Applicability

a. This standard is applicable to ground-based rocket propulsion test facilities for propellant, pressurant, pneumatic, and hydraulic systems that require cleanliness certification. Specifically, these are the test stands and facilities under the purview of the NASA Rocket Propulsion Test (RPT) Program.

b. All system and product cleanliness levels shall meet or exceed program or test article requirements. Program- or customer-specified requirements may impose additional cleanliness or process requirements. In such situations, process changes and supplemental procedures may be required to satisfy any additional program- or customer-specified requests.

c. This standard may be cited in contract, program, and other Agency documents as a technical requirement.

d. Mandatory requirements are indicated by the word "shall."

e. Tailoring of this standard for application to a specific program or project shall be approved by the Technical Authority for that program or project.

1.3 Responsibilities

1.3.1 General

a. NASA and contractor personnel responsible for engineering design, manufacture/fabrication, propulsion test operations, cleaning and inspection, calibration, and analysis activities shall implement this STD.

b. NASA and the Contractor shall ensure compliance with requirements of this STD through surveillance, auditing, and process verification.

RELEASED - Printed documents may be obsolete; validate prior to use.

c. Design specifications and drawings shall identify cleanliness levels by the alphanumeric or numeric designations defined in this STD.

d. The user is responsible for assuring suitability of the cleaned item for its intended use.

1.3.2 Quality Assurance

The performing organization's QA (quality assurance) shall review and verify that the surface cleanliness requirements for fluid systems are satisfied.

1.3.3 Safety and Environmental

a. All users of this standard must review pertinent Material Safety Data Sheet (MSDS) material specifications and work instructions to assure safety of personnel and protection of the environment and facilities in fulfilling the requirements of this STD.

b. All materials and processes required to fulfill the requirements of this STD are subject to applicable Federal, State, and local environment, health, and safety regulations, standards, codes, and operating procedures (e.g., work instructions). The performing organization is responsible for determining and establishing the appropriate environmental, health, and safety practices that are in compliance with all applicable regulations.

c. Questions regarding these activities, including air emissions, spills, solid and hazardous waste inventory, storage, removal, disposal, discharges, and waste minimization (e.g., recycling) shall be referred to the cognizant personnel within the performing organization.

1.3.4 Training

a. The performing organization or contractor shall assure that all personnel responsible for contamination control functions are trained as required to assure proficiency within their assigned tasks.

b. The processing organization or contractor shall establish personnel certification with traceable documentation.

RELEASED - Printed documents may be obsolete; validate prior to use.

2. APPLICABLE DOCUMENTS

2.1 General

a. The documents listed in this section contain provisions that constitute requirements of this standard as cited in the text of Section 4.

b. The latest issuances of cited documents shall be used unless otherwise approved by the assigned Technical Authority. The applicable documents are accessible via the NASA Technical Standards System at http://standards.nasa.gov, directly from the Standards Developing Organizations, or from other document distributors.

2.2 Government Documents

Federal Specification

A-A-1689	Tape, Pressure-Sensitive Adhesive (Plastic Film)
A-A-59150	Cleaning Compound, Solvent, Hydrofluoroether (HFE)
A-A-3174	Plastic Sheet, Polyolefin
A-A-59503	Nitrogen, Technical
TT-I-735	Isopropyl Alcohol

Military Specifications and Handbooks

MIL-C-81302	Cleaning, Compound, Solvent, Trichlorotrifluoroethane
MIL-T-81533	Trichloroethane 1,1,1, (Methyl Chloroform) Inhibited, Vapor Degreasing
MIL-STD-889	Dissimilar Metals
MIL-HDBK-1028/5A	Environmental Control – Design of Clean Rooms
MIL-PRF-27401	Propellant Pressurizing Agent, Nitrogen
MIL-PRF-27407	Propellant Pressurizing Agent, Helium
MIL-PRF-5606	Hydraulic Fluid, Petroleum Base; Aircraft, Missile, and Ordnance

National Aeronautics and Space Administration

JSC-SPEC-C-20	Water, High Purity, Specification for

RELEASED - Printed documents may be obsolete; validate prior to use.

MSFC 3535	Standard for Propellants and Pressurants used for Test and Test Support Activities at SSC and MSFC
KSC SPEC-P-0019	Solvent, Cleaning, 1,1,1,2,3,4,4,5,5,5 – Decafluoropentane (62 wt%) and Trans-1,2 – Dichloroethylene (38 wt%), Vertrel MCA, Specification for
KSC SPEC-P-0021	Solvent, Cleaning, 1,1,1,2,3,4,4,5,5,5 – Decafluoropentane, Specification for
KSC SPEC-P-0022	Solvent, Cleaning, 1,3-Dichloro-1,1,2,2,3, - Pentafluoropropane, Specification for
NASA SP-5076	Contamination Control Guidelines Handbook
NASA STD 6001	Flammability, Odor, Off-gassing and Compatibility Requirements and Test Procedures for Materials in Environments that Support Combustion

2.3 Non-Government Documents

American Chemical Society (ACS)
Reagent Chemicals: Specifications and Procedures

American Society for Testing and Materials (ASTM)

ASTM A 380	Standard Practice for Cleaning, Descaling, and Passivation of Stainless Steel Parts, Equipment, and Systems
ASTM D 1193	Standard Specification for Reagent Water
ASTM D 4080	Standard Specification for Trichloroethylene, Technical and Vapor Degreasing Grade
ASTM D 4376	Standard Specification for Vapor-Degreasing Grade Perchloroethylene
ASTM D 6368	Standard Specification for Vapor-Degreasing Grade and General Grade normal-Propyl Bromide
ASTM D 5486	Standard Specification for Pressure-Sensitive Tape for Packaging, Box Closure, and Sealing
ASTM F 312	Standard Test Methods for Microscopical Sizing and Counting Particles from Aerospace Fluids on Membrane Filters

RELEASED - Printed documents may be obsolete; validate prior to use.

ASTM F 331	Standard Test Method for Nonvolatile Residues of Solvent Extract from Aerospace Components (Using Flash Evaporator)
ASTM E 2042	Standard Practices for Cleanliness and Maintaining Controlled Areas and Clean Rooms

Compressed Gas Association (CGA)

CGA G-11.1	Commodity Specification for Argon

International Organization for Standardization

ISO 14644-1	Cleanrooms and Associated Environments – Part 1, Classification of Air Cleanliness
ISO 14644-2	Cleanrooms and Associated Controlled Environments – Part 2, Specifications for Testing and Monitoring To Prove Continued Compliance with ISO 14644-1

Society of Automotive Engineers (SAE) Aerospace Material Specifications (AMS)

SAE-AMS 3647	Polyfluoroethylene Propylene Film and Sheet
SAE-AMS 3649	Film, Polychlorotrifluoroethylene (PCTFE) Unplasticized

General Industry

IEST-STD-CC1246, Product Cleanliness Levels and Contamination Control Program

Society of Automotive Engineers (SAE) Aerospace Recommended Practices (ARP)

SAE-ARP 598	Aerospace Microscopic Sizing and Counting of Particulate Contamination for Fluid Power Systems

2.4 Order of Precedence

When this standard is applied as a requirement or imposed by contract on a program or project, the technical requirements of this standard take precedence, in the case of conflict, over the technical requirements cited in applicable documents or referenced guidance documents.

RELEASED - Printed documents may be obsolete; validate prior to use.

3. ACRONYMS AND DEFINITIONS

3.1 Acronyms and Abbreviations

AMS	Aerospace Materials Specification
AM&TE	Analytical Measurement and Test Equipment
ARP	Aerospace Recommended Practices
ASTM	American Society for Testing and Material
CGA	Compressed Gas Association
C_S	Control Sample (Solvent Blank NVR)
DI	Deionized
EXC	Excepted
FEP	Polyfluoroethylenepropylene
FTIR	Fourier Transform Infrared
GC	Generally Clean
GH	Gaseous Hydrogen
GOX	Gaseous Oxygen
HFE	Hydrofluoroether
IM&TE	Inspection, Measuring and Test Equipment
IR	Infrared
ISO	International Organization for Standardization
JSC	Johnson Space Center
KSC	Kennedy Space Center
LH	Liquid Hydrogen
LOX	Liquid Oxygen
MMH	Monomethyl hydrazine
mg	milligram
mL	millilters
M_S	Measured Sample NVR concentration
MSDS	Material Safety Data Sheet
MSFC	Marshall Space Flight Center
MIL	Military
NASA	National Aeronautics and Space Administration
NVR	Nonvolatile Residue
N2H4	Hydrazine
N2O4	Dinitrogen Tetroxide
PCTFE	Polychlorotrifluoroethylene
PFEP	Polyfluoroethylene-propylene
ppm	parts per million
PVC	Polyvinyl Chloride
QA	Quality Assurance
SA	Surface Area
SAE	Society of Automotive Engineers
scf	standard cubic feet
S_F	Sensitivity Factor

RELEASED - Printed documents may be obsolete; validate prior to use.

SPEC	Specification
SSC	Stennis Space Center
STD	Standard
TCA	Total Carbon Analyzer
TOC	Total Organic Carbon
UDMH	Unsymmetrical dimethyl hydrazine
UV	Visually Clean Plus Ultraviolet (ultraviolet cleanliness level)
VC	Visually Clean
WSTF	Johnson Space Center's White Sands Test Facility

3.2 Definitions

Analytical Measurement and Test Equipment (AM&TE): equipment used by a Science or analytical testing laboratory (e.g., IR spectrometer, gas chromatograph, scanning electron microscope, etc.). AM&TE analysis data is controlled by verification or standardization processes using chemical reference materials and/or standardized protocols (ASTM, ISO, EPA). IM&TE is instrument measurement and test equipment that is calibrated by a calibration laboratory (e.g., pressure gages, flow meters, balances, volt meters, etc.).

Assembly: two or more parts having a common mounting and being capable of performing a definite function. For example, filter element, housing, and O-ring become part of a filter assembly.

Black Light: a high intensity, long-wave, low-energy, ultraviolet (UV) light (UV spectrum 3200-3800 angstroms).

Blank: the analytical result that describes the particulate or NVR background level of the certified test fluid before use in performing a cleanliness verification test.

Blanket Purge: the use of pressurized gas in an enclosed environment for protecting components, piping, or vessels from contamination.

Certification: a written record demonstrating that requirements have been verified and achieved.

Cleaning: the removal of incompatible materials from the significant surfaces of components and systems within the scope of this standard.

Clean Room: a room in which precautions are employed to reduce contaminants in the air, producing a controlled environment for verification, assembly, and packing of cleaned items.

Commercial Clean: without gross contamination. Also known as visually cleaned (VC).

Component: an item that is normally a combination of parts, subassemblies, or assemblies and that is self-contained within a fluid system.

RELEASED - Printed documents may be obsolete; validate prior to use.

Contaminant: any material that could chemically react or mechanically interfere with a cleaned component, system, or end item.

Control Sample: a specific volume of flushing solvent that is analyzed to determine a baseline contamination level before a test or verification sample is attained. A control sample and a blank are considered to be equivalent.

Critical Surface: a surface that may come into contact with the fluid (service) medium (i.e., liquid oxygen, pneumatic gases, hydraulic fluids, etc.). A critical surface is subject to the cleaning procedures and cleanliness requirements of this specification.

Dewpoint: the temperature at which a gas becomes saturated with water vapor and condensation begins (usually atmospheric pressure).

Drying: reducing moisture or dewpoint levels by vacuum, purge, flush, or oven-heated methods.

Excepted Component/System/Soft Good: an item or system that cannot be cleaned and certified using normal procedures or facilities because of their size, construction, or method of assembly.

Fiber: a non-metallic structure having a length-to-width ratio of 10 to 1 or greater with a minimum length of 100 micrometers (A fiber is a particle).

Field Certification: the process of certifying components in the field.

Field Cleaning: cleaning performed outside a shop or clean room environment.

Field Verification: process of obtaining samples in the field for subsequent laboratory analysis to certify cleanliness levels.

Fluid: a gas or liquid.

Flushing Solvent: the solvent used to obtain the control sample and the test sample.

Generally Clean (GC): inspection is not as rigorous as visually clean (VC) in that clumps or agglomerations of contamination are removed instead of individual particles. Cleaning is only required if the item does not pass inspection. If the item has been inspected and accepted "as is," it does not need to be cleaned. Heat-sealed bagging protection is not required, but normal protection is required for handling, shipping, and storage. This cleanliness level should be specified for hardware that is not sensitive to contamination and is easily cleaned.

Gross Cleaning: the removal of gross contaminants, also known as rough cleaning.

Gross Contaminants: visible contaminants, such as moisture, corrosion, loose slag, oil, grease, scale, rust, soil, sludge, and grit.

RELEASED - Printed documents may be obsolete; validate prior to use.

Hydrocarbon: any compound containing carbon and hydrogen bonds.

Hypergolic Propellants: any fuel/catalyst (monopropellant) or fuel/oxidizer (bipropellant) combination that spontaneously ignites and is used in propelling a rocket.

Inaccessible: unable to be viewed because of physical configuration.

Inspection: the verification method performed by visual observation under ambient or black light.

Inspection, Measuring and Test Equipment (IM&TE): items used to perform measurements where distinct values are required for system performance or to demonstrate conformance to specified requirements.

Item: anything smaller than or contained within a system (e.g., assembly, component, IM&TE, piece part).

Method: a technique or process used to test, inspect, or collect samples.

Micron: dimension of length equal to 10^{-6} m or 0.001 mm (0.0000394 inch).

Moisture: the residual water (liquid/gas) on components or systems, measured in ppm or dewpoint.

Nonvolatile Residue (NVR): the residue remaining after filtration and controlled evaporation of the final flushing solvent. NVR is specified in mg per square meter or square foot of significant surface. Since the predominant constituents of NVR are hydrocarbons, NVR and total hydrocarbon content are considered equivalent; therefore, analytical methods that determine total hydrocarbon (e.g., gravimetrics, Fourier Transform Infrared (FTIR), and TOC) may be used to determine NVR.

Oxidizer: commodities, such as liquid oxygen and nitrogen tetroxide, which when combined with fuels (liquid hydrogen and hydrazine respectively), constitute the propellants for rocket engines. Air is also considered an oxidizer.

Oxygen System: a system containing a fluid with more than 25 mole percent oxygen. Air (20.94 mole percent oxygen) at pressures exceeding 2000 psig can react like pure oxygen at the same pressure. Air under these conditions will be treated like an oxidizer.

Packaging, Primary (or Primary Packaging Film): material (or film material) used to prevent contaminant entry onto precision cleaned items or precision cleaned (critical) surfaces. This material is either used to fabricate bags that totally enclose precision cleaned item(s) or stretched across and wrapped around openings or orifices of items with internal critical or precision cleaned surfaces, This material provides limited physical protection to surfaces covered

RELEASED - Printed documents may be obsolete; validate prior to use.

by this type of packaging, but this material is never to be the sole means/provider of this protection.

Packaging, Secondary (or Secondary Packaging Film): material (or film material) used to prevent visible contaminant entry onto the primary packaging (film). In selected cases where precision cleaned items are enclosed in bags in conjunction with protective external overwrap or containers or where covered openings of these items are small, this material provides physical protection to prevent damage to the primary packaging (film) and surfaces covered by this packaging. However, in most cases or for larger openings covered by packaging films, added protective devices are required to protect secondary packaging from damage or puncture.

Particle: a unit of matter with observable length, width, and thickness; usually measured in micrometers (microns). Particle size is measured in the longest dimension (e.g., fibril, fiber, filament, powder, soot, dirt, dust, mineral oxides, metallics, ceramics, any particulate matter).

Particulate: multiple particles.

Passivation: the process by which a chemically inert layer is formed on a metal surface by submersing the surface in a chemical solution (e.g., nitric acid, hydrogen peroxide, etc.).

pH: a unit of measure that describes the acidity or alkalinity of an aqueous solution on a scale of 0 to 14 (a pH of 7 is neutral, a pH value below 7 is acidic, a pH value above 7 is alkaline). pH is the logarithm of the reciprocal of the hydrogen ion concentration of a solution.

Pickling: The chemical or electrochemical process by which surface oxides are removed from metals.

Performing Organization: The onsite or offsite organization performing the cleaning or cleanliness verification services.

Precision Clean: a cleaning process used to achieve cleanliness levels more stringent than visually clean.

Procuring Organization: The organization authorized to issue the procurement of goods and services (e.g., cleaning or cleanliness verification services.)

Rough Cleaning: the cleaning process normally used to achieve cleanliness level VC.

Sample: a selected portion or quantity of fluid collected to determine the cleanliness level of a system or component.

Significant Surfaces: any surface of a component, item, assembly, subsystem, system, and ground support equipment that comes into contact with test fluids or service/medium fluid (liquid oxygen, pneumatic gases). A significant surface is subject to the cleaning procedures and cleanliness requirements of this Standard

RELEASED - Printed documents may be obsolete; validate prior to use.

Silting: an accumulation of particles below the size ranges counted and in such a quantity as to interfere with sample analysis (i.e., to cause a haze or to obscure any portion of a grid line or any portion of the grid of a filter membrane when viewed visually or under magnification.

Soft Good: polymer or polymer-containing materials that are used for integral parts of a fluid system. Ceramics are not included in the term "soft goods." Soft goods are often referred to as "nonmetals."

Test: the process used to determine the cleanliness level of a system, component, or packing material.

Test Sample: a specific volume of flushing solvent used for particulate and/or NVR analysis.

Visual Clean (VC): the absence of all particulate and non-particulate matter visible to the normal unaided (except corrected vision) eye.

Ultraviolet (UV) Clean: visually clean and inspected with the aid of an ultraviolet light of 3200 to 3800 angstroms. This level requires precision cleaning methods but no particle count.

Verification: the process whereby one or more of the following methods is used for the purpose of certification: performing visual inspections, obtaining samples, analyzing/testing samples, and reviewing inspection/test data.

RELEASED - Printed documents may be obsolete; validate prior to use.

4. SURFACE CLEANLINESS LEVELS

4.1 Classification

Cleanliness levels imposed by this standard are listed in Table 1.

4.2 Non-Precision Cleanliness Levels

a. Generally Clean (GC):

   1. Freedom from manufacturing residue, dirt, oil, grease, scale, carbon deposits, process debris, or other extraneous contamination. This level can be achieved by washing, brushing, or rinsing.
   2. The GC level shall not be designated for items or fluid systems that are sensitive to contamination.
   3. GC is the only cleanliness level that does not require items to be packaged. Gloves or forceps are not required for the handling of GC items.

b. Visibly Clean (VC): The absence of all particulate and non-particulate matter visible to the normal unaided (except corrected vision) eye. Particulate is identified as matter of size with observable length, width, and/or thickness. Non-particulate matter is a film or residue without definite dimension. Scale-free discoloration due to surface treatments (i.e., passivation, anodizing, etching, etc.) or thermal processes (i.e., welding, heat treatments, etc.) is permitted. Rough cleaning is the process normally used to achieve this cleanliness level. Level VC is commonly referred to as “commercially clean.”

4.3 Precision Cleanliness Levels

a. UV: Visibly clean (as defined above) and inspected with the aid of an ultraviolet light (black light) of 3200 to 3800 Angstroms. This level requires precision cleaning methods.

b. Any visible contamination or fluorescence shall be cause for re-cleaning.

c. If re-cleaning does not reduce fluorescence, an investigation shall be made to determine whether the fluorescing material is contamination or if the item material is naturally fluorescent.

d. Some acceptable materials may fluoresce (e.g., anodized or chemical films). Inspection under ultraviolet light will not detect all vegetable, animal, and fluorocarbon type oils and greases, (e.g., RP-1, JP-5, kerosene, mineral oil, toluene, DC-11®, Krytox® oil, or hydraulic fluid such as MIL-PRF-5606).

e. Level 1000 is the lowest precision cleaning level that requires a fluid sample for cleanliness certification (quantitative particulate count).

RELEASED - Printed documents may be obsolete; validate prior to use.

Table 1A. Fluid surface cleanliness levels.

(Table 1A) Particulate Matter Contamination Levels			(Table 1B) NVR Contamination Levels		(Table 1C) Visible Contamination Levels	
Level	Particle Size Range µ (micrometer)	**Maximum Number of Particles per 0.1 m^2**	Level	**Maximum NVR (mg. per 0.1 m^2)**	Level	Definition
25	<5 5 to 15 >15 to 25 >25	Unlimited * 19 4 0	A	1.0	GC	Freedom from manufacturing residue, dirt, oil, grease, etc.
50	<15 15 to 25 >25 to 50 >50	Unlimited * 17 8 0	B	2.0	VC	The absence of all particulate and non-particulate matter visible to the normal unaided eye or corrected-vision eye; commercially cleaned.
100	<25 25 to 50 >50 to 100 >100	Unlimited * 68 11 0	C	3.0	UV	Visually clean and inspected with ultraviolet light; requires precision cleaning methods
150	<50 50 to 100 >100 to 150 >150	Unlimited * 47 5 0	D	4.0	● NVR & Moisture Requirements Critical surfaces with NVR requirements will meet: Level "A" NVR for all oxidizer tanks ≤0.5m^2. Level "B" for N_2O_4 tanks >0.5m^2. Level "E" for O_2 tanks >0.5m^2 ● Dewpoint & Moisture Content -54° C (-65 °F) 24 ppm for lines, parts, and components -40 °C (-40 °F) 128 ppm for tanks and vessels Dewpoint & moisture is not required if the critical surface is normally opened to the atmosphere or if the critical surface is exposed to moisture during normal operations ● **NOTES** Allowable particulate and NVR are based on 0.1 m^2 (1.08 ft^2) * Silting is not permitted	
200	<50 50 to 100 >100 to 200 >200	Unlimited * 154 16 0	E	5.0		
250	<100 100 to 200 >200 to 250 >250	Unlimited * 39 3 0	F	7.0		
300	<100 100 to 250 >250 to 300 >300	Unlimited * 93 3 0	G	10.0		
400	<100 100 to 250 >250 to 400 >400	Unlimited * 155 5 0				
500	<100 100 to 250 >250 to 500 >500	Unlimited * 1073 27 0				
750	<250 250 to 500 >500 to 750 >750	Unlimited * 205 9 0				
1000	<500 500 to 750 >750 to 1000 >1000	Unlimited * 34 5 0				

RELEASED - Printed documents may be obsolete; validate prior to use.

Table 1B Visible Contamination Levels	
Level	**Definition**
GC	Freedom from manufacturing residue, dirt, oil, grease, etc. – Level GC is similar to level VC but differs in the following significant areas: • Cleaning is only required if the item does not pass inspection. If the item has been inspected and accepted "as is," it does not need to be cleaned. • Inspection is not as rigorous as VC in that clumps or agglomerations of contamination are removed instead of individual particles. • Heat-sealed bagging protection is not required, but normal protection is required for handling, shipping, and storage. • The GC level should be specified for hardware that is not sensitive to contamination and is easily and quickly cleaned or re-cleaned.
VC	The absence of all particulate and non-particulate matter visible to the normal unaided eye or corrected-vision eye; commercially cleaned.
UV	Visually clean and inspected with ultraviolet light; requires precision cleaning methods.

Notes for Tables 1A&1B

1. If specified in work documents or engineering drawings, a gas sample for dew point and moisture is not required if the critical surface is exposed to moisture during normal and routine operations, or opened to the atmosphere (e.g., dump or vent lines), or the critical surfaces will come in contact with moisture during normal operation.
2. For such cases, the component cleanliness level shall be indicated as xxx-NDP (No Dew Point) requirement shall be appended to the cleanliness level indication. However, the presence of visible moisture is not permitted for cleanliness level VC or for any precision cleanliness level.
3. Some propulsion systems, such as hypergolic systems, may require cleanliness levels more stringent than those defined in Tables 1A and 1B for system performance or safety. When more stringent cleanliness levels than those shown in Table 1 are required, they shall be specified on the engineering drawing or specification in accordance with IEST-STD-CC1246, or tailored from IEST-STD-CC1246, with cleaning, inspection, and packaging in accordance with this document.
4. The cleanliness levels specified in RPT site specific cleanliness standards (e.g. MSFC 164 or SSTD-8070-0089 –FLUIDS, etc.) will remain in effect for items cleaned prior to the approval date of the RPT Surface Cleanliness Standard of Fluid Systems.
5. Cleanliness levels listed in site specific cleanliness standards shall commence for items cleaned "on or after" the approval date of this standard.

RELEASED - Printed documents may be obsolete; validate prior to use.

4.4 Specifying Product Cleanliness Level

Product cleanliness levels shall be determined by program and system requirements, which shall be specified as in the following examples:

a. Level 300 refers to size and count limits on particulate contamination only.

b. Level A refers to Nonvolatile Residue (NVR) limits only (i.e., 1 mg/0.1 m^2).

c. Level 300A refers to (1) particulate size ranges and counts, and (2) NVR.

d. Level 200A is a more stringent cleaning level than 200B.

e. Level 800A NDP is the same cleanliness level as 800A except the dew point and moisture requirement is absent (not required).

f. A component cleaned to a more stringent cleanliness level than is required for a system application may be used in the system application (e.g., an item cleaned to level 100A) and may be used in a product or system requiring less stringent cleanliness level (e.g., level 200 or 200A or UV).

g. Level VC is a more stringent cleaning level than GC.

h. No particulate count is required for any visual cleanliness level (GC, VC, or UV).

4.5 Facility and Fluid System Cleanliness Level Requirements

a. Table 2 provides a practical range of cleanliness levels for facility fluid systems.

b. System and product cleanliness levels shall meet or exceed program or test article requirements.

c. The precision cleanliness levels in Table 1A require quantitative tests as specified in Section 10 and conformance to visual cleanliness requirements and inspection (Section 4.2 (b).

RELEASED - Printed documents may be obsolete; validate prior to use.

Table 2. Surface Cleanliness Requirements

Fluid	Facility Item Description	Cleanliness Level ① ③④
LOX/GOX	Metallic and/or PTFE and components	400A
LOX/GOX	Nonmetallic parts and components (except PTFE)	VC
LOX/GOX	Metallic Tanks or vessels	750E
LOX	Emergency dump/vent system(s)	UV NDP
LH/GH/ CH_4	Metallic and/or PTFE parts and components	400
LH / GH/ CH_4	Nonmetallic parts and components (except PTFE)	VC
LH /GH / CH_4	Tanks or vessels	400
LH /GH / CH_4	Vent and flare stacks	VC NDP
H_2O_2 / N_20_4	Metallic or virgin PTFE parts and components	400A ②
H_2O_2 / N_20_4	Nonmetallic parts and components (except PTFE④)	VC ②
H_2O_2 / N_20_4	Metallic Tanks or vessels	400C ②
Alcohols including IPA	All items	100
Hydrocarbon Fuels, less Methane (CH_4)	All items	400
MMH /UDMH	All items depending on connecting service	200 to 300
N_2H_4	All items depending on connecting service	200 to 300
He / HPA	Metallic or PTFE items depending on connected service	100A 400A or 750A or 1000A
He / HPA	Nonmetallic parts and components (except PTFE④) depending on connected service	VC
He	Vent or area purge	VC NDP
GN_2 / LN_2	Depending on connected service	100A 400A or 750A or 1000A
GN_2	LH barges	1000
Hydraulic	All items	100 or 100A

NOTES:

① Depending on the site specific requirements, more stringent cleanliness levels are acceptable. An absolute filter shall be used where particulate facility system cleanliness levels are less stringent than the test article requirements.

② Critical surfaces for H_20_2 or for any item requiring passivation shall be passivated after rough cleaning and before performing final cleanliness verification.

③ Multiple service parts shall be cleaned to the most restrictive requirements.

④ Used in small quantities for cleanliness verification only. Under no circumstances shall PTFE be left to soak in halogenated solvents for extended periods due to the risk of swelling.

For systems, subsystems and components where the cleanliness levels differ as shown in Table 2, Process and Instrumentation Diagram (P&ID) or engineering drawings or requirements shall indicate cleanliness levels

RELEASED - Printed documents may be obsolete; validate prior to use.

5. SYSTEM CONFIGURATION AND DESIGN

The consideration of contamination control during the design phase or during system modifications is of the utmost importance. To assure the most effective contamination control, the engineering design or modification shall provide for:

a. Features that minimize or eliminate self-generating contamination.

b. Materials compatibility for contamination and corrosion control.

c. Features to facilitate contamination removal and monitoring during maintenance (items that would entrap fluids - e.g., reduce or eliminate component configurations with dead end volumes or hardware with complex physical configuration). Proper design consideration will minimize un-drainable cavities, blind holes, pockets, and other areas in which dirt and cleaning solutions might become trapped and would not provide for effective circulation and removal.

d. Incorporation of filtration and/or other control features to reduce contamination during system operation.

e. Lubricants, sealing and staking compounds, nonmetallic materials, etc., shall be selected, tested, and controlled to ensure preservation of the required cleanliness levels.

f. Selection and evaluation of these materials shall include consideration of outgassing and degradation resulting from operational and environmental conditions expected during testing.

5.1 System Interfaces with Different Cleanliness Levels

When fluid systems are designed or modified, cleanliness breaks shall be established to enable connection of systems that have different cleanliness levels.

a. Use an absolute filter for any cleanliness level breaks that have different particulate levels and the same NVR level (e.g., 300A and 400A) or no NVR level (e.g., 300 and 400).

b. Use dual check valves for any cleanliness level breaks that have different NVR requirements (e.g., upstream, 300A; downstream, 300E). Add filter if downstream particulate requirements are more stringent than upstream requirements (e.g., upstream 400A; downstream 100E). An upstream system must have the same or higher NVR cleanliness level requirement than the downstream system (e.g., upstream, 200A; downstream, 200E or 300B).

RELEASED - Printed documents may be obsolete; validate prior to use.

5.2 Component Removal

a. Designs for systems and system components should enable the removal of all valves and components from the system.

b. In cases where it is not practical to use removable components (e.g., V-J valves with butt-weld end connections), component design shall enable removal of all internal piece parts of the component while it is connected to its respective system.

c. All removed components shall be replaced with temporary hardware closures and shall meet the requirements in Section 6.4.3.

5.3 Bottles and Vessels

a. Designs of bottles and vessels shall incorporate adequate provisions for cleaning.

b. These provisions shall include, but are not limited to, man-way or "jet-mole" access (to inspect and flush/spray all significant surfaces wetted by service media) and low-point drains (to collect flush samples).

5.4 Piping

In a complex piping system, determining the effectiveness of a cleaning operation may be difficult. One method of designing inspection into the system is to provide a short flanged length of pipe (e.g., spool piece) at a location where the cleaning is likely to be least effective. The spool piece can be removed for cleanliness verification upon completion (see verification method IV in Table 3, Spool Piece Test Method for Pipes and Fluid Transmission Lines).

5.5 Materials

Selection of materials used in processing and testing must be compatible with the fluid medium and with the system items.

RELEASED - Printed documents may be obsolete; validate prior to use.

6. CLEANING

6.1 General

a. Cleaning comprises two categories: rough and precision. Adequate contamination control is imperative to minimize hazards and component failures that can result from contamination.

b. Contaminants shall be removed from hardware surfaces in accordance with applicable engineering documents or NASA-approved procedures.

c. Cleanliness is a perishable condition. Careful planning is necessary to achieve and maintain clean surfaces. Such planning includes corrosion protection, surface treatments, material degradation, packaging, handling, processing, controlled environment, etc. If there is a concern regarding the effectiveness of the cleaning process or possible adverse effects, trial runs using test specimens may be desirable.

6.2 Decontamination

a. All systems, subsystems, components, and items that have been exposed to toxic propellants or hazardous materials (e.g., hypergols) shall be decontaminated to the required level of safe handling before initial cleaning operations.

b. Under no circumstances shall propellant-contaminated systems, subsystems, or components be cleaned or transported directly to a cleaning, calibration, or lab facility before decontamination.

c. Decontamination shall be accomplished using established and proven methods, either in place for the removal or neutralization of propellant residues, or hazardous materials or in an area specifically devoted to decontamination operations.

d. No items shall be accepted for cleaning or testing without “proof of decontamination.”

6.3 Cleaning Process Requirements

a. The performing organization is responsible for complying with the requirements of this STD. The cleaning and cleanliness verification (test) methods must not be detrimental to the materials and/or to the operational requirements of the item or system.

b. The performing organization shall prepare controlled (documented) procedures containing the following information:

   1. Description of the items to be cleaned, including identification of materials and process precautions to be observed

RELEASED - Printed documents may be obsolete; validate prior to use.

2. Cleaning methods used: Alkaline cleaning, acid cleaning, pickling, aqueous or semi aqueous cleaning (with or without ultrasonics or agitation, spray), vapor degreasing, mechanical cleaning (e.g., wire brushing) solvent washing, etc.

3. The orientation of hardware to allow cleaning agents to contact and drain from all critical surfaces.

4. Processing materials/chemicals to be used, including (as applicable) trade names, specifications, chemical and physical properties, and process parameters.

5. The cleaning fluids shall be controlled during use by analysis, solution replacement, or adjustment to maintain cleaning effectiveness and compatibility with the type of material being cleaned.

6. The performing organization shall maintain fluid control records.

7. The records shall indicate the scheduled analysis results and any solution replacement or adjustments.

8. Inspection and test methods

9. Drying and preservation methods

10. Controlled areas/product protection and packaging methods

6.4 Hardware Processing

6.4.1 Assembled Items

a. Assembled parts/items that may be damaged during the cleaning operation or that may entrap fluids (because of complexity) shall be cleaned before the joining operation or shall be disassembled to a level to permit cleaning.

b. Subsequent handling and assembly operations shall be conducted to maintain an acceptable level of cleanliness.

6.4.2 Disassembly Before Cleaning

a. Complete disassembly is required before cleaning or verifying all components except for certain excepted components being field cleaned or verified by a NASA-approved procedure. Therefore, use of components that cannot be completely disassembled should be avoided.

b. Items that cannot be dissembled shall be processed as “excepted components” as specified in Section 6.9

RELEASED - Printed documents may be obsolete; validate prior to use.

6.4.3 Critical Surfaces

Items that cannot be completely immersed in the cleaning solution (e.g., small diameter tubing) shall have the solution circulated through the item or shall be manually oriented so that full surface contact with the process chemicals and rinsing solvents or deionized (DI) water can be achieved.

6.4.4 Pressure Testing

Functional items, such as flexhoses, tube assemblies, vessels, and systems that require hydrostatic or pneumatic tests, shall be tested before the final or precision-cleaning operation using an appropriate test fluid at the specified test conditions (e.g., temperature, pressure, etc.).

6.4.5 Temporary Hardware

a. All temporary hardware necessary to perform functional tests or to validate the cleaning process shall be compatible with the processing materials, fluid media, and system items.

b. All temporary hardware necessary to perform functional tests or to validate the cleaning process shall withstand the specified environment.

c. All temporary hardware shall be legibly marked or otherwise identified as “temporary hardware” to ensure its removal from the item or system before final acceptance.

d. All surfaces near openings resulting from the removal of components or instrumentation shall be visibly clean of contamination before the installation of temporary hardware. This requirement also applies when removing temporary hardware and when installing components or instrumentation.

6.4.6 Nonmetallic Items

a. Nonmetallic materials (soft goods) include Teflon®, Viton®, Neoflon®, Kel-F®, PVC, nylon, Buna–nitrile, natural rubber, polyethylene, urethane, and other plastics or polymers. Take special care to ensure that the cleaning processes used will not adversely affect the materials (e.g., damage or absorb the cleaning solution and consequent outgassing).

b. Cleanliness processes for composite vessels used in cryogenic service require special cleaning procedures. Each user shall require sub-tier documents to address processing, cleanliness methods, and verification. An engineering assessment is necessary to establish cleanliness requirements for each composite vessel.

RELEASED - Printed documents may be obsolete; validate prior to use.

6.5 Controlled Area

a. Clean rooms and clean work stations required for precision cleaning (e.g., processing, assembly, functional testing, packaging, etc.) shall be in an environmentally controlled area compatible with the product cleanliness level per ISO 14644-1 and 14644-2.

b. The performing organization shall establish and implement the requirements for the periodic certification of clean rooms, clean work areas, and other environmentally controlled work enclosures.

c. Items that require field cleaning because of size, configuration, and installation features (e.g., large pipes, tanks, etc.) or other special considerations cannot be performed in a controlled area. If field cleaning approval is obtained from NASA engineering, processing and inspection shall be conducted in a manner that does not degrade the specified cleanliness level using approved procedures.

6.6 Rough Cleaning

a. Rough cleaning is used to achieve level VC clean articles. Rough cleaning removes contaminants (e.g., corrosion, dirt, grease, scale, gum, or other foreign matter) from critical surfaces of systems and from individual items/parts before precision cleaning. Rough cleaning may be accomplished by using one or more of the following processes or materials: mechanical cleaning, halogenated degreasers, alkaline or acid cleaners, and detergents and ambient or heated tap or DI water. Concealment of crack indications associated with rough cleaning processes should be carefully considered and evaluated.

b. Articles shall be cleaned to level VC before precision cleaning.

c. Rough cleaning is considered a normal shop process and usually does not require special environmental controls, packaging, handling, or storage beyond accepted good practice.

6.6.1 Exceptions

Unless specified otherwise by program, customer, or engineering work requirements, the following items are exempt from rough/mechanical cleaning if the visual cleanliness requirement is met: dry film lubricated surfaces, finished machined surfaces, and anodized or chemical filmed aluminum, plated passivated items that have been protected from contamination since finishing.

6.6.2 Mechanical Cleaning

a. Mechanical cleaning removes contamination by abrasive action and can be used only when contaminants generated can be removed by subsequent cleaning. Mechanical cleaning may be accomplished by wire brushing, hydro blasting, and (wet or dry) grinding. This method is used only when physical damage to the item being cleaned will not occur (wire brushing and grinding can affect dimensions, tolerances and

RELEASED - Printed documents may be obsolete; validate prior to use.

surface finishes [e.g., anodized or chemical films or plated surfaces] - particular care must be taken to avoid damage when de-scaling thin sections, polished surfaces, and close tolerance parts). Mechanical cleaning methods may imbed brush or grinding material particles in the cleaning surface. Cleaning brush selection depends on the component or system parent material. Nonmetallic brushes are suitable for most materials to be cleaned.

b. Carbon steel brushes shall not be used on aluminum, copper, and stainless steel alloys.

c. Stainless steel brushes previously used on other metals (e.g., carbon steel) shall not be used on stainless steel.

d. All loose dirt, scale, and other debris shall be completely removed from the item by vacuum cleaning, brushing, blowing, or flushing with (ambient or heated) tap or DI water.

e. Abrasive blast cleaning should be avoided. This method uses forceful impingement of abrasive particulates and may deposit (embed) contaminants that cannot be removed from the substrate. This method can increase the residual compressive stresses in the surfaces of metallic components.

6.6.3 Chemical Cleaning

a. Proprietary cleaners should be evaluated to determine whether they contain chemicals (e.g., chlorides, corrosive compounds, etc.) that could adversely affect the performance of any cleaned item or system under operational conditions (e.g., stainless steels are very susceptible to chloride ion attack). Acid and caustic compounds can corrode metallic parts and etch sealing surfaces if not neutralized upon completion of cleaning.

b. Storage or immersion tanks, pumps, and associated piping and hardware used for cleaning items or systems must be compatible with the cleaning processes (solutions, pressure, temperature, etc.) and with any acid or caustic solutions.

c. Parts must be thoroughly rinsed to prevent the cleaning solution and contaminants from re-depositing on the surface. Acid and caustic compounds can corrode metallic parts and etch sealing surfaces if not removed. Also, if the cleaning solution is not completely removed, any contaminants remaining in the cleaning solution can redeposit on the critical surface during the drying operation.

d. All surfaces shall **not** be allowed to dry with any chemical cleaning solution or tap water.

e. Internal and external surfaces that have been cleaned or that have come in contact with aqueous or semi-aqueous media or with chemical solutions shall be tested for

RELEASED - Printed documents may be obsolete; validate prior to use.

acidity and alkalinity by rinsing with DI water while the surfaces are wet from the final cleaning process as required in Section 11.

f. Most chlorinated solvents are incompatible with titanium alloys and shall not be used unless specified by program requirements or upon approval from the NASA procuring activity.

6.6.4 Acid Cleaners

Materials must be degreased before using any acid cleaners. Acid cleaners are used to remove contamination (e.g., weld scale, corrosion and oxide films) not removable by other solutions. Acid cleaners include nitric acid, chromic acid, inhibited hydrochloric acid, inhibited sulfuric acid, inhibited phosphoric acid, mixed acid deoxidizers, and alcoholic-phosphoric acid. Common applications include the following:

a. Phosphoric acid based cleaning agents remove oxides, light rust, light soils and fluxes

b. Hydrochloric acid based cleaning agents are recommended for carbon and low alloy steels. These agents remove rust, scale and oxide coating and strip chromium, zinc and cadmium platings. Hydrochloric acids shall not be used on stainless steel since it may cause stress corrosion or stress corrosion cracking

c. Nitric acid cleaning agents are normally used for aluminum, copper and their alloys. These agents are not true cleaning agents but are used for deoxidizing, brightening, and for removal of black smut which forms during cleaning with an alkaline solution. Nitric acid solutions are effective for removing free iron and other metallic contamination, but are not effective against scale and heavy corrosion deposits,

d. Nitric-hydrofluoric acid (pickling) solution is most widely used on stainless steel to remove both metallic contamination, and welding and heat-treating scales.

e. Continuous exposure to pickling solutions for more than 30 minutes is not permitted. Pickling Solution use should be carefully controlled and shall not be used for de-scaling sensitized austenitic stainless steels or hardened martensitic stainless steels or where it can come into contact with carbon steel parts, assemblies, equipment, and systems.

f. Most pickling solutions will loosen weld and heat treating scale but may not remove them completely. Intermittent scrubbing with a stainless steel brush or fiber-bristle brush, in conjunction with pickling acids may facilitate the removal of scale particles and products.

NOTE

Acid cleaning agents should not be used unless their application and performance are known (e.g., hardenable 400 series, maraging, and precipitation hardening stainless steel alloys are subject to hydrogen embrittlement or intergranular attack when

RELEASED - Printed documents may be obsolete; validate prior to use.

exposed to acids that can cause the generation of hydrogen on the item being cleaned. Cleaning by mechanical methods or other chemical methods is required).

6.6.5 Alkaline Cleaners

Alkaline cleaners are used for removal of organic and inorganic contamination (e.g., grease, shop oil, scale, and soluble metal oxides). Alkaline cleaners dissolve (etch) certain metals, such as aluminum and zinc. Types of alkaline cleaners include alkaline rust strippers, heavy duty alkaline cleaners, molten alkaline, alkali, alkali with nitrate, or phosphate.

6.6.6 Degreasers (Organic and Aqueous-Based Solvents)

Degreasers are used to remove some forms of organic contamination (e.g., oil, grease, and hydrocarbons).

6.6.7 Caustic Cleaners

Caustic cleaning with highly alkaline solutions is used for the removal of heavy or tenacious surface contamination followed by rinsing operation.

6.7 Precision Cleaning

a. Precision cleaning is performed after rough cleaning (except as noted below) and may be accomplished by employing methods such as solvent flushing or DI water impingement or to sonicate parts in an ultrasonic bath. This method is used to achieve a level of product cleanliness greater than visual means and requires cleanliness verification by particle count and/or by nonvolatile residue analysis as described in Table 3.

b. Precision clean articles shall be packaged immediately after cleanliness verification or protected before leaving the controlled environment.

c. All precision clean items (in accessible areas) shall be visually inspected before packaging and before installation in the fluid medium or system.

d. An item used in multiple media systems shall be cleaned to the most restrictive cleanliness level/requirements.

6.8 Field Cleaning

Field cleaning is permissible for systems or components that are required to be cleaned in place because of size and configuration (e.g., fluid transmission lines, large pipes, tanks, vessels, etc.). For all other systems or components, the provisions of Section 6.4 must be satisfied before field cleaning is allowed.

RELEASED - Printed documents may be obsolete; validate prior to use.

6.8.1 Preparation Before Field Cleaning

a. Before performing cleaning, all cognizant organizations shall be advised of the scheduled activities, and the appropriate process approvals and permits shall be obtained.

b. Components with moving parts, close tolerance fluid passages or zero flow velocity zones shall be replaced by pipe spool pieces or blind flanges or have all internal piece parts removed.

c. Components containing soft goods incompatible with the cleaning and test fluid shall be replaced with a temporary spool piece and/or a flange to prevent soft good degradation that could result from field cleaning/verification operations**.**

d. All pressure gages and other instrumentation shall be removed.

6.8.2 Decontamination

All systems, subsystems, components and equipment that have been exposed to toxic propellants or hazardous materials shall be decontaminated to the required levels of safe handling before initial cleaning operations.

6.8.3 System Considerations

Cleaning or flushing large or complex systems can deposit and concentrate contaminants in stagnant areas such as dead ends, sharp tubing bends, orifices and abrupt changes in internal diameter. Also, non-volatile cleaning agents may remain in trapped spaces and later react with oxidizers or generate particulates in cryogenic systems. Both NVR and particulate levels can increase after a system has been exposed to cryogenic fluids. This increase in contamination levels should be taken into consideration in establishing field methods for system cleaning and verification.

6.8.4 Installation of Temporary Hardware

All temporary hardware necessary to perform cleaning, functional and verification tests shall comply with the requirements in Section 6.4.5.

6.8.5 Pressure Tests

All items that require hydrostatic or pneumatic pressure tests shall comply with the requirements in Section 6.4.4 before cleaning.

6.8.6 Cleaning/Verification

Practices required for field cleaning and verification are as follows:

RELEASED - Printed documents may be obsolete; validate prior to use.

a. The flushing process for field cleaning/verification shall be performed by system flow through or closed loop circulation with a minimum velocity of 1.25 meters per second.

b. The flushing process shall be used only on items in which the total volume can be filled and all critical surfaces can be wetted by the solution.

c. Pressurized spraying using spray wands and rotating-head spray machines shall be required for impinging solution onto and wetting all internal surfaces of large items, such as storage vessel or pipes that cannot be cleaned or verified by flow through or closed loop circulation in Section 6.8.6(a).

d. Spray equipment shall be capable of delivering cleaning or verification solutions that forcibly impinge the entire critical surface of the item being cleaned or for cleanliness verification. It is desirable to provide provisions for draining the cleaning/verification agent faster than it is introduced to avoid accumulation.

e. Aqueous and semi-aqueous cleaning agents /residues and chemical cleaning agents / residues are often corrosive as well as incompatible with oxidizers and other commodities. Also, these cleaning agents can generate particulate matter while the system is in service. Effective rinsing with DI water (that conforms to Section 7.7.1 or Section 7.7.2) is mandatory to ensure that all residual cleaning agents are removed from the system. See Section 11 for acidity and alkalinity tests.

f. Solvent removal must meet the verification requirements in Section 13.

g. Quantitative test methods for precision cleanliness verification (particulate and/or NVR analysis) are outlined in Table 3.

6.8.7 Field Certification

The certification of system or component cleanliness levels may be performed in the field; however, verification processes that precede certification, such as sample analysis, are best performed in a laboratory.

6.8.8 Controlled Area Exceptions

a. Field cleaning operations cannot be performed in controlled areas; however, all operations shall be conducted in a manner that does not degrade the hardware cleanliness.

b. The performing organization shall provide shelters, enclosures, or a positive nitrogen or air purge of sufficient quantity that meets the requirements in Section 12.0a or 12.0b to prevent contamination of systems opened in the field.

c. These preventive measures shall comply with NASA-approved procedures.

RELEASED - Printed documents may be obsolete; validate prior to use.

NOTE

Nitrogen and inert gases can act as an asphyxiant by displacing the amount of oxygen (air) needed to support life.

6.8.9 Post-Verification Operations

a. Field hardware that meet cleanliness requirements do not need to be re-verified when contamination associated with field activities is completely accessible and can be removed by handwiping or purging (e.g., removal of loose, randomly scattered particles).

b. A certified NVR clean, lint-free cloth (nylon or polyester) that is heat sealed or double hemmed used for handwiping shall be moistened with a verification fluid that meets the requirements of this STD,

c. Handwiping shall be performed in such a manner that the fluid does not flow into or become entrapped in the hardware.

6.8.10 Post-Verification Inspection

Surfaces of all cleaned components that will contact the service fluid shall be visually inspected for the presence of gross contaminants.

6.8.11 Protection of Cleaned Systems/Items

a. All surfaces near openings shall be visibly clean of contamination before removal of temporary hardware and installing cleaned items.

b. Protection materials and packaging films shall comply with the requirements in Section 15.

c. Assembly installation and removal of precision cleaned components shall be done with utmost care to prevent contamination.

d. Certified clean gloves and tooling shall be used when handling cleaned significant surfaces.

6.9 Excepted Components/Items

a. Excepted components shall consist of items that cannot be processed per the requirements of this STD. Components, items, test equipment or instrumentation that cannot be cleaned or certified using normal procedures (because of their size, configuration, materials of construction, or method of assembly) may be certified as excepted components.

RELEASED - Printed documents may be obsolete; validate prior to use.

b. Excepted (EXC.) components shall require written approval of the cleaning and verification procedures by the customer or requester.

c. These items shall be cleaned as to the intent of this STD as practical and identified as "EXC" on all tags and documentation. EXC. items have a reduced cleanliness confidence.

6.10 Equivalent Cleaned Items

Items meeting the cleanliness requirements/levels of this STD via specified program or customer requirements or from NASA-approved engineering drawings/requirements do not require re-cleaning or reprocessing.

RELEASED - Printed documents may be obsolete; validate prior to use.

7. CLEANING FLUIDS, VERIFICATION FLUIDS, AND RINSING AGENTS

7.1 General

a. Traceability of cleaning fluids, verification fluids, and rinsing agents must be maintained throughout the cleaning and verification process.

b. Traceability documentation shall include, at a minimum, fluid cleanliness certifications and product composition reports.

7.2 Compatibility

a. Cleaning fluids, verification fluids, and rinsing agents must be compatible with the item being cleaned, verified, or rinsed and shall not cause immediate or latent degradation (e.g., leaching of plasticizers or swelling of soft goods or hardware corrosion).

b. Items that are completely or partially fabricated from polychlorotrifluorethyene (e.g., Kel-F® or Neoflon®) shall not be exposed to halogenated solvents while stressed. Concealment of crack indications from cleaning fluids and cleaner residues should be carefully considered and evaluated.

c. The performing organization must also ensure that cleaning, verification, and rinsing processes that employ dissimilar fluids do not degrade hardware (e.g., halogenated solvents and water are corrosive to some metals).

d. Parts and components shall be rinsed or rinsed and dried between operations as required to prevent the formation of corrosive mixtures.

7.3 Halogenated Solvents

a. When used for cleanliness verification, halogenated solvents shall comply with the latest revision of the applicable procurement specifications referenced in Sections 7.3.1 through 7.3.10.

b. In addition, the solvent shall meet the cleanliness requirements of the cleaned item or system. When the required NVR level of the solvent is less than the procurement specification, the solvent may need to be distilled to obtain the required NVR level as required in Section 8.1

7.3.1 Trichlorotrifluoroethane (CFC-113)

CFC-113 may be used to perform NVR and/or particulate analysis, but it shall **not** be used on titanium alloys, for hydrazine-based (MMH, UDMH, or N_2H_4) service items, or

RELEASED - Printed documents may be obsolete; validate prior to use.

for flushing hydraulic components or systems. For procurement specification requirements, refer to MIL-C-81302, Type 1, or to Table A–1.

7.3.2 HCFC-225g (AK-225g)

HCFC-225g may be used to perform NVR and/or particulate analysis, but it shall **not** be used for hydrazine-based (MMH, UDMH, or N_2H_4) service items or for flushing hydraulic components/ systems. HCFC-225g has the following isomer ratio: cb > 98% / ca < 2%. For procurement specification requirements, refer to KSC SPEC-P-0022 or to Table A–2.

7.3.3 HCFC-225 ca/cb (AK-225)

HCFC-225 may be used to perform NVR and/or particulate analysis, but it shall **not** be used for hydrazine-based (MMH, UDMH, or N_2H_4) service items or for flushing hydraulic components/systems. HCFC-225 has the following approximate isomer ratios: ca 45–55% / cb 44–55%. The ca isomer has a lower threshold limit value than the cb isomer (refer to the appropriate Material Safety Data Sheet). For procurement specification requirements, refer to Table A–3.

7.3.4 1,1,1 Trichloroethane (Methyl Chloroform)

1,1,1 Trichloroethane may be used to perform NVR and/or particulate analysis, but it shall **not** be used on titanium alloys for service with hydrazine-based (MMH, UDMH or N_2H_4) service items or for flushing hydraulic components or systems. For procurement specification requirements, refer to MIL-T-81533.

7.3.5 Tetrachloroethylene (Perchloroethylene)

a. Tetrachloroethylene may be used to perform NVR and/or particulate analysis, but it shall **not** be used for titanium alloys or for service with hydrazine-based (MMH, UDMH, or N_2H_4) items, soft goods, or hydraulic components/systems.

b. When used for cleanliness verification, tetrachloroethylene shall **not** be used on items that contain enclosed or entrapped areas (e.g., items or assemblies with a complex geometry or close tolerance fluid passages, etc.). Tetrachloroethylene has an oxygen AIT < 400 deg. F @ 50 psig.

c. Items or systems with NVR requirements shall be pre-dried in accordance with Section 12(a) flushed with HFE-7100® and verified to ensure solvent removal in accordance with Section 13.0 For procurement specification requirements, refer to ASTM D 4376 (for vapor degreasing only) or to ACS *Reagent Chemicals: Specifications and Procedures* (for cleaning and verification).

RELEASED - Printed documents may be obsolete; validate prior to use.

7.3.6 Trichloroethylene

Trichloroethylene may be used to perform NVR and/or particulate analysis, but it shall **not** be used on titanium alloys, for hydrazine-based (MMH, UDMH, or N_2H_4) service items, or for flushing hydraulic components or systems. For procurement specification requirements, refer to Mil-C-81302 or to ASTM D 4080.

7.3.7 Methoxynonafluorobutane (Hydrofluoroether-7100, HFE-7100®)

a. Perfluorobutylmethylether (HFE-7100®) may be used to perform NVR or particulate analysis as a rinsing agent to remove Vertrel MCA® from items with an NVR requirement. HFE-7100® shall **not** be used for flushing hydraulic components or systems or with MMH or N_2H_4**.**

b. Exception: HFE-7100 may be used as a cleaning or test solvent if the removal of MMH from the item or system is verified to be less than 5 ppm. An NVR correction sensitivity factor is required to correct for the efficiency of HFE 7100 to remove non-volatile (hydrocarbon-based residue) from critical surfaces. See appendix B-1 for NVR correction factor. For procurement specification requirements, refer to A-A-59150 or to Table A–4.

7.3.8 Decafluoropentane 62% & Trans-1,2-Dichloroethylene 38% (Vertrel MCA®)

a. Vertrel MCA® may be used to perform NVR and/or particulate analysis, but it shall **not** be used for service with either MMH or N_2H_4, for soft goods that have an NVR requirement, with titanium alloys, or with hydraulic components or systems.

b. Items or systems with NVR requirements shall be pre-dried in accordance with Section 13 flushed with HFE-7100® and verified to ensure solvent removal in accordance with Section 13**.** Vertrel MCA does **not** meet the liquid oxygen compatibility requirements of NASA-STD-6001. For procurement specification requirements, refer to KSC SPEC P 0019 or to Table A–5.

7.3.9 Decafluoropentane (HFC-4310 mee or Vertrel XF®)

a. Vertrel XF® may be used to perform particulate analysis, but it shall **not** be used for service with either MMH or N_2H_4, as a test fluid for NVR analysis or for flushing hydraulic components or systems.

b. Exception: Vertrel XF® may be used as a cleaning or particulate only test solvent if the removal of MMH from the item or system is verified to be less than 10 ppm. For procurement specification requirements, refer to KSC SPEC P 0021 or to Table A–6.

RELEASED - Printed documents may be obsolete; validate prior to use.

7.3.10 normal-Propyl Bromide (Ensolv®)

a. normal-Propyl Bromide (n-propyl bromide) use is limited to NVR and/or particulate analysis for single items with simple geometry (e.g. open pipes and lines) and are physically isolated from the fluid system and other components.

b. It shall **not** be used for hydrazine-based (MMH, UDMH, or N_2H_4) service items or for NVR and/or particulate analysis for components, assemblies, systems, or other items (e.g., reflanged seal rings, IM&TE). The solvent must meet the NVR and particulate level of the systems being verified. Normal-propyl-bromide (Ensolv®) does **not** meet the liquid oxygen compatibility requirements of NASA-STD-6001. Verify solvent removal in accordance with Section 13. For procurement specification requirements, refer to ASTM D 6368.

c. normal-Propyl Bromide (nPB) shall not be used on titanium or parts containing titanium.

7.4 Alcohol Solvents

a. All alcohol solvents used for testing shall comply with the latest procurement specifications.

b. In addition, the alcohol control solvent shall meet the cleanliness requirements of the item being cleaned.

c. Alcohol solvents shall **not** be used for cleaning, verifying, or rinsing oxidizer systems (hardware and soft goods) or on any system that feeds into an oxidizer system.

d. If approved by the procuring organization or NASA Engineering, alcohol solvents can be used to clean IM&TE or AM&TE items. Items with NVR requirements shall be flushed with AK255g or HFE 7100 and verified to ensure solvent in accordance with Section 13.

7.4.1 Isopropyl Alcohol

Isopropyl alcohol (isopropanol) may be used to perform particulate analysis, but it shall **not** be used as a test fluid for NVR analysis. For procurement requirements, refer to specification TT-I-735, Grade A, or *Reagent Chemicals: Specifications and Procedures*.

7.4.2 Ethyl Alcohol

Ethyl alcohol (ethanol) may be used to perform particulate analysis, but it shall **not** be used as a test fluid for NVR analysis. For procurement requirements, refer to *Reagent Chemicals: Specifications and Procedures*.

RELEASED - Printed documents may be obsolete; validate prior to use.

7.5 DI Water

7.5.1 DI Water Verification Reagent (Used for Cleanliness Verification)

a. When used as a verification reagent or final rinse for items that have a NVR requirement, the DI water shall have a specific resistance greater than 1 meg-ohm-cm or a conductivity of less than 1 micro-Siemen/cm, the total carbon content must be less than 1 ppm (mg/L) and shall exceed the particulate cleanliness level for the cleaned item. In addition, DI water shall require use of mechanical and/or thermal energy (e.g. high velocity impingment, sonification, and/or heat).

   NOTE: Pouring or flushing DI water through a component/item and collecting the effluent is **not** an acceptable NVR verification process. Verification and analysis methods must conform to a procedure that is approved by NASA Engineering and supported with test data that demonstrates the efficacy of the process for the affected item or assembly.

b. When used as a verification reagent or final rinse for items that have a "particulate only " requirement, the DI water shall have a specific resistance greater than 1 meg-ohm-cm or a conductivity of less than 1 micro-Siemen/cm and must meet or exceed the particulate cleanliness level for the cleaned item.

c. High-purity water in accordance with JSC-SPEC-C-20, Grade A, is an acceptable substitute as an NVR or particulate verification reagent or ASTM D 1193 Type II water except that the total carbon content must be less than 1 ppm and shall meet the particulate cleanliness level for the cleaned item.

7.5.2 DI Water Rinsing Agent

a. When used for rinsing operations, the DI water shall have a minimum specific resistance of 50,000 ohms/cm or a specific conductance less than 20 micro-Siemens/cm.

b. The DI water rinsing agent cannot be used to satisfy or verify any cleanliness verification process requirements (NVR and/or particulate) or as final flush/rinse on any precision-cleaned hardware.

7.5.3 Hydraulic Fluids for Cleanliness Verification

a. Use of hydraulic fluid is limited to flushing, particle population analysis for cleanliness certification, and functional testing of hydraulic systems. Hydraulic components may be sampled by test method VIII in accordance with Table 3.

b. Hydraulic fluids used for cleanliness verification or to perform functional tests or to preserve items shall meet the component or system cleanliness level requirements.

RELEASED - Printed documents may be obsolete; validate prior to use.

8. FLUID CONTROL REQUIREMENTS

8.1 Solvent Control Samples

a. Verification fluids (final rinsing fluids) shall be sampled daily or before use on hardware with cleanliness levels requiring an NVR or particulate analysis.

b. Fluids dispensed from small volume (10 gallons or less) stainless steel containers and suitability protected from external contamination need only be tested after each filling or addition of fluid. Verification fluids and final rinsing agents must meet the NVR and the particulate (cleanliness) requirements of the item being verified or rinsed.

c. The control sample used to sample or rinse tanks and vessels that have an NVR requirement shall have no more than 3 mg NVR per 100 ml of fluid.

d. The control sample (solvent blank) for all other items that have an NVR requirement shall have no more than 1 mg NVR per 200 ml of fluid.

e. When the control (blank) sample of a fluid does not meet the appropriate NVR requirement, the fluid cannot be used. The fluid must be distilled and re-sampled to verify that the NVR requirement is met. When the control sample of a fluid does not meet the appropriate particulate requirement, the fluid cannot be used. The fluid must be filtered through a clean 25 micron or smaller wire mesh filter and re-sampled to verify that the particulate requirement is satisfied.

8.2 Solvent Verification (Test) Samples

Test samples can be obtained by flushing or spraying significant surfaces with certified halogenated, alcohol solvents and hydraulic fluids that comply with the requirements in Section 7. All solvents used for NVR determination must meet the requirements in Sections 7.1 or 7.3. To calculate the NVR, the control solvent sample is subtracted from the solvent verification sample. The requesting organization is responsible for making this NVR adjustment. Subtraction of the control solvent from the test solvent is not allowed for particulate analysis.

8.3 Solvent Volume Required For Cleanliness Verification

8.3.1 Items with Surface Area Less Than 0.1m^2

a. Small components consist of a sufficient number to make up 0.1 m^2 surface area. The components selected shall provide an accurate representation of the lot (e.g. similar size and configuration). In this context, a lot does not necessarily require identical parts, but does require that all parts in the lot be cleaned using the same basic process.

b. A 200-ml sample shall be collected and analyzed.

RELEASED - Printed documents may be obsolete; validate prior to use.

c. In cases where all critical surfaces can be sampled with 100 ml or less of test fluid, a 100-ml sample shall be taken and analyzed to represent 0.1 m^2.

d. For IM&TE and AM&TE with surface areas less than 0.01m^2, solvent volumes less than 100ml may be used. Details of the cleaning process procedure shall be left to the discretion of the performing organization.

e. The process shall not be detrimental to the items being cleaned.

f. Process requirements, (cleaning steps, verification procedures, and drying requirements) shall be approved by the procuring organization and/or the performing organizations Quality Assurance.

8.3.2 Items with Surface Area Between 0.1 and 0.5 m^2

a. Significant surfaces having an area between 0.1 m^2 and 0.5 m^2 require 200 ml of sampling fluid per 0.1 m^2.

b. All sample fluid shall be collected and a 200-ml representative aliquot shall be taken from the total fluid collected and analyzed.

8.3.3 Components/Items With Surface Area Greater Than 0.5m^2

a. Significant surfaces having an area greater than 0.5 m^2 shall be flushed with 100 ml of sampling fluid per 0.1 m^2.

b. All sample fluid must be collected and a 100 ml representative sample shall be taken from the total fluid collected and analyzed.

RELEASED - Printed documents may be obsolete; validate prior to use.

9. VISUAL CLEANING CERTIFICATION

9.1 Visual Cleanliness

The Visual Cleanliness category includes GC, VC, and UV (see Sections 4.2and 4.3).

All significant surfaces that contact service fluids require VC inspection: the absence of all particulate and non-particulate matter visible to the normal unaided (except corrected vision) eye unless the surface is inaccessible. If visual evidence of contamination is found in a component or system, the foreign material must be analyzed to determine its identity, source, and compatibility with the service fluid. Scale-free discoloration due to welding, etching, heat treating, and passivation of lines, components, or surfaces is permitted.

VC inspection requirements must be satisfied before precision cleaning steps (e.g. UV, 100A, 200) can proceed.

9.2 Flash Rust

a. Visible, scale-free surface oxidation (flash rust) is allowed on significant surfaces; however, it shall not exceed 10 percent of the internal significant surface area of systems or components.

b. Furthermore, flash rust is not acceptable if it prevents the system or component from meeting cleanliness requirements.

9.3 Inspection Aids

a. Surfaces inaccessible to visual inspection may be visually inspected using a borescope and other inspection aids (e.g., swab samples for NVR)**.** Inspection aids must meet the cleanliness requirements of the system or component on which they are used.

b. The water break test may be used to aid visual inspection on horizontal surfaces. A small quantity of 20 micron or smaller filtered DI water that conforms to Section 7.5.1is poured over the cleaned surface. The water should form an unbroken film on the metal surface. If water collects into a series of small droplets before 5 seconds, the part shall be re-cleaned. Materials with rough or porous substrates will not always present water break-free surfaces even if cleaned (e.g., aluminum castings).

c. The DI water shall be dried from the treated surface by blotting with a cleaned swab or wipe or by purging with dry nitrogen that conforms to Section 12a.

RELEASED - Printed documents may be obsolete; validate prior to use.

9.4 UV Cleanliness Level

a. UV cleanliness is visibly clean (as defined above) and inspected with the aid of an ultraviolet light (black light) of 3200 to 3800 Angstroms. This level requires precision cleaning methods.

b. Any visible contamination or fluorescence shall be cause for re-cleaning.

c. If re-cleaning does not reduce fluorescence, an investigation shall be made to determine whether the fluorescing material is contamination or if the item material is naturally fluorescent.

d. UV lights must meet the cleanliness requirements of the system or component on which they are used.

RELEASED - Printed documents may be obsolete; validate prior to use.

10. QUANTITATIVE CLEANLINESS CERTIFICATION

The quantitative cleanliness methods imposed by this standard are described in Table 3. Alternative procedures may be used upon qualification and approval by NASA Engineering and/or the procuring organization.

Table 3. Quantitative cleanliness verification methods.

Verification Method	Sampling Technique	Analysis Method
Method I – Particle Size and Count Determination for items w/o an NVR requirement)	Component/Item Flush with Non-Halogenated Solvents or DI Verification Reagent	Filtration & Manual Particle Count
Method II – NVR or Particle Population Count	Component/Item Flush with Halogenated Solvent	Manual Particle Count, Gravimetric NVR, or Infrared NVR
Method III – NVR Using DI Water Verification Reagent	Ultrasonic Extraction or Impingement Method	TOC NVR
Method IV – Particle Population or NVR for Fluid Transmission Lines	Spool Piece	Manual Particle Count, Gravimetric NVR, or Infrared NVR
Method V – NVR and Particulate for In Service Systems	Gas Flow Through (1) with Sintered Porous Disc for NVR (2) Membrane Filter for Particle Count	Particle Count & Infrared NVR
Method VI – Particulate and NVR for Field Cleaned Items and for Certain Excepted Components	Solvent Flow through Method	Particle Count and NVR using Gravimetric or IR
Method VII – Specialized NVR	Wipe samples from representative critical surface area	Gravimetric or IR NVR
Method VIII – Hydraulic Fluid Test for Particulate Analysis	Flush with Hydraulic Fluid for Hydraulic Components or Systems	Filtration and Manual Particle Count

10.1 Method I – Component/ /Item Flush with Non-Halogenated Solvents or DI Verification Reagent

a. Liquid flush test for particle population remaining on critical surfaces normally cleaned in a controlled environment (applicable for components, small items, IM&TE, etc. that do not have an NVR requirement) using a cleanliness verification fluid that conforms to the requirements in Sections 7.4 or 7.5.1.

RELEASED - Printed documents may be obsolete; validate prior to use.

b. Ascertain total volume of test fluid to flush clean item or items in accordance with Section 8.3.

c. If flushing does not reach all critical surfaces, the item shall be rolled or positioned so critical surfaces are wetted.

d. Perform particle count per ASTM F312, SAE ARP 598, Appendix B or approval by NASA Engineering and/or the procuring organization.

10.2 Method II – Component or Item Flush with Halogenated Solvent

a. A liquid flush shall be performed with halogenated solvents for NVR or particulate analysis on critical surfaces of items cleaned in a controlled environment (applicable for components, small items, IM&TE, etc.).

b. Use an appropriate solvent volume that conforms to the surface area requirements in Section 8.3.

c. Where flushing does not reach all critical surfaces, the item shall be rolled or positioned so critical surfaces are wetted. Perform particle count per ASTM F312, SAE ARP 598, or Appendix B. NVR methods are also provided in Appendix B or approval by NASA Engineering and/or the procuring organization.

10.3 Method III – NVR Using DI Water Verification Reagent

a. This NVR method uses ultrasonic agitation or impingement on components in high purity water for total carbon analysis. Total NVR is expressed as total carbon content.

b. DI water verification reagent shall conform to Section 7.5.1. An example of acceptable method is provided in Appendix B or approval by NASA Engineering and/or the procuring organization.

10.4 Method IV – NVR and Particle Determination for Fluid Transmission Lines

In a complex piping system it may be difficult to determine how effective a field cleaning operation has been. One method of performing cleanliness verification for long pipe sections is to provide a short flanged length of pipe (e.g., spool piece) at a location where the cleaning is likely to be least effective. The spool piece can be removed for NVR or particulate verification upon completion. An acceptable method is provided in Appendix C or approval by NASA Engineering and/or the procuring organization.

10.5 Method V – NVR and Particle Determination for In-Service Systems

a. A gas flow test shall be performed to evaluate a systems capability to deliver fluid that meets the specified cleanliness requirements (for in-service systems). Test method is specified in Appendix D.

RELEASED - Printed documents may be obsolete; validate prior to use.

b. This method shall not be used to:
   1. Certify a new system.
   2. Certify the cleanliness of components.
   3. Recertify any component or system that has been decertified.
   4. Recertify any component or system that is maintained cleaned.

10.6 Method VI – Solvent Flow Through Method

a. A solvent flow-through test for monitoring particle population and NVR remaining on critical surfaces of items cleaned in the field shall be performed in the following manner:

   1. Flow test fluid through the item at a minimum velocity of 1.25 meters per second (m/s) or from a sample that forcibly impinges the critical surface.
   2. Collect a representative test fluid sample in a precision-cleaned container and submit sample for testing.

b. This method shall be used only on items in which all critical surfaces can be wetted by the solvent

c. Assembled items may be processed as EXC components by the solvent flow through method if the assembled items are designed so neither lubricated surfaces nor soft goods can be degraded by the test fluids when exposed to fluid flow paths.

10.7 Method VII – Wipe Samples from Representative Critical Surface Area

a. This sampling method is performed by wiping a representative area of up to 0.1 m^2 (one square foot) with a certified clean, solvent-soaked, lint-free nylon or polyester wipe.

b. The ends of the wipe shall be double hemmed or heat sealed.

c. After wiping the area to be verified, each wipe shall be flushed with approximately 200 ml of solvent and analyzed for NVR. Surfaces > 0.4 m^2 will require additional random wipe tests to ensure that a representative portion of the surface area is sampled.

d. Caution is necessary on cast items and metals such as aluminum not to rub hard enough to generate lint particles or to degrade treated surfaces. This method may be used for excepted components or for large vessels or items cleaned in the field. An analysis method is provided in Appendix E**.**

10.8 Method VIII – Hydraulic Fluid Flush for Particulate Verification

a. Hydraulic components may be sampled for particle population analysis.

b. Hydraulic Fluid used for particle analysis and functional testing shall be specified by the requester or program requirements.

RELEASED - Printed documents may be obsolete; validate prior to use.

11. ACIDITY AND ALKALINITY TEST

a. Internal and external surfaces that have been cleaned or that have come in contact with aqueous or semi-aqueous media or chemical solutions (e.g., caustics, acids, etc.) shall be tested for acidity and alkalinity by rinsing with DI water while the surfaces are wet from the final cleaning process.

b. The surface acidity or alkalinity must register a pH between 5.5 and 8.0 or ± 0.4 pH of the rinse water source.

c. Items that fail this requirement shall be reprocessed or rinsed. The rinse water shall conform to the requirements in7.5.1 or 7.5.2.

RELEASED - Printed documents may be obsolete; validate prior to use.

12. GAS REQUIREMENTS

a. Gases used for drying, functional testing, hydrostatic or pneumatic testing of cleaned components shall comply to one of the following specifications and will be certified monthly at the "site user interface points" (e.g. commodity certification sample points).

Also, gases used at processing points (e.g., work stations), shall be tested weekly for moisture, total gaseous hydrocarbon content, and particulates per the specification requirements in this section.

1. Nitrogen (N_2), Federal Spec., A-A 59503, Nitrogen Technical, Type 1 Class 1 Grade B and filtered with no particles > 100 microns.
2. Nitrogen, Military Spec., MIL-PRF-27401, Type 1, Grade A and filtered with no particles > 100 microns.
3. Helium, Military Spec., MIL-PRF-27407, Grade A and filtered with no particles > 100 microns.
4. Nitrogen, Helium, or Air that meets the user interface requirements in MSFC 3535.
5. Argon, Military Spec., MIL-PRF-27415m Propellant Pressurizing Agent, Grade A or B and filtered with no particles > 100 microns.
6. Argon CGA G11.1, Commodity specification for Argon, Quality Verification Level C, D, E, or F and filtered with no particles > 100 microns.

b. Gases used for preserving (package and seal) test items shall comply to one of the following requirements:

1. Nitrogen (N_2), Federal Spec., A-A 59503, Nitrogen Technical, Type 1 Class 1 Grade B and filtered with no particles > 100 microns.
2. Nitrogen, Military. Spec., MIL-PRF-27401, Type 1, Grade A and filtered with no particles > 100 microns.
3. Argon, Military Spec., MIL-PRF-27415 Propellant Pressurizing Agent, Grade A or B and filtered with no particles > 100 microns.
4. Argon CGA G11.1, Commodity specification for Argon, Quality Verification Level C, D, E, or F and filtered with no particles > 100 microns.
5. Nitrogen that meets the user interface requirements in MSFC 3535.

RELEASED - Printed documents may be obsolete; validate prior to use.

13. SOLVENT REMOVAL VERIFICATION

a. Following use of any solvent on items or systems with NVR requirements, verification is required to ensure that the solvent has been thoroughly removed from the item or system.

b. Solvent removal verification from significant surfaces shall be performed in accordance with a NASA-approved procedure.

c. The item or system shall be purged or locked up with a gas that conforms to the requirements in Section 12.0(b).

d. A gas sample shall be taken from the item or system and analyzed to verify that the total gaseous hydrocarbon content is less than 5 ppm expressed as methane. This verification step must be supported with laboratory test data that demonstrates removal of the solvent for the affected item or system. A solvent removal test is not required for items that are dried using the thermal vacuum bake out processes in Section 14.3.

e. The drying and solvent removal verification process shall be performed after all solvent rinse/flush procedures.

f. The same gas sample used to measure moisture or dew point in accordance with section 14 may be used for verification. If the same gas sample is not used, the requirements and limits for gas flow or pressure hold/lockup times and pressures stated in Sections 14.1 or 14.2 (for moisture removal) apply for obtaining gas samples for solvent removal verification.

RELEASED - Printed documents may be obsolete; validate prior to use.

14. DRYNESS VERIFICATION (MOISTURE REMOVAL)

a. After testing for particulate population and/or NVR analysis, all items shall be dried.

b. The item or system shall be purged or locked up with nitrogen, air or helium that conforms to the requirements in Section 12.

14.1 Purge Method

a. For all lines and components, flow drying gas per Section 12.0(b) through or over the affected surfaces for a minimum of 30 minutes. Monitor the dew point leaving the affected item. The moisture content of the effluent gas shall not exceed 24 ppm.

b. For tanks and vessels, flow drying gas that conforms to Section 12.0(b) through the affected surfaces for a minimum of one hour. The moisture content of the effluent gas shall not exceed 128 ppm.

c. The maximum temperature of the drying gas for metallics shall be 120°C (248°F).

d. If non-metallics are present, the temperature of the drying gas shall not exceed 60°C (140°F) unless a higher temperature is approved by NASA Engineering or the requesting organization.

NOTE: If the effluent gas exceeds the allowable limit, continue purging the items(s) periodically until the test requirements are met.

14.2 Static Pressurization Method

a. For lines and components, pressurize the item to at least 50 percent of the item's working pressure with drying gas that conforms to Section 12.0(b). Lock up the gas and maintain elevated pressure within the item for a minimum of one hour. Following the lockup period the moisture content of the released gas shall not exceed 24 ppm.

b. For tanks and vessels, pressurize the item with drying gas that conforms to Section 12.0(b) to at least 50 percent of the item's working pressure. Maintain the lockup pressure for a minimum of eight hours. Following the lockup period, the moisture content of the released gas shall not exceed 128 ppm.

c. The minimum temperature of the drying gas at the point of entry shall be 45°C (113°F).

d. The maximum temperature of the drying gas for metallics shall be 120°C (248°F).

RELEASED - Printed documents may be obsolete; validate prior to use.

e. If non-metallics are present, the temperature of the drying gas shall not exceed 60°C (140°F) unless a higher temperature is approved by NASA Engineering or the requesting organization.

f. The temperature of the lockup gas is not required to be maintained while locked in the vessel or item.

NOTE: If the released gas exceeds the allowable limit, continue the lockup cycles until the test requirements are met.

14.3 Bakeout

14.3.1 Thermal -Vacuum Bakeout

Component parts $\leq 0.1m^2$, IMTE, AMTE and gas samplers (cylinders) can be placed in the vacuum oven. The oven shall be closed and purged with inert test gas in accordance with Section 12 (a) and then shall be heated to the desired vacuum drying temperature. Parts temperature should be governed by the following criteria:

a. The minimum target drying temperature for all parts shall be 43º (110º F).

b. The maximum target drying temperature for parts containing non-metallics shall be 63ºC (145ºF). Caution: some plastics may soften at temperatures below 63ºC(145ºF). If plastic properties are unknown, contact the procuring activity for approval.

c. The maximum target temperature for drying metallic parts shall be 120 ºC (248º F).

Once the items have reached the desired temperature, a vacuum should be drawn on the items and maintained. Recommended vacuum drying times, relative to oven temperature and pressure, are specified in Appendix F.

NOTE: Unless approved by the procuring activity or NASA Engineering, formed lip seals and non-metallic convoluted diaphragms shall not be oven dried (heated).

14.3.2 Ambient Pressure Bakeout

Parts and components with an internal surface area of $<0.4m^2$, can be placed in an oven and heated to dry. The oven shall be closed and constantly purged with inert test gas in accordance with Section 12 (a) and shall be heated. Part's temperature will be governed by the following criteria:

a. The minimum target drying temperature for all parts shall be 45º C.

b. The maximum drying temperature for parts containing metallic only parts is 120 ºC.

c. The maximum drying temperature for parts containing non-metallics shall be 69º C.

RELEASED - Printed documents may be obsolete; validate prior to use.

NOTE: The details of the drying procedure (maximum temperature, hold time, etc.) shall be left to the discretion of the performing organization subject to approval of the procurement and NASA engineering authority of NASA.

RELEASED - Printed documents may be obsolete; validate prior to use.

15. PROTECTION AND PACKAGING OF CLEANED ITEMS

15.1 General

a. Cleaning is a perishable condition; consequently, proper handling and packaging to preserve the surface cleanliness level is a critical process. All protective materials, devices, and closures shall be compatible with the system or component-critical surface in contact with the protective material.

b. Protective materials shall be designed to withstand the specified environment for the storage period and mode of delivery, including impact protection of critical surfaces.

c. Preservative and lubricant materials used inside the primary and secondary packaging on items that have been precision cleaned shall:

   1. Be compatible with the service media and in-service operating conditions.
   2. Not compromise cleanliness levels of the respective items.
   3. Be used sparingly (minimum amounts required to provide the needed protection of item surfaces) and only where absolutely necessary.

d. Installation of primary packaging films onto and around openings and other orifices of precision cleaned items or the enclosure of precision cleaned items into the inner bags (made of the primary packaging film) shall be performed in an environment equal to or cleaner than the environment in which the respective items were cleaned and certified.

e. Installation of metallic caps, plugs, blind flanges, and hubs onto and into openings or other orifices of precision cleaned items without the use of packaging films (e.g., blind flange or hub not used in conjunction with or as a protective barrier for packaging films) shall be performed in an environment equal to or cleaner than the environment in which the respective items were cleaned and certified.

f. Installation of protective devices and secondary packaging films shall be performed within a time period and in an environment that prevents damage to primary packaging, potential contamination of precision cleaned surfaces, and visible contamination on any item surfaces and packaging films.

g. Any signs of visible contamination on packaging films prior to completed installation of secondary packaging films and protective barriers shall be cause for repeating clean level solvent sample collection and analysis, clean level verification and certification processes, and any precision cleaning processes deemed necessary to assure restoration of required cleanliness level.

h. Rubber, paper, non-metallic materials not listed in Table 4, aluminum foil, or other non-approved materials shall not be used on precision cleaned surfaces.

RELEASED - Printed documents may be obsolete; validate prior to use.

15.2 Packaging Films

a. All plastic films used for precision packaging shall comply with the requirements of Table 4.

b. Selection of a specific film shall be dictated by compatibility with the specified service medium.

c. The cleanliness level of the inner wrap shall be at least equal to the item's exposed, cleaned surfaces.

d. All parts that come in contact with oxygen, hydrogen peroxide, other oxidizers, or hypergols shall be protected with an inner bag or layers of a fluorohalocarbon film, such as Aclar 22A, or polyfluoroethylenepropylene (FEP) film conforming to requirements indicated and documents referenced in Table 4.

e. Other parts, components, subsystems, and systems (that do not come in contact with oxygen, hydrogen peroxide, other oxidizers, or hypergols) shall be protected with an inner bag or with layers of a polyamide film or a fluorohalocarbon film conforming to requirements indicated and documents referenced in Table 4. Polyamide films have a higher resistance to sloughing particles, while fluorocarbon or halocarbon films provide a better barrier to moisture vapor and gas permeability. If unique packaging requirements exist, such as flammability, electrostatic discharge, and/or hypergolic propellant compatibility, a plastic film other than polyethylene may be selected for use as an overwrap material.

f. All clean film, including bags, sheeting, tubing, and roll stock, that is not used immediately after cleaning shall be overwrapped and sealed in an inner bag made from clean film of the same type.

g. All film procured clean shall be overwrapped with a second bag of clean, 152 μm (6 mils) thick polyethylene before packaging for shipment.

h. Roll stock shall be wound on clean cores made from non-dusting plastic or metal.

i. Plastic media in low humidity conditions can develop static charges that can attract ionic contaminates (e.g., dust, dirt, particulates). Precautions should be taken to minimize any secondary contamination transfer to critical surfaces.

j. Tape used for the packaging of precision cleaned items shall conform to A-A-1689.

RELEASED - Printed documents may be obsolete; validate prior to use.

k. The GC level does not require a cleanliness certification tag or sticker, since protective contamination control packaging is not required.

Table 4. Packaging Materials Thickness and Service Requirements

Plastic Film	Thickness Range in Micrometers	Use
Polyethylene in accordance with A-A-3174	137 to 168 (5.4 to 6.6 mils)	Overwrap (secondary packaging), except may be used for inner wrap of items cleaned to level VC
Nylon 6 or equivalent polyamide	43 to 58 (1.7 to 2.3 mils)	Precision (primary) packaging; not for liquid and gaseous oxygen, hydrogen peroxide, other oxidizer, or for hypergol service
Aclar 22A, per SAE-AMS 3649 or equivalent	38 to 76 (1.5 to 3.0 mils)	Precision (primary) packaging; suitable for liquid and gaseous oxygen, hydrogen peroxide, other oxidizer, and hypergol service
Virgin PTFE FEP or equivalent polyfluoroethylenepropylene in accordance with SAE-AMS 3647	13 to 508 (0.5 to 20 mils)	Precision (primary) packaging; suitable for liquid and gaseous oxygen, hydrogen peroxide, other oxidizer, and for hypergol service

15.3 Metallic Closures

a. Metallic closures, such as plates, blind hubs and flanges, threaded plugs, and caps, may be used instead of packaging films on item end and nozzle connections to protect precision cleaned surfaces from contamination. If and when used for this purpose, seals or gaskets shall be used to prevent entry of air or moisture into internal volumes and onto precision cleaned surfaces of items that are internally cleaned only (refer to Section 15.8.2 for further packaging details about these types of items).

b. For cases where the internal volume of a precision cleaned item (e.g., vessel, tank, pipe spool, valve, or other fluid component) is pressurized with an inert gas, metallic closures shall be used instead of packaging films to protect internal precision cleaned surfaces from damage and contamination.

c. To prevent electrolytic corrosion, metals dissimilar to the item flanges, hub connections, and threaded connections (e.g., stainless steel versus carbon steel) shall not be used where metal-to-metal contact can or will occur, including this type of contact with studs, bolts, nuts, clamps, washers, other fasteners, and spacers. Dissimilar metals may be used for metallic closures only where insulating spacers or dielectric couplings, gaskets, or seals are used properly and in a way to prevent

RELEASED - Printed documents may be obsolete; validate prior to use.

contact between the dissimilar metals. Refer to MIL-STD-889 for corrosion and definition of dissimilar metals.

d. Gaskets or seal rings used with metallic closures shall be the same as those to be used when the precision cleaned item is installed for and placed into operational service, except that PTFE sheets may be used as gaskets for face-to-face sealing of flange and hub connections.

e. PTFE sheets used as gaskets for face-to-face sealing of flanges and hub connections shall be precut from a sheet of polytetrafluoroethylene of 1.57 mm (0.062 inch) minimum thickness.

f. When and where metallic plates are used instead of blind hubs and flanges, the plate thickness shall be no less than 3.18 mm (0.125 inch). Metallic plates shall not be used as substitutes for threaded cap and plug fittings.

g. The cleanliness level of gaskets, seals, and critical surfaces of metallic closures shall be at least equal to the level of cleanliness of the cleaned item being protected.

h. All threaded fittings and fasteners, including studs, bolts, nuts, and clamps, shall be installed and torqued or pre-loaded to provide seal/gasket loading for leak-tight sealing that prevents leakage of gas or moisture into or out of openings or orifices with attached metallic closures.

i. Use of packaging film is not required when and where metallic closures are used in accordance with this section. However, secondary packaging film may be used around these closures if extra safety precautions are desired or deemed necessary or to enclose certification card(s) in accordance with Section 15.8.6.

15.4 Protective Devices

a. When and where metallic closures are used in accordance with Section 15.3, additional protective devices are not required.

b. When packaging films are used in accordance with Section 15.2 to prevent contaminant entry onto precision cleaned critical surfaces, all openings or other orifices with an inside diameter or maximum edge-to-edge dimension greater than 38.1 mm (1.5 inch) shall be covered with wood, hardboard, plastic, or metallic barriers (shields).

c. If metallic shields are used, they shall be blind flanges, blind hubs, or plates as described in Section 15.3.

d. Insulating or dielectric spacer materials shall be used to prevent contact between dissimilar metals when metallic shields are used. Refer to MIL-STD-889 for corrosion and definition of dissimilar metals.

RELEASED - Printed documents may be obsolete; validate prior to use.

e. Overwrap materials consisting of a sufficient amount of packaging material to form a film cushion shall be used for heavy items or items having sharp points and edges that could potentially damage or puncture primary and secondary packaging film layers.

f. All protective shields and insulating materials shall be installed over the secondary packaging film.

g. Any and all protective devices (shields) not used in conjunction with packaging films to prevent contaminant entry onto precision cleaned surfaces shall be metallic closures that conform to requirements of Section 15.3, including material and installation requirements

15.5 Dessicants

a. Desiccants used for packaging of precision cleaned components shall meet the requirements of MIL-D-3464 Type II (non-dusting). Even non-dusting desiccants may be a source of contamination for precision cleaned components; therefore, desiccants should not be used inside the inner bag or package.

b. Desiccants shall be packaged with a visual humidity indicator. Desiccant bag integrity should be verified before installation and after removal.

c. Smaller items, including fluid components that are less than 1.5 inch nominal size and items totally enclosed and sealed within inner and outer bags (made of primary and secondary packaging film materials), that have precision cleaned surfaces made of carbon steel or other materials susceptible to corrosion when in contact with moisture/water for indefinite periods of time shall be packaged with desiccants placed between the inner and outer bags (outside the inner bag and inside the outer bag).

15.6 Inert Gas Purging

a. Items where all of the following criteria apply shall be internally pressurized to 3 psig or higher pressure with an inert gas conforming to Section 12.0(b):

1. Item has precision cleaned surfaces made of carbon steel or other materials prone to corrosion when in contact with moisture/water during extended time periods.
2. Item is either placed into storage for an indefinite time period or is shipped to or from an RPT facility.
3. Item is not packaged inside inner and outer bags or with desiccant as prescribed in Section 15.5.c.
4. Item that are not IM&TE or AM&TE shall be packaged in accordance with Section 15.6.f.

RELEASED - Printed documents may be obsolete; validate prior to use.

b. Items internally pressurized shall each be equipped with no less than one gage, to provide continuous indication of internal pressure, and valves to provide a safe means to pressurize and vent (depressurize) the item.

c. Larger items, having internal volumes greater than 0.5 m^3 shall not be pressurized to pressures above 10 psig. Maximum allowed pressure for smaller items, having internal volumes no greater than 0.5 m^3, is 25 psig.

d. Prior to shipment of item or placement of item into storage, internal pressure shall be monitored for a time period of 12 hours or more to assure no detectable leakage of internal gas from the item.

e. On a case-by-case basis, items shall be pressurized in accordance with above requirements in Section 15.6.a, b, c, and d if unacceptable risk of moisture entry exists prior to installation and operational use of item, entry of air or moisture into the item will degrade its performance or operation.

f. For each IM&TE item packaged and totally enclosed within an inner bag (totally enclosed and sealed within primary packaging film), the outer bag (made of secondary packaging film) shall be purged with gaseous nitrogen or argon, conforming to requirements of Section 12.0(c) to assure an inert storage package.

15.7 Sealing

a. This section applies to cases where inner and outer bags are used to contain/enclose entire precision cleaned item(s) and where these bags are made from sheets of packaging film or are closed after precision cleaned items are placed inside the bags.

b. Material used for the inner and outer bags shall be packaging films conforming to requirements of Section 15.2 where primary packaging films are used for the inner bags and secondary packaging films are used for the outer bags.

c. Each inner and outer bag shall be made of only one film material.

d. For IM&TE and AM&TE, the bags shall be completely sealed to ensure the storage package is inert.

e. For items that are not IM&TE, the inner bag shall be completely sealed to prevent contaminant entry onto precision cleaned items and the outer bag shall be completely sealed to prevent moisture and visible contaminant entry onto the inner bag.

f. Bags shall be overwrapped and double-bagged to prevent damage during storage and handling.

g. An all-purpose impulse sealer shall be used to produce effective seals with plastic films.

RELEASED - Printed documents may be obsolete; validate prior to use.

h. If specific sealing procedures are not available, the recommendations of the manufacturer shall be followed for temperature setting and dwell time.

i. Fluorohalocarbon films, such as Aclar 22A, shall be sealed on all sides when fabricating bags.

j. Fluorohalocarbon films shall not be center folded. Center folding may generate particles since fluorohalocarbon films tend to be brittle.

k. Outer protective wrap (e.g., dimple wrap) may be applied outside the controlled area.

15.8 Detailed Requirements

15.8.1 Small Items

a. Small items that have all surfaces precision cleaned shall be packaged in accordance with Section 15.2, sealed in accordance with Section 15.7, cushioned as applicable, bagged, and sealed.

b. Threaded fittings shall be double-bagged and may be placed in a polyethylene bubble bag. Sandwich packaging may be used with identical small and like items, such as O-rings and gaskets. A sandwich package consists of heat sealing a number of identical items between two sheets of plastic film in such a manner that each item is in a separate heat-sealed compartment. Each compartment must be separable from the others by cutting without violating the integrity of the remaining compartments.

c. Each inner bag shall be placed in an outer bag of polyethylene, made of film material conforming to requirements and referenced documents in Table 4, with a certification card in accordance with Section 15.8.6.

d. The outer bag shall be sealed in accordance with Section 15.7

15.8.2 Items Internally Cleaned Only

a. Items cleaned internally only shall have all openings and other orifices leading to the internally cleaned surfaces sealed with plastic film in accordance with Section 15.2 or metallic closures in accordance with Section 15.3.

b. The plastic film shall be secured in place with tape conforming to A-A-1689.

c. The sealed fittings or other orifices may be cushioned with protective film as applicable.

RELEASED - Printed documents may be obsolete; validate prior to use.

d. Each opening or other orifice of large items sealed and wrapped with packaging film per Section 15.2 and not sealed with metallic closures per Section 15.3, shall be overwrapped with polyethylene.

e. Openings and other orifices sealed and wrapped with packaging film shall be covered with protective devices in accordance with Section 15.4.

f. Identification shall be in accordance with Section 15.8.6.

15.8.3 Items with Flange or Hub Nozzle Connections

a. Fl**a**nge and hub connections on items that have only internally cleaned surfaces shall be sealed with packaging films in accordance with Section 15.2 or with metallic closures in accordance with Section 15.3.

b. When packaging films are used, protective devices shall be used as required by and in accordance with Section 15.4.

c. Marking and identification shall be in accordance with Section15.8.6.

15.8.4 Electrical and Electronic Items

a. Electrical and electronic items that require testing after cleaning shall be packaged in an inner bag sealed in a manner that permits access to test points, such as leads and connectors, without violating the integrity of the inner bag.

b. Exposed items, such as leads and connectors, shall be cushioned as required.

c. Each inner bag shall be placed in an outer bag of polyethylene conforming to requirements and referenced documents in Table 4, sealed in accordance with Section 15.7, and marked in accordance with Section 15.8.6.

d. Tamperproof decals shall be applied to the outer bag.

15.8.5 Hose and Tube Assemblies

a. Hose and tube assemblies that have only internally cleaned surfaces shall be sealed with plastic film in accordance with Section 15.2 or with metallic closures on end openings/connections in accordance with Section 15.3.

b. When packaging films are used, protective devices shall be used as required by and in accordance with Section 15.4.

c. The plastic film shall be secured in place with tape conforming to A-A-1689.

RELEASED - Printed documents may be obsolete; validate prior to use.

d. The entire hose or tube assembly may be overwrapped with polyethylene film as applicable.

15.8.6 Identification of Cleaned Items

a. For precision cleaned items totally enclosed and sealed in bags, appropriate certification cards shall be placed between the inner and outer bags or layers (primary and secondary packaging film layers) where practicable.

b. For cases where the precision cleaned items totally enclosed and sealed in bags are too small or of a configuration that does not enable placing the certification card between inner and outer bags, the certification card shall be enclosed and sealed in a separate plastic bag or between layers of packaging film, fully sealed around the enclosed card.

c. The separate bag or sealed film layers shall be securely taped to the outside of the outer bag containing the precision cleaned item(s).

d. For items that are internally cleaned only (see Section 15.8.2), the certification card shall be enclosed and sealed within a polyethylene bag or envelope.

e. The bag or envelope shall be securely attached to the item. If one or more of the openings or orifices are closed off with attached metallic closure(s) in accordance with Section 15.3, the certification card may be placed inside a polyethylene bag that is wrapped and taped around one of the metallic closures (see Section 15.3.i).

f. Certification cards shall be serviceable and of sufficient size to contain the following information at a minimum:

    1. Part description and work authorization number (e.g., work request/task number).
    2. Manufacturer's serial number or other identification number (property or calibration control number).
    3. Cleanliness level and cleanliness inspection date.
    4. Acceptance stamps (QA/Quality Designee).

15.8.7 Packaging Removal

a. Removal of packaging film before installation of hardware into a system shall be performed such that all material is completely removed (i.e., no shreds, strips, or pieces of material will remain after packaging is removed).

b. Clean habits, where transfer/movement of contaminants to environments and hardware during processing and handling are prevented or limited to the maximum practicable extent, shall be followed.

RELEASED - Printed documents may be obsolete; validate prior to use.

c. Visible contamination on items cleaned to precision, UV, or VC levels shall be cause for rejection.

d. Visible evidence of an item damaged from transit, handling, packaging, or other causes shall be reason for rejection.

e. Cleanliness during assembly shall be maintained.

RELEASED - Printed documents may be obsolete; validate prior to use.

16. RECORDS AND FORMS

Records and forms required by this standard shall be maintained as specified.

RELEASED - Printed documents may be obsolete; validate prior to use.

Appendix A SOLVENT REQUIREMENTS

Table A–1. Trichlorotrifluoroethane.
Procurement Specification Requirements [1]

Characteristics	Requirement
Chemical purity	99.6% by wt. (min.)
Non-volatile residue	0.5 mg/200 milliliters (max.)
Chloride ion	0.3 ppm (max.)
Moisture	60 ppm (max.)
Alcohol	0.3% by wt. (max.) [2]

NOTES:

[1] Use limits apply to both new and reclaimed trichlorotrifluroethane.

[2] Test for alcohol by ferrox test or infrared spectroscopy.

Table A–2. HCFC-225G.
ASAHIKLN AK-225G [1, 2]
Procurement Specification Requirements [1]

Characteristics	Requirement
Appearance	Clear colorless liquid
Purity	99.5% (min.)
Residue	2 ppm (max.)
Acidity (as HCI)	1 ppm (max.)
Moisture	100 ppm (max.)
Isomer Ratio (%) – 225ca	<2
Isomer Ratio (%) – 225cb	>98
Chloride (CL)	<1 ppm

NOTES:

[1] Use limits apply to both new and reclaimed dichloropentafluoropropane (HCFC-225G).

[2] HCFC-225G ca is 3, 3-Dichloro-1, 1, 1, 2, 2-pentafluoropropane and HCFC-225G cb is 1, 3-Dichloro-1, 1, 2, 2, 3-pentafluoropropane solvent.

RELEASED - Printed documents may be obsolete; validate prior to use.

Table A–3. HCFC-225.
ASAHIKLN AK-225 [1, 2]
Procurement Specification Requirements [1]

Characteristics	Requirement
Appearance	Clear colorless liquid
Purity	99.5% (min.)
Residue	2 ppm (max.)
Acidity (as HCI)	1 ppm (max.)
Moisture	100 ppm (max.)
Isomer Ratio (%) – 225ca	45 ±5
Isomer Ratio (%) – 225cb	55 ±5
Chloride (CL)	<1 ppm

NOTES:

[1] Use limits apply to both new and reclaimed dichloropentafluoropropane (HCFC-225).

[2] HCFC-225ca is 3, 3-Dichloro-1, 1, 1, 2, 2-pentafluoropropane and HCFC-225cb is 1, 3-Dichloro-1, 1, 2, 2, 3-pentafluoroprone.

Table A–4. HFE-7100.
Methoxy-Nonafluorobutane [1]
Procurement Specification Requirements

Characteristics	Requirement
Appearance	Clear colorless liquid
Purity	99.5% (min.)
Residue	2 ppm (max.)
Acidity (as HCI)	1 ppm (max.)
Moisture	100 ppm (max.)
Free Fluoride	<1 ppm

NOTE:

[1] Use limits apply to both new and reclaimed methoxy-nonafluorobutane (HFE-7100).

RELEASED - Printed documents may be obsolete; validate prior to use.

Table A–5. Vertrel MCA.
Decafluoropentane (62%) and Trans-Dichloroethylene (38%) [1]
Procurement Specification Requirements [1]

Characteristics	Requirement
Appearance	Clear Colorless Liquid
Decafluoropentane (Vertrel XF)	64 ± 4 (%)
Trans 1,2-Dichloroethylene (DCE)	36 ± 4 (%)
Purity	99.5% (min.)
Residue	3 ppm (max.)
Acidity (as HCI)	1 ppm (max.)
Moisture	100 ppm (max.)

NOTE:
[1] Use limits apply to both new and reclaimed Vertrel MCA.

Table A–6. Vertrel XF.
1, 1, 1, 2, 3, 4, 4, 5, 5, 5-Decafluoropentane [1]
Procurement Specification Requirements

Characteristics	Requirement
Appearance	Clear colorless liquid
Purity	99.0% (min.)
Moisture [2]	<100 ppm
Acidity (equivalent hydrochloric acid ppm, max. by wt.) [3]	1 ppm (max.)
Free Fluoride Content [4]	<10 ppm
Nonvolatile Residue [5]	2 ppm (max)

NOTES:
[1] Use limits apply to both new and reclaimed Vertrel XF.
[2] Test for moisture per ASTM D 3401.
[3] Test for acidity per ASTM D 2989.
[4] Test for free fluoride per ASTM D 3443.
[5] Test for NVR per ASTM D 2109 or Appendix B using a minimum sample volume of 100 ml.

RELEASED - Printed documents may be obsolete; validate prior to use.

Appendix B TEST METHODS

B.1 Gravimetric NVR Analysis Method

The gravimetric NVR analysis method shall be performed as follows:

a. Filter the solvent sample through a 10-micron pore size or less filter paper or membrane, compatible with the fluids being tested. Collect the filtered solvent into a cleaned container.

b. Evaporate a portion of the solvent sample to a 10–20 ml volume using a steam bath or rotary evaporator or a thermostatically controlled hot plate. If the test solvent used is perchlorethylene (tetrachloroethylene), a silicon-based oil bath must be employed with the rotary evaporator due to the high boiling point of perchlorethylene.

c. Transfer the sample to a clean constant weight (within 0.1 mg), tared weighing container, which was previously weighed to the nearest 0.1 mg. Rinse the sample container (e.g., beaker or flask) with approximately 20 ml of clean, filtered fluid and transfer the wash fluid to the weighing container (e.g., aluminum weighing pan).

d. Continue evaporation by placing the weighing dish inside a constant-temperature oven at a maximum temperature of 110 °C. Allow the weighing dish to remain inside the oven until the fluid has just evaporated to dryness.

e. Remove the weighing dish from the oven and place in a desiccator to cool for 30 minutes. Remove the weighing container and weigh to the nearest 0.1mg.

f. Record the weight as mg/200 mL for most analyses

g. Perform a blank NVR on the filtered control solvent, and subtract the results from the NVR value obtained for the sample (f.).

h. Calculate the NVR as follows:

$$NVR = M_S - C_S$$

Where:

M_S = Measured Sample NVR concentration from f.

C_S = Control Sample (Solvent Blank NVR)

RELEASED - Printed documents may be obsolete; validate prior to use.

i. A correction (sensitivity) factor for hydrocarbons is required if HFE 7100 is used to perform a solvent flush for NVR analysis.

$$NVR = \{(M_S - C_S)(S_F)\}$$

Where:

S_F = HFE 7100 sensitivity factor (3.0) for hydrocarbons (mineral oil)

M_S = Measured sample NVR concentration (e.g., mg / 100ml or mg/ 200ml)

C_S = Control Sample (Solvent Blank NVR)

NOTE

The value of S_F is dependent upon the type of residues likely to be left on hardware following a solvent flush and may vary from operation to operation. The S_F value of 3.0 is based on mixed aliphatic hydrocarbons (mineral oil). For fluorocarbon oils, (e.g., Krytox) no sensitivity correction factor is required.

j. The requesting organization shall adjust the NVR value based on the total amount of solvent used and the surface area sampled.

k. Users may opt to analyze 100ml of the 200 ml sample to determine the gravimetric NVR. Consequently, adjust the NVR test results by applying a 2X correction factor when reporting NVR per 200ml. Also, a NVR correction (sensitivity) factor is required if HFE 7100 is used to perform a solvent flush for NVR analysis (see Appendix B-1(i).

B.2 Aqueous Ultrasonic Sampling and NVR Determination using Total Organic Carbon Analysis

This procedure defines the method for performing aqueous ultrasonic sampling and TOC NVR analysis of small parts. This method is limited to moderately sized hardware due to the sensitivity of the TOC analysis. This technique may also be used to quantify residue obtained from solvent flushes or extractions only after the solvent has been completely evaporated in the sampling pan.

NOTE

Lower frequencies have been found to be the most efficient in the removal of contamination; however, frequencies below 25 kilohertz (kHz) have been found to damage soft metals such as aluminum and silver.

B.2.1 Equipment

The equipment unique to performing this procedure is as follows:

RELEASED - Printed documents may be obsolete; validate prior to use.

a. Ultrasonic (U/S) bath, 50 to 100 watts/gallons, 25 to 27 kilohertz

b. Stainless steel parts sampling pan, volumes 1, 2, 3, and 4 liters

c. Bracket to suspend parts sampling pan in U/S bath

d. A high-temperature (880 °C) combustion TCA (total carbon analyzer) with a sensitivity of ±0.2 ppm carbon (c) (mgC/L) and direct sample injection into combustion furnace

e. Carrier gas – oxygen or air, 1.0 ppm maximum total gaseous hydrocarbon (expressed as methane)

f. Potassium hydrogen phthalate, used to prepare calibration standards

e. Syringes, 200–500 microliter capacity, gastight

B.2.2 Preliminary Steps

a. Set the U/S bath temperature at 52 ±2 °C and degas the bath for 10 minutes before use.

b. Set the TCA to syringe mode and set the optimum parameters with the furnace temperature at 880 °C. Adjust the TCA in accordance with the manufacturer's instruction.

c. Instrument calibration shall be performed daily using a 5ppm or lower hydrogen phthalate solution with DI water that meets the requirements in 7.5.1 A series of 200 micro-liter injections, five minimum shall be made until the percent relative standard deviation of the TC is less than 6 percent.

d. Clean the parts sampling pans. Conduct the sampling procedure without parts to verify the cleanliness of the pans. The TCA results should be less than 1.0 ppm (1.0 mgC/L). If the total carbon reading is greater than 1.0 ppm, check the quality of the reagent water and/or the cleanliness of the parts sampling pan.

e. Record the TCA results on the parts sampling pan as blank sample (TC_B).

B.2.3 Sampling

a. Place the parts with the surface area of 0.1 to 0.2 m^2 in a clean parts sampling pan.

b. Measure the quantity of reagent water required to cover the parts in the parts sampling pan.

c. Cover the parts sampling pan with foil and place it on a bracket in the U/S bath.

RELEASED - Printed documents may be obsolete; validate prior to use.

NOTE

Reagent-water-to-parts-surface-area ratio shall not exceed 1000 mL/0.1 m^2; the ideal ratio is 500 mL/0.1 m^2.

d. Set the level of water in the U/S bath so it is above the water level in the parts sampling pan.

e. Sonicate parts in the U/S bath for 10 minutes. Perform the three following steps (f, g, and h) as soon as possible within the maximum time limit of 120 minutes.

f. Remove the parts sampling pan from the U/S bath and remove the cover. Swirl the parts sampling pan to mix the water.

g. Draw a 200-microliter sample of water from the parts sampling pan with a syringe.

h. Inject the 200-microliter sample of water into the TCA following the instrument operating instructions and record the TCA results.

i. Record the sample total carbon reading (TC_S).

B.2.4 Calculation

a. Equivalent Nonvolatile Residue (Aqueous Ultrasonic Sampling)

$$NVR = \{(TC_S - TC_B)\ V_W\} / \{(S_F)\ A\}$$

Where:

NVR = Equivalent NVR (mg/m^2 or mg/0.1 m^2)

TC_S = Total carbon value of sample (mgC/L or ppm)

TC_B = Total carbon value of blank (mgC/L or ppm)

V_W = Volume of water (L)

A = Surface area of parts (m^2)

S_F = Sensitivity factor (mgC/mg contaminant) empirical constant derived from test of known contaminants

b. Sensitivity Factor (Aqueous Ultrasonic Sampling)

RELEASED - Printed documents may be obsolete; validate prior to use.

$$S_F = TC/S$$

Where:

S_F = Sensitivity factor (mgC/mg of contaminant)

TC = Average total carbon value of the sample (mgC/L)

S = Contaminant solution concentration (mg/L)

Many contaminants are not soluble in water. Heating the water and the ultrasonic agitation may be required to adequately emulsify the contaminant.

NOTE

Some contaminants are very difficult to emulsify directly. Some success has been achieved by applying a known amount of contaminant to a small, thin, lightweight coupon, such as shim stock or polytetrafluoroethylene (PTFE). Then the coupon is ultrasonically agitated in a known amount of heated water. The coupon is dried and reweighed. The difference in coupon weight is the amount of contaminant extracted into the water. The water sample is analyzed for TC, and an SF can then be calculated based on the known contaminant concentration and the measured TC.

B.3 Infrared Spectrometric Transmission Method for Nonvolatile Residue Analysis

B.3.1 General

This method involves evaporating an aliquot of solvent (AK225g, HFE 7100, etc.), or the entire sample volume and picking up the residue in tetrachloroethylene and analyzing the solution with an infrared spectrometer

B.3.2 Equipment

a. Fourier Transform Infrared (FTIR) Spectrometer

b. Quartz cell, 20mm pathlength (10 mm optional)

c. Pharmaceutical grade mineral oil

d. Tetrachloroethylene, spectrometric grade

e. Temperature controlled oven (optional)

B.3.3 Calibration

a. Before using this method, the FTIR spectrometer shall be initially calibrated.

RELEASED - Printed documents may be obsolete; validate prior to use.

b. Follow manufacturer's instructions for internal optical alignment if required, and optimal energy through put. Instrument parameters (number of scans, wave number resolution, gain ranging radius, etc.) should be adjusted as needed to optimize results.

c. Using tetrachloroethylene in a 20 mm quartz cell, perform a background (single beam) scan daily or before use between 3200 cm^{-1} and 2600 cm^{-1}. The background spectrum will be used to develop absorbance spectra for the calibration standards in (d, e and f below).

d. For a 50 ml sample aliquot, calibrate the FTIR spectrometer by preparing mineral oil standards in tetrachlorethylene.

e. A minimum of five calibration points shall be obtained.

f. The final calibration concentrations shall range from 0.01 mg/ml to an upper limit of 0.36 mg/ml. The 0.02mg/ml mineral oil standard in tetrachloroethylene represents 0.5 mg of NVR in a 200ml sample brought down to dryness and reconstituted with 7 ml of terachloroethylene.

g. Progressing from the lowest calibration standard to the highest standard, scan the various hydrocarbon blends in the 3200 cm^{-1} and 2600 cm^{-1} range using a 20 mm quartz cell. If a representative aliquot or entire of the sample volume is analyzed, prepare equivalent calibration standards based on the total amount of solvent used (e.g., 50 ml of a 200 ml sample with an NVR of 1 mg/200 ml = 0.25 mgs. of NVR ml 0.25 mgs. reconstituted with 7 ml of tetrachloroethylene is 0.036 mg/ml. Therefore, an equivalent NVR (hydrocarbon) standard of 0.036 mg/ml would represent 1 mg/200 ml from a 50 ml aliquot.The quartz cell should be flushed twice with tetrachloroethylene and a minimum of two times using a standard of the next highest concentration level when changing standards.

h. Use the spectra from Sections D, E and F to compute the least squares regression calibration coefficients. The correlation coefficient for the linear regression or quadratic model should be 0.990 or better. Either peak intensity or area can be modeled. The calibration curve cannot have a y intercept of zero, and it should not be forced to go through zero.

B.3.4 Infrared Analysis Procedure

a. Perform a background scan daily with tetrachloroethylene or before use between 3200 cm^{-1} and 2600 cm^{-1} . The single beam background spectra will be used to develop absorbance spectra for analyzing samples.

b. Following the initial calibration (Section B.2.3) and the background scan (a), analyze check standards daily or before sample analysis. The check standards shall represent

RELEASED - Printed documents may be obsolete; validate prior to use.

1mg/200 ml and 4 mg/200ml. The check standards (mineral oil in tetrachloroethylene) should read within ±10%.

c. Filter the solvent sample (e.g., AK225g, HFE 7100, etc.) through a 10 micron pore size or less filter paper or membrane, compatible with the fluids being tested. Collect the filtered solvent into a cleaned container.

d. Evaporate the sample or a representative aliquot of the solvent sample to near dryness (3 to 5 ml) using a steam bath or rotary evaporator or a thermostatically controlled hot plate. Remove the beaker before dryness and place in an oven at a maximum temperature 110 °C or allow it to dry or with forced air (draft from the fume hood) flowing over the sample or with a nitrogen purge.

e. Allow the beaker or flask to cool and add 7 mls of tetrachloroethylene to the residue.

f. Briefly swirl the solvent over the residue and transfer the solution to a 20 mm quartz cell. Use care during transfer to avoid loss of the sample due to spilling or overfilling of the cell.

g. Record a sample infrared absorption spectrum between 3200 to 2600 cm^{-1} using the same cell pathlength that was used to develop the calibration curve.

h. Determine the amount of NVR (mgs. of hydrocarbon) in the sample by using the least squares regression calibration curve (B.2.3). If the sample concentration is greater than the highest calibration standard, a dilution of the sample with tetrachloroethylene shall be made and the appropriate dilution factor applied.

$$NVR = (M_S)\ (Vs)$$

Where:

M_S = FTIR measured sample NVR concentration (e.g., mg/200 ml)

Vs = Tetrachloroethylene volume used to reconstitute the sample residue (e.g., 7 ml)

NVR = mg of NVR (hydrocarbon)

i. If a blank sample is submitted, perform a blank NVR on the filtered control solvent (steps c through h.) and subtract the results from the NVR value obtained for the sample (h).

j. A hydrocarbon correction (sensitivity) factor is required if HFE 7100 is used to perform a solvent flush for NVR analysis (Appendix B-1(i). If applicable, adjust the NVR value based on the sample volume analyzed, and the concentration units reported (mgs per 200 ml sample or mgs per 100 ml sample volume).

RELEASED - Printed documents may be obsolete; validate prior to use.

k. The requesting organization shall adjust the NVR value as required, based on the total amount of solvent used, control solvent (background NVR), and the surface area sampled.

B.4 Microscopical Particle Population Analysis

B.4.1 Scope

This analytical method covers the size distribution and quantity of particulate matter contamination removed from cleaned items and isolated on a membrane filter. This test method does not provide for sizing particles smaller than 5 µm.

B.4.2 Analysis

a. Assemble a precision-cleaned filtration apparatus.

b. Using clean forceps with nonserrated tips, place a filter membrane (47-mm diameter with 0.4-µm to 1.0-µm pores) in position in the filter holder.

c. The filter membrane shall be compatible with the test fluid. Before insertion, the filter membrane may be rinsed with filtered test fluid to remove any adherent contamination.

d. Fill the filter funnel approximately three-fourths full of test fluid and turn on the vacuum pump.

e. Add the remaining test fluid to the filter funnel at a rate necessary to maintain the funnel more than half full until all of the test fluid has been added. Do not allow the test fluid to pour directly onto the filter membrane after filtration has started.

f. When filtration is completed, remove the filter membrane from the holder and place it in a disposable petri dish or equivalent until the particles are counted.

g. Retain the filtrate for analysis of the NVR in accordance with appendix 0(a) and 0(c).

h. Place the filter membrane under the microscope.

i. Direct a high-intensity light source of 5000 to 6000 candelas (cd) onto the filter membrane from an oblique position to obtain maximum definition for sizing and counting. High-intensity illumination is a critical requirement.

j. Use a magnification of approximately 40 to 50 power for counting particles for conformance to level 150 and greater and approximately 100 power for level 100 and less.

RELEASED - Printed documents may be obsolete; validate prior to use.

k. Count the particles in accordance with the method of ASTM F312 or SAE ARP 598 except when the total number of particles of a given particle size range is to be between 1 and 154. Then the number of particles over the entire effective filtering area of the membrane shall be counted.

RELEASED - Printed documents may be obsolete; validate prior to use.

Appendix C CLEANLINESS VERIFICATION USING THE TEST SPOOL METHOD

C.1 Scope

This appendix provides guidance relating to performing cleanliness verification using the test spool sampling method. In a complex or large piping system, it may be difficult to determine how effective a field cleaning operation has been. A short flanged length of pipe (e.g., spool piece) at a location where the cleaning is likely to be least effective can be used for cleanliness verification. Multiple spool pieces should be used for long pipe sections or with complex configurations (e.g., branched sections). The spool piece can be removed from the system and analyzed for NVR or particulate verification.

C.2 Equipment

a. The test spool shall be of the same material and same diameter as the system being cleaned.

b. Double isolation valves shall be installed at each end of the test spool before installation to allow removal without compromising the system's cleanliness integrity.

c. The isolation valves shall be compatible with the system being cleaned and sized appropriately to prevent any flow restriction of the process fluids.

d. The test spool shall have an interior surface area equal to or greater than $0.5m^2$.

C.3 Operation

a. The test spool shall be cleaned to the appropriate cleanliness level per this standard before use.

b. The test spool shall be installed at the systems outlet port or at low points in the line before beginning the operation.

c. The test spool is to remain in place throughout the entire cleaning process and will be routed to the laboratory for analysis.

d. Immediate surrounding surfaces (test spool connection points) shall be flushed/wiped with validation fluid before removing the test spool to remove oils/contaminates.

e. All immediate surrounding surfaces (test spool connection points) shall be purge dried with filtered GN2 until visibly dry.

f. Isolation valves shall be closed; the test spool shall be removed.

RELEASED - Printed documents may be obsolete; validate prior to use.

g. All open ports (system and test spool) shall be immediately sealed from outside contamination. When sealing open ports, the primary barrier must be certified to meet system cleanliness requirements.

h. The test spool shall be routed to the laboratory for analysis.

C.4 Analysis Method of Test Spool

a. Sufficient quantity of validation fluid to perform the analysis shall be obtained.

b. The isolation valve at one end of the test spool shall be opened. 200 ml per 0.1 m^2 of the test solvent from Section 8 shall be poured through the open port into the test spool.

c. The isolation valve shall be closed and the test spool shall be agitated to ensure validation fluid is introduced evenly and has wet all surface areas.

d. The sample shall be decanted into a sample container which shall be submitted to site lab and analyzed for acceptable NVR and/or particulate in accordance with this standard.

RELEASED - Printed documents may be obsolete; validate prior to use.

Appendix D METHOD V, NVR AND PARTICLE DETERMINATION FOR IN SERVICE SYSTEMS

D.1 Scope

a. This appendix provides a gas flow test method to evaluate a systems capability to deliver fluid that meets the specified cleanliness requirements (for in-service systems). This method is intended to evaluate a field system which is suspected to have been contaminated in use or during operational testing. This method should not be used to certify a new system cleaned in the field.

b. Gas samples shall be drawn from a flowing gas stream (not from a dead space in the system).

D.2 Particle Determination

The gas flow test method for monitoring particle population and NVR remaining on critical surfaces shall be performed as follows.

a. Sampling of the component, subsystem, or system shall be performed at the specified point.

b. The sampling gas shall be drawn through a 47mm 1-μm or smaller filter membrane.

c. Nitrogen or helium that complies with the requirements in Table 4 shall be used as the sample gas.

d. Particle level determination shall be made using a minimum 4000 liter (142 scf) sample.

e. The minimum gas flow rate through the sampler while accumulating. The samples shall be 990 liters/min (35 scfm).

f. A positive flow rate of at least 14 liters/minute (0.5 scfm) shall be maintained during installation and removal of the sampler.

g. Two consecutive successive samples taken 8 to 48 hours apart, shall demonstrate compliance with cleanliness requirements of this standard.

h. The particles on the filter membrane shall be counted using procedures described in this standard

RELEASED - Printed documents may be obsolete; validate prior to use.

D.3 NVR Determination

An NVR sample at the user interface point can be obtained by passing the sampling gas through a precision cleaned gas sampling device as shown in Figure D–1. Volume surface area requirements are met when sampling collection per Table D–1 is followed.

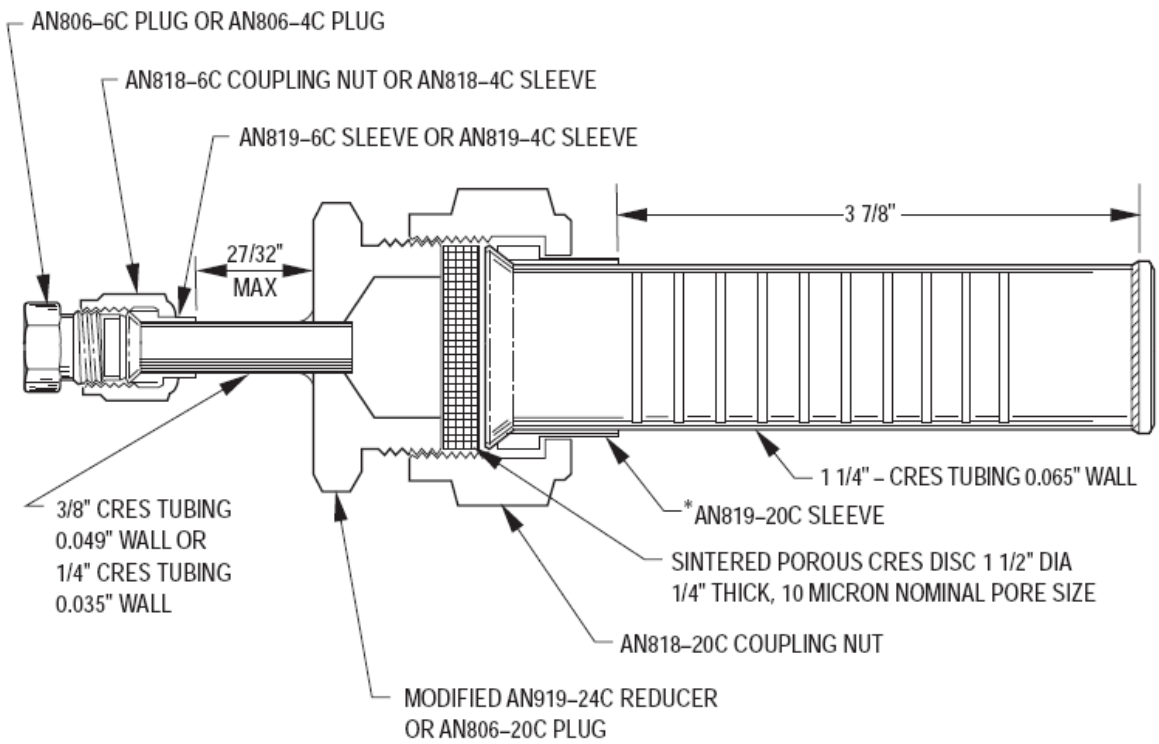

Figure D–1. Gas Sampler for NVR Residue.

Table D–1. Sampling Time.

Nitrogen [1]	
Pressure Drop (psi) [2]	Sampling time
200–499	12 min
> 500	5 min
Helium [3]	
Pressure Drop (psi) [2]	Sampling time
200–299	10 min
> 500	4 min

NOTE:

[1] N_2 is used as the sampling gas for oxidizer and nitrogen systems

[2] Pressure drop is defined as the pressure reading on the gauge at the sampling location when the sampler is connected and the valve is open.

[3] He is used as the sampling gas for hydrogen, helium and fuel systems

RELEASED - Printed documents may be obsolete; validate prior to use.

a. Do not add pressure line extensions between sampling port and the system being tested. Open the system valve to achieve a pressure drop reading above 500 psi for 1 minute. If a pressure drop of 500 psi cannot be obtained, refer to Table D–1 for the required sampling time. No sampling shall be conducted below a pressure drop of 200 psi.

b. Remove the sampler from the sample port and reinstall the AN plug in the inlet of the sampler and insert sampler into Teflon or Aclar bag that complies with Section15. Pass the sampling gas through the sampling device under the conditions listed in Table D–1.

c. Disassemble the NVR sampler and place the sintered stainless steel disc in Gooch crucible or a 47mm diameter filter holder/filtering apparatus.

d. Flush 200ml of a halogenated solvent (referenced in Section 7.3) through the sintered disc. Repeat twice using the same solvent.

e. Determine the NVR using the gravimetric or infrared procedure described in Appendix B.

f. The extraction and analysis shall be repeated until results are less than 0.3 mg or the results of successive analyses agree within 0.2 mgs.

g. Two consecutive samples taken 8 to 48 hrs apart, shall demonstrate compliance with the NVR requirements of this standard.

RELEASED - Printed documents may be obsolete; validate prior to use.

Appendix E METHOD VII, WIPE SAMPLES FROM REPRESENTATIVE CRITICAL SURFACES

E.1 Scope

This method consists of wiping the critical surfaces of the hardware with a cloth type wipe and analyzing the contamination picked up by the wipe. This method is used on hardware when the solvent flush method is not practical.

E.2 Preparation of Sampling Wipes

a. Lint-free nylon or polyester wipes varying from 6 to 12 inches square. The ends of the wipe shall be double rolled (hemmed) or heat sealed

b. Wipes shall be cleaned until each wipe has an NVR or hydrocarbon content less than 0.3 mgs.

c. Each wipe will be placed in a cleaned aluminum foil and placed in an outer Teflon bag

E.3 Wipe Method

a. A clean pair of solvent resistant gloves (or a clean Teflon bag placed over a glove) shall be worn while handling the wipe

b. Remove the wipe from the protective packaging and soak the wipe with a halogenated solvent per Section 7.3

c. The critical surfaces shall be wiped while turning the wipe often to expose a clean area.

d. One to three square feet shall be sampled per wipe. Caution is necessary on cast items and metals such as aluminum not to rub hard enough to generate lint particles or to degrade treated surfaces.

e. The wipe shall then be rewrapped in the aluminum foil and placed in an outer inert bag (e.g., Teflon bag).

f. The package shall be labeled including the area sampled and the solvent used during sampling

g. The wipe shall be extracted using 200ml of halogenated solvent per Section7.3. Extraction may be performed using Soxhlet extraction (minimum of six extractions) or a soak leach method using agitation for a min. of 30 minutes.

RELEASED - Printed documents may be obsolete; validate prior to use.

h. Determine the NVR using the gravimetric or infrared procedure described in Appendix B.

i. The extraction and analysis shall be repeated until results are less than 0.3 mg or the results of successive analyses agree within 0.2 mgs.

RELEASED - Printed documents may be obsolete; validate prior to use.

Appendix F THERMAL VACUUM DRYING TIME (HOURS)

VACUUM OVEN PRESSURE		TEMPERATURE VS. HOURS OF DRYING TIME				
psia	**torr**	**43 °C (110 °F)**	**54 °C (130 °F)**	**65 °C (150 °F)**	**76 °C (170 °F)**	**87 °C (190 °F)**
2.9	150	-	-	-	0.9	0.75
2.4	125	-	-	1.3	0.8	0.75
1.9	100	-	4.8	1.2	0.75	0.75
1.4	75	-	2.0	0.8	0.75	0.75
0.93	50	3.4	1.1	0.75	0.75	0.75
0.44	25	0.9	0.75	0.75	0.75	0.75
0.29	15	0.75	0.75	0.75	0.75	0.75

NOTES:

Time tolerance of ±5 mins

Pressure tolerance ±20 torr

Allowed temperature tolerance of ±3 ºC (±5 ºF)

When the parts have reached the desired temperature, a vacuum shall be drawn on the parts and maintained for the period specified. Once the parts have been dehydrated, the heat should be discontinued and the oven slowly back filled with the test gas.

RELEASED - Printed documents may be obsolete; validate prior to use.

Appendix G CROSSOVER CHART, *FOR SSC USE ONLY*

Old SSC Clean Std. Rev B vs New RPT Common Clean Standard

Rev 1

"Crossover Chart" (Rev 1: Deleted "" note; added Note 2 below)*

Old SSC SSTD-8070-0089-FLIUDS Rev B Clean Levels			New RPT STD-8070-0001 Surface Cleanliness Standard Clean Levels		
Old Levels	*Particle Size & Range*	*Maximum Number of Particles per 0.1m²*	*New Levels*	*Particle Size & Range*	*Maximum Number of Particles per 0.1m²*
Level 1	175 to 700 µ 700 to 2500µ > 2500 µ	5 1 0	Level 1000A	<500 500 to 750 >750 to 1000 >1000	Unlimited: No Silting 34 5 0
Level 1x	175 to 800 µ > 800 µ	5 0	Level 750A	<250 250 to 500 >500 to 750 >750	Unlimited: No Silting 205 9 0
Level 1xx	175 to 400 µ > 400 µ	5 0	Level 400A	<100 100 to 250 >250 to 400 >400	Unlimited: No Silting 155 5 0
Level 1xxx	> 100 >50 to < 100 Other range sizes	0 1	Level 100A	<25 25 to 50 >50 to 100 >100	Unlimited: No Silting 68 11 0
Level 2	No particle counts	N/A	Level VC	No Particle counts	N/A
Level 2A①	No particle counts	N/A	UV – NDP** (no particle counts - visible moisture is not permitted)		
Level 2x Level 3x①	175 to 400 µ > 400 µ	5 0	Level 400 Level 400 NDP**	<100 100 to 250 >250 to 400 >400	Unlimited: No Silting 155 5 0
Level 2xx Level 3xx①	< 25 µ 25 to 50 µ 50 to 100µ > 100 µ	No silting 68 5 0	Level 100 Level 100 NDP**	<25 25 to 50 >50 to 100 >100	Unlimited: No Silting 68 11 0
Level 3	No particle counts	N/A	VC –NDP** (the presence of visible moisture is not permitted		
Level 4	< 10 µ 10 to 25 µ 25 to 50 µ 50 to 100µ > 100 µ	No Silting 2150 530 60 10	Level 100	<25 25 to 50 >50 to 100 >100	Unlimited: No Silting 68 11 0

*** NDP – No Dew Point Required.*

① Levels 3x and 3xx did not exist in 0089-Fluids, Rev B. For 2A, 3x and 3xx, a gas sample for dew point and moisture is not required when the critical surface is normally open to the atmosphere (e.g., dump or vent lines) or the critical surfaces would come in contact with moisture during normal system operations (e.g., A3 Chemical Steam Generators). The presence of visible moisture is not permitted for cleanliness level VC or for any precision cleanliness level.

Note 1: Items in work in the FCPF at the time of release of new standard shall be processed under the old standard. Also, all items cleaned per the old standard are acceptable for use as is.

Note 2: Use NVR Level "E" (NVR maximum = 5.0mg/0.1 m²) for tanks > 0.5m² surface area that have an NVR requirement.

RELEASED - Printed documents may be obsolete; validate prior to use.

SSTD-8070-0126 Rev. A
January 2009

National Aeronautics and
Space Administration

John C. Stennis Space Center
Stennis Space Center, MS 39529-6000

JOHN C. STENNIS SPACE CENTER

TUBING SYSTEMS FOR FACILITY SYSTEMS, SPECIAL TEST EQUIPMENT, AND AEROSPACE HARDWARE

Original signed by

Randall R. Canady_____ 01/23/09
NASA SSC Center Operations Date
Design & Construction Project Management
Division

Bartt J. Hebert_____ 01/28/09
NASA SSC Engineering & Test Directorate Date

Issued by

Issued CEF_____ 01/28/09
Date

RELEASED - Printed documents may be obsolete; validate prior to use.

Document History Log

Revision	Date	Originators/ Phone	Description
Basic	11/06/06	Bill St. Cyr 8-1134 Larry de Quay 8-1956	Initial Release; supersedes SSC STD 47-220. New document number and format per SPR 1400.1, *John C. Stennis Space Center Document Preparation, Numbering, and Management Guidelines and Standards*. Added/specified sections per SPR 1400.1.
Basic - History (from SSC STD 47-220 to current standard)	06/20/07	Larry de Quay 8-1956	Section 2.0: state allowed tubing, tube fitting types, and end-connections. Section 3.0: Add ASTM and SAE tubing specifications; add SAE specifications for tube and tube fittings and for commonly used parts. Section 4.0: add tables 1A and 1B. Section 4.1: add references to form SSC-716, SSTD-8070-0007-CONFIG, and SOI-8080-0016 for cases where tubing other than S/S tubing per standard MIL, ASTM, and SAE specifications (listed in table 2A) are used. Account for tube wall thickness and O.D. tolerances in MAWPs of tubing which results in **13 to 22% decrease in MAWPs from those in Standard 47-220**. Add ASTM and SAE tubing specifications to list of allowed specifications for purchased or acquired tubing and add selected restrictions regarding the use of tubing made to MIL tubing specifications (which are now "inactive for new design"). Add pressure ratings/limits for flared tube end and NPT connections on table 2A with MAWP of tubing. Add tables separately showing pressure ratings of tube-fitting-to-boss connections with different seal types and for male straight thread ends of differing lengths. Add table to show required thread engagement lengths for NPT connections. Add table to show options and requirements for increased NPT connection pressure ratings where needed. Section 4.2: add/clarify restrictions regarding tube fittings listed in SAE AIR310, where 1) flareless, socket weld, hose end, beam seal, and swivel type fittings are not allowed; 2) titanium fittings are not allowed in oxidizer or oxidizer rated systems; 3)

			400 psig pressure limit applies to aluminum fittings in or rated for oxygen service. Addition of drawings in referenced Appendix B to show configuration, part specifications and selected assembly information and requirements of fitting-to-boss connections with seals and seal retainers. State additional restrictions and allowances regarding non-metallic boss connection seal materials used or rated for oxidizer and cryogenic services. State allowed metallic materials for spring energized seals used in boss connections. Add requirements for disassembly and assembly of NPT connectors, including sealing of these connections and removal of sealing material from disassembled connectors. Increase allowed maximum allowed operating pressure of flareless double-ferrule (Swagelok ® or equivalent) type tubing and tube fittings from 1000 to 3000 psig for sizes of one inch and smaller and to 1500 psig for larger sizes, without CCB approval. Expand list of allowable tube fittings with double-ferrule flareless end connections beyond what was listed in Standard 47-220. Add table 5 to show required tube wall thicknesses of flareless tubing. Section 4.3: add tube size and I.D. data for 10, 30, 40, and 60 ksig rated coned-and-threaded tubing. Section 4.4: add reference to Appendix D to show geometric dimensions, tolerances, and requirements for coned-and-threaded type tubing and tube fitting end connections; add statement that 10 and 20 ksig rated tube fittings are not interchangeable with those rated at higher pressures. Section 4.5: new section added to state requirements for welding and weldment inspection, including the required pressure rating reduction when tubing and tube fittings made of "cold worked" or hardened stainless steel are welded.
A	07/16/07	Bill St. Cyr 8-1134 Larry de Quay 8-1956	Added Rev. Basic History to Document History Log to identify changes between cancelled Standard 47-220 and Rev Basic of this standard. Added hyperlinks. Section 2.0: add statement about government's right to inspect any and all aspects of work and processes used to produce, clean, test, inspect, and package tubing, tube fittings, and associated hardware.

			Section 3.0: add "and Applicable" to title; add SSC Standard 79-002, SSTD 8070-0089-FLUIDS, SAE AMS 5557, SPR 1440.1, SSC form 517, and SSC form 716. Section 4.0: add cleanliness, packaging, and storage requirements; new section 4.7 referenced (prior sections 4.7 and 4.8 renumbered to 4.8 and 4.9 respectively); add requirement for off-site vendors to provide Certificate of Conformance for all provided products and services. Sections 4.1 and 4.3: add quantified and measurable surface finish requirements for tubing, based on those in previously used MIL tubing specifications for flared type tubing and based on manufacturer specifications for coned-and-threaded tubing. Section 4.7: new section added to mandate requirements to assure removal of gross contamination or blockage in flow passages inside tubing prior to acceptance and precision cleaning processes at SSC; prevent recontamination of stored tubing; define allowed methods to inspect tubing for gross contamination or blockage; and reference SSC Standard 79-002 for test gas purity for leak tests performed after precision cleaning. Section 4.8: section number was 4.7 in Rev. Basic; revise wording to allow replacement of crush washers after proof pressure tests. Section 4.9: section number was 4.8 in Rev. Basic; add requirement for test gas to conform to SSC Standard 79-002 for leak tests of precision cleaned systems, this test gas requirement does not apply to commercially clean (Cleanliness Level 3) systems. Section 5: added section. Appendix A: added OSMA to list.

RELEASED - Printed documents may be obsolete; validate prior to use.

Table of Contents

1.0 PURPOSE 6

2.0 APPLICABILITY 6

3.0 REFERENCED AND APPLICABLE DOCUMENTS 7

4.0 REQUIREMENTS 10

4.1 Tubing for Fluid Pressure Less Than 10,000 psig 12
4.2 Fittings for Fluid Pressures Less Than 10,000 psig 20
4.2.1 Flared Tube Fittings 20
4.2.2 Seals Used for Boss Connections 21
4.2.3 NPT Connections on Tube Fittings 22
4.2.4 SWAGELOK® Flareless Type Tube Fittings 23
4.3 Tubing for Fluid Pressure of 10,000 psig and Higher 24
4.4 Coned and (Left Hand) Threaded Tube Fittings 26
4.5 Welded Tube Connections 26
4.6 Pipe Runs 27
4.7 Cleanliness, Packaging, and Storage Requirements 27
4.8 Proof Pressure Test Requirements 28
4.9 System Leak Test Requirements 29

5.0 RECORDS AND FORMS 30

Appendix A - Acronyms, Abbreviations, and Definitions 31

Appendix B - Flared Tube and Straight Thread Boss Connections 33

Appendix C - Approved Double Ferrule Flareless Type (Swaglok®) Tube Fittings 38

Appendix D - Coned and Left Hand Threaded Tube & Tube Fittings 63

Appendix E - Coned and Left Hand Threaded Tube and Tube Fitting Manufacturers 66

RELEASED - Printed documents may be obsolete; validate prior to use.

1.0 PURPOSE

This standard provides the design requirements and operating limits for tubing and tube fittings at Stennis Space Center (SSC) for facility and special test equipment (STE). This standard may be used for aerospace hardware tubing systems where deemed appropriate. These provisions are intended to assure system reliability, safety, and cost effective interchangeability between tube system hardware and components.

2.0 APPLICABILITY

This standard covers all facility and STE tubing systems erected/assembled with the following:

a. tubing with 37° flared ends;
b. tubing with flareless ends connected to Swagelok® type flareless tube fitting end connections;
c. tubing with coned-and- (left hand) threaded ends;
d. tube fittings with 37° flared, Swagelok® type flareless, NPT, and coned-and- (left hand) threaded end connections;
e. fittings with SAE (formerly AN/MS) straight internal (female) thread patterned boss connections; and,
f. fittings with SAE (formerly AN/MS) straight thread external (male) thread patterned end connections that connect to boss connections stated in e. above.

Tube fittings that have end connections other than those listed above are not governed by and are not permitted under this standard.

Pressure and temperature ratings are specified for tubes with outside diameters between 0.250" (6.35 mm) and 2.00" (50.8 mm) with wall thicknesses of 0.028" (0.71 mm) and over. Other diameters and wall thicknesses may be used provided they meet the minimum requirements of ANSI/ASME B31.3.

Piping supplied per Nominal Pipe Size (NPS) (e.g., 8" Schedule 5S, 2" Schedule 40, etc.) is not governed by this standard. However, pipe that is threaded and connected to NPT fitting connections may reduce the pressure rating of the connection below those stated in this standard; details are provided in section 4.2.

Freon®, Heating, Ventilating and Air Conditioning (HVAC), and low pressure (less that 150-psig) water tubing systems are not governed by this standard. Facility compressed air systems operating at 150 psig or less and vacuum systems are not governed by this standard. Refer to

International Association of Plumbing and Mechanical Officials (IAPMO), Uniform Plumbing Code (UPC), American Society of Heating, Refrigeration, and Air Conditioning Engineers (ASHRAE) standards, and applicable CEF-issued SSC piping system standards and specifications.

Existing designs are not required to comply with this standard except that any modifications or changes to the existing designs shall meet the minimum requirements of this standard.

The government reserves the right to witness or inspect any aspect of the fabrication, cleaning, inspection, testing, and packaging of the tubing, tube fittings, and other related products and services governed by this standard.

3.0 REFERENCED AND APPLICABLE DOCUMENTS

49 CFR 195, *Code of Federal Regulations, Title 49, Part 195, Transportation of Hazardous Liquids by Pipeline*

ANSI/AIAA G-095-2004, *Guide to Safety of Hydrogen and Hydrogen Systems*

ANSI/ASME B1.20.1, *Pipe Threads, General Purpose, (Inch)*

ANSI/ASME B31.3, *Process Piping*

ANSI/ASME *Boiler & Pressure Vessel Code*, Sections V and VIII

ASME B46.1, *Surface Texture (Surface Roughness, Waviness, and Lay)*

ASTM A213/A213M, *Standard Specification for Seamless Ferritic and Austenitic Alloy-Steel Boiler, Superheater, and Heat-Exchanger Tubes*

ASTM A269, *Standard Specification for Seamless and Welded Austenitic Stainless Steel Tubing for General Service*

ASTM A632, *Standard Specification for Seamless and Welded Austenitic Stainless Steel Tubing (Small Diameter) for General Service*

MIL-T-8504, *Tubing, Steel, Corrosion-Resistant (304), Aerospace Vehicle Hydraulic Systems, Annealed, Seamless and Welded*

MIL-T-8808, *Tubing, Steel, Corrosion-Resistant (18-8 Stabilized) Aircraft Hydraulic Quality*

RELEASED - Printed documents may be obsolete; validate prior to use.

MS28777, *Washer, Flat, Aircraft Hydraulic Backup* (Inactive for New Design)

MSS SP-6, *Standard Finishes for Contact Faces of Pipe Flanges and Connecting-End Flanges of Valves and Fittings*

NASA/MSFC-STD-506, *Standard Materials and Processes Control*

NASA-STD-6001, *Flammability, Odor, Offgassing, and Compatibility Requirements and Test Procedures for Materials in Environments That Support Combustion*

SAE AIR310, *Fittings, Catalog of Flared, Flareless, Pipe Threaded, Port, Hose, and Other Type Tube Standard Connectors*

SAE AMS 5556, *Steel, Corrosion and Heat Resistant, Seamless or Welded Hydraulic Tubing, 18Cr – 11Ni – 0.07 Cb (SAE 30347), Solution Heat Treated* (UNS S34700)

SAE AMS 5557, *Steel, Corrosion and Heat-Resistant, Seamless or Welded Hydraulic Tubing 18.5CR - 10.5NI - 0.40TI (SAE 30321) Solution Heat Treated - UNS S32100*

SAE AMS 5566, *Steel, Corrosion Resistant, Seamless or Welded Hydraulic Tubing, 19Cr – 10Ni (SAE 30304), High Pressure, Cold Drawn* (UNS S30400)

SAE AMS 5567, *Steel, Corrosion Resistant, Seamless or Welded Hydraulic Tubing, 19Cr – 10Ni (SAE 30304) Solution Heat Treated* (UNS S30400)

SAE AMS-T-6845, *Tubing, Steel, Corrosion-Resistant (S30400), Aerospace Vehicle Hydraulic System 1/8 Hard Condition*

SAE AS 758, *Fittings – Installation in Straight Threaded Boss*

SAE AS 930, *Fitting End, Straight Thread, Boss Connection, Design Standard*

SAE AS 1098, *Fitting End, Flared Tube, for Seal Ring, Standard Dimensions for, Design Standard* (Formerly KC105)

SAE AS 1099, *Fitting End, Bulkhead Flared Tube, for Seal Ring, Standard Dimensions for, Design Standard* (Formerly KC104)

SAE AS 1941, *Fitting End, Straight Thread, High Pressure, Boss Connection, Design Standard*

SAE AS 4320, *Fitting End, Straight Thread, Standard Dimensions for, Design Standard*

SAE AS 4330, *Tubing, Flared, Standard Dimensions for, Design Standard- FSC 4730* (Formerly MS33584)

SAE AS 4395, *Fitting End, Flared Tube Connection, Design Standard* (Formerly MS24385 and MS33656)

SAE AS 4396, *Fitting End, Bulkhead, Flared Tube Connection, Design Standard* (Formerly MS24386 and MS33657)

SAE AS 4841, *Fittings, 37° Flared, Fluid Connection* (Formerly MIL-F-5509 in part)

SAE AS 4842, *Fittings and Bosses, Pipe Threaded, Fluid Connection* (Formerly MIL-F-5509 in part)

SAE AS 4842/1, *Fittings, 37° Flared to Pipe Threaded, Fluid Connection*

SAE AS 4842/2, *Fittings, Flareless to Pipe Threaded, Fluid Connection*

SAE AS 4875, *Fittings, Straight Threaded Boss or Flanged, Fluid Connection* (Formerly MIL-F-5509 in part)

SAE AS 4875/1, *Fittings, Straight Thread Boss or Flanged to 37° Flared, Fluid Connection*

SAE AS 5179, *Nut, Fitting, Port* (Formerly AN6289)

SAE AS 5201, *Fitting End, External Taper Pipe Thread, Design Standard* (Formerly AND100775 and MS33677)

SAE AS 5202, *Port or Fitting End, Internal Straight Thread, Design Standard* (Formerly MS33649C and SAE AS33649)

SAE AS 8791, *(R) Hydraulic and Pneumatic Retainers (Back-Up Rings), Polytetrafluoroethylene (PTFE) Resin* (Replaces MS28774)

SAE AS 28778, *Packing, Preformed, Straight Thread Tube Fitting Boss - FSC 5331* (Replaced MS28778)

SAE AS 33583, *Tubing End Double Flare, Standard Dimensions for - FSC 4730* (Formerly MS33583)

SAE AS 71051, *Pipe Threads, Taper, Aeronautical National Form, Symbol ANPT – Design and Inspection Standard*

SPR 1440.1, *Records Management Program Requirements*

SSC form 517, *Variance Request*

SSC form 716, *Materials Usage Agreement (MUA)*

SSC Standard 34-004, *Classes of Welding Inspection*

SSC Standard 47-000, *Index of Facility Piping System*

SSC Standard 79-002, *Sampling Requirements and Maximum Allowable Impurities for SSC Fluids and Fluid Systems*

SSC Standard 79-010, *SSC Requirements for Materials Used In LOX/GOX Service*

SSC Drawing No. 54000-GM30, *Specification for Materials Used In LOX and GOX Service Exempt from Batch Test Requirements*

SSC SOI-8080-0016, *Material and Process Control for Propulsion Test Facilities and Systems*

SSTD-8070-0007-CONFIG, *Variance and Alternate Standard Request*

SSTD-8070-0089-FLUIDS, *John C. Stennis Space Center Surface Cleanliness Requirements for SSC Fluid Systems*

USAF TO 00-25-223, *Integrated Pressure Systems and Components (Portable and Installed)*

4.0 REQUIREMENTS

a. All tubing shall be seamless; tubing with seam welds is not permitted.

b. All metallic and non-metallic materials, including lubricating oils and greases used to assemble tube systems, shall be compatible with the service media and must conform to material traceability and service media compatibility requirements delineated in other SSC

and NASA requirements documents. For example, SSC Standard 79-010, SSC Specification Control Drawing (SCD) 54000-GM30, and NASA-STD-6001 govern non-metal material compatibility requirements for oxygen and other oxidizer fluid (i.e. fluorine) systems. Guidance regarding hydrogen embrittlement resistant materials is provided in NASA/MSFC-STD-506 and ANSI/AIAA G-095-2004.

c. Requirements for cleanliness, packaging, and storage of tubing, tube fittings, and assembled tubing systems are given in section 4.7.

d. For all tubing, tube fitting, and other related products and services under the purview of this standard that are provided by vendors not located at SSC, the respective vendors shall provide a Certificate of Conformance which states that all provided products and services are in full conformance with this standard.

e. Installation of fluid tube systems shall conform to tube routing and external system support spacing requirements of USAF TO 00-25-223. Tables 1A and 1B provide recommended maximum span distance between external supports for tubing systems.

f. Contact between dissimilar metals shall be prevented or provisions to prevent galvanic corrosion shall be used in all tubing system installations.

g. A neat and orderly routing of tube systems, where multiple criss-crossing of tube runs is avoided, is required.

h. All connections and components shall be accessible for inspection, disassembly and removal.

i. Tube system routing shall incorporate expansion loops and offsets such that the yield stress is not exceeded under the combined stresses from internal fluid pressure, thermal expansion or contraction, dead weight loads, external interfaces, and wind loads.

j. In selected cases, a detailed stress analysis in accordance with ANSI/ASME B31.3 will be required to assure that yield stresses are not exceeded for system pressure retaining materials.

RELEASED - Printed documents may be obsolete; validate prior to use.

TABLE 1A
Spacing of External Supports for Tubing Systems with Tubing and Fittings Specified by Sections 4.1 and 4.2

Nominal Tube OD (inches)	Maximum Span (feet)		
	Stainless & Carbon Steel	Aluminum & Titanium Alloys	Bronze & Copper Alloys
1/8 to ½, excl.	4	4	3
½ to 1, excl.	6	5	4
1 to 2	9	7	5

TABLE 1B
Spacing of External Supports for Tubing Systems with (Coned-and-Threaded) Tubing and Fittings Specified by Sections 4.3 and 4.4

Nominal Tube OD (inches)	Service Fluid Type	Maximum Allowable Working Pressure (psig)	Maximum Spacing of Supports or Anchors (feet)
¼ to 1	Gaseous & Cryogenic	6,000 to 10,000	4
¼ to 1	Gaseous & Cryogenic	Above 10,000	3
¼ to 1, incl.	Hydraulic *	6,000 to 30,000	4
* **Note**: Liquid Service Fluid with Minimum Service Temperatures above -50°F			

4.1 Tubing for Fluid Pressure Less Than 10,000 psig

a. All tubing for fluid pressure less than 10,000 psig shall meet the requirements of one of the material specifications and grades listed in Table 2A. Planned use of any other material or specification requires either a Variance Request, form SSC-517, for facility fluid systems or a Materials Usage Agreement (MUA), form SSC-716, for STE, prepared and approved in accordance with SSTD-8070-0007-CONFIG or SSC SOI-8080-0016, respectively.

b. Tubing surface roughness shall not exceed an arithmetical average roughness (Ra) of 70 on inside surfaces and Ra of 40 on outside surfaces as defined by ASME B46.1.

c. The maximum depth of individual surface discontinuities shall not exceed limits specified in Table 2B.

d. Design of tube pressure systems for fluid pressures less than 10,000 psig shall meet, as a minimum, the requirements of ANSI/ASME B31.3. Hydrostatic and pneumatic pressure test

RELEASED - Printed documents may be obsolete; validate prior to use.

requirements are given in sections 4.8 and 4.9. In some situations, or to meet specific customer requirements, requirements that are more stringent with higher factors of safety may be required. Table 3A lists the maximum allowable working pressure for various tube sizes based on the minimum wall thicknesses permitted for ASTM A269 tubing and the requirements of ANSI/ASME B31.3. Refer to ANSI/ASME B31.3 for calculation of the maximum allowed pressure or minimum wall thickness required for other diameters and wall thicknesses. These pressure ratings also apply to tube bends provided the minimum wall thickness is maintained after bending.

CAUTION

Although the tubing may be rated to pressures as described in Table 3A, system pressure ratings may be limited to lower pressures based on tube fittings or other system components. The lowest pressure rating of any system component is the maximum allowed operating pressure for the tubing system.

e. Table 3B lists boss connection pressure ratings.

f. Table 3C lists increased pressure ratings for NPT end connections meeting additional requirements.

g. Table 3D lists required thread engagement length for NPT end connections.

h. All tubing dimensional tolerances for OD (Outside Diameter) and wall thickness, prior to swaging or flaring, shall conform to those shown in Table 4.

i. Flared tube ends: Tube ends to be used with flared fittings shall be flared to conform to the geometric requirements of SAE AS4330 or SAE AS33583.

RELEASED - Printed documents may be obsolete; validate prior to use.

TABLE 2A
Material Specifications for Austenitic Stainless Steel Tubes

Specification	Diameter Range, in [mm]	Thickness Range, in [mm]	Grade or Type	SMYS (ksi/MPa)	SMTS (ksi/MPa)	B31.3 Allowable Stress*
ASTM A269 (Seamless only)	0.25 I.D. and over [6.35 I.D.]	0.020 and over [0.508]	TP 304, TP 316, TP 321, TP 347	30/207	75/517	20.0 ksi 138 MPa
			TP304L, P316L	25/172	70/483	16.7 ksi 115 MPa
ASME SA213 ASTM A213	0.125 ID to 5.00 O.D. [3.175 to 127]	0.015 to 0.50 [0.381 to 12.7]	TP 304, TP 316, TP 321, TP 347	30/207	75/517	20.0 ksi 138 MPa
			TP304L, P316L	25/172	70/483	16.7 ksi 115 MPa
ASTM A632 (Seamless only)	0.050 to < 0.5 O.D. [1.27 to <12.7]	0.005 to <0.065 [0.127 to <1.651]	TP 304, TP 316, TP 321, TP 347	30/207	75/517	20.0 ksi 138 MPa
			TP304L, P316L	25/172	70/483	16.7 ksi 115 MPa
AMS 5556** (Type 1 only)	All diameters and wall thickness		347	30/207	75/517 Max. spec	20.0 kPi 138 MPa
AMS 5557** (Type 1 only)	All diameters and wall thickness		321	30/207	75/517 Max. spec	20.0 ksi 138 MPa
AMS 5566** (Type 1 only)	All diameters and wall thickness		304	75/517	105/724 Max. spec	40.0 ksi 276 MPa
AMS 5567** (Type 1 only)	All diameters and wall thickness		304	30/207	100/689 Max. spec	20.0 ksi 138 MPa
AMS-T-6845 (Type 1 only)	0.25 O.D. and over [6.35 O.D.]	All	304	75-110/ 517-759	105-140/ 724-965	35.0-46.7 ksi 241-322 MPa
MIL-T-8504 # (Type 1 only)	All diameters and wall thickness		304	30/207	75/517 Max. spec	20.0 ksi 138 MPa
MIL-T-8808 # (Type 1 only)	All diameters and wall thickness		321, 347	30/207	75/517 Max. spec	20.0 ksi 138 MPa

Notes: * to 150°F per ANSI/ASME B31.3, based on lesser of 1/3 SMTS and 2/3 SMYS.
(Only ASTM A269 is listed in ASME B31.3.)
** Hydraulic Tubing
# Specification is now inactive for new design, except for replacement purposes, but tubing previously manufactured under this specification can be used for existing and new systems when available.

TABLE 2B
Allowed Depth of Tubing Surface Discontinuities

Nominal Wall Thickness (inches)	Maximum Permissible Depth of Discontinuities (inches)
0.020 and Under	10 % of nominal wall thickness
0.021 through 0.030	0.0020
0.031 through 0.040	0.0025
0.041 through 0.050	0.0030
0.051 through 0.066	0.0040
0.067 through 0.085	0.0060
0.086 and Over	7.0 % of nominal wall thickness

RELEASED - Printed documents may be obsolete; validate prior to use.

TABLE 3A

Maximum Allowable Working Pressures, Stainless Steel Tubing and Tube Fittings with Flared and NPT End Connections; Tubing is in accordance with ANSI/ASME B31.3 (AISI Types 304, 316, 321 and 347).

Nominal Tube Wall Thickness	NOMINAL TUBE OUTSIDE DIAMETER (OD)								
	0.250	**0.375**	**0.500**	**0.750**	**1.000**	**1.250**	**1.500**	**1.750**	**2.000**
0.025	3571	2342	1848	1221	911	727	603	517	452
0.028	4035	2637	2079	1372	1022	816	677	579	507
0.032	4665	3037	2390	1574	1172	934	775	663	580
0.035	**5147**	3341	**2626**	1727	1285	1024	849	726	635
0.042	6306	4063	3185	2086	1550	1234	1022	874	764
0.049	**7515**	**4806**	3755	**2451**	**1817**	1445	1196	1023	893
0.058	*9361*	5790	4507	2927	2165	1720	1422	1215	1061
0.062	*10000*	6240	4848	3142	2322	1843	1523	1301	1136
0.065		6581	**5107**	**3304**	**2440**	1935	1599	1366	1192
0.072		7395	5720	3686	2717	2153	1778	1517	1324
0.083		*8951*	6711	4298	3158	2498	2060	1757	1532
0.094		*10000*	*7736*	4923	3606	2848	2346	2000	1742
0.095			***7827***	**4981**	**3648**	2880	2372	2022	1761
0.102			*8209*	5388	3938	3105	2556	2177	1896
0.109			*8834*	5800	4231	3332	2741	2334	2032
0.120			***9823***	**6461**	**4698**	3694	3035	2581	2246
0.125			*10000*	6767	4913	3859	3169	2695	2344
0.152				*8179*	6103	4773	3907	3315	2879
0.188					*7770*	6039	4923	4166	3610
0.190					*7862*	6112	4981	4214	3652
0.250						*8333*	6767	5696	4918
End Connection Type									
37° Flared Tube	9600	9600	7400	7150	5300	5200	4600	4600	4600
NPT (Non-H_2 Service) *	6200	4900	5600	5000	4000	3600	3600	3200	3200
NPT (H_2 Service)	3000	3000	3000	3000	3000	3000	3000	3000	3000

Notes: All dimensions are in inches, all pressures in psig, temperatures not exceeding 150°F. For "L" grades of stainless steel, the MAWP shall be multiplied by a factor of 0.833 based on equation (3c) of B31.3 and tube minimum wall thickness.

Tubing with pressure ratings shown in **BOLD** are usually stocked in the warehouse.

Entries shown in *italics* represent tubing with $t \geq D/6$. See ANSI/ASME B31.3, para.304.1.2 (b).

See section 4.2 for other restrictions on maximum working pressures on 37° flared tube fittings.

* If threaded pipe is connected to FNPT end connections, the listed pressure ratings above are valid only if pipe is Schedule 80S or heavier and if pipe material has allowable stress of 20,000 psi or higher per ASME B31.3. To attain higher pressure ratings for non-H_2 service with 20,000 psi allowed material stress, refer to Table 3C.

TABLE 3B
Boss Connection Pressure Ratings

Nom. Size (in.)	Maximum Allowable Working Pressure (psig)					
	SAE AS930 to SAE AS5202 w/ Harrison K-Seal ® or Equiv. #	**SAE AS930 to SAE AS5202 w/ SAE AS28778 O-Ring ***	**SAE AS1941 or AS4320 to SAE AS5202 w/ Harrison K-Seal ® or Equiv. #**	**SAE AS1941 or AS4320 to SAE AS5202 w/ SAE AS28778 O-Ring ***	**SAE AS1098 or AS4395 to SAE AS5202 w/ Harrison K-Seal ® or Equiv. #**	**SAE AS1098 or AS4395 to SAE AS5202 w/ SAE AS28778 O-Ring ***
0.25	5200	7150	4850	6800	6050	8000
0.375	4200	5950	4750	6500	5300	7000
0.50	4050	5500	5950	7350	5450	6900
0.75	2650	3700	4950	5950	6250	7300
1.00	2250	3200	5050	6050	4400	5350
1.25	1950	2750	4400	5200	5150	5950
1.50	1750	2450	4400	5050	5900	6650
1.75	1500	2150	3750	4450	5650	6250
2.00	1350	1950	3400	4050	6200	6600

Notes:
* See section 4.2 for SAE AS28778 O-Ring requirements and allowances, recommendations, and requirements that govern substitution of other type seals for these O-Rings.
\# See section 4.2 for K-Seal ® requirements.

TABLE 3C

Increased Pressure Ratings (above those listed in Table 3A) for NPT End Connections with Associated Requirements; Non-H_2 Service Only

Nominal Size (in.)	Pressure Rating (psig)	Minimum OD or Distance Between Flats on FNPT Part (in.) *	Minimum Schedule of Connected Pipe, if used	Maximum Allowed Bore of MNPT Part (in.) **
1/4	7700	0.794	80S	0.332
3/8	6500	0.931	80S	0.455
1/2	6000	1.127	80S	0.583
1/2	8050	1.264	160	0.511
1/2	10550	1.484	XXS	0.326
3/4	7650	1.546	160	0.667
3/4	9050	1.714	XXS	0.511
1	4700	1.648	80S	1.002
1	6800	1.850	160	0.878
1	8800	2.162	XXS	0.689
1-1/4	4000	2.010	80S	1.326
1-1/4	5350	2.163	160	1.223
1-1/4	8150	2.529	XXS	0.992
1-1/2	3650	2.265	80S	1.550
1-1/2	5300	2.472	160	1.408
1-1/2	7550	2.791	XXS	1.200
2	5250	3.086	160	1.775
2	6600	3.323	XXS	1.612

Notes: * Increase Dimension by Distance Between Axial Centerline of Part, at Its FNPT End Connection as defined by OD or Midpoints between Parallel External Flats, and Axial Centerline of FNPT Thread Pattern; if this distance is greater than 0.001-inches (Concentricity of thread and part OD outside 0.001-inch allowed tolerance).

** Decrease Dimension by Distance Between Axial Centerline of Bore (or ID), at the MNPT End Connection, and Axial Centerline of the MNPT Thread Pattern; if this distance is greater than 0.001-inches (Concentricity of thread and bore / ID outside 0.001-inch allowed tolerance).

- Material used for fittings and pipe must have allowable stress of 20,000 psi or higher per ASME B31.3 for above pressure ratings.

TABLE 3D
Required Thread Engagement Length for NPT End Connections

Nominal Size (inches)	Minimum Allowed Thread Engagement Length (inches)
1/16	0.160
1/8	0.162
1/4	0.235
3/8	0.241
1/2	0.320
3/4	0.339
1	0.422
1-1/4	0.446
1-1/2	0.463
2	0.496

Note: Above values reflect minimum allowed thread engagement for all cases. However, longer thread engagements shall be attained as needed to provide snug, wrench-tight, or interference fit in order to prevent loosening of connection under cyclic loads and vibration conditions.

TABLE 4
Permissible Variation in Diameter and Wall Thickness

Tube Size Outside Diameter, in.	Permissible Variation in Outside Diameter, in. (mm)	Permissible Variation in Wall Thickness *
Up to 0.50	± 0.005 (0.13)	± 15%
0.50 to 1.00, excl	± 0.005 (0.13)	± 10%
1.00 to 1.50, excl	± 0.006 (0.15)	± 10%
1.50 to 2.00	± 0.010 (0.25)	± 10%

*** Note:** When tubes have an inside diameter of 60% or less of the outside diameter, the permissible variation in wall thickness is ± 12.5 %.

4.2 Fittings for Fluid Pressures Less Than 10,000 psig

Forged, wrought or cold worked metallic fitting materials shall be used. Castings are not permitted.

4.2.1 Flared Tube Fittings

a. 37° flared tube fittings made of type 304, 316, 321, or 347 austenitic stainless steel may be used in pressure systems for pressures up to those shown in Table 3A for various tubing sizes provided the manufacturer's pressure or temperature rating for any component is not exceeded. Maximum allowable working pressure for tube fittings connected to female (internal) thread boss connections are limited to those specified in Table 3B. Appendix B provides diagrams of flared tube and boss connections listed in Tables 3A and 3B.

b. For tube fittings made of materials other than type 304, 316, 321, or 347 austenitic stainless steel, the maximum allowable working pressure shall be determined as follows:

$$P = P_{T2} \times (S_A/20{,}000)$$

where: P = Maximum Allowable Working Pressure (in psig)
P_{T2} = Maximum Allowable Working Pressure from Table 3A or 3B above (in psig)
S_A = Allowed Stress of New Material per ASME B31.3 (in psi)

c. Prior to assembly of tube to flared tube fittings, the tube end shall be flared to conform to the geometric requirements of SAE AS4330 or SAE AS33583.

~~d.~~ For flared tube fittings (such as adaptor fittings) with multiple types or sizes of end connections, the pressure rating of the fitting shall be no greater than that of the end connection having the lowest pressure rating.

e. SAE AIR310 is an aid for locating and identifying various fitting designs and configurations. Tubing and tube fittings listed in SAE AIR310 that have flareless, beam seal, socket weld, swivel, and hose type end connections are not permitted. Tube and fittings made of titanium shall not be used in oxidizer systems nor in systems rated for oxidizer service; i.e., oxidizer media can contact internal surfaces. Aluminum fittings are limited to 400-psia in systems rated for oxygen services.

f. Other tube fittings not listed in SAE AIR310 with straight thread end connections conforming to SAE AS930, AS1098, AS1099, AS1941, AS4320, AS4395, AS4396, and

AS5202 and with NPT end connections conforming to ANSI/ASME B1.20.1, SAE AS5201, and SAE AS71051 are permitted provided that minimum wall thicknesses (of pressure boundaries) are equal to or greater than those specified for similar fittings listed in SAE AIR310.

4.2.2 Seals Used for Boss Connections

a. OmniSeal®, OmniSeal RACO®, Raco® or equivalent spring energized seals should be substituted for SAE AS28778 O-Rings in cryogenic, hydrogen, helium, and high pressure gas services to provide leaktight sealing; i.e. assure conformance to leak test requirements in section 4.9. With the exception of K-Seals ®, seals that are used as substitutes for SAE AS28778, O-Rings shall fit within same seal containment cavity and be totally encapsulated as shown in Figures B-3 and B-5.

b. For positionable boss connections, as shown in Figure B-5, install in accordance with SAE AS758, except that hydraulic fluid lubricant shall not be used for systems rated for oxygen, oxidizer, or cryogenic services nor for any other systems that interface with oxygen, oxidizer, or cryogenic systems; e.g., where the possibility of lubricant migration into an oxidizer or cryogenic system exists.

c. If used, lubricants for oxidizer and cryogenic fluid systems shall conform to requirements stated in section 4.0.

d. K-Seals®, illustrated in Figure B-4, shall be Stanley-Harrison series 12120 or equivalent with spacer thickness not to exceed 0.063-inch.

e. O-Rings used in cryogenic and oxidizer services shall be Virgin PTFE, except that Viton® is also permitted for non-cryogenic oxygen service.

f. O-Rings used for oxygen services shall be PTFE or Viton® conforming to SSC Drawing 54000-GM30.

g. O-Rings used for other services shall be PTFE, Viton®, or Buna-N.

h. Spring energized seals, including OmniSeal®, OmniSeal RACO®, Raco®, K-Seal® type seals or equivalents, shall be PTFE, metallic with PTFE coating, or uncoated metallic.

RELEASED - Printed documents may be obsolete; validate prior to use.

CAUTION

Uncoated metallic seals are highly prone to leakage if 16 RMS or smoother microfinish is not maintained on all seal contact surfaces. Uncoated metallic seals should be used only where necessary, such as cases where service temperatures or service fluid compatibility issues preclude the use of PTFE or PTFE coated seals. User is cautioned to use great care during assembly and disassembly of boss connections with uncoated metallic seals to assure that finishes on sealing surfaces are not scratched or damaged.

i. Metallic materials used for spring energized seals are restricted to type 304, 304L, 316, 316L, A286, 17-4, and 17-7 stainless steels, Inconel 718, Inconel X-750, and Elgiloy® alloys unless an alternate material is approved under a Variance Request (form SSC-517) or MUA (form SSC-716). Type 17-4PH and 17-7PH stainless steels are not permitted for hydrogen service.

4.2.3 NPT Connections on Tube Fittings

a. NPT connections on tube fittings may be used at pressure ratings specified on Table 3A or Table 3C. If higher pressure ratings of Table 3C are used, then dimensions, schedule of connected pipe, if applicable, and material properties must conform to those listed/stated on that table. In all cases, the length of thread engagement shall be equal to or greater than values shown on Table 3D.

b. Virgin PTFE tape shall be used for sealing NPT thread connections.

c. For oxygen service, the virgin PTFE tape shall conform to the latest revision of NASA/SSC Drawing 54000-GM30.

d. The PTFE tape shall be wrapped around the external (male) thread in the direction used for loosening the thread connection, stretching over threads so that it conforms to the shape of the thread.

e. There shall be no overlapping PTFE tape on the engaging thread. Overlap the starting turn (wrap or layer) by approximately ½-inch and break the tape. For one-inch and larger NPT thread connections use two identical wrappings side be side. Assembly of thread connection can then be made.

RELEASED - Printed documents may be obsolete; validate prior to use.

CAUTION

NPT connectors used in hydrogen and helium services can be highly prone to leakage, especially at operating pressures exceeding 3000-psig, cryogenic service temperatures, or moderate to high frequency cyclic loading and stress conditions.

f. The use of additional turns (wraps or layers) of PTFE tape on the male thread may be used to acquire leak-tight NPT connections provided that minimum thread engagement length specified in Table 3D is attained. When additional turns of PTFE tape are used, the final turn shall overlap the start of the initial turn by approximately ½-inch. Break off remaining tape prior to assembling the connection.

g. When disassembling NPT connections, remove all old tape from the internal and external threads and use new PTFE tape as described above prior to reuse.

4.2.4 SWAGELOK® Flareless Type Tube Fittings

a. The use of Swagelok® type tube fittings is normally restricted to systems in which the maximum operating pressure does not exceed 3000 psig for fittings up to 1-inch tube size and 1500 psig for fittings over 1 inch through 2 inches tube sizes and the temperature does not exceed 150°F. The listing of approved Swagelok® flareless type tube fittings allowed for use at SSC is provided in Appendix C.

b. When operating conditions of the system do not allow for use of 37° flared tube fittings or coned and threaded type tube fittings, Swagelok® type tube fittings may be used at pressures higher than those listed above. Such use shall be covered by an approved Variance Request (form SSC-517) or MUA (form SSC-716).

c. All Swagelok® type flareless type tube fittings shall be manufactured from AISI 316 stainless steel unless operating pressures, temperatures, and hazards associated with service media preclude the use of this material.

d. Use of materials other than AISI 316 stainless steel shall be covered by an approved Variance Request or MUA.

e. The system design pressure shall not exceed the manufacturer's pressure rating for the fitting. Swagelok® type tube fittings are generally rated to the maximum working pressure of the tubing. However, some fittings with type AN, O-Seal, SAE/MS or pipe ends may have lower ratings.

f. To minimize the possibility of leaks in any gas system due to tube surface defects such as scratches, Swagelok® recommends the minimum wall thickness shown in Table 5 be used. Assembly of Swagelok® type fittings shall be in accordance with manufacturers' recommended procedures.

Table 5
Minimum Recommended Tube Wall Thicknesses
For Swagelok® Fittings in Gas Service (from manufacturer's catalog)

Tube OD, in.	Nominal Minimum Wall Thickness, in.	Tube OD, in.	Nominal Minimum Wall Thickness, in.
0.25	0.028	0.875	0.083
0.375	0.035	1.00	0.083
0.50	0.049	1.25	0.109
0.625	0.065	1.50	0.134
0.75	0.065	2.00	0.180

4.3 Tubing for Fluid Pressure of 10,000 psig and Higher

a. Coned and (Left Hand) Threaded Tubing (also known as Superpressure® Tubing) may be used for medium and high pressure service when the required operating pressure exceeds the capability of flared or swaged tubing and tube fitting systems. Typical pressure ratings for seamless cold worked (cold drawn) AISI type 304/316 stainless steel coned and threaded tubing at a maximum service temperature of 100°F are shown in Table 6.

b. Maximum operating pressure for higher temperatures shall be in accordance with manufacturer's published recommendations.

c. Hydrostatic and pneumatic pressure test requirements shall conform to sections 4.8 and 4.9. Consult manufacturer's catalogs for other diameters and pressures.

CAUTION

Although the tubing may be rated to pressures as described in Table 6, system pressure ratings may be limited to lower pressures based on tube fittings or other system components. The lowest pressure rating of any system component is the maximum allowed operating pressure for the tubing system.

d. Surface finishes for inside diameter (inner bore) surfaces of Coned and Threaded Tubing shall be 100 RMS or smoother.

e. Outside diameter surfaces of Coned and Threaded Tubing shall have a bright surface finish, nominally 250 RMS or smoother.

f. The depth of surface discontinuities or defects shall be no greater than 0.004-inches for inside diameter surfaces and no greater than 0.005-inches for outside diameter surfaces.

TABLE 6
Maximum Allowable Working Pressures
Coned and LH Threaded Medium and High Pressure Tubing
Maximum Service Temperature 100° F

Nominal Tube Size, in.	Tube ID, in.	Pressure Rating, psig (to Temp. 100°F)	Flow Area, in.^{2}	Producers (see Appendix E)
0.5625	0.359	10,000	0.101	AE
0.75	0.516	10,000	0.209	AE, HiP
1.00	0.688	10,000	0.371	AE, HiP
0.25	0.109	20,000	0.009	AE, BuT, HiP
0.375	0.203	20,000	0.032	AE, BuT, HiP
0.5625	0.312	20,000	0.076	AE, BuT, HiP, NSI
0.75	0.438	20,000	0.151	AE, BuT, HiP
1.00	0.562	20,000	0.248	AE, BuT, HiP
1.00	0.438	30,000	0.151	AE, HiP
0.5625	0.250	40,000	0.048	AE
0.25	0.083	60,000	0.005	AE, BuT, HiP, NSI
0.375	0.125	60,000	0.012	AE, BuT, HiP, NSI
0.5625	0.187	60,000	0.028	AE, BuT, HiP, NSI

Note: Above pressure ratings correspond to tube and fittings made of cold worked AISI Type 304/316 stainless steel with SMYS of 60,000 psi and SMTS of 110,000 psi (1/8 hard condition). If tube and fittings are made of another material, new pressure ratings are determined as follows:

$$P_{new} = P_{T4} \times (S_A/40{,}000)$$

where: P_{new} = New Pressure Rating (in psig)
P_{T4} = Pressure Rating from Table 5 (in psig)
S_A = Allowed Stress of New Material per ASME B31.3 (in psi)

For cold worked stainless steel parts that are welded, see Section 4.5 for pressure rating reductions.

4.4 Coned and (Left Hand) Threaded Tube Fittings

a. Coned and threaded tube fittings are those that utilize end connection geometries illustrated in Appendix D.

b. Medium pressure coned and threaded tubing fittings (10,000 psig to 20,000 psig) are not interchangeable with high pressure coned and threaded tube fittings (30,000 psig and over).

c. Coned and threaded tube fittings that also have other types of end connections allowed by this standard (such as MS/AN to Autoclave and other adaptor fittings) may be used, but the pressure rating of the fitting shall be down-rated to that of the fitting connection having the lowest pressure rating.

d. Tube ends shall be prepared as shown in Appendix D prior to connecting the respective tube fitting connection. It is critical that all burrs, shavings, slivers, and contaminant particles be removed from the conical taper end and tip of each tube end prior to connecting a tube to a fitting.

e. To achieve improved leak-tight integrity of the coned and threaded type tubing connection it may be necessary to hone or wipe the conical surfaces to an 8 RMS or smoother microfinish and to assure that the rim of the conical tip on the tube or male connection is coplaner in a plane that is perpendicular to the tube or fitting bore axial centerline within ± ¼ degree.

4.5 Welded Tube Connections

a. Full penetration welded tube connections are permitted. Socket or other type weld connections that have surfaces not accessible to visual inspection and removal of contaminants by cleaning agents are not permitted.

b. Welding shall meet the requirements of ANSI/ASME B31.3.

c. To obtain the maximum pressure rating for the system, 100% of the welds shall be non-destructively examined and pass a Class 1 weld inspection in accordance with SSC Standard 34-004.

d. If 100% NDE is not performed, the system pressure rating shall be reduced in accordance with the requirements of ANSI/ASME B31.3.

e. When coned and threaded tubing and tube fittings made of cold worked or hardened (1/8 hard condition) stainless steel are welded, the pressure rating of each welded tube or fitting shall be reduced to 50% of the corresponding value listed in Table 6.

4.6 Pipe Runs

Butt-welded pipe and pipe fittings are approved alternates to the use of pressure tubing. Refer to applicable CEF-issued SSC piping system standards and specifications for pipe, pipe fitting, and pipe system requirements.

4.7 Cleanliness, Packaging, and Storage Requirements

a. All cleaning, packaging, and storage of tubing shall conform to all applicable requirements of the applicable tubing specification listed in Table 2A.

b. All tubing and tube fittings received from off-site vendors and in storage shall be visually free of drawing compounds, carbon, dirt, dust, visible surface oxides, grit, metallic flakes, scale, surface films, loose or adherent particles, foreign matter, or other detrimental materials.

c. Prior to acceptance at NASA/SSC and precision cleaning processes, all tubing shall be 100% inspected for cleanliness and freedom from contaminants, such as drawing compounds, carbon, dirt, and dust, by one of the following methods:

    1. passing or forcing a solvent-soaked swatch of lint-free yarn or cloth, or a felt plug through the tube. Isopropyl alcohol, methanol, ethanol, denatured alcohol, or acetone followed by alcohol are acceptable solvents. Because acetone leaves a residual film, cleaning with acetone alone is not acceptable. While a heavy discoloration of the swatch is unacceptable, a light discoloration is acceptable unless particles of grit or metallic flakes are visually detectable without the use of magnification (nominally larger than 40 microns in any dimension);
    2. pushing or forcing a rod or smaller diameter tube through the entire length of each inspected tube to verify no obstructions are contained or trapped inside the same; or,
    3. an alternate method that is documented, submitted to, and approved in writing by the NASA/SSC OSMA.

d. The method used to inspect tubing for cleanliness and freedom from contaminants shall not result in the generation of additional or residual internal gross contamination.

RELEASED - Printed documents may be obsolete; validate prior to use.

e. All tubing and tube fittings that are not installed or used in systems shall be packaged and stored to maintain cleanliness of threaded and internal, service media wetted, surfaces.

f. Tubing shall be capped or sealed at both ends to prevent contaminant entry when not in use or when placed in storage for later use.

g. For all tubing stored in outdoor environments, all caps, plugs, and other packaging exposed to the environment shall be made of materials that do not degrade in 100% humidity environments and exposure to sunlight.

h. Prior to final installation or assembly into tubing systems, all tubing and tube fittings shall be precision cleaned and certified to meet clean level requirements of the respective systems in accordance with SSTD-8070-0089-FLUIDS.

i. All precision cleaning and clean level certifications of tubing, tube fittings, and tubing systems per SSTD-8070-0089-FLUIDS shall be performed prior to the system leak tests required under section 4.9.

4.8 Proof Pressure Test Requirements

a. With the exception of selected vent system segments/sections, all tube system sections, components, and connections shall be hydrostatically tested at 1.5 times the maximum allowable working pressure (MAWP) of the tubing, as specified by this standard, prior to placing the system into operational service.

b. In tubing systems where one or more system components are rated at a lower MAWP than that of the tubing, the system shall be hydrostatically tested at 1.5 times the design pressure of the system prior to placing the system into operational service.

c. Vent system segments and sections exempted from proof pressure tests are limited to those where the total axial centerline length is no greater than 10 feet and where the system section/segment exits directly to ambient atmosphere. Furthermore, there shall be only one mechanical, non-welded, joint in each of the respective sections/segments, which is to be located at the upstream end of this section/segment.

d. On a case-by-case basis and with approval of the NASA Safety representative, pneumatic pressure tests at 1.25 times maximum system operating pressure or at 1.25 times system design pressure are permitted in lieu of hydrostatic pressure testing. Appropriate measures to reduce or eliminate rapid explosion or gas decompression hazards to personnel and hardware

to acceptable risk and hazard abatement levels shall be incorporated when pneumatic proof pressure tests are performed.

e. All proof pressure tests shall be in full compliance with all applicable requirements of 49 CFR 195.

f. All proof pressure test procedures shall conform to all applicable (pressurized) leak test requirements of ASME B31.3.

g. Hydrostatic proof pressure tests may be performed on separate tubing system sections, fittings, tubing runs, and components prior to precision cleaning and final assembly of the same. Systems and system sections may be disassembled after hydrostatic proof pressure tests to enable or facilitate precision cleaning of system hardware. However, with the exception of crush washers and (microscopically thin) oxide layers produced on material surfaces during passivation processes, the configuration, material properties, and material boundary wall thicknesses of tested parts, fittings, and tubing may not be altered after completion of the hydrostatic proof pressure tests. Additionally, proof pressure tests shall be performed after completion and acceptance of all tubing system weld joints/connections.

4.9 System Leak Test Requirements

a. With the exception of selected vent system segments/sections, pneumatic leak tests are required for all fluid tube systems, after final assembly of the system. For tubing systems that are certified as precision clean per one of the cleanliness levels, except Level 3 (Commercial Clean), under SSTD-8070-0089-FLUIDS, all test gases shall conform to SSC Standard 79-002.

b. Vent system segments and sections exempted from leak tests are limited to those where the total axial centerline length is no greater than 10 feet and where the system section/segment exits directly to ambient atmosphere. There shall be no cross-sectional flow area changes in each of the respective sections/segments and only one mechanical, non-welded, joint which is to be located at the upstream end of each of these sections/segments.

c. Leak tests that are not performed by NASA test operations personnel shall be performed with test gas at maximum system operating pressure or at system design pressure.

d. For hydrogen and helium tubing systems, leak test gas shall be helium or a nitrogen-and-helium gas mixture with a minimum of 10% volume (mole) fraction of helium. Nitrogen, air, helium, or a mixture of these gases may be used for leak testing of systems that are not rated or used in hydrogen or helium service.

e. When leak tests are not performed with test gas at maximum system operating pressure nor at system design pressure, they shall be performed at pressures between 40 and 150 psig.

f. Systems with flammable, highly reactive, and hazardous service fluids, such as hydrogen and oxygen, shall be equipped with fully operable and remote leak detection equipment prior to and during system pressurization.

g. Leakage through all system mechanical and welded joints shall be measured by "soap solution," "Leak-Tec®," or equivalent bubble test or mass spectrometer with sensitivity set to 10^{-4}sccm or lower. Zero visible or "bubble tight" external system leakage is required for bubble tests. A maximum of 10^{-4} sccm external system leakage is allowed for mass spectrometer tests unless a higher leakage rate is deemed acceptable by the NASA Mechanical Test Operations Engineer, Engineer responsible for the tested tubing system(s), or governing CCB.

h. All system leakage test procedures shall conform to all applicable ANSI/ASME B31.3 requirements.

i. All system leakage tests shall conform to applicable requirements of 49 CFR 195.

5.0 RECORDS AND FORMS

Records and forms required by the procedures of this standard shall be maintained in accordance with SPR 1440.1. All records and forms are assumed to be the latest edition unless otherwise indicated. Forms may be obtained from the SSC Electronic Forms repository or from the NASA SSC Forms Management Officer. Quality Records are identified in the SSC Master Records Index.

Appendix A - Acronyms, Abbreviations, and Definitions

AIAA	American Institute of Aeronautics and Astronautics
AISI	American Iron and Steel Institute
ANSI	American National Standards Institute
AMS	Aerospace Material Specification (from SAE)
ASHRAE	American Society of Heating, Refrigeration, and Air Conditioning Engineers
ASME	American Society of Mechanical Engineers
ASTM	American Society for Testing and Materials
CCB	Configuration Control Board
CEF	(NASA SSC) Central Engineering Files
DR	Deviation Request
FNPT	Female (Internal Thread) NPT
H_2	Hydrogen
IAPMO	International Association of Plumbing and Mechanical Officials
HVAC	Heating, Ventilating and Air Conditioning
LH	Left Hand(ed)
MAWP	Maximum Allowable Working Pressure
MNPT	Male (External Thread) NPT
MPa	Mega-Pascal
MSFC	Marshall Space Flight Center
MUA	Materials Usage Agreement (form SSC-716)
NASA	National Aeronautics and Space Administration
NPS	Nominal Pipe Size
NPSM	National Pipe Straight Mechanical (ANSI/ASME B1.20.1)
NPT	(American) National (Standard Taper) Pipe Thread (ANSI ASME B1.20.1)
OD	Outside Diameter
OSMA	Office of Safety & Mission Assurance
psi	Pounds Force per Square Inch
psig	Pounds Force per Square Inch (Gauge)
PTFE	Polytetrafluoroethylene
Ra	Roughness Average (in micro-inches, ASME B46.1)
RMS	Root Mean Square (Roughness, in micro-inches, ASME B46.1)
SAE	Society of Automotive Engineers
sccm	standard cubic centimeter per minute
SCD	Specification Control Drawing
SOI	Standard Operating Instructions
SMYS	Specified Minimum Yield Strength
SMTS	Specified Minimum Tensile Strength
SSC	Stennis Space Center

SSTD	Stennis Space Center Standard
STE	Special Test Equipment (provided by SSC)
USAF	United States Air Force
UPC	Uniform Plumbing Code
XXHY	Double Extra Heavy (Pipe Schedule)
XXS	Double Extra Strong (Pipe Schedule)

Tube For the purposes of this standard, tube is defined as a pressure-tight cylinder used to convey a fluid or to transmit a fluid pressure, with its dimensions specified by its outside diameter (OD) and wall thickness in decimal (preferred) or fraction of an inch. Tube sizes covered by this standard range from 0.05” to 2” OD, with wall thickness ranging from 0.005” to 0.250”.

Pipe For reference purposes, a pipe is defined as a pressure-tight cylinder used to convey a fluid or to transmit a fluid pressure, with its dimensions specified by its nominal pipe size (NPS) and schedule. For example, stainless steel pipe sizes range from 1/8” NPS to 72” diameter and above. Pipe schedules, which refer to wall thickness, range from 5 (or 5S for stainless steel pipe) to XXS (or XXHY) and above.

RELEASED - Printed documents may be obsolete; validate prior to use.

Appendix B - Flared Tube and Straight Thread Boss Connections

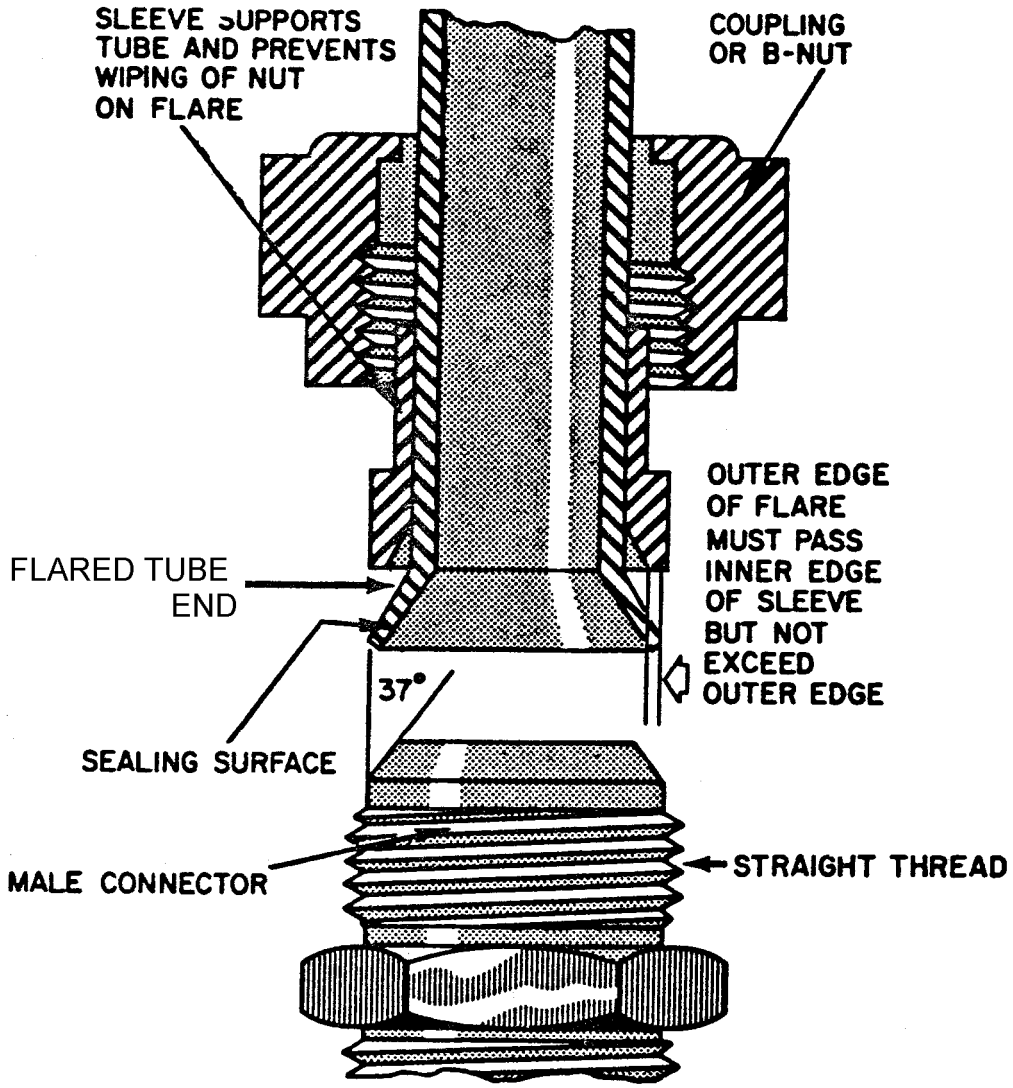

<u>Figure B-1.</u> Three-Piece 37° Flared Tube Fitting Connection, Disassembled

RELEASED - Printed documents may be obsolete; validate prior to use.

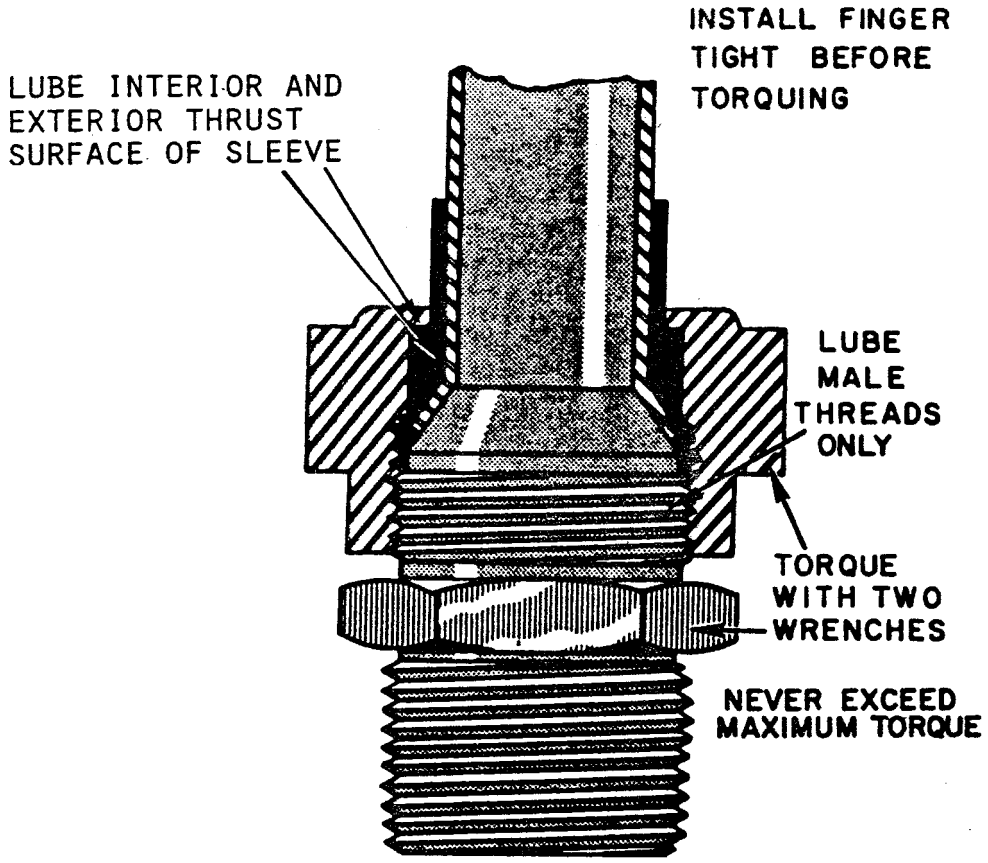

<u>Figure B-2.</u> Three-Piece 37° Flared Tube Fitting Connection, Assembled

RELEASED - Printed documents may be obsolete; validate prior to use.

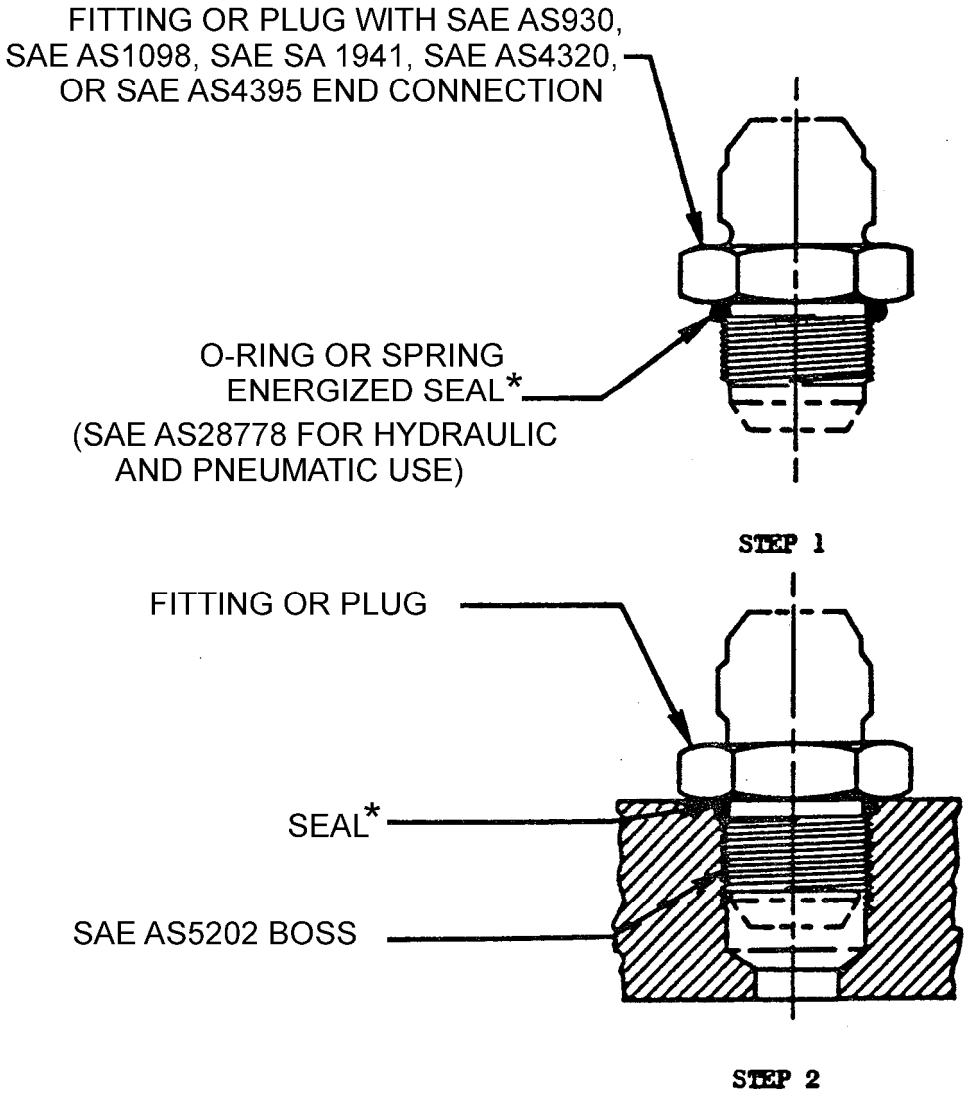

* Reference Section 4.2, "Seals Used for Boss Connections" subsection, for detailed seal requirements

Figure B-3. SAE AS930, AS1098, AS1941, AS4320, or AS4395 to SAE AS5202 Boss Connection with O-Ring or Spring Energized Seal

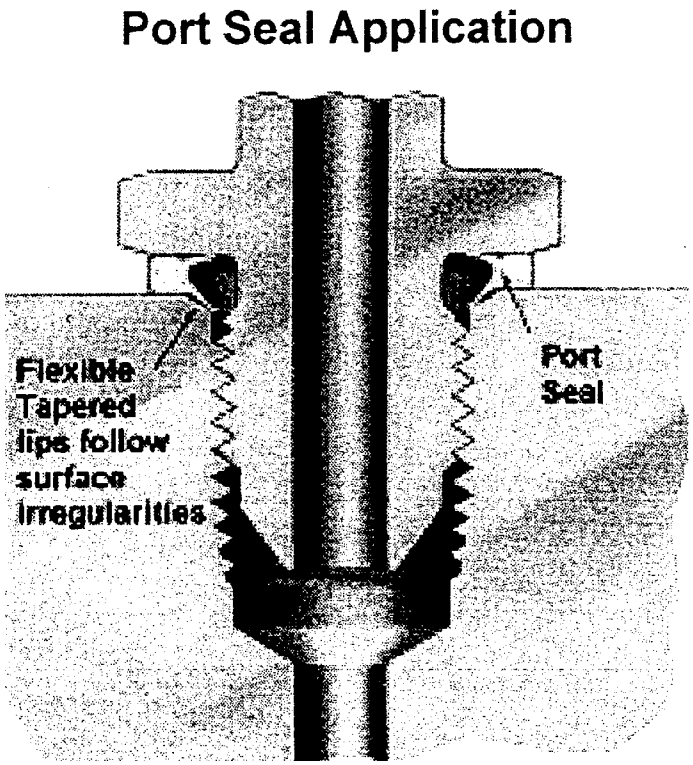

<u>Figure B-4.</u> SAE AS930, AS1098, AS1941, AS4320, or AS4395 to SAE AS5202 Boss Connection with K-Seal ® or Equivalent Type Seal

RELEASED - Printed documents may be obsolete; validate prior to use.

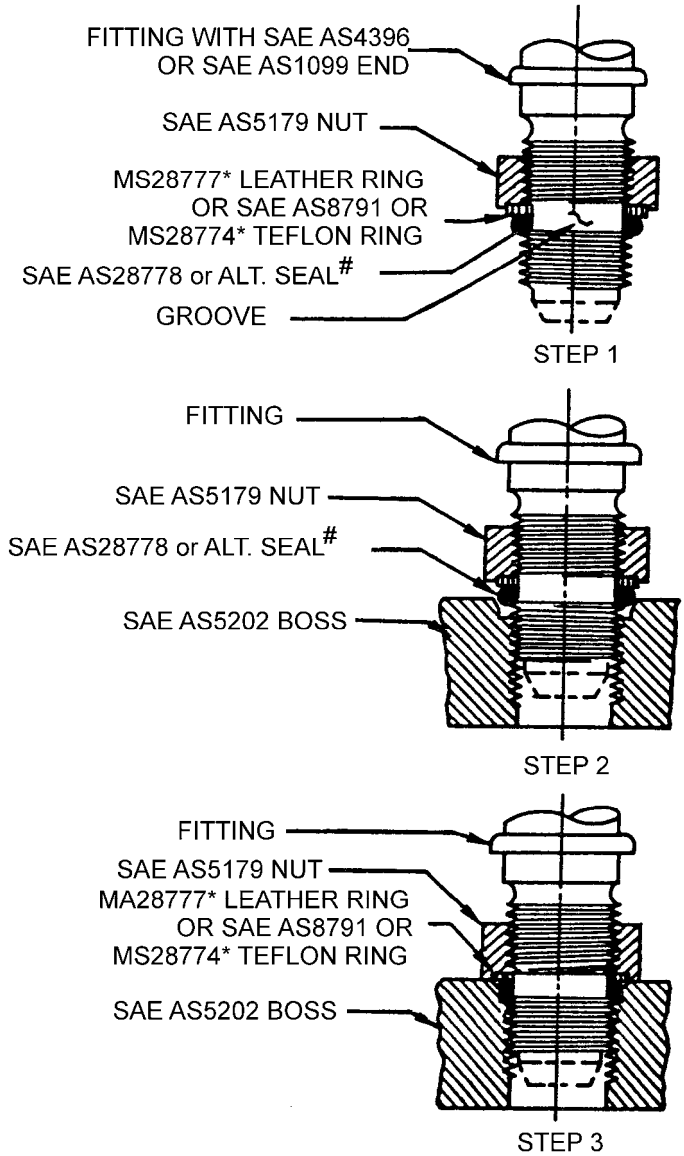

* MS28774 and MS28777 rings are used for existing designs and replacement purposes only, not to be used for new designs and systems

\# Refer to "Seals Used for Boss Connections" subsection in Section 4.2 for detailed requirements for Alternate and SAE AS28778 Seals

<u>Figure B-5.</u> Positionable Fitting End into SAE AS5202 Boss

RELEASED - Printed documents may be obsolete; validate prior to use.

Appendix C - Approved Double Ferrule Flareless Type (Swagelok®) Tube Fittings

Swagelok® to Male NPT Adapter		
Tube OD (in.)	NPT Nom. Pipe Size (in.)	Swagelok® Basic Part Number *
1/16	1/16	-100-1-1
1/16	1/8	-100-1-2
1/16	1/4	-100-1-4
1/8	1/16	-200-1-1
1/8	1/8	-200-1-2
1/8	¼	-200-1-4
1/8	3/8	-200-1-6
1/8	1/2	-200-1-8
3/16	1/8	-300-1-2
3/16	¼	-300-1-4
¼	1/16	-400-1-1
¼	1/8	-400-1-2
¼	¼	-400-1-4
¼	3/8	-400-1-6
¼	½	-400-1-8
¼	3/4	-400-1-12
5/16	1/8	-500-1-2
5/16	¼	-500-1-4
5/16	3/8	-500-1-6
3/8	1/8	-600-1-2
3/8	¼	-600-1-4
3/8	3/8	-600-1-6
3/8	½	-600-1-8
3/8	¾	-600-1-12
½	1/8	-810-1-2
½	¼	-810-1-4
½	3/8	-810-1-6
½	½	-810-1-8
½	¾	-810-1-12
½	1	-810-1-16
5/8	3/8	-1010-1-6
5/8	½	-1010-1-8
5/8	¾	-1010-1-12
* Add "SS" prefix to Basic Part No. for type 316 Stainless Steel		

Swagelok® to Male NPT Adapter (Continued)		
Tube OD (in.)	NPT Nom. Pipe Size (in.)	Swagelok® Basic Part Number *
¾	½	-1210-1-8
¾	¾	-1210-1-12
¾	1	-1210-1-16
7/8	3/4	-1410-1-12
7/8	1	-1410-1-16
1	1/2	-1610-1-8
1	3/4	-1610-1-12
1	1	-1610-1-16
1 ¼	1	-2000-1-16
1 ¼	1 ¼	-2000-1-20
1 ½	1 ½	-2400-1-24
2	2	-3200-1-32
* Add "SS" prefix to Basic Part No. for type 316 Stainless Steel		

RELEASED - Printed documents may be obsolete; validate prior to use.

Metric Swagelok® to Male NPT Adapter		
Tube OD (mm)	NPT Nom. Pipe Size (in.)	Swagelok® Basic Part Number *
2	1/8	-2MO-1-2
3	1/8	-3MO-1-2
3	1/4	-3MO-1-4
4	1/8	-4MO-1-2
4	1/4	-4MO-1-4
6	1/8	-6MO-1-2
6	1/4	-6MO-1-4
6	3/8	-6MO-1-6
6	1/2	-6MO-1-8
8	1/8	-8MO-1-2
8	1/4	-8MO-1-4
8	3/8	-8MO-1-6
8	1/2	-8MO-1-8
10	1/8	-10MO-1-2
10	1/4	-10MO-1-4
10	3/8	-10MO-1-6
10	1/2	-10MO-1-8
10	3/4	-10MO-1-12
12	1/8	-12MO-1-2
12	1/4	-12MO-1-4
12	3/8	-12MO-1-6
12	1/2	-12MO-1-8
12	3/4	-12MO-1-12
14	1/4	-14MO-1-4
14	3/8	-14MO-1-6
14	1/2	-14MO-1-8
15	1/2	-15MO-1-8
16	3/8	-16MO-1-6
16	1/2	-16MO-1-8
16	3/4	-16MO-1-12
18	1/2	-18MO-1-8
18	3/4	-18MO-1-12
20	1/2	-20MO-1-8
20	3/4	-20MO-1-12
22	3/4	-22MO-1-12
* Add "SS" prefix to Basic Part No. for type 316 Stainless Steel		

Metric Swagelok® to Male NPT Adapter (Continued)		
Tube OD (mm)	NPT Nom. Pipe Size (in.)	Swagelok® Basic Part Number *
22	1	-22MO-1-16
25	1/2	-25MO-1-8
25	3/4	-25MO-1-12
25	1	-25MO-1-16
28	1	-28MO-1-16
28	1 1/4	-28MO-1-20
32	1 1/4	-32MO-1-20
38	1 1/2	-38MO-1-24
* Add "SS" prefix to Basic Part No. for type 316 Stainless Steel		

Swagelok® to Male NPT Bulkhead Adapter		
Tube OD (in.)	NPT Nom. Pipe Size (in.)	Swagelok® Basic Part Number *
1/8	1/8	-200-11-2
1/4	1/8	-400-11-2
1/4	1/4	-400-11-4
3/8	1/4	-600-11-4
3/8	3/8	-600-11-6
3/8	1/2	-600-11-8
1/2	3/8	-810-11-6
1/2	1/2	-810-11-8
3/4	3/4	-1210-11-12
1	1	-1610-11-16
* Add "SS" prefix to Basic Part No. for type 316 Stainless Steel		

Metric Swagelok® to Male NPT Bulkhead Adapter		
Tube OD (mm)	NPT Nom. Pipe Size (in.)	Swagelok® Basic Part Number *
6	1/4	-6MO-11-4
12	1/2	-12MO-11-8
* Add "SS" prefix to Basic Part No. for type 316 Stainless Steel		

Swagelok® to Male SAE/MS Straight Thread Adapter		
Tube OD (in.)	SAE/MS Thread Size (in.)	Swagelok® Basic Part Number *
1/8	5/16-24	-200-1-2ST
1/8	7/16-20	-200-1-4ST
1/8	9/16-18	-200-1-6ST
1/4	7/16-20	-400-1-4ST
1/4	9/16-18	-400-1-6ST
1/4	3/4-16	-400-1-8ST
1/4	7/8-14	-400-1-10ST
5/16	1/2-20	-500-1-5ST
3/8	7/16-20	-600-1-4ST
3/8	9/16-18	-600-1-6ST
3/8	3/4-16	-600-1-8ST
3/8	7/8-14	-600-1-10ST
1/2	9/16-18	-810-1-6ST
1/2	3/4-16	-810-1-8ST
1/2	7/8-14	-810-1-10ST
1/2	1 1/16-12	-810-1-12ST
5/8	3/4-16	-1010-1-8ST
5/8	7/8-14	-1010-1-10ST
3/4	3/4-16	-1210-1-8ST
3/4	1 1/16-12	-1210-1-12ST
7/8	1 3/16-12	-1410-1-14ST
1	1 1/16-12	-1610-1-12ST
1	1 5/16-12	-1610-1-16ST
1 1/4	1 5/8-12	-2000-1-20ST
1 1/2	1 7/8-12	-2400-1-24ST
2	2 1/2-12	-3200-1-32ST
* Add "SS" prefix to Basic Part No. for type 316 Stainless Steel		

Swagelok® to Male SAE/MS Straight Thread, Long Adapter		
Tube OD (in.)	SAE/MS Thread Size (in.)	Swagelok® Basic Part Number *
1/4	7/16-20	-400-1L-4ST
5/16	½-20	-500-1L-5ST
3/8	9/16-18	-600-1L-6ST
1/2	3/4-16	-810-1L-8ST
5/8	7/8-14	-1010-1L-10ST
3/4	1 1/16-12	-1210-1L-12ST
7/8	1 3/16-12	-1410-1L-14ST
1	1 5/16-12	-1610-1L-16ST
1 1/4	1 5/8-12	-2000-1L-20ST
1 1/2	1 7/8-12	-2400-1L-24ST
2	2 1/2-12	-3200-1L-32ST
* Add "SS" prefix to Basic Part No. for type 316 Stainless Steel		

RELEASED - Printed documents may be obsolete; validate prior to use.

Swagelok® to Male NPT Elbow, 90°		
Tube OD (in.)	NPT Nom. Pipe Size (in.)	Swagelok® Basic Part Number *
1/16	1/16	-100-2-1
1/16	1/8	-100-2-2
1/8	1/16	-200-2-1
1/8	1/8	-200-2-2
1/8	1/4	-200-2-4
3/16	1/8	-300-2-2
3/16	1/4	-300-2-4
1/4	1/16	-400-2-1
1/4	1/8	-400-2-2
1/4	1/4	-400-2-4
1/4	3/8	-400-2-6
1/4	1/2	-400-2-8
5/16	1/8	-500-2-2
5/16	1/4	-500-2-4
5/16	3/8	-500-2-6
3/8	1/8	-600-2-2
3/8	1/4	-600-2-4
3/8	3/8	-600-2-6
3/8	1/2	-600-2-8
3/8	3/4	-600-2-12
1/2	1/4	-810-2-4
1/2	3/8	-810-2-6
1/2	1/2	-810-2-8
1/2	3/4	-810-2-12
5/8	3/8	-1010-2-6
5/8	1/2	-1010-2-8
5/8	3/4	-1010-2-12
3/4	1/2	-1210-2-8
3/4	3/4	-1210-2-12
7/8	3/4	-1410-2-12
1	3/4	-1610-2-12
1	1	-1610-2-16
1 1/4	1 1/4	-2000-2-20
1 1/2	1 1/2	-2400-2-24
2	2	-3200-2-32
* Add "SS" prefix to Basic Part No. for type 316 Stainless Steel		

Metric Swagelok® to Male NPT Elbow, 90°		
Tube OD (mm)	NPT Nom. Pipe Size (in.)	Swagelok® Basic Part Number *
3	1/8	-3MO-2-2
3	1/4	-3MO-2-4
4	1/8	-4MO-2-2
4	1/4	-4MO-2-4
6	1/8	-6MO-2-2
6	1/4	-6MO-2-4
6	3/8	-6MO-2-6
6	1/2	-6MO-2-8
8	1/8	-8MO-2-2
8	1/4	-8MO-2-4
8	3/8	-8MO-2-6
8	1/2	-8MO-2-8
10	1/8	-10MO-2-2
10	1/4	-10MO-2-4
10	3/8	-10MO-2-6
10	1/2	-10MO-2-8
12	1/4	-12MO-2-4
12	3/8	-12MO-2-6
12	1/2	-12MO-2-8
12	3/4	-12MO-2-12
15	1/2	-15MO-2-8
16	3/8	-16MO-2-6
16	1/2	-16MO-2-8
16	3/4	-16MO-2-12
18	1/2	-18MO-2-8
18	3/4	-18MO-2-12
20	1/2	-20MO-2-8
20	3/4	-20MO-2-12
22	3/4	-22MO-2-12
22	1	-22MO-2-16
25	3/4	-25MO-2-12
25	1	-25MO-2-16
32	1 1/4	-32MO-2-20
38	1 1/2	-38MO-2-24
* Add "SS" prefix to Basic Part No. for type 316 Stainless Steel		

RELEASED - Printed documents may be obsolete; validate prior to use.

Swagelok® to Male NPT Elbow, 45°		
Tube OD (in.)	NPT Nom. Pipe Size (in.)	Swagelok® Basic Part Number *
1/4	1/8	-400-5-2
1/4	1/4	-400-5-4
3/8	1/8	-600-5-2
3/8	1/4	-600-5-4
3/8	3/8	-600-5-6
1/2	3/8	-810-5-6
1/2	1/2	-810-5-8
3/4	3/4	-1210-5-12
1	1	-1610-5-16
* Add "SS" prefix to Basic Part No. for type 316 Stainless Steel		

Swagelok® to Male SAE/MS Straight Thread Positionable Elbow, 45°		
Tube OD (in.)	SAE/MS Thread Size (in.)	Swagelok® Basic Part Number *
1/4	7/16-20	-400-5-4ST
3/8	9/16-18	-600-5-6ST
1/2	3/4-16	-810-5-8ST
3/4	1 1/16-12	-1210-5-12ST
1	1 5/16-12	-1610-5-16ST
* Add "SS" prefix to Basic Part No. for type 316 Stainless Steel		

Swagelok® to Male SAE/MS Straight Thread Positionable Elbow, 90°		
Tube OD (in.)	SAE/MS Thread Size (in.)	Swagelok® Basic Part Number *
1/4	7/16-20	-400-2-4ST
1/4	9/16-18	-400-2-6ST
5/16	1/2-20	-500-2-5ST
3/8	9/16-18	-600-2-6ST
* Add "SS" prefix to Basic Part No. for type 316 Stainless Steel		

Swagelok® to Male SAE/MS Straight Thread Positionable Elbow, 90° (Continued)		
Tube OD (in.)	SAE/MS Thread Size (in.)	Swagelok® Basic Part Number *
3/8	3/4-16	-600-2-8ST
1/2	3/4-16	-810-2-8ST
5/8	7/8-14	-1010-2-10ST
3/4	1 1/16-12	-1210-2-12ST
7/8	1 3/16-12	-1410-2-14ST
1	1 5/16-12	-1610-2-16ST
1 1/4	1 5/8-12	-2000-2-20ST
1 1/2	1 7/18-12	-2400-2-24ST
2	2 1/2-12	-3200-2-32ST
* Add "SS" prefix to Basic Part No. for type 316 Stainless Steel		

Swagelok® to Male NPT on Branch Tee		
Tube OD (in.)	NPT Nom. Pipe Size (in.)	Swagelok® Basic Part Number *
1/8	1/8	-200-3TTM
1/8	1/4	-200-3-4TTM
3/16	1/8	-300-3TTM
1/4	1/8	-400-3TTM
1/4	1/4	-400-3-4TTM
5/16	1/8	-500-3TTM
3/8	1/4	-600-3TTM
3/8	3/8	-600-3-6TTM
1/2	3/8	-810-3TTM
1/2	1/2	-810-3-8TTM
5/8	1/2	-1010-3TTM
3/4	3/4	-1210-3TTM
* Add "SS" prefix to Basic Part No. for type 316 Stainless Steel		

Metric Swagelok® to Male NPT on Branch Tee		
Tube OD (mm)	NPT Nom. Pipe Size (in.)	Swagelok® Basic Part Number *
6	1/8	-6MO-3TTM
8	1/8	-8MO-3TTM
10	1/4	-10MO-3TTM
12	3/8	-12MO-3TTM
16	1/2	-16MO-3TTM
* Add "SS" prefix to Basic Part No. for type 316 Stainless Steel		

Metric Swagelok® to Male NPT on Run Tee		
Tube OD (mm)	NPT Nom. Pipe Size (in.)	Swagelok® Basic Part Number *
6	1/8	-6MO-3TMT
6	1/4	-6MO-3-4TMT
8	1/4	-8MO-3-4TMT
12	1/4	-12MO-3-4TMT
12	1/2	-12MO-3-8TMT
16	1/2	-16MO-3TMT
* Add "SS" prefix to Basic Part No. for type 316 Stainless Steel		

Swagelok® to Male NPT on Run Tee		
Tube OD (in.)	NPT Nom. Pipe Size (in.)	Swagelok® Basic Part Number *
1/8	1/8	-200-3TMT
1/8	1/4	-200-3-4TMT
3/16	1/8	-300-3TMT
1/4	1/8	-400-3TMT
1/4	1/4	-400-3-4TMT
5/16	1/8	-500-3TMT
3/8	1/4	-600-3TMT
3/8	3/8	-600-3-6TMT
1/2	3/8	-810-3TMT
1/2	1/2	-810-3-8TMT
5/8	1/2	-1010-3TMT
3/4	3/4	-1210-3TMT
* Add "SS" prefix to Basic Part No. for type 316 Stainless Steel		

Swagelok® to SAE/MS Straight Thread on Run Tee, Positionable		
Tube OD (in.)	SAE/MS Thread Size (in.)	Swagelok® Basic Part Number *
1/4	7/16-20	-400-3TST
3/8	9/16-18	-600-3TST
1/2	3/4-16	-810-3TST
3/4	1 1/16-12	-1210-3TST
1	1 5/16-12	-1610-3TST
1 1/4	1 5/8-12	-2000-3TST
1 1/2	1 7/8-12	-2400-3TST
2	2 1/2-12	-3200-3TST
* Add "SS" prefix to Basic Part No. for type 316 Stainless Steel		

RELEASED - Printed documents may be obsolete; validate prior to use.

Swagelok® to Male SAE/MS Straight Thread on Branch Tee, Positionable		
Tube OD (in.)	SAE/MS Thread Size (in.)	Swagelok® Basic Part Number *
1/4	7/16-20	-400-3TTS
3/8	9/16-18	-600-3TTS
1/2	3/4-16	-810-3TTS
3/4	1 1/16-12	-1210-3TTS
1	1 5/16-12	-1610-3TTS
1 1/4	1 5/8-12	-2000-3TTS
1 1/2	1 7/8-12	-2400-3TTS
2	2 1/2-12	-3200-3TTS
* Add "SS" prefix to Basic Part No. for type 316 Stainless Steel		

Swagelok® to Female NPT Adapter		
Tube OD (in.)	NPT Nom. Pipe Size (in.)	Swagelok® Basic Part Number *
1/16	1/16	-100-7-1
1/16	1/8	-100-7-2
1/8	1/8	-200-7-2
1/8	1/4	-200-7-4
3/16	1/8	-300-7-2
1/4	1/8	-400-7-2
1/4	1/4	-400-7-4
1/4	3/8	-400-7-6
1/4	1/2	-400-7-8
5/16	1/8	-500-7-2
5/16	1/4	-500-7-4
3/8	1/8	-600-7-2
3/8	1/4	-600-7-4
3/8	3/8	-600-7-6
3/8	1/2	-600-7-8
3/8	3/4	-600-7-12
1/2	1/4	-810-7-4
1/2	3/8	-810-7-6
1/2	1/2	-810-7-8
1/2	3/4	-810-7-12
* Add "SS" prefix to Basic Part No. for type 316 Stainless Steel		

Swagelok® to Female NPT Adapter (Continued)		
Tube OD (in.)	NPT Nom. Pipe Size (in.)	Swagelok® Basic Part Number *
5/8	3/8	-1010-7-6
5/8	1/2	-1010-7-8
5/8	3/4	-1010-7-12
3/4	1/2	-1210-7-8
3/4	3/4	-1210-7-12
7/8	3/4	-1410-7-12
1	3/4	-1610-7-12
1	1	-1610-7-16
1 1/4	1 1/4	-2000-7-20
1 1/2	1 1/2	-2400-7-24
2	2	-3200-7-32
* Add "SS" prefix to Basic Part No. for type 316 Stainless Steel		

Swagelok® to Female NPT Bulkhead Adapter		
Tube OD (in.)	NPT Nom. Pipe Size (in.)	Swagelok® Basic Part Number *
1/8	1/8	-200-71-2
1/4	1/8	-400-71-2
1/4	1/4	-400-71-4
3/8	1/4	-600-71-4
1/2	3/8	-810-71-6
1/2	1/2	-810-71-8
* Add "SS" prefix to Basic Part No. for type 316 Stainless Steel		

Metric Swagelok® to Female NPT Bulkhead Adapter		
Tube OD (mm)	NPT Nom. Pipe Size (in.)	Swagelok® Basic Part Number *
6	1/4	-6MO-71-4
12	1/2	-12MO-71-8
* Add "SS" prefix to Basic Part No. for type 316 Stainless Steel		

RELEASED - Printed documents may be obsolete; validate prior to use.

Swagelok® to Female NPT Elbow, 90°		
Tube OD (in.)	NPT Nom. Pipe Size (in.)	Swagelok® Basic Part Number *
1/8	1/8	-200-8-2
1/8	1/4	-200-8-4
3/16	1/8	-300-8-2
1/4	1/8	-400-8-2
1/4	1/4	-400-8-4
1/4	3/8	-400-8-6
1/4	1/2	-400-8-8
5/16	1/8	-500-8-2
5/16	1/4	-500-8-4
3/8	1/8	-600-8-2
3/8	1/4	-600-8-4
3/8	3/8	-600-8-6
3/8	1/2	-600-8-8
1/2	1/4	-810-8-4
1/2	3/8	-810-8-6
1/2	1/2	-810-8-8
5/8	3/8	-1010-8-6
5/8	1/2	-1010-8-8
3/4	1/2	-1210-8-8
3/4	3/4	-1210-8-12
7/8	3/4	-1410-8-12
1	3/4	-1610-8-12
1	1	-1610-8-16
* Add "SS" prefix to Basic Part No. for type 316 Stainless Steel		

Metric Swagelok® to Female NPT Elbow, 90°		
Tube OD (mm)	NPT Nom. Pipe Size (in.)	Swagelok® Basic Part Number *
6	1/8	-6MO-8-2
6	1/4	-6MO-8-4
6	1/2	-6MO-8-8
8	1/4	-8MO-8-4
10	1/8	-10MO-8-2
* Add "SS" prefix to Basic Part No. for type 316 Stainless Steel		

Metric Swagelok® to Female NPT Elbow, 90° (Continued)		
Tube OD (mm)	NPT Nom. Pipe Size (in.)	Swagelok® Basic Part Number *
10	1/4	-10MO-8-4
12	1/4	-12MO-8-4
12	1/2	-12MO-8-8
16	1/2	-16MO-8-8
* Add "SS" prefix to Basic Part No. for type 316 Stainless Steel		

Swagelok® to Female NPT on Run Tee		
Tube OD (in.)	NPT Nom. Pipe Size (in.)	Swagelok® Basic Part Number *
1/8	1/8	-200-3TFT
1/4	1/8	-400-3TFT
1/4	1/4	-400-3-4TFT
3/8	1/4	-600-3TFT
1/2	3/8	-810-3TFT
1/2	1/2	-810-3-8TFT
3/4	3/4	-1210-3TFT
1	3/4	-1610-3-12TFT
1	1	-1610-3TFT
* Add "SS" prefix to Basic Part No. for type 316 Stainless Steel		

RELEASED - Printed documents may be obsolete; validate prior to use.

Metric Swagelok® to Female NPT on Run Tee		
Tube OD (mm)	NPT Nom. Pipe Size (in.)	Swagelok® Basic Part Number *
6	1/8	-6MO-3TFT
6	1/4	-6MO-3-4TFT
8	1/8	-8MO-3TFT
8	1/4	-8MO-3-4TFT
10	1/4	-10MO-3TFT
12	3/8	-12MO-3TFT
12	1/4	-12MO-3-4TFT
16	1/2	-16MO-3TFT
* Add "SS" prefix to Basic Part No. for type 316 Stainless Steel		

Metric Swagelok® to Female NPT on Branch Tee		
Tube OD (mm)	NPT Nom. Pipe Size (in.)	Swagelok® Basic Part Number *
6	1/8	-6MO-3TTF
6	1/4	-6MO-3-4TTF
8	1/8	-8MO-3TTF
8	1/4	-8MO-3-4TTF
10	1/4	-10MO-3TTF
12	3/8	-12MO-3TTF
12	1/4	-12MO-3-4TTF
16	1/2	-16MO-3TTF
* Add "SS" prefix to Basic Part No. for type 316 Stainless Steel		

Swagelok® to Female NPT on Branch Tee		
Tube OD (in.)	NPT Nom. Pipe Size (in.)	Swagelok® Basic Part Number *
1/8	1/8	-200-3TTF
1/4	1/8	-400-3TTF
1/4	1/4	-400-3-4TTF
3/8	1/4	-600-3TTF
3/8	3/8	-600-3-6TTF
3/8	1/2	-600-3-8TTF
1/2	1/4	-810-3-4TTF
1/2	3/8	-810-3TTF
1/2	1/2	-810-3-8TTF
5/8	1/2	-1010-3TTF
3/4	3/4	-1210-3TTF
1	3/4	-1610-3-12TTF
1	1	-1610-3TTF
* Add "SS" prefix to Basic Part No. for type 316 Stainless Steel		

Swagelok® Union	
Tube OD (in.)	Swagelok® Basic Part Number *
1/16	-100-6
1/8	-200-6
3/16	-300-6
1/4	-400-6
5/16	-500-6
3/8	-600-6
1/2	-810-6
5/8	-1010-6
3/4	-1210-6
7/8	-1410-6
1	-1610-6
1 1/4	-2000-6
1 1/2	-2400-6
2	-3200-6
* Add "SS" prefix to Basic Part No. for type 316 Stainless Steel	

RELEASED - Printed documents may be obsolete; validate prior to use.

Metric Swagelok® to Swagelok® Union		
Metric Tube OD (mm)	Fractional Tube OD (in.)	Swagelok® Basic Part Number *
2	1/8	-2MO-6-2
2	1/4	-2MO-6-4
3	1/8	-3MO-6-2
4	1/8	-4MO-6-2
4	1/4	-4MO-6-4
6	1/8	-6MO-6-2
6	1/4	-6MO-6-4
6	5/16	-6MO-6-5
8	1/4	-8MO-6-4
8	3/8	-8MO-6-6
10	1/8	-10MO-6-2
10	1/4	-10MO-6-4
10	5/16	-10MO-6-5
10	3/8	-10MO-6-6
12	5/16	-12MO-6-5
12	3/8	-12MO-6-6
12	1/2	-12MO-6-8
15	1/2	-15MO-6-8
16	5/8	-16MO-6-10
18	3/4	-18MO-6-12
20	1/2	-20MO-6-8
20	1	-20MO-6-16
25	1	-25MO-6-16
* Add "SS" prefix to Basic Part No. for type 316 Stainless Steel		

Metric Swagelok® Union	
Tube OD (mm)	Swagelok® Basic Part Number *
2	-2MO-6
3	-3MO-6
4	-4MO-6
6	-6MO-6
8	-8MO-6
10	-10MO-6
12	-12MO-6
14	-14MO-6
15	-15MO-6
16	-16MO-6
18	-18MO-6
20	-20MO-6
22	-22MO-6
25	-25MO-6
28	-28MO-6
32	-32MO-6
38	-38MO-6
* Add "SS" prefix to Basic Part No. for type 316 Stainless Steel	

RELEASED - Printed documents may be obsolete; validate prior to use.

Swagelok® Reducing Union		
Tube OD (in.)	Reduced Tube OD (in.)	Swagelok® Basic Part Number *
1/8	1/16	-200-6-1
3/16	1/16	-300-6-1
3/16	1/8	-300-6-2
1/4	1/16	-400-6-1
1/4	1/8	-400-6-2
1/4	3/16	-400-6-3
5/16	1/8	-500-6-2
5/16	1/4	-500-6-4
3/8	1/16	-600-6-1
3/8	1/8	-600-6-2
3/8	1/4	-600-6-4
3/8	5/16	-600-6-5
1/2	1/8	-810-6-2
1/2	1/4	-810-6-4
1/2	3/8	-810-6-6
5/8	3/8	-1010-6-6
5/8	1/2	-1010-6-8
3/4	1/4	-1210-6-4
3/4	3/8	-1210-6-6
3/4	1/2	-1210-6-8
3/4	5/8	-1210-6-10
1	1/2	-1610-6-8
1	3/4	-1610-6-12
* Add "SS" prefix to Basic Part No. for type 316 Stainless Steel		

Metric Swagelok® Reducing Union		
Tube OD (mm)	Reduced Tube OD (mm)	Swagelok® Basic Part Number *
3	2	-3MO-6-2M
6	2	-6MO-6-2M
6	3	-6MO-6-3M
6	4	-6MO-6-4M
8	6	-8MO-6-6M
* Add "SS" prefix to Basic Part No. for type 316 Stainless Steel		

Metric Swagelok® Reducing Union (Continued)		
Tube OD (mm)	Reduced Tube OD (mm)	Swagelok® Basic Part Number *
10	6	-110MO-6-6M
10	8	-10MO-6-8M
12	6	-12MO-6-6M
12	8	-12MO-6-8M
12	10	-12MO-6-10M
16	10	-16MO-6-10M
16	12	-16MO-6-12M
18	12	-18MO-6-12M
25	18	-25MO-6-18M
25	20	-25MO-6-20M
* Add "SS" prefix to Basic Part No. for type 316 Stainless Steel		

Swagelok® Bulkhead Union	
Tube OD (in.)	Swagelok® Basic Part Number *
1/16	-100-61
1/8	-200-61
3/16	-300-61
1/4	-400-61
5/16	-500-61
3/8	-600-61
1/2	-810-61
5/8	-1010-61
3/4	-1210-61
1	-1610-61
1 1/4	-2000-61
1 1/2	-2400-61
2	-3200-61
* Add "SS" prefix to Basic Part No. for type 316 Stainless Steel	

RELEASED - Printed documents may be obsolete; validate prior to use.

Metric Swagelok® Bulkhead Union	
Tube OD (mm)	Swagelok® Basic Part Number *
3	-3MO-61
4	-4MO-61
6	-6MO-61
8	-8MO-61
10	-10MO-61
12	-12MO-61
14	-14MO-61
15	-15MO-61
16	-16MO-61
18	-18MO-61
20	-20MO-61
32	-32MO-61
38	-38MO-61
* Add "SS" prefix to Basic Part No. for type 316 Stainless Steel	

Swagelok ® Bulkhead Reducing Union		
Tube OD (in.)	Reduced Tube OD (in.)	Swagelok® Basic Part Number *
1/4	1/8	-400-61-2
3/8	1/4	-600-61-4
1/2	1/4	-810-61-4
* Add "SS" prefix to Basic Part No. for type 316 Stainless Steel		

Swagelok® Union Elbow, 90°	
Tube OD (in.)	Swagelok® Basic Part Number *
1/16	-100-9
1/8	-200-9
3/16	-300-9
1/4	-400-9
5/16	-500-9
3/8	-600-9
1/2	-810-9
* Add "SS" prefix to Basic Part No. for type 316 Stainless Steel	

Swagelok® Union Elbow, 90° (Continued)	
Tube OD (in.)	Swagelok® Basic Part Number *
5/8	-1010-9
3/4	-1210-9
7/8	-1410-9
1	-1610-9
1 1/4	-2000-9
1 1/2	-2400-9
2	-3200-9
* Add "SS" prefix to Basic Part No. for type 316 Stainless Steel	

Metric Swagelok® Union Elbow, 90°	
Tube OD (mm)	Swagelok® Basic Part Number *
3	-3MO-9
4	-4MO-9
6	-6MO-9
8	-8MO-9
10	-10MO-9
12	-12MO-9
14	-14MO-9
15	-15MO-9
16	-16MO-9
18	-18MO-9
20	-20MO-9
22	-22MO-9
25	-25MO-9
28	-28MO-9
32	-32MO-9
38	-38MO-9
* Add "SS" prefix to Basic Part No. for type 316 Stainless Steel	

Swagelok® Union Tee	
Tube OD (in.)	Swagelok® Basic Part Number *
1/16	-100-3
1/8	-200-3
3/16	-300-3
1/4	-400-3
5/16	-500-3
3/8	-600-3
1/2	-810-3
5/8	-1010-3
3/4	-1210-3
7/8	-1410-3
1	-1610-3
1 1/4	-2000-3
1 1/2	-2400-3
2	-3200-3
* Add "SS" prefix to Basic Part No. for type 316 Stainless Steel	

Metric Swagelok® Union Tee	
Tube OD (mm)	Swagelok® Basic Part Number *
2	-2MO-3
3	-3MO-3
4	-4MO-3
6	-6MO-3
8	-8MO-3
10	-10MO-3
12	-12MO-3
14	-14MO-3
15	-15MO-3
16	-16MO-3
18	-18MO-3
20	-20MO-3
22	-22MO-3
* Add "SS" prefix to Basic Part No. for type 316 Stainless Steel	

Metric Swagelok® Union Tee (Continued)	
Tube OD (mm)	Swagelok® Basic Part Number *
25	-25MO-3
28	-28MO-3
32	-32MO-3
38	-38MO-3
* Add "SS" prefix to Basic Part No. for type 316 Stainless Steel	

Swagelok® Reducing on Branch Union Tee		
Tube OD (in.)	Reduced Tube OD (in.)	Swagelok® Basic Part Number *
3/8	1/4	-600-3-6-4
1/2	1/4	-810-3-8-4
1/2	3/8	-810-3-8-6
5/8	3/8	-1010-3-10-6
3/4	3/8	-1210-3-12-6
3/4	1/2	-1210-3-12-8
1	3/8	-1610-3-16-6
1	1/2	-1610-3-16-8
1	3/4	-1610-3-16-12
1 1/4	1	-2000-3-20-16
1 1/2	1	-2400-3-24-16
2	1	-3200-3-32-16
* Add "SS" prefix to Basic Part No. for type 316 Stainless Steel		

Swagelok® Reducing on Run Union Tees		
Tube OD (in.)	Reduced Tube OD (in.)	Swagelok® Basic Part Number *
3/8	1/4	-600-3-4-6
* Add "SS" prefix to Basic Part No. for type 316 Stainless Steel		

RELEASED - Printed documents may be obsolete; validate prior to use.

Swagelok® Reducing on Run and Branch Union Tee		
Tube OD (in.)	Reduced Run & Branch Tube OD (in.)	Swagelok® Basic Part Number *
1/2	3/8	-810-3-6-6
5/8	3/8	-1010-3-6-6
3/4	3/8	-1210-3-6-6
* Add "SS" prefix to Basic Part No. for type 316 Stainless Steel		

Swagelok® Reducing on Run and Branch Union Tee			
Tube OD (in.)	Reduced Run Tube OD (in.)	Reduced Branch Tube OD (in.)	Swagelok® Basic Part Number *
5/8	1/2	3/8	-1010-3-8-6
3/4	1/2	3/8	-1210-3-8-6
1	3/4	3/8	-1610-3-12-6
* Add "SS" prefix to Basic Part No. for type 316 Stainless Steel			

Swagelok® Union Cross	
Tube OD (in.)	Swagelok® Basic Part Number *
1/8	-200-4
1/4	-400-4
5/16	-500-4
3/8	-600-4
1/2	-810-4
3/4	-1210-4
1	-1610-4
* Add "SS" prefix to Basic Part No. for type 316 Stainless Steel	

Metric Swagelok® Union Cross	
Tube OD (mm)	Swagelok® Basic Part Number *
3	-3MO-4
6	-6MO-4
8	-8MO-4
10	-10MO-4
12	-12MO-4
16	-16MO-4
18	-18MO-4
20	-20MO-4
25	-25MO-4
* Add "SS" prefix to Basic Part No. for type 316 Stainless Steel	

Swagelok® to Male SAE/MS Flared End Union		
Tube OD (in.)	Flared Tube Nom. Size (in.)	Swagelok® Basic Part Number *
1/16	1/8	-100-6-2AN
1/8	1/8	-200-6-2AN
1/8	1/4	-200-6-4AN
1/4	1/4	-400-6-4AN
5/16	5/16	-500-6-5AN
3/8	1/4	-600-6-4AN
3/8	3/8	-600-6-6AN
1/2	1/2	-810-6-8AN
3/4	3/4	-1210-6-12AN
1	1	-1610-6-16AN
* Add "SS" prefix to Basic Part No. for type 316 Stainless Steel		

Swagelok® to Male SAE/MS Flared End Bulkhead Union		
Tube OD (in.)	Flared Tube Nom. Size (in.)	Swagelok® Basic Part Number *
1/4	1/4	-400-61-4AN
3/8	3/8	-600-61-6AN
1/2	1/2	-810-61-8AN
3/4	3/4	-1210-61-12AN
1	1	-1610-61-16AN
* Add "SS" prefix to Basic Part No. for type 316 Stainless Steel		

Swagelok® to Swagelok® Tube End Reducer		
Tube OD (in.)	Swaged Tube End OD (in.)	Swagelok® Basic Part Number *
1/16	1/8	-100-R-2
1/16	1/4	-100-R-4
1/8	1/16	-200-R-1
1/8	1/8	-200-R-2
1/8	3/16	-200-R-3
1/8	1/4	-200-R-4
1/8	3/8	-200-R-6
1/8	1/2	-200-R-8
3/16	1/8	-300-R-2
3/16	1/4	-300-R-4
1/4	1/8	-400-R-2
1/4	3/16	-400-R-3
1/4	1/4	-400-R-4
1/4	5/16	-400-R-5
1/4	3/8	-400-R-6
1/4	1/2	-400-R-8
1/4	5/8	-400-R-10
1/4	3/4	-400-R-12
5/16	3/8	-500-R-6
* Add "SS" prefix to Basic Part No. for type 316 Stainless Steel # Ordered part comes with pre-swaged nuts and ferrules on the tube end		

Swagelok® to Swagelok® Tube End Reducer (Continued)		
Tube OD (in.)	Swaged Tube End OD (in.)	Swagelok® Basic Part Number *
5/16	1/2	-500-R-8
3/8	1/4	-600-R-4
3/8	3/8	-600-R-6
3/8	1/2	-600-R-8
3/8	5/8	-600-R-10
3/8	3/4	-600-R-12
1/2	1/4	-810-R-4
1/2	3/8	-810-R-6
1/2	1/2	-810-R-8
1/2	5/8	-810-R-10
1/2	3/4	-810-R-12
1/2	1	-810-R-16
5/8	3/4	-1010-R-12
5/8	7/8	-1010-R-14
5/8	1	-1010-R-16
3/4	1/2	-1210-R-8
3/4	1	-1210-R-16
1	1 1/4	-1610-R-20 #
1	1 1/2	-1610-R-24 #
1	2	-1610-R-32 #
1 1/4	1 1/2	-2000-R-24 #
1 1/4	2	-2000-R-32 #
1 1/2	2	-2400-R-32 #
* Add "SS" prefix to Basic Part No. for type 316 Stainless Steel # Ordered part comes with pre-swaged nuts and ferrules on the tube end		

Swagelok® to Swagelok® Tube End Long Reducer		
Tube OD (in.)	Swaged Tube End OD (in.)	Swagelok® Basic Part Number *
3/8	1/2	-600-RF-8
* Add "SS" prefix to Basic Part No. for type 316 Stainless Steel		

Metric Swagelok® to Metric Swagelok® Tube End Reducer		
Tube OD (mm)	Swaged Tube End OD (mm)	Swagelok® Basic Part Number *
2	3	-2MO-R-3M
3	4	-3MO-R-4M
3	6	-3MO-R-6M
3	10	-3MO-R-10M
4	6	-4MO-R-6M
6	3	-6MO-R-3M
6	8	-6MO-R-8M
6	10	-6MO-R-10M
6	12	-6MO-R-12M
6	18	-6MO-R-18M
8	6	-8MO-R-6M
8	10	-8MO-R-10M
8	12	-8MO-R-12M
10	6	-10MO-R-6M
10	8	-10MO-R-8M
10	12	-10MO-R-12M
10	15	-10MO-R-15M
10	18	-10MO-R-18M
12	6	-12MO-R-6M
12	8	-12MO-R-8M
12	10	-12MO-R-10M
12	16	-12MO-R-16M
12	18	-12MO-R-18M
12	20	-12MO-R-20M
12	22	-12MO-R-22M
12	25	-12MO-R-25M
16	12	-16MO-R-12M
18	12	-18MO-R-12M
18	16	-18MO-R-16M
18	20	-18MO-R-20M
18	22	-18MO-R-22M
18	25	-18MO-R-25M
20	16	-20MO-R-16M
20	18	-20MO-R-18M
* Add "SS" prefix to Basic Part No. for type 316 Stainless Steel		

Metric Swagelok® to Metric Swagelok® Tube End Reducer (Continued)		
Tube OD (mm)	Swaged Tube End OD (mm)	Swagelok® Basic Part Number *
20	22	-20MO-R-22M
20	25	-20MO-R-25M
22	18	-22MO-R-18M
22	20	-22MO-R-20M
22	25	-22MO-R-25M
25	18	-25MO-R-18M
25	20	-25MO-R-20M
* Add "SS" prefix to Basic Part No. for type 316 Stainless Steel		

Metric Swagelok® to Swagelok® Tube End Reducer		
Tube OD (mm)	Swaged Tube End OD (in.)	Swagelok® Basic Part Number *
2	1/8	-2MO-R-2
3	1/8	-3MO-R-2
3	1/4	-3MO-R-4
4	1/4	-4MO-R-4
6	1/8	-6MO-R-2
6	1/4	-6MO-R-4
6	5/16	-6MO-R-5
6	3/8	-6MO-R-6
6	1/2	-6MO-R-8
8	3/8	-8MO-R-6
8	1/2	-8MO-R-8
10	3/8	-10MO-R-6
10	1/2	-10MO-R-8
12	1/2	-12MO-R-8
12	3/4	-12MO-R-12
18	3/4	-18MO-R-12
18	1	-18MO-R-16
25	1	-25MO-R-16
* Add "SS" prefix to Basic Part No. for type 316 Stainless Steel		

RELEASED - Printed documents may be obsolete; validate prior to use.

Swagelok® to Swagelok® Tube End Bulkhead Reducer	
Tube OD (in.)	Swagelok® Basic Part Number *
1/8	-200-R1-2
1/4	-400-R1-4
3/8	-600-R1-6
1/2	-810-R1-8
5/8	-1010-R1-10
1	-1610-R1-16
* Add "SS" prefix to Basic Part No. for type 316 Stainless Steel	

Swagelok® Tube End to Swagelok® Integral Ferrule Tube End Connector	
Tube OD (in.)	Swagelok® Basic Part Number *
1/16	-101-PC
1/8	-201-PC
1/4	-401-PC
5/16	-501-PC
3/8	-601-PC
1/2	-811-PC
3/4	-1211-PC
1	-1611-PC
* Add "SS" prefix to Basic Part No. for type 316 Stainless Steel	

Metric Swagelok® Tube End to Metric Swagelok® Integral Ferrule Tube End Connector	
Tube OD (mm)	Swagelok® Basic Part Number *
3	-3M1-PC
6	-6M1-PC
8	-8M1-PC
10	-10M1-PC
12	-12M1-PC
15	-15M1-PC
16	-16M1-PC
18	-18M1-PC
20	-20M1-PC
25	-25M1-PC
28	-28MO-PC #
32	-32MO-PC #
38	-38MO-PC #
* Add "SS" prefix to Basic Part No. for type 316 Stainless Steel # Ordered part includes nuts & ferrules	

Swagelok® Integral Ferrule Tube End to Reducing Swagelok® Tube End Connector		
Tube OD (in.)	Reduced Tube OD (in.)	Swagelok® Basic Part Number *
1/8	1/16	-201-PC-1
1/4	1/16	-401-PC-1
1/4	1/8	-401-PC-2
3/8	1/8	-601-PC-2
3/8	1/4	-601-PC-4
1/2	1/4	-811-PC-4
1/2	3/8	-811-PC-6
3/4	1/2	-1211-PC-8
1	1/2	-1611-PC-8
1	3/4	-1611-PC-12
* Add "SS" prefix to Basic Part No. for type 316 Stainless Steel		

Metric Swagelok® Integral Ferrule Tube End to Reducing Metric Swagelok® Tube End Connector		
Tube OD (mm)	Reduced Tube OD (mm)	Swagelok® Basic Part Number *
6	3	-6M1-PC-3M
8	6	-8M1-PC-6M
10	6	-10M1-PC-6M
10	8	-10M1-PC-8M
12	6	-12M1-PC-6M
12	8	-12M1-PC-8M
12	10	-12M1-PC-10M
16	12	-16M1-PC-12M
28	25	-28M1-PC-25M
32	25	-32M1-PC-25M
38	25	-38M1-PC-25M
* Add "SS" prefix to Basic Part No. for type 316 Stainless Steel		

Swagelok® Cap	
Tube OD (in.)	Swagelok® Basic Part Number *
1/16	-100-C
1/8	-200-C
3/16	-300-C
1/4	-400-C
5/16	-500-C
3/8	-600-C
1/2	-810-C
5/8	-1010-C
3/4	-1210-C
7/8	-1410-C
1	-1610-C
1 1/4	-2000-C
1 1/2	-2400-C
2	-3200-C
* Add "SS" prefix to Basic Part No. for type 316 Stainless Steel	

Metric Swagelok® Cap	
Tube OD (mm)	Swagelok® Basic Part Number *
2	-2MO-C
3	-3MO-C
4	-4MO-C
6	-6MO-C
8	-8MO-C
10	-10MO-C
12	-12MO-C
14	-14MO-C
15	-15MO-C
16	-16MO-C
18	-18MO-C
20	-20MO-C
22	-22MO-C
25	-25MO-C
28	-28MO-C
32	-32MO-C
38	-38MO-C
* Add "SS" prefix to Basic Part No. for type 316 Stainless Steel	

Swagelok® Plug	
Tube OD (in.)	Swagelok® Basic Part Number *
1/16	-100-P
1/8	-200-P
3/16	-300-P
1/4	-400-P
5/16	-500-P
3/8	-600-P
1/2	-810-P
5/8	-1010-P
3/4	-1210-P
7/8	-1410-P
1	-1610-P
1 1/4	-2000-P
* Add "SS" prefix to Basic Part No. for type 316 Stainless Steel	

Swagelok® Plug (Continued)	
Tube OD (in.)	Swagelok® Basic Part Number *
1 1/2	-2400-P
2	-3200-P
* Add "SS" prefix to Basic Part No. for type 316 Stainless Steel	

Metric Swagelok® Plug	
Tube OD (mm)	Swagelok® Basic Part Number *
2	-2MO-P
3	-3MO-P
4	-4MO-P
6	-6MO-P
8	-8MO-P
10	-10MO-P
12	-12MO-P
15	-15MO-P
16	-16MO-P
18	-18MO-P
20	-20MO-P
22	-22MO-P
25	-25MO-P
28	-28MO-P
32	-32MO-P
38	-38MO-P
* Add "SS" prefix to Basic Part No. for type 316 Stainless Steel	

Swagelok® Low Dead Volume Union	
Tube OD (in.)	Swagelok® Basic Part Number *
1/16	-1F0-6GC
* Add "SS" prefix to Basic Part No. for type 316 Stainless Steel	

Swagelok® Low Dead Volume Union Tee	
Tube OD (in.)	Swagelok® Basic Part Number *
1/16	-1F0-3GC
* Add "SS" prefix to Basic Part No. for type 316 Stainless Steel	

Swagelok® Female Column End Fitting Union		
Tube OD (in.)	Sample End Tube OD (in.)	Swagelok® Basic Part Number *
1/4	1/16	-400-6-1FGC
3/8	1/16	-600-6-1FGC
* Add "SS" prefix to Basic Part No. for type 316 Stainless Steel		

Swagelok® Low and Zero Volume Reducing Union		
Tube OD (in.)	Sample End Tube OD (in.)	Swagelok® Basic Part Number *
1/8	1/16	SS-200-6-1ZV
1/4	1/16	SS-400-6-1ZV
3/8	1/16	SS-600-6-1ZV
1/2	1/16	SS-810-6-1ZV
1/8	1/16	SS-200-6-1LV
1/4	1/16	SS-400-6-1LV
3/8	1/16	SS-600-6-1LV
* Standard part is made of type 304 or 316 Stainless Steel		

Swagelok® Tube Fitting with Integral ANSI (Raised Face) Flange		
Tube OD	Swagelok® Basic Part Number	ANSI Flange Class *
1/2”	SS-8F0-F8-150	150
	SS-8F0-F8-300	300
10mm	SS-10MF0-F8-150	150
	SS-10MF0-F8-300	300
12mm	SS-12MF0-F8-150	150
	SS-12MF0-F8-300	300
* Special Order to have Concentric 90° V-Groove Serrations in Flange Face per MSS SP-6 if connected pipe system flanges are required to have this design feature		

Swagelok® Vent Protector (Mud Dauber Fitting)	
Thread Size (in.)	Swagelok® Basic Part Number *
1/4	MS-MD-4M
3/8	MS-MD-6M
1/2	MS-MD-8M
3/4	MS-MD-12M
* Standard part is made of type 304 or 316 Stainless Steel	

Swagelok® Tube End to Male NPT Adapter		
Tube OD (in.)	NPT Nom. Pipe Size (in.)	Swagelok® Basic Part Number *
1/8	1/8	-2-TA-1-2
1/8	1/4	-2-TA-1-4
3/16	1/8	-3-TA-1-2
* Add “SS” prefix to Basic Part No. for type 316 Stainless Steel # Ordered part comes assembled with nuts and ferrules		

Swagelok® Tube End to Male NPT Adapter (Continued)		
Tube OD (in.)	NPT Nom. Pipe Size (in.)	Swagelok® Basic Part Number *
3/16	1/4	-3-TA-1-4
1/4	1/8	-4-TA-1-2
1/4	1/4	-4-TA-1-4
1/4	3/8	-4-TA-1-6
1/4	1/2	-4-TA-1-8
5/16	1/8	-5-TA-1-2
5/16	1/4	-5-TA-1-4
3/8	1/8	-6-TA-1-2
3/8	1/4	-6-TA-1-4
3/8	3/8	-6-TA-1-6
3/8	1/2	-6-TA-1-8
1/2	1/4	-8-TA-1-4
1/2	3/8	-8-TA-1-6
1/2	1/2	-8-TA-1-8
5/8	1/2	-10-TA-1-8
3/4	1/2	-12-TA-1-8
3/4	3/4	-12-TA-1-12
1	3/4	-16-TA-1-12
1	1	-16-TA-1-16
1 1/4	1 1/4	-20-TA-1-20 #
1 1/2	1 1/2	-24-TA-1-24 #
2	2	-32-TA-1-32 #
* Add “SS” prefix to Basic Part No. for type 316 Stainless Steel # Ordered part comes assembled with nuts and ferrules		

Metric Swagelok® Tube End to Male NPT Adapter		
Tube OD (mm)	NPT Nom. Pipe Size (in.)	Swagelok® Basic Part Number *
6	1/8	-6-MTA-1-2
6	1/4	-6-MTA-1-4
8	1/4	-8-MTA-1-4
10	1/4	-10-MTA-1-4
10	3/8	-10-MTA-1-6
10	1/2	-10-MTA-1-8
12	1/4	-12-MTA-1-4
12	1/2	-12-MTA-1-8
28	1	-28-MTA-1-16 #
28	1 1/4	-28-MTA-1-20 #
32	1 1/4	-32-MTA-1-20 #
38	1 1/2	-38-MTA-1-24 #
* Add "SS" prefix to Basic Part No. for type 316 Stainless Steel # Ordered part comes assembled with nuts and ferrules		

Swagelok® to Male SAE/MS Straight Thread Adapter		
Tube OD (in.)	SAE/MS Thread Size (in.)	Swagelok® Basic Part Number *
1/8	5/16-24	-2-TA-1-2ST
1/4	7/16-20	-4-TA-1-4ST
3/8	7/16-20	-6-TA-1-4ST
3/8	9/16-18	-6-TA-1-6ST
3/8	3/4-16	-6-TA-1-8ST
1/2	9/16-18	-8-TA-1-6ST
1/2	3/4-16	-8-TA-1-8ST
5/8	7/8-14	-10-TA-1-10ST
3/4	1 1/16-12	-12-TA-1-12ST
1	1 5/16-12	-16-TA-1-16ST
* Add "SS" prefix to Basic Part No. for type 316 Stainless Steel # Ordered part comes assembled with nuts and ferrules		

Swagelok® to Male SAE/MS Straight Thread Adapter (Continued)		
Tube OD (in.)	SAE/MS Thread Size (in.)	Swagelok® Basic Part Number *
1 1/4	1 5/8-12	-20-TA-1-20ST #
1 1/2	1 7/8-12	-24-TA-1-24ST #
2	2 1/2-12	-32-TA-1-32ST #
* Add "SS" prefix to Basic Part No. for type 316 Stainless Steel # Ordered part comes assembled with nuts and ferrules		

Swagelok® Tube End to Female NPT Adapter		
Tube OD (in.)	NPT Nom. Pipe Size (in.)	Swagelok® Basic Part Number *
1/8	1/8	-2-TA-7-2
1/8	1/4	-2-TA-7-4
3/16	1/4	-3-TA-7-4
1/4	1/8	-4-TA-7-2
1/4	1/4	-4-TA-7-4
1/4	3/8	-4-TA-7-6
1/4	1/2	-4-TA-7-8
5/16	1/4	-5-TA-7-4
3/8	1/8	-6-TA-7-2
3/8	1/4	-6-TA-7-4
3/8	3/8	-6-TA-7-6
3/8	1/2	-6-TA-7-8
1/2	1/4	-8-TA-7-4
1/2	3/8	-8-TA-7-6
1/2	1/2	-8-TA-7-8
5/8	1/2	-10-TA-7-8
3/4	1/2	-12-TA-7-8
3/4	3/4	-12-TA-7-12
3/4	1	-12-TA-7-16
* Add "SS" prefix to Basic Part No. for type 316 Stainless Steel # Ordered part comes with assembled nuts & ferrules		

Swagelok® Tube End to Female NPT Adapter (Continued)		
Tube OD (in.)	NPT Nom. Pipe Size (in.)	Swagelok® Basic Part Number *
1	3/4	-16-TA-7-12
1	1	-16-TA-7-16
1 1/4	1 1/4	-20-TA-7-20 #
1 1/2	1 1/2	-24-TA-7-24 #
2	2	-32-TA-7-32 #
* Add "SS" prefix to Basic Part No. for type 316 Stainless Steel # Ordered part comes with assembled nuts & ferrules		

Swagelok® Tube End to Male SAE/MS Flared End Adapter		
Tube OD (in.)	Flared Tube Size (in.)	Swagelok® Basic Part Number *
¼	1/4	-4-TA-1-4AN
3/8	1/4	-6-TA-1-4AN
3/8	3/8	-6-TA-1-6AN
½	1/2	-8-TA-1-8AN
¾	3/4	-12-TA-1-12AN
1	1	-16-TA-1-16AN
* Add "SS" prefix to Basic Part No. for type 316 Stainless Steel		

Metric Swagelok® Tube End to Female NPT Adapter		
Tube OD (mm)	NPT Nom. Pipe Size (in.)	Swagelok® Basic Part Number *
6	1/8	-6-MTA-7-2
6	1/4	-6-MTA-7-4
8	1/4	-8-MTA-7-4
10	1/4	-10-MTA-7-4
10	3/8	-10-MTA-7-6
10	1/2	-10-MTA-7-8
12	1/4	-12-MTA-7-4
12	1/2	-12-MTA-7-8
* Add "SS" prefix to Basic Part No. for type 316 Stainless Steel		

Swagelok® Tube End to Integral Sleeve Flared Tube End; Equipped with Ferrules & Tube Coupling Nuts		
Tube OD (in.)	Flared Tube Size (in.)	Swagelok® Basic Part Number *
1/8	1/8	-200-A-2ANF
1/8	1/4	-200-A-4ANF
1/4	1/4	-400-A-4ANF
3/8	3/8	-600-A-6ANF
1/2	1/2	-810-A-8ANF
* Add "SS" prefix to Basic Part No. for type 316 Stainless Steel		

RELEASED - Printed documents may be obsolete; validate prior to use.

Swagelok® Nut **	
Tube OD (in.)	Swagelok® Basic Part Number
1/16	-102-1
1/8	-202-1
3/16	-302-1
1/4	-402-1
5/16	-502-1
3/8	-602-1
1/2	-812-1
5/8	-1012-1
3/4	-1212-1
7/8	-1412-1
1	-1612-1
1 1/4	-2002-1
1 1/2	-2402-1
2	-3202-1

* Add "SS" prefix to Basic Part No. for type 316 Stainless Steel

** Knurled Nuts up to one (1) inch are available in the same sizes as shown for SWAGELOK Nuts. To order, add suffix **K** to part number.

Metric Swagelok® Nut **	
Tube OD (in.)	Swagelok® Basic Part Number *
2	-2M2-1
3	-3M2-1
4	-4M2-1
6	-6M2-1
8	-8M2-1
10	-10M2-1
12	-12M2-1
14	-14M2-1
15	-15M2-1
16	-16M2-1
18	-18M2-1
20	-20M2-1
22	-22M2-1
25	-25M2-1
28	-28M2-1
32	-32M2-1
38	-38M2-1

* Add "SS" prefix to Basic Part No. for type 316 Stainless Steel

** Knurled Nuts up to one (1) inch are available in the same sizes as shown for SWAGELOK Nuts. To order, add suffix **K** to part number.

Swagelok® Male Nut	
Tube OD (in.)	Swagelok® Basic Part Number *
1/16	-1F2-1GC
1/8	-2F2-1GC
1/4	-4F2-1
1/2	-8F2-1

* Add "SS" prefix to Basic Part No. for type 316 Stainless Steel

Metric Swagelok® Male Nut	
Tube OD (mm)	Swagelok® Basic Part Number *
10	-10MF2-1
12	-12MF2-1
* Add "SS" prefix to Basic Part No. for type 316 Stainless Steel	

Swagelok® Back Ferrule	
Tube OD (in.)	Swagelok® Basic Part Number *
1/16	-104-1
1/8	-204-1
3/16	-304-1
1/4	-404-1
5/16	-504-1
3/8	-604-1
1/2	-814-1
5/8	-1014-1
3/4	-1214-1
7/8	-1414-1
1	-1614-1
1 1/4	-2004-1 #
1 1/2	-2404-1 #
2	-3204-1 #
* Add "SS" prefix to Basic Part No. for type 316 Stainless Steel # Use silver coated ferrules for stainless steel tube & fittings	

Metric Swagelok® Back Ferrule	
Tube OD (mm)	Swagelok® Basic Part Number *
2	-2M4-1
3	-3M4-1
4	-4M4-1
6	-6M4-1
8	-8M4-1
10	-10M4-1
12	-12M4-1
14	-14M4-1
15	-15M4-1
16	-16M4-1
18	-18M4-1
20	-20M4-1
22	-22M4-1
25	-25M4-1
28	-28M4-1 #
32	-32M4-1 #
38	-38M4-1 #
* Add "SS" prefix to Basic Part No. for type 316 Stainless Steel # Use silver coated ferrules for stainless steel tube & fittings	

RELEASED - Printed documents may be obsolete; validate prior to use.

Swagelok® Front Ferrule	
Tube OD (in.)	Swagelok® Basic Part Number *
1/16	-103-1
1/8	-203-1
3/16	-303-1
1/4	-403-1
5/16	-503-1
3/8	-603-1
1/2	-813-1
5/8	-1013-1
3/4	-1213-1
7/8	-1413-1
1	-1613-1
1 1/4	-2003-1 #
1 1/2	-2403-1 #
2	-3203-1 #
* Add "SS" prefix to Basic Part No. for type 316 Stainless Steel # Use silver coated ferrules for stainless steel tube & fittings	

Metric Swagelok® Front Ferrule	
Tube OD (mm)	Swagelok® Basic Part Number *
2	-2M3-1
3	-3M3-1
4	-4M3-1
6	-6M3-1
8	-8M3-1
10	-10M3-1
12	-12M3-1
14	-14M3-1
15	-15M3-1
16	-16M3-1
18	-18M3-1
20	-20M3-1
22	-22M3-1
25	-25M3-1
28	-28M3-1 #
32	-32M3-1 #
38	-38M3-1 #
* Add "SS" prefix to Basic Part No. for type 316 Stainless Steel # Use silver coated ferrules for stainless steel tube & fittings	

RELEASED - Printed documents may be obsolete; validate prior to use.

Appendix D - Coned and Left Hand Threaded Tube & Tube Fittings

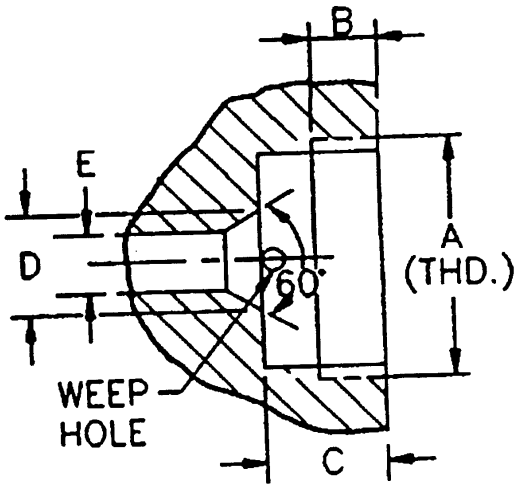

10,000 psi and 20,000 psi rated tube fittings

Tube OD	A Thread	B	C	D (Dia)	E (Dia) 20,000 psi	E (Dia) 10,000 psi
0.25	7/16 – 20	.28	.50	.19	.109	
0.375	9/16 – 18	.38	.62	.31	.203	
0.5625	13/16 – 16	.44	.75	.50	.312	.359
0.75	¾ - 14 NPSM	.50	.94	.62	.438	.516
1.00	1-3/8 - 12	.81	1.31	.88	.562	.688

40,000 psi and 60,000 psi rated tube fittings

Tube OD	A Thread	B	C	D (Dia.)	E (Dia) 60,000 psi	E (Dia) 40,000 psi
0.25	9/16 – 18	.38	.44	.17	.094	
0.375	3/4 – 16	.53	.62	.26	.125	
0.5625	1-1/8 – 12	.62	.75	.38	.188	.250

Figure D-1. Female End Connection Dimensions

Note: Dimensions are all in inches, shown for reference only, and should not be considered as actual machining dimensions.

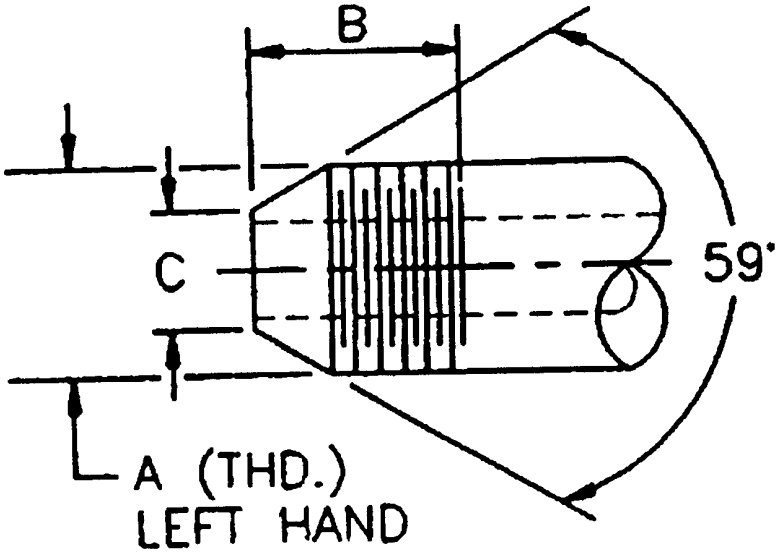

10,000 psi and 20,000 psi rated tubes

Tube OD	A Thread	B	C (Dia) 20,000 psi	C (Dia) 10,000 psi
0.25	1/4 – 28 L.H.	.34	.141	
0.375	3/8 – 24 L.H.	.44	.250	
0.5625	9/16 – 18 L.H.	.50	.406	.438
0.75	¾ - 16 L.H.	.62	.562	.578
1.00	1 – 14 L.H.	.78	.719	.812

40,000 psi and 60,000 psi rated tubes

Tube OD	A Thread	B	C (Dia) 60,000 psi	C (Dia) 40,000 psi
0.25	1/4 – 28 L.H.	.56	.125	
0.375	3/8 – 24 L.H.	.75	.219	
0.5625	9/16 – 18 L.H.	.94	.281	.312

Figure D-2. Tubing End Dimensions (inches)

Note: Dimensions are shown for reference only and should not be considered as actual machining dimensions.

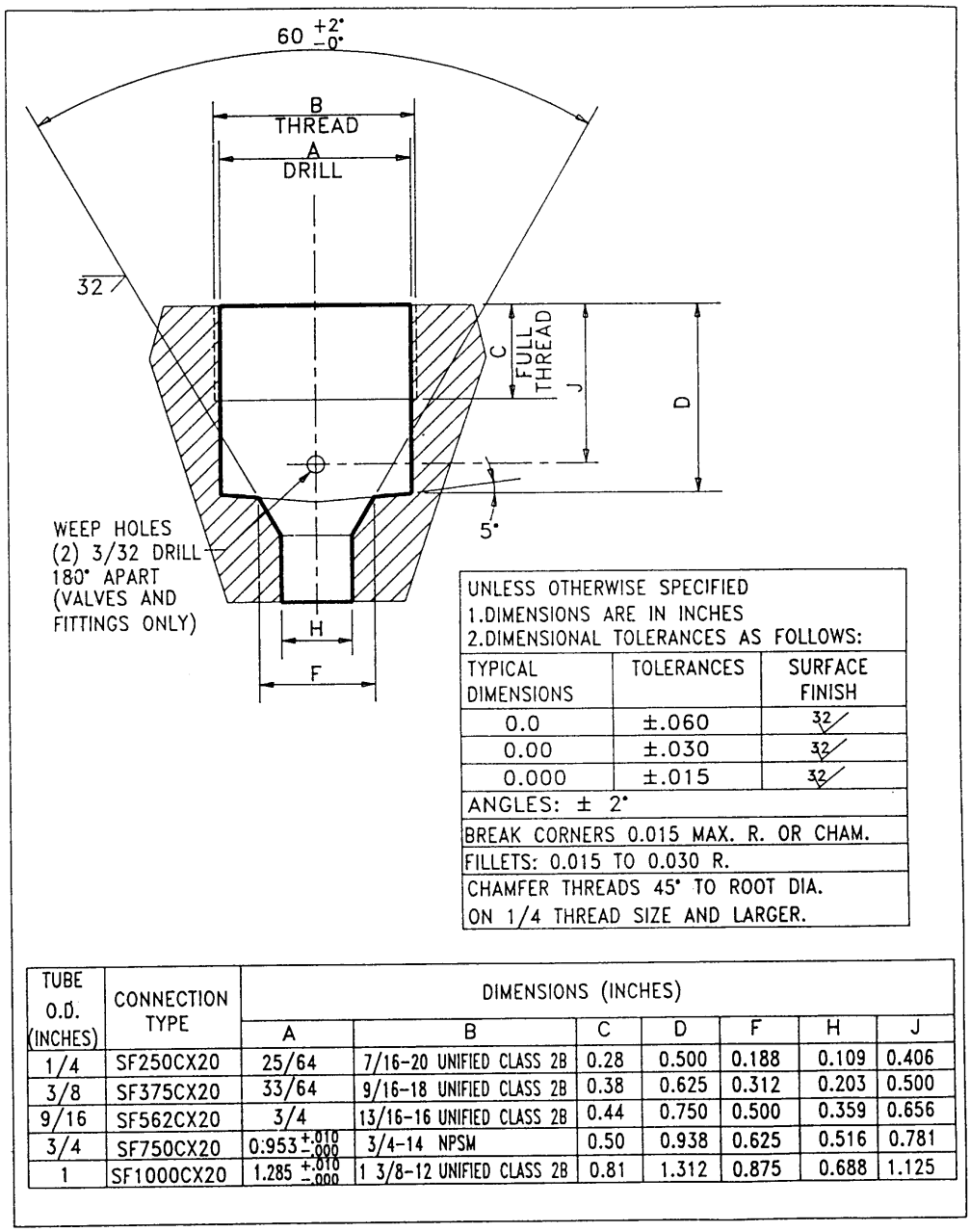

TUBE O.D. (INCHES)	CONNECTION TYPE	DIMENSIONS (INCHES)						
		A	B	C	D	F	H	J
1/4	SF250CX20	25/64	7/16-20 UNIFIED CLASS 2B	0.28	0.500	0.188	0.109	0.406
3/8	SF375CX20	33/64	9/16-18 UNIFIED CLASS 2B	0.38	0.625	0.312	0.203	0.500
9/16	SF562CX20	3/4	13/16-16 UNIFIED CLASS 2B	0.44	0.750	0.500	0.359	0.656
3/4	SF750CX20	0.953 +.010 −.000	3/4-14 NPSM	0.50	0.938	0.625	0.516	0.781
1	SF1000CX20	1.285 +.010 −.000	1 3/8-12 UNIFIED CLASS 2B	0.81	1.312	0.875	0.688	1.125

Figure D-3. **20,000 psi Rated Coned & Threaded Tube Fitting Female End Connection Details**

Appendix E - Coned and Left Hand Threaded Tube and Tube Fitting Manufacturers

Coned and Threaded Tube and Tube Fittings are produced by the manufacturers shown below. Use of tube and fittings produced by other manufactures requires an approved Variance or MUA.

AE:

Autoclave Engineers
2930 W. 22nd St., Box 5051
Erie, PA 16512-5051
(818) 838-5700
(800) 458-0409
Fax: (814) 833-0145

BuT:

BuTech Pressure Systems
4928 Pittsburgh Avenue
Erie, PA 16509
(814) 833-4904
Fax (814) 833-2612
e-mail: hq@butech-valve.com
http://www.butech-valve.com

HiP:

High Pressure Equipment Company
P.O. Box 8248
1222 Linden Avenue
Erie, PA 16505
(814) 838-2028
(800) 289-7447
Fax: (814) 838-6075
e-mail: sales@highpressure.com
http://www.highpressure.com

NSI:

Newport Scientific Inc. (formerly Aminco)
8246-E Sandy Court
Jessup, Maryland 20794
(301) 498-6700
Fax: (301) 490-2313

APPENDIX B

P&ID

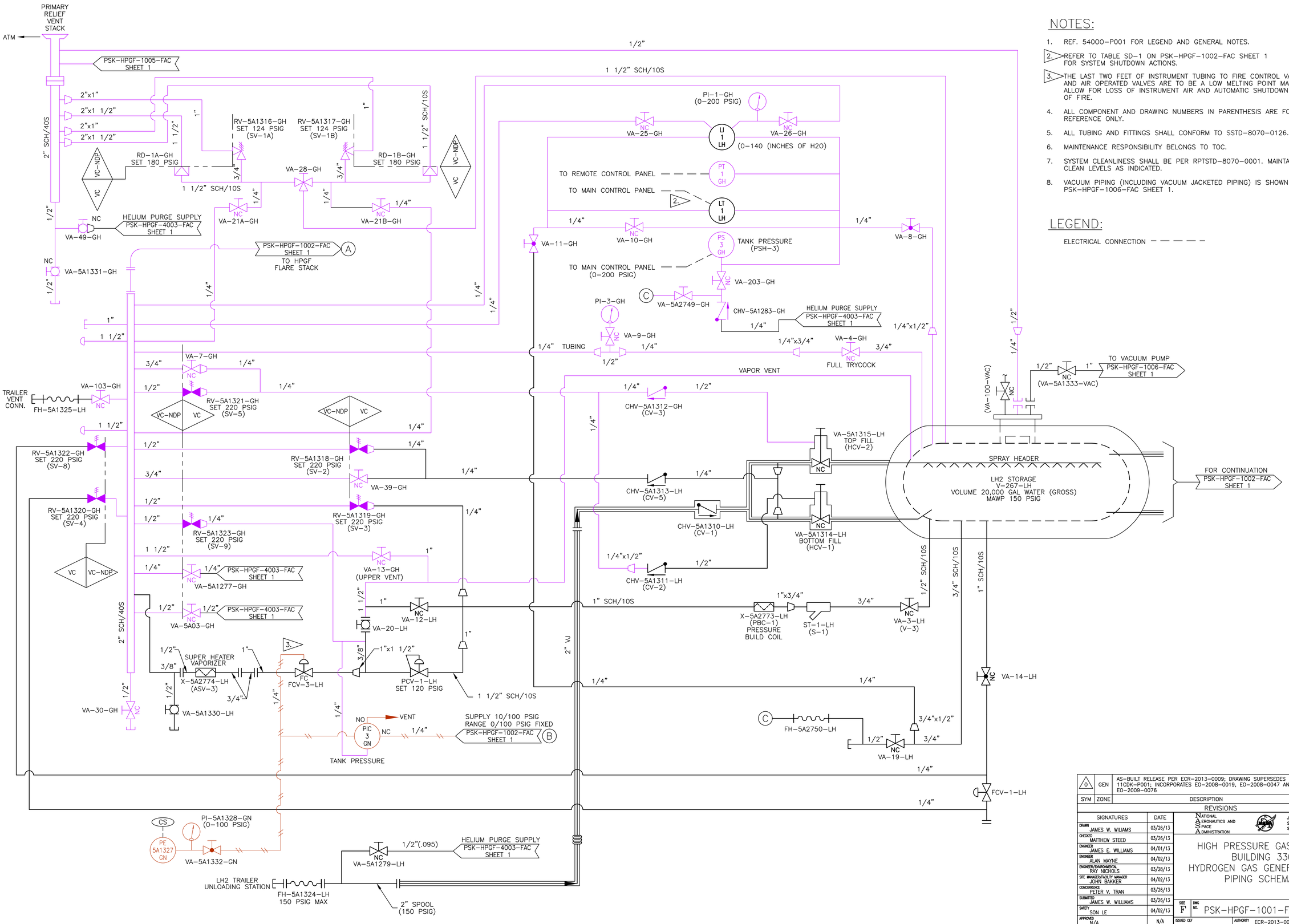

NOTES:

1. REF. 54000-P001 FOR LEGEND AND GENERAL NOTES.
2. REFER TO TABLE SD-1 ON PSK-HPGF-1002-FAC SHEET 1 FOR SYSTEM SHUTDOWN ACTIONS.
3. THE LAST TWO FEET OF INSTRUMENT TUBING TO FIRE CONTROL VALVES AND AIR OPERATED VALVES ARE TO BE A LOW MELTING POINT MATERIAL TO ALLOW FOR LOSS OF INSTRUMENT AIR AND AUTOMATIC SHUTDOWN IN CASE OF FIRE.
4. ALL COMPONENT AND DRAWING NUMBERS IN PARENTHESIS ARE FOR REFERENCE ONLY.
5. ALL TUBING AND FITTINGS SHALL CONFORM TO SSTD-8070-0126.
6. MAINTENANCE RESPONSIBILITY BELONGS TO TOC.
7. SYSTEM CLEANLINESS SHALL BE PER RPTSTD-8070-0001. MAINTAIN CLEAN LEVELS AS INDICATED.
8. VACUUM PIPING (INCLUDING VACUUM JACKETED PIPING) IS SHOWN ON DRAWING PSK-HPGF-1006-FAC SHEET 1.

LEGEND:

ELECTRICAL CONNECTION — — — — —

SYM	ZONE	DESCRIPTION	DATE	APPROVED
0	GEN	AS-BUILT RELEASE PER ECR-2013-0009; DRAWING SUPERSEDES 11CDK-P001; INCORPORATES EO-2008-0019, EO-2008-0047 AND EO-2009-0076	04/04/13	TS

REVISIONS

SIGNATURES	DATE
DRAWN JAMES W. WILIAMS	03/26/13
CHECKED MATTHEW STEED	03/26/13
ENGINEER JAMES E. WILLIAMS	04/01/13
ENGINEER ALAN MAYNE	04/02/13
ENGINEER/ENVIRONMENTAL RAY NICHOLS	03/28/13
SITE MANAGER/FACILITY MANAGER JOHN BAKKER	04/02/13
CONCURRENCE PETER V. TRAN	03/26/13
SUBMITTED JAMES W. WILLIAMS	03/26/13
SAFETY SON LE	04/02/13
APPROVED N/A	N/A

NATIONAL AERONAUTICS AND SPACE ADMINISTRATION

JOHN C. STENNIS SPACE CENTER SSC, MS 39529-6000

HIGH PRESSURE GAS FACILITY BUILDING 3305 HYDROGEN GAS GENERATOR AREA PIPING SCHEMATIC

SIZE F | DWG NO. PSK-HPGF-1001-FAC | SHT NO. | REV 0

ISSUED CEF | AUTHORITY ECR-2013-0009 | SHEET 1 OF 1

NOTES:

1. REFERENCE 54000-P001, FOR LEGEND AND GENERAL NOTES.
2. REFER TO TABLE SD-1 FOR SYSTEM SHUTDOWN ACTIONS.
3. THE LAST TWO FEET OF INSTRUMENT TUBING TO FIRE CONTROL VALVES AND AIR OPERATED VALVES ARE TO BE A LOW MELTING POINT MATERIAL TO ALLOW FOR LOSS OF INSTRUMENT AIR AND AUTOMATIC SHUTDOWN IN CASE OF FIRE.
4. TO MAIN CONTROL PANEL LOGIC LOW/LOW PRESSURE: 2000 PSIG (ADJUSTABLE)
5. TO MAIN CONTROL PANEL LOGIC LOW PRESSURE: 2200 PSIG, HIGH PRESSURE: 4000 PSIG (ADJUSTABLE).
6. ALL COMPONENT AND DRAWING NUMBERS IN PARENTHESIS ARE FOR REFERENCE ONLY.
7. ALL TUBING AND FITTINGS SHALL CONFORM TO SSTD-8070-0126.
8. MAINTENANCE RESPONSIBILITY BELONGS TO TOC.
9. SYSTEM CLEANLINESS SHALL BE PER RPTSTD-8070-0001. MAINTAIN CLEAN LEVELS AS INDICATED.
10. REFERENCE PSK-HPGF-1006-FAC SHEET 1 FOR VACUUM PIPING.
11. HELIUM PURGE CONNECTION FLOWS THROUGH VALVES, MV-5A1335-LH AND MV-5A1336-LH, THROUGH VAPOR RETURN LINES AND PURGES THE COLD ENDS OF THE PUMPS.

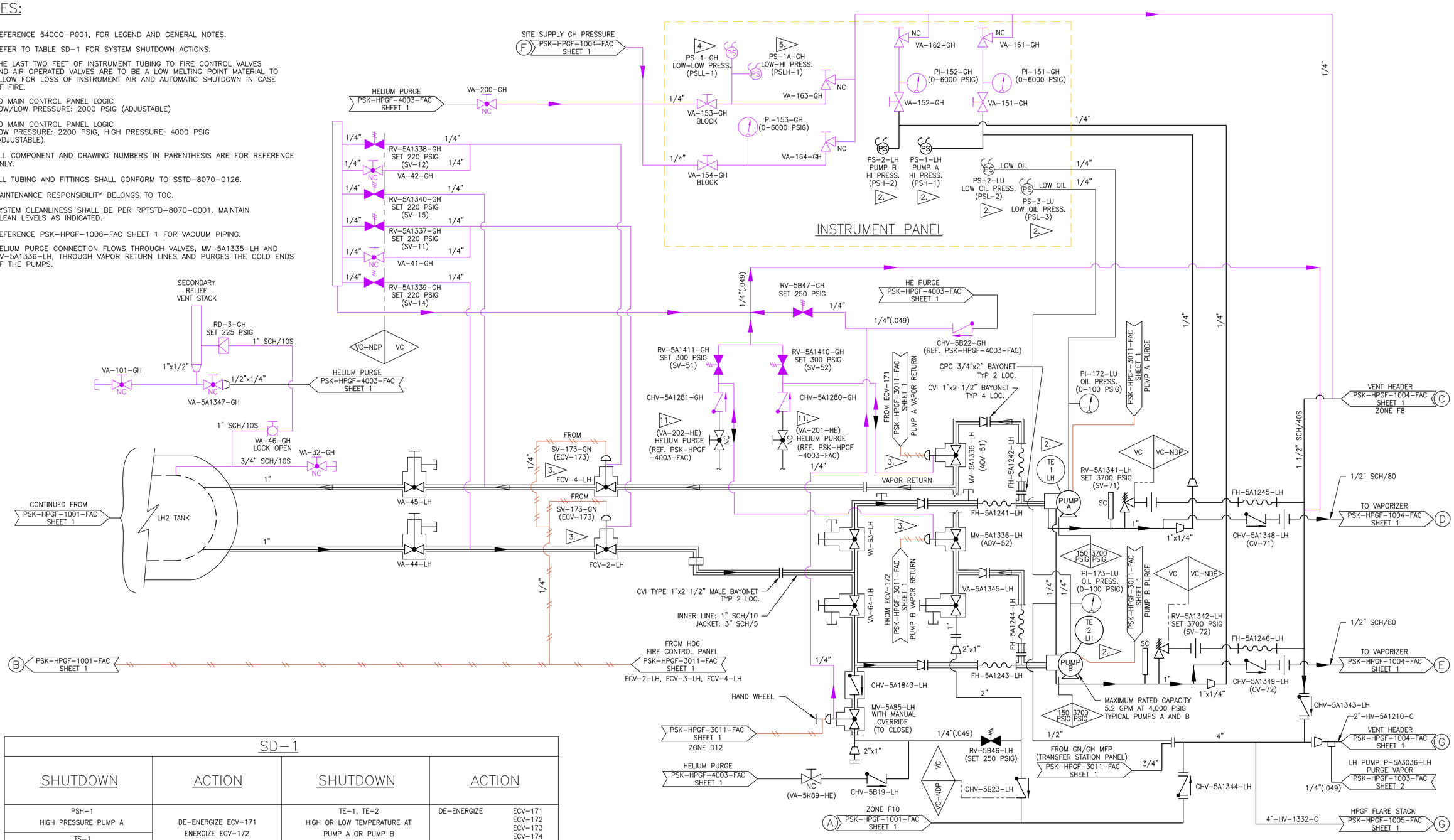

SD-1

SHUTDOWN	ACTION	SHUTDOWN	ACTION
PSH-1 HIGH PRESSURE PUMP A	DE-ENERGIZE ECV-171 ENERGIZE ECV-172 SHIFT OPERATION TO ALTERNATE PUMP LOCKOUT PUMP A	TE-1, TE-2 HIGH OR LOW TEMPERATURE AT PUMP A OR PUMP B	DE-ENERGIZE ECV-171 ECV-172 ECV-173 ECV-174 LOCKOUT SYSTEM
TS-1 LOW TEMP. PAST VAPORIZERS		LT-1 LOW LIQUID LEVEL IN TANK	
PSL-2 LOW OIL PRESSURE PUMP A		PSL-1 (REF PSK-HPGF-3011-FAC SHEET 1) LOSS OF INSTRUMENT AIR	DE-ENERGIZE ECV-171 ECV-172 ECV-173 LOCKOUT SYSTEM
PSH-2 HIGH PRESSURE PUMP B	DE-ENERGIZE ECV-172 ENERGIZE ECV-171 SHIFT OPERATION TO ALTERNATE PUMP LOCKOUT PUMP B		
TS-2 LOW TEMP. PAST VAPORIZERS		EMERGENCY STOP LOCATED AT LEAST 25' FROM INSTALLATION	DE-ENERGIZE ECV-171 ECV-172 ECV-173 ECV-174 LOCKOUT SYSTEM
PSL-3 LOW OIL PRESSURE PUMP B			

SYM	ZONE	DESCRIPTION	DATE	APPROVED
1	GEN	ENGINEERING RELEASE PER ECR-2013-0038	09/30/13	TS
0	GEN	AS-BUILT RELEASE PER ECR-2013-0009; DRAWING SUPERSEDES 11CDK-P002	04/04/13	TS

REVISIONS

SIGNATURES	DATE
DRAWN JAMES W. WILLIAMS	03/26/13
CHECKED MATTHEW STEED	03/26/13
ENGINEER JAMES E. WILLIAMS	04/01/13
ENGINEER ALAN MAYNE	04/02/13
ENGINEER/ENVIRONMENTAL RAY NICHOLS	03/28/13
SITE MANAGER/FACILITY MANAGER JOHN BAKKER	04/02/13
CONCURRENCE PETER V. TRAN	03/26/13
SUBMITTED JAMES W. WILLIAMS	03/26/13
SAFETY SON LE	04/02/13
APPROVED N/A	N/A

NATIONAL AERONAUTICS AND SPACE ADMINISTRATION

JOHN C. STENNIS SPACE CENTER SSC, MS 39529-6000

HIGH PRESSURE GAS FACILITY BUILDING 3305 HYDROGEN GAS GENERATOR AREA PIPING SCHEMATIC

SIZE F | DWG NO. PSK-HPGF-1002-FAC | SHT NO. | REV 1

ISSUED CEF | AUTHORITY ECR-2013-0009 | SHEET 1 OF 1

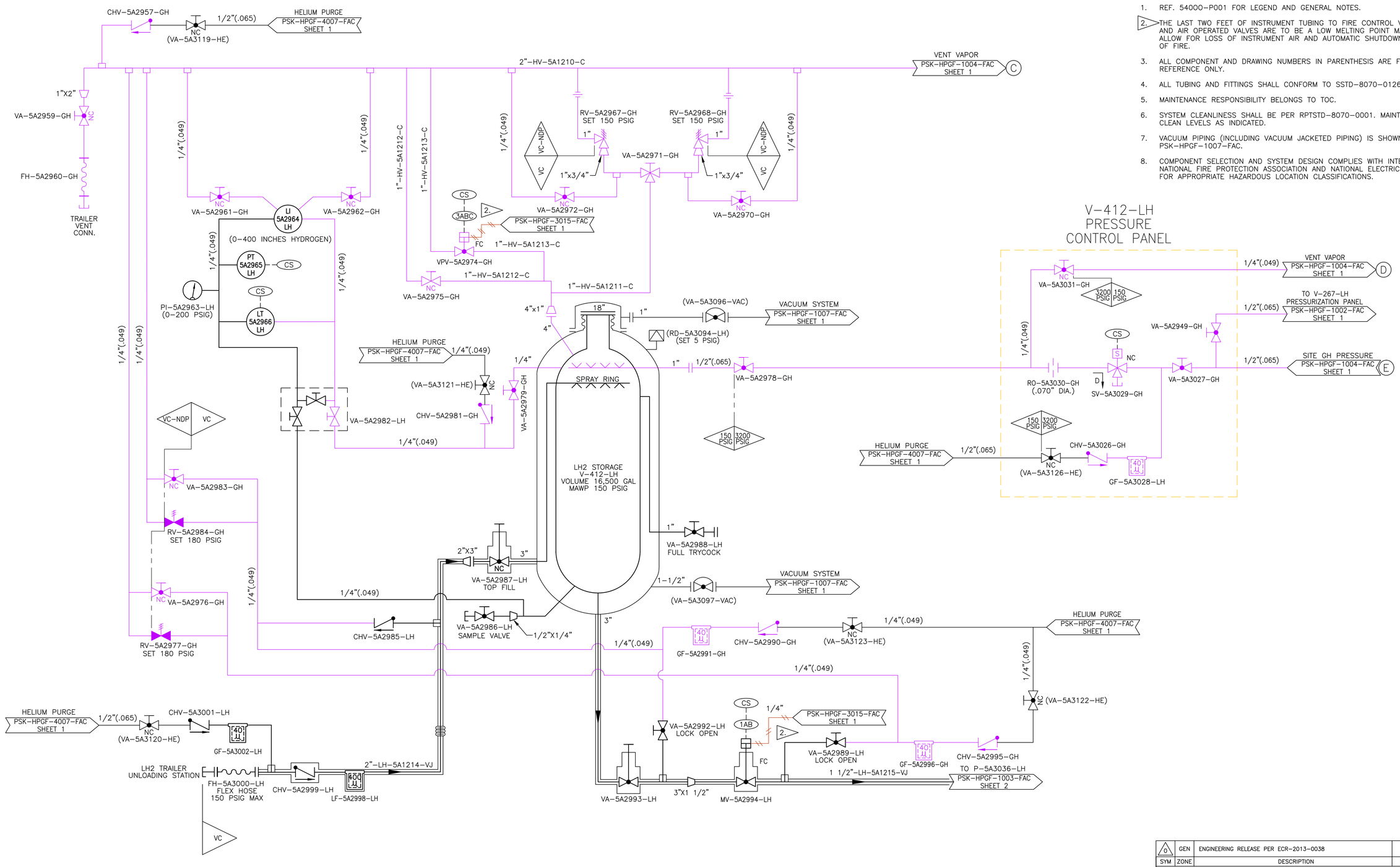

NOTES:

1. REF. 54000-P001 FOR LEGEND AND GENERAL NOTES.
2. THE LAST TWO FEET OF INSTRUMENT TUBING TO FIRE CONTROL VALVES AND AIR OPERATED VALVES ARE TO BE A LOW MELTING POINT MATERIAL TO ALLOW FOR LOSS OF INSTRUMENT AIR AND AUTOMATIC SHUTDOWN IN CASE OF FIRE.
3. ALL COMPONENT AND DRAWING NUMBERS IN PARENTHESIS ARE FOR REFERENCE ONLY.
4. ALL TUBING AND FITTINGS SHALL CONFORM TO SSTD-8070-0126.
5. MAINTENANCE RESPONSIBILITY BELONGS TO TOC.
6. SYSTEM CLEANLINESS SHALL BE PER RPTSTD-8070-0001. MAINTAIN CLEAN LEVELS AS INDICATED.
7. VACUUM PIPING (INCLUDING VACUUM JACKETED PIPING) IS SHOWN ON DRAWING PSK-HPGF-1007-FAC.
8. COMPONENT SELECTION AND SYSTEM DESIGN COMPLIES WITH INTENT OF NATIONAL FIRE PROTECTION ASSOCIATION AND NATIONAL ELECTRIC CODE FOR APPROPRIATE HAZARDOUS LOCATION CLASSIFICATIONS.

SYM	ZONE	DESCRIPTION	DATE	APPROVED
0	GEN	ENGINEERING RELEASE PER ECR-2013-0038		

REVISIONS

SIGNATURES	DATE
DRAWN	
CHECKED	
ENGINEER	
ENGINEER	
ENGINEER/ENVIRONMENTAL	
SITE MANAGER/FACILITY MANAGER	
CONCURRENCE	
SUBMITTED	
SAFETY	
APPROVED	

NATIONAL AERONAUTICS AND SPACE ADMINISTRATION

JOHN C. STENNIS SPACE CENTER
SSC, MS 39529-6000

HIGH PRESSURE GAS FACILITY
BUILDING 3305
HYDROGEN GAS GENERATOR AREA
PIPING SCHEMATIC

SIZE	DWG NO.	SHT NO.	REV
F	PSK-HPGF-1003-FAC		0

ISSUED CEF | AUTHORITY ECR-2013-0038 | SHEET 1 OF 2

NOTES:

1. REF. PSK-HPGF-1003-FAC-01 FOR NOTES.

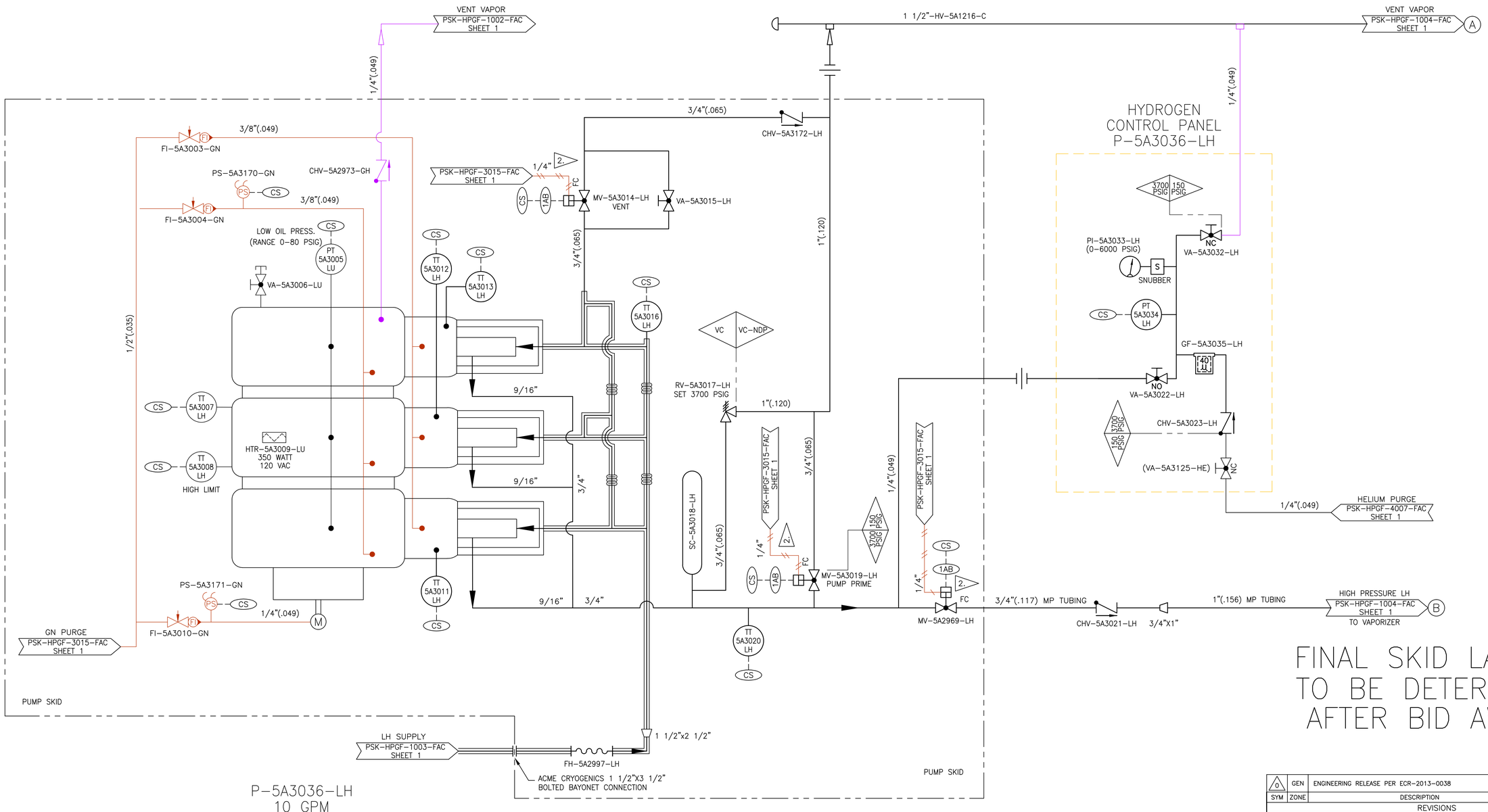

FINAL SKID LAYOUT
TO BE DETERMINED
AFTER BID AWARD

P-5A3036-LH
10 GPM
4500 PSIG
50 HP MOTOR

SYM	ZONE	DESCRIPTION	DATE	APPROVED
0	GEN	ENGINEERING RELEASE PER ECR-2013-0038	09/30/13	TS

REVISIONS

SIGNATURES	DATE
DRAWN JOHN PAZOS	09/23/13
CHECKED JAMES W. WILLIAMS	09/23/13
ENGINEER ANDREW BRACEY	09/23/13
ENGINEER N/A	N/A
ENGINEER/ENVIRONMENTAL RAY NICHOLS	09/23/13
SITE MANAGER/FACILITY MANAGER JOHN BAKKER	09/23/13
CONCURRENCE PETER V. TRAN	09/23/13
SUBMITTED JOHN PAZOS	09/23/13
SAFETY TRUC LE	09/23/13
APPROVED N/A	N/A

NATIONAL AERONAUTICS AND SPACE ADMINISTRATION

JOHN C. STENNIS SPACE CENTER
SSC, MS 39529-6000

HIGH PRESSURE GAS FACILITY
BUILDING 3305
HYDROGEN GAS GENERATOR AREA
PIPING SCHEMATIC

SIZE	DWG NO.	SHT NO.	REV
F	PSK-HPGF-1003-FAC		0

ISSUED CEF | AUTHORITY ECR-2013-0038 | SHEET 2 OF 2

NOTES:

1. REFERENCE 54000-P001, FOR LEGEND AND GENERAL NOTES.
2. SYSTEM CLEANLINESS SHALL BE PER RPTSTD-8070-0001. MAINTAIN CLEAN LEVELS AS INDICATED.
3. ALL TUBING AND FITTINGS SHALL CONFORM TO SSTD-8020-0126.
4. TEMPERATURE READOUT IN BUILDING 3305 CONTROL ROOM.
5. FLOW READOUT IN BUILDING 3305 CONTROL ROOM.
6. ALL COMPONENT AND DRAWING NUMBERS IN PARENTHESIS ARE FOR REFERENCE ONLY.
7. MAINTENANCE RESPONSIBILITY BELONGS TO TOC.

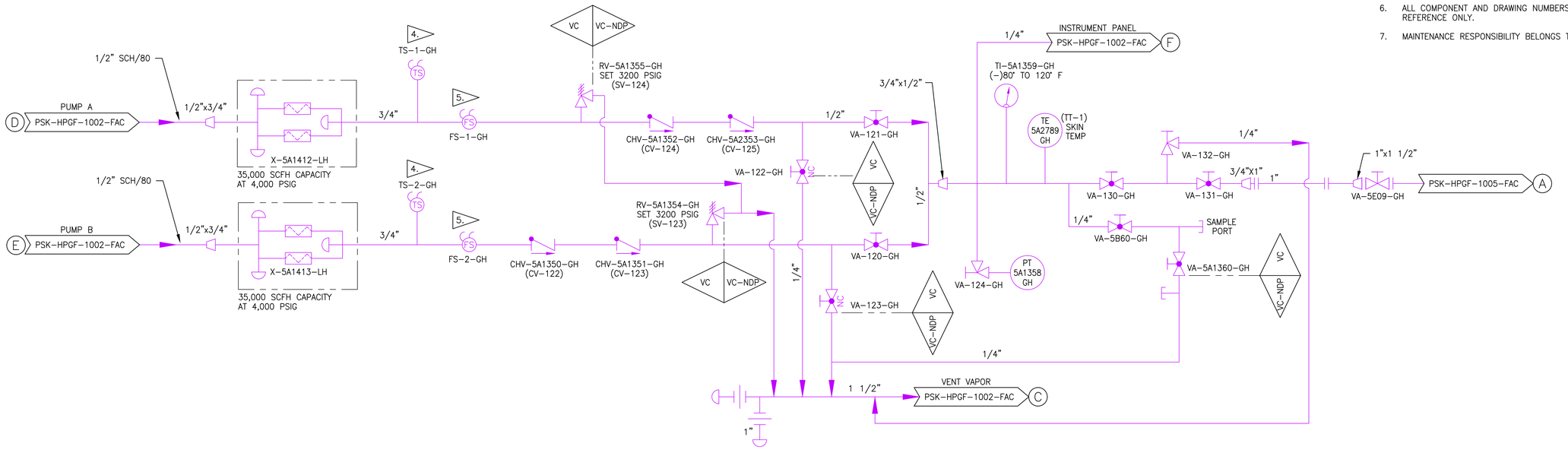

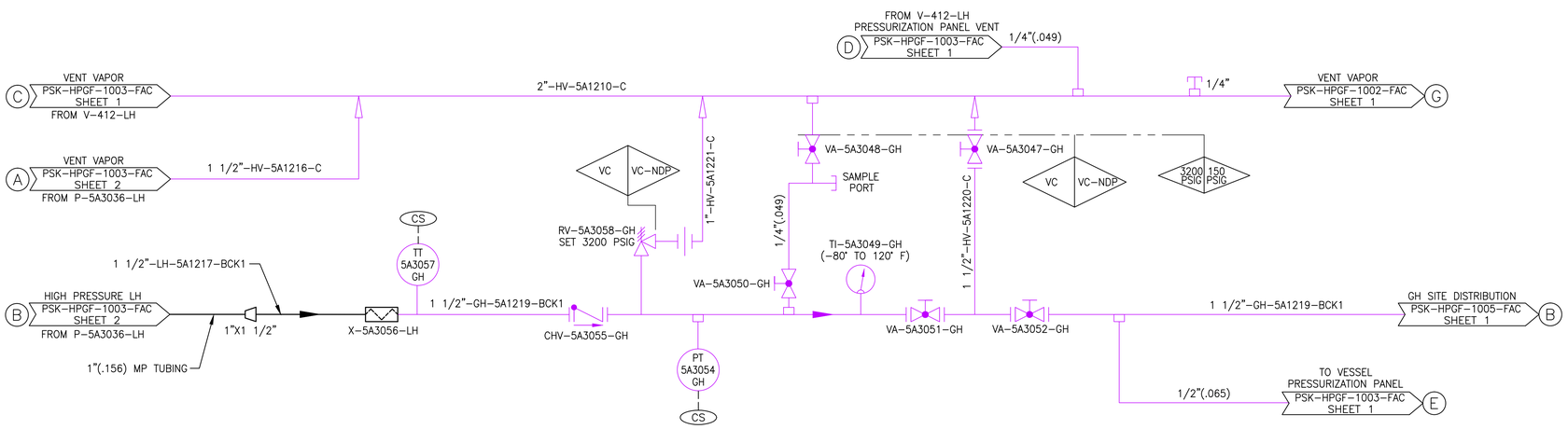

SYM	ZONE	DESCRIPTION	DATE	APPROVED
1	GEN	ENGINEERING RELEASE PER ECR-2013-0038	09/30/13	TS
0	GEN	AS-BUILT RELEASE PER ECR-2013-0009; DRAWING SUPERCEDES 11CDK-P003	04/04/13	TS

REVISIONS

SIGNATURES	DATE
DRAWN JAMES W. WILLIAMS	03/26/13
CHECKED MATTHEW STEED	03/26/13
ENGINEER JAMES E. WILLIAMS	04/01/13
ENGINEER ALAN MAYNE	04/02/13
ENGINEER/ENVIRONMENTAL RAY NICHOLS	03/28/13
SITE MANAGER/FACILITY MANAGER JOHN BAKKER	04/02/13
CONCURRENCE PETER V. TRAN	03/26/13
SUBMITTED JAMES W. WILLIAMS	03/26/13
SAFETY SON LE	04/02/13
APPROVED N/A	N/A

NATIONAL AERONAUTICS AND SPACE ADMINISTRATION

JOHN C. STENNIS SPACE CENTER SSC, MS 39529-6000

HIGH PRESSURE GAS FACILITY BUILDING 3305 HYDROGEN GAS GENERATOR AREA PIPING SCHEMATIC

SIZE F | DWG NO. PSK-HPGF-1004-FAC | SHT NO. | REV 1

ISSUED CEF | AUTHORITY ECR-2013-0009 | SHEET 1 OF 1

NOTES:

1. REFERENCE 54000-P001 FOR GENERAL NOTES AND LEGEND.
2. SYSTEM CLEANLINESS SHALL BE PER RPTSTD-8070-0001. MAINTAIN CLEAN LEVELS AS INDICATED.
3. ALL TUBING AND FITTINGS SHALL CONFORM TO SSTD-8070-0126.
4. MAINTENANCE RESPONSIBILITY BELONGS TO TOC.
5. ALL COMPONENT AND DRAWING NUMBERS IN PARENTHESIS ARE FOR REFERENCE ONLY.

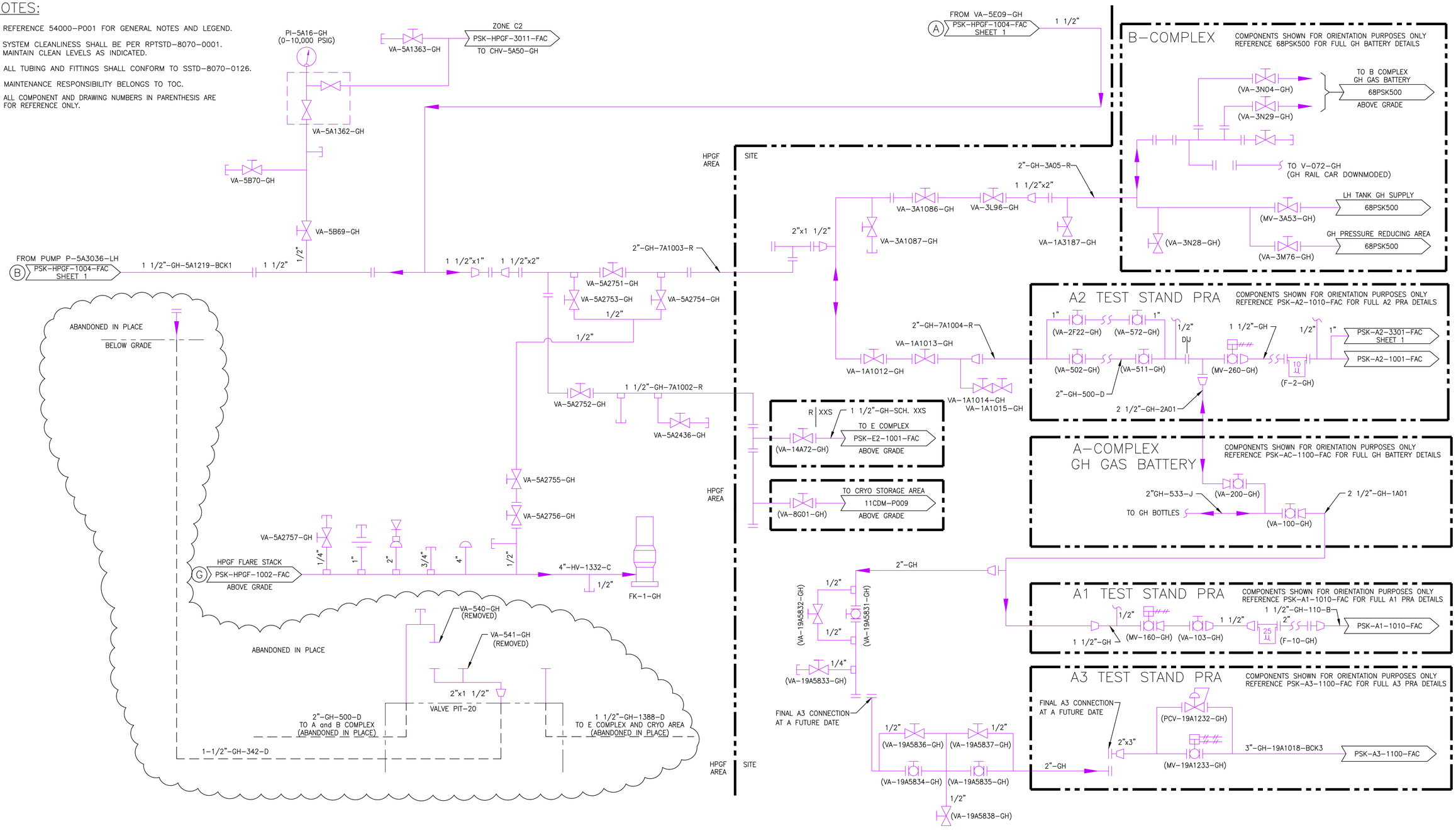

SYM	ZONE	DESCRIPTION	DATE	APPROVED
1	GEN	ENGINEERING RELEASE PER ECR-2013-0038	09/30/13	TS
0	GEN	AS-BUILT RELEASE PER ECR-2013-0009; DRAWING SUPERSEDES 11CDK-P004	04/04/13	TS

REVISIONS

SIGNATURES	DATE
DRAWN JAMES W. WILLIAMS	03/26/13
CHECKED MATTHEW STEED	03/26/13
ENGINEER JAMES E. WILLIAMS	04/01/13
ENGINEER ALAN MAYNE	04/02/13
ENGINEER/ENVIRONMENTAL RAY NICHOLS	03/28/13
SITE MANAGER/FACILITY MANAGER JOHN BAKKER	04/02/13
CONCURRENCE PETER V. TRAN	03/26/13
SUBMITTED JAMES W. WILLIAMS	03/26/13
SAFETY SON LE	04/02/13
APPROVED N/A	N/A

NATIONAL AERONAUTICS AND SPACE ADMINISTRATION

JOHN C. STENNIS SPACE CENTER SSC, MS 39529-6000

HIGH PRESSURE GAS FACILITY
BUILDING 3305
HYDROGEN GAS GENERATOR AREA
PIPING SCHEMATIC

SIZE F | DWG NO. PSK-HPGF-1005-FAC | SHT NO. | REV 1

ISSUED CEF | AUTHORITY ECR-2013-0009 | SHEET 1 OF 1

NOTES:

1. REFERENCE 54000-P001 FOR GENERAL NOTES AND LEGEND.
2. SYSTEM CLEANLINESS SHALL BE PER RPTSTD-8070-0001. MAINTAIN CLEAN LEVELS AS INDICATED. VACUUM SYSTEM LEVEL VC.
3. ALL TUBING AND FITTINGS SHALL CONFORM TO SSTD-8070-0126.
4. MAINTENANCE RESPONSIBILITY BELONGS TO TOC.
5. ALL COMPONENT AND DRAWING NUMBERS IN PARENTHESIS ARE FOR REFERENCE ONLY.

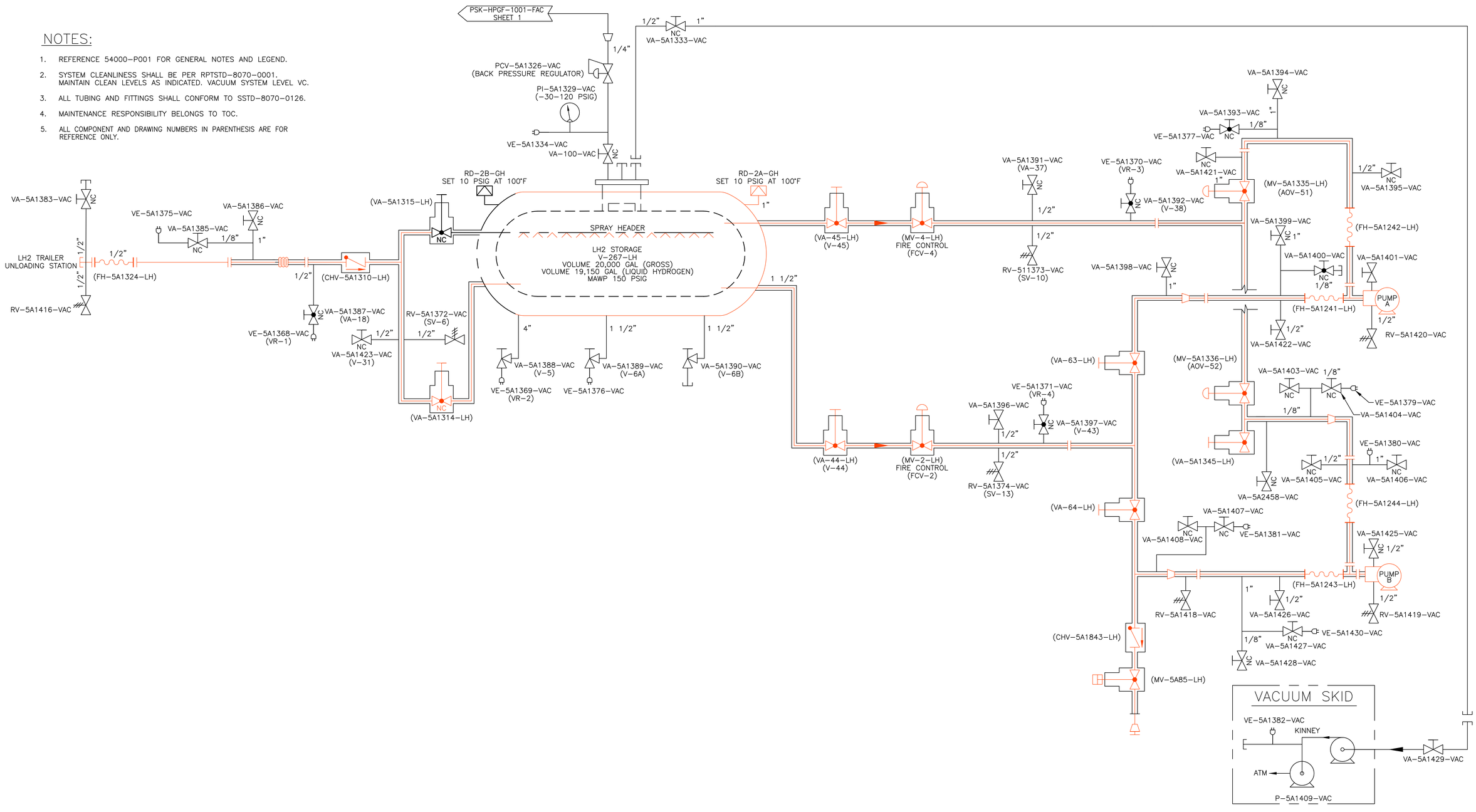

SYM	ZONE	DESCRIPTION	DATE	APPROVED
0	GEN	AS-BUILT RELEASE PER ECR-2013-0009; DRAWING SUPERCEDES 11CDK-P005; INCORPORATES EO-2008-0031, EO-2008-0044, EO-2008-0051 AND EO-2009-0076	04/04/13	TS

REVISIONS

SIGNATURES	DATE
DRAWN JAMES W. WILLIAMS	03/26/13
CHECKED MATTHEW STEED	03/26/13
ENGINEER JAMES E. WILLIAMS	04/01/13
ENGINEER ALAN MAYNE	04/02/13
ENGINEER/ENVIRONMENTAL RAY NICHOLS	03/28/13
SITE MANAGER/FACILITY MANAGER JOHN BAKKER	04/02/13
CONCURRENCE PETER V. TRAN	03/26/13
SUBMITTED JAMES W. WILLIAMS	03/26/13
SAFETY SON LE	04/02/13
APPROVED N/A	N/A

NATIONAL AERONAUTICS AND SPACE ADMINISTRATION

JOHN C. STENNIS SPACE CENTER SSC, MS 39529-6000

HIGH PRESSURE GAS FACILITY BUILDING 3305 HYDROGEN GAS GENERATOR AREA VACUUM PIPING SCHEMATIC

SIZE	DWG NO.	SHT NO.	REV
F	PSK-HPGF-1006-FAC		0

ISSUED CEF — AUTHORITY ECR-2013-0009 — SHEET 1 OF 1

NOTES:

1. REFERENCE 54000–P001 FOR GENERAL NOTES AND LEGEND.
2. SYSTEM CLEANLINESS SHALL BE PER RPTSTD–8070–0001. MAINTAIN CLEAN LEVELS AS INDICATED. VACUUM SYSTEM LEVEL VC.
3. ALL TUBING AND FITTINGS SHALL CONFORM TO SSTD–8070–0126.
4. MAINTENANCE RESPONSIBILITY BELONGS TO TOC.
5. ALL COMPONENT AND DRAWING NUMBERS IN PARENTHESIS ARE FOR REFERENCE ONLY.

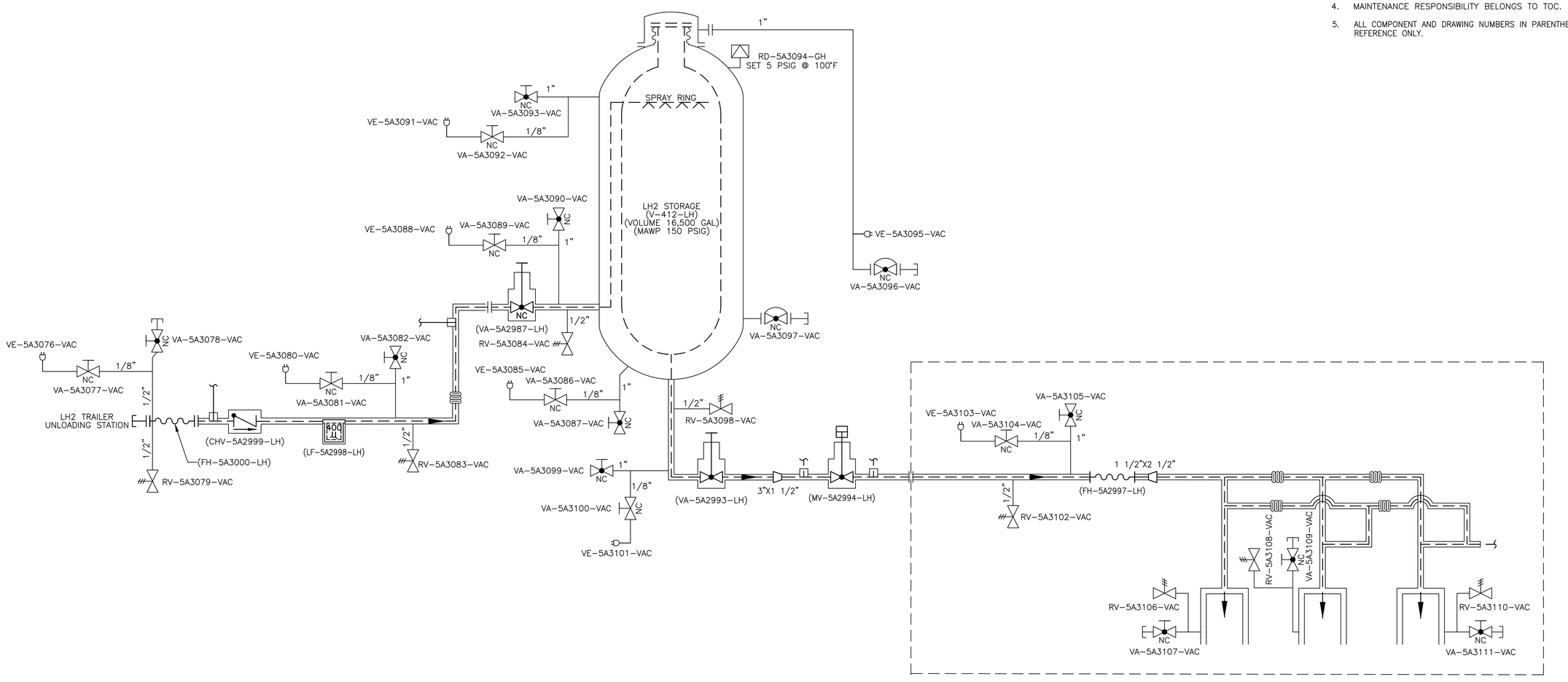

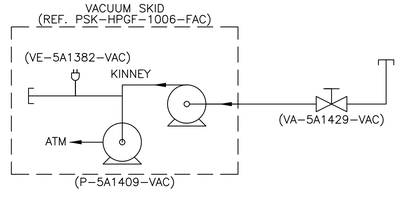

SYM	ZONE	DESCRIPTION	DATE	APPROVED
0	GEN	ENGINEERING RELEASE PER ECR–2013–0038	09/30/13	TS

REVISIONS

SIGNATURES	DATE
DRAWN JOHN PAZOS	09/23/13
CHECKED JAMES W. WILLIAMS	09/23/13
ENGINEER ANDREW BRACEY	09/23/13
ENGINEER N/A	N/A
ENGINEER/ENVIRONMENTAL RAY NICHOLS	09/23/13
SITE MANAGER/FACILITY MANAGER JOHN BAKKER	09/23/13
CONCURRENCE PETER V. TRAN	09/23/13
SUBMITTED JOHN PAZOS	09/23/13
SAFETY TRUC LE	09/23/13
APPROVED N/A	N/A

NATIONAL AERONAUTICS AND SPACE ADMINISTRATION

JOHN C. STENNIS SPACE CENTER
SSC, MS 39529–6000

HIGH PRESSURE GAS FACILITY
BUILDING 3305
HYDROGEN GAS GENERATOR AREA
VACUUM PIPING SCHEMATIC

SIZE	DWG NO.	SHT NO.	REV
F	PSK–HPGF–1007–FAC		0

ISSUED CEF — AUTHORITY ECR–2013–0038 — SHEET 1 OF 1

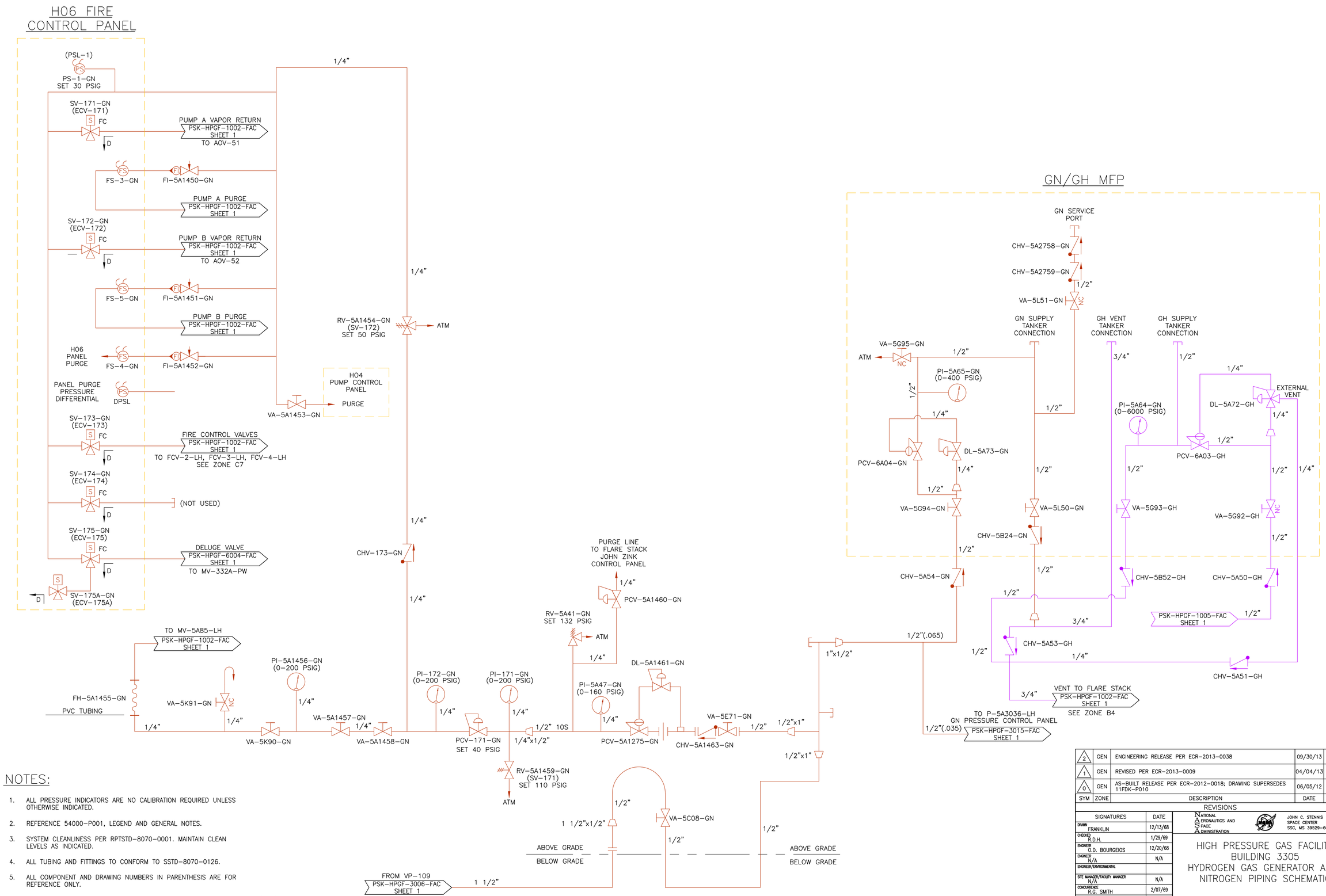

NOTES:

1. ALL PRESSURE INDICATORS ARE NO CALIBRATION REQUIRED UNLESS OTHERWISE INDICATED.
2. REFERENCE 54000-P001, LEGEND AND GENERAL NOTES.
3. SYSTEM CLEANLINESS PER RPTSTD-8070-0001. MAINTAIN CLEAN LEVELS AS INDICATED.
4. ALL TUBING AND FITTINGS TO CONFORM TO SSTD-8070-0126.
5. ALL COMPONENT AND DRAWING NUMBERS IN PARENTHESIS ARE FOR REFERENCE ONLY.
6. MAINTENANCE RESPONSIBILITY BELONGS TO TEST OPERATIONS CONTRACTOR (TOC).

SYM	ZONE	DESCRIPTION	DATE	APPROVED
2	GEN	ENGINEERING RELEASE PER ECR-2013-0038	09/30/13	TS
1	GEN	REVISED PER ECR-2013-0009	04/04/13	TS
0	GEN	AS-BUILT RELEASE PER ECR-2012-0018; DRAWING SUPERSEDES 11FDK-P010	06/05/12	TS

REVISIONS

SIGNATURES	DATE
DRAWN FRANKLIN	12/13/68
CHECKED R.D.H.	1/29/69
ENGINEER O.D. BOURGEIOS	12/20/68
ENGINEER N/A.	N/A
ENGINEER/ENVIRONMENTAL	
SITE MANAGER/FACILITY MANAGER N/A.	N/A
CONCURRENCE R.G. SMITH	2/07/69
SUBMITTED	
SAFETY R.D. HARLOW	1/29/69
APPROVED	

NATIONAL AERONAUTICS AND SPACE ADMINISTRATION

JOHN C. STENNIS SPACE CENTER
SSC, MS 39529-6000

HIGH PRESSURE GAS FACILITY BUILDING 3305 HYDROGEN GAS GENERATOR AREA NITROGEN PIPING SCHEMATIC

SIZE F | DWG NO. PSK-HPGF-3011-FAC | SHT NO. | REV 2

ISSUED CEF | AUTHORITY ECR-2012-0018 | SHEET 1 OF 1

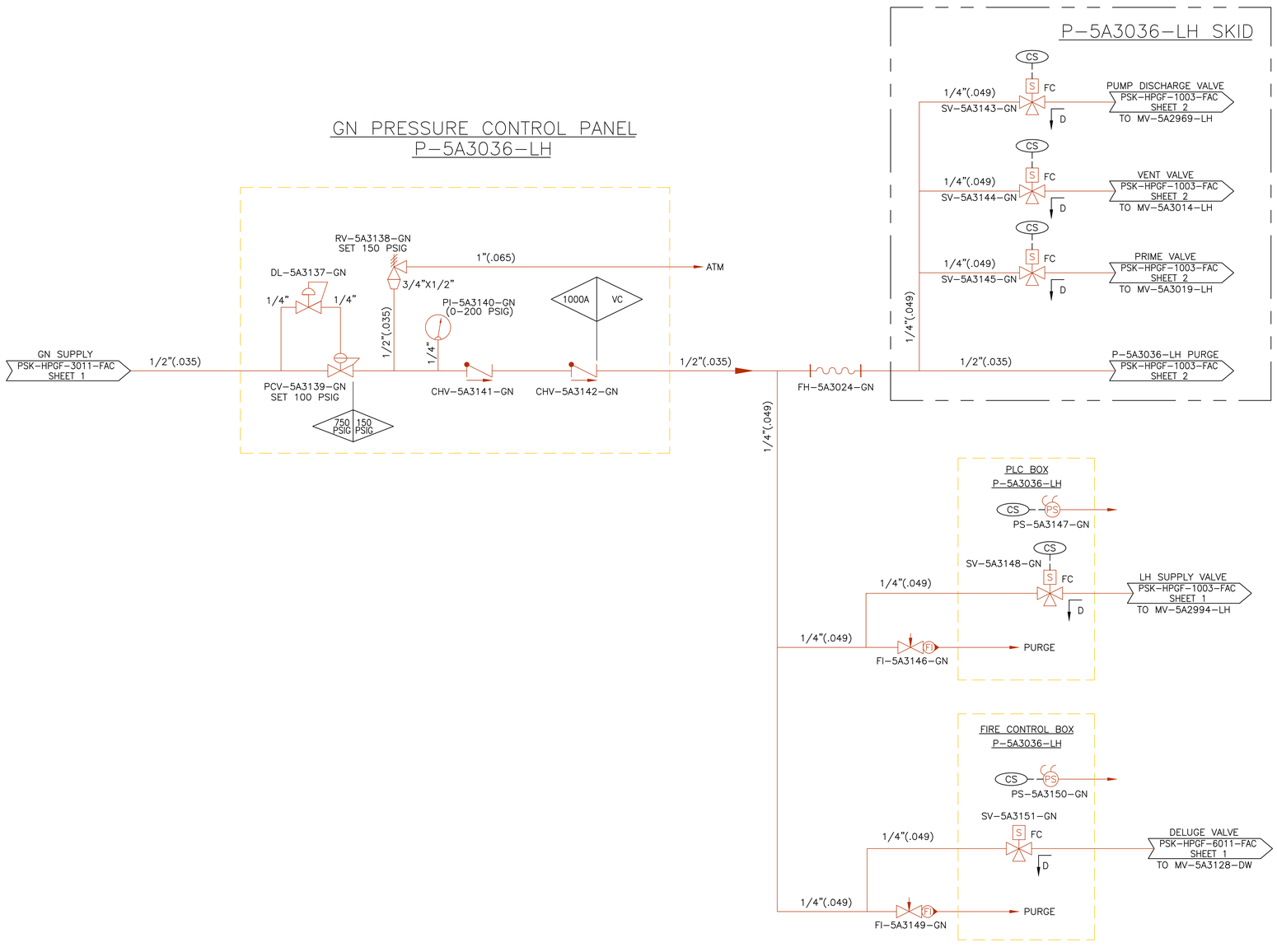

NOTES:

1. ALL PRESSURE INDICATORS ARE NO CALIBRATION REQUIRED UNLESS OTHERWISE INDICATED.
2. REFERENCE 54000-P001, LEGEND AND GENERAL NOTES.
3. SYSTEM CLEANLINESS PER RPTSTD-8070-0001. MAINTAIN CLEAN LEVELS AS INDICATED.
4. ALL TUBING AND FITTINGS TO CONFORM TO SSTD-8070-0126.
5. ALL COMPONENT AND DRAWING NUMBERS IN PARENTHESIS ARE FOR REFERENCE ONLY.
6. MAINTENANCE RESPONSIBILITY BELONGS TO TEST OPERATIONS CONTRACTOR (TOC).
7. COMPONENT SELECTION AND SYSTEM DESIGN COMPLIES WITH INTENT OF NATIONAL FIRE PROTECTION ASSOCIATION AND NATIONAL ELECTRIC CODE FOR APPROPRIATE HAZARDOUS LOCATION CLASSIFICATIONS.

SYM	ZONE	DESCRIPTION	DATE	APPROVED
0	GEN	ENGINEERING RELEASE PER ECR-2013-0038	09/30/13	TS

REVISIONS

SIGNATURES	DATE
DRAWN JOHN PAZOS	09/23/13
CHECKED JAMES W. WILLIAMS	09/23/13
ENGINEER ANDREW BRACEY	09/23/13
ENGINEER N/A	N/A
ENGINEER/ENVIRONMENTAL RAY NICHOLS	09/23/13
SITE MANAGER/FACILITY MANAGER JOHN BAKKER	09/23/13
CONCURRENCE PETER V. TRAN	09/23/13
SUBMITTED JOHN PAZOS	09/23/13
SAFETY TRUC LE	09/23/13
APPROVED N/A	N/A

NATIONAL AERONAUTICS AND SPACE ADMINISTRATION

JOHN C. STENNIS SPACE CENTER
SSC, MS 39529-6000

HIGH PRESSURE GAS FACILITY
BUILDING 3305
HYDROGEN GAS GENERATOR AREA
NITROGEN PIPING SCHEMATIC

SIZE	DWG NO.	SHT NO.	REV
F	PSK-HPGF-3015-FAC		0

ISSUED CEF — AUTHORITY ECR-2013-0038 — SHEET 1 OF 1

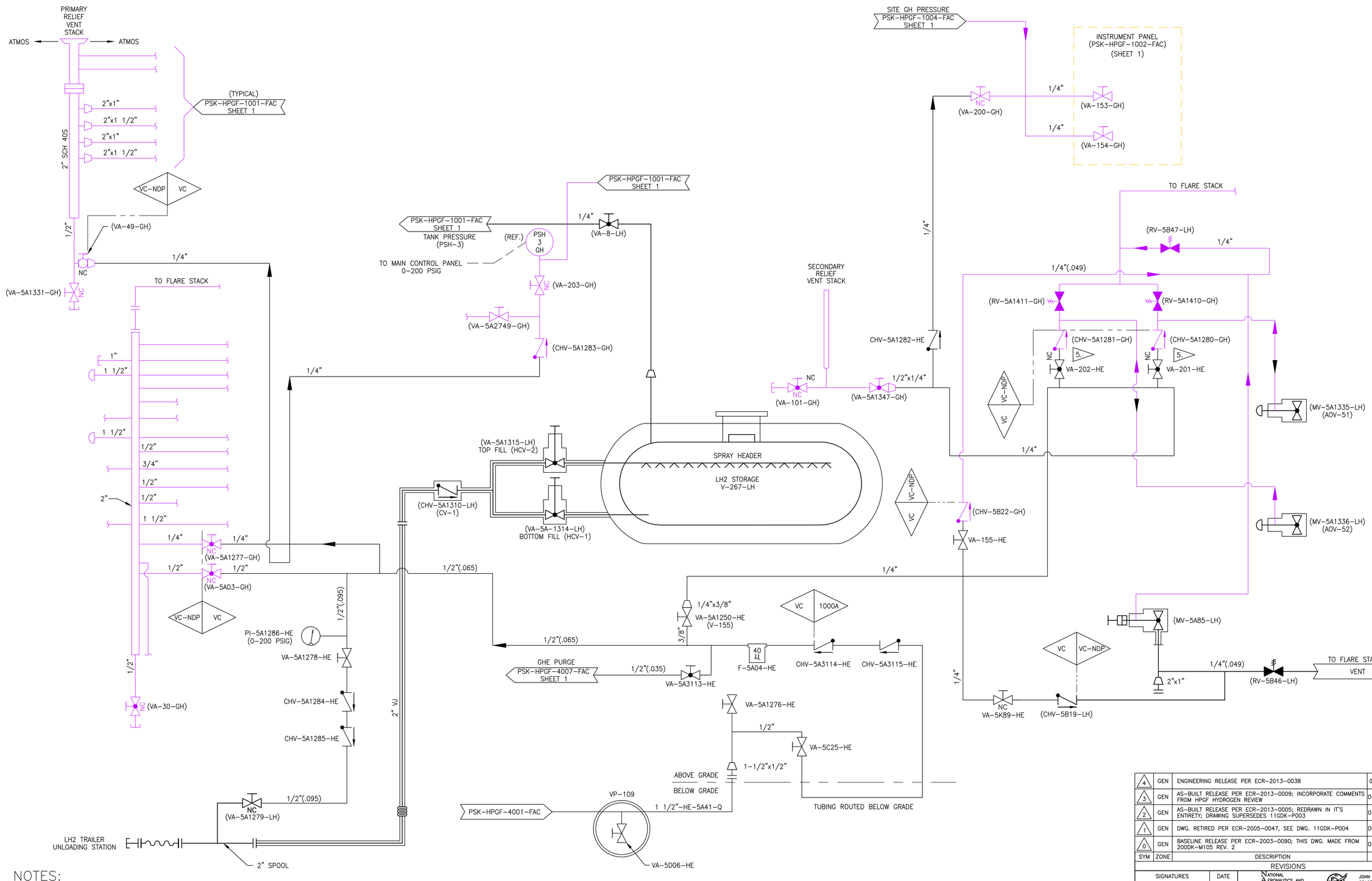

NOTES:

1. REFERENCE 54000-P001 FOR GENERAL NOTES AND LEGEND.
2. SYSTEM CLEANLINESS PER RPTSTD-8070-0001. MAINTAIN CLEAN LEVELS AS INDICATED.
3. ALL TUBING AND FITTINGS TO CONFORM TO SSTD-8070-0126.
4. ALL COMPONENT AND DRAWING NUMBERS IN PARENTHESIS ARE FOR REFERENCE ONLY.
5. HELIUM PURGE CONNECTION FLOWS THROUGH VALVES MV-5A1335-LH AND MV-5A1336-LH THROUGH VAPOR RETURN LINES AND PURGES THE COLD ENDS OF THE PUMPS.

SYM	ZONE	DESCRIPTION	DATE	APPROVED
4	GEN	ENGINEERING RELEASE PER ECR-2013-0038	09/30/13	TS
3	GEN	AS-BUILT RELEASE PER ECR-2013-0009; INCORPORATE COMMENTS FROM HPGF HYDROGEN REVIEW	04/04/13	TS
2	GEN	AS-BUILT RELEASE PER ECR-2013-0005; REDRAWN IN IT'S ENTIRETY; DRAWING SUPERSEDES 11GDK-P003	03/22/13	TS
1	GEN	DWG. RETIRED PER ECR-2005-0047, SEE DWG. 11GDK-P004	08/05/05	STH
0	GEN	BASELINE RELEASE PER ECR-2003-0090; THIS DWG. MADE FROM 200DK-M105 REV. 2	05/08/03	STH

REVISIONS

SIGNATURES	DATE
DRAWN KODI VOLKMAN	12/04/12
CHECKED JUSTIN NOSSER	12/04/12
ENGINEER ALAN MAYNE	12/05/12
ENGINEER JIM E. WILLIAMS	12/06/12
ENGINEER/ENVIRONMENTAL RAY NICHOLS	12/04/12
SITE MANAGER/FACILITY MANAGER JOHN BAKKER	02/19/13
CONCURRENCE PETER V. TRAN	02/12/13
SUBMITTED JIM W. WILLIAMS	12/04/12
SAFETY SON LE	12/16/12
APPROVED N/A	N/A

NATIONAL AERONAUTICS AND SPACE ADMINISTRATION

JOHN C. STENNIS SPACE CENTER
SSC, MS 39529-6000

HELIUM SYSTEM
HPGF HYDROGEN SHELTER AREA
HELIUM PIPING SCHEMATIC
(P/L ISSUED)

SIZE	DWG NO.	SHT NO.	REV
F	PSK-HPGF-4003-FAC		4

ISSUED CEF | AUTHORITY ECR-2003-0090 | SHEET 1 OF 1

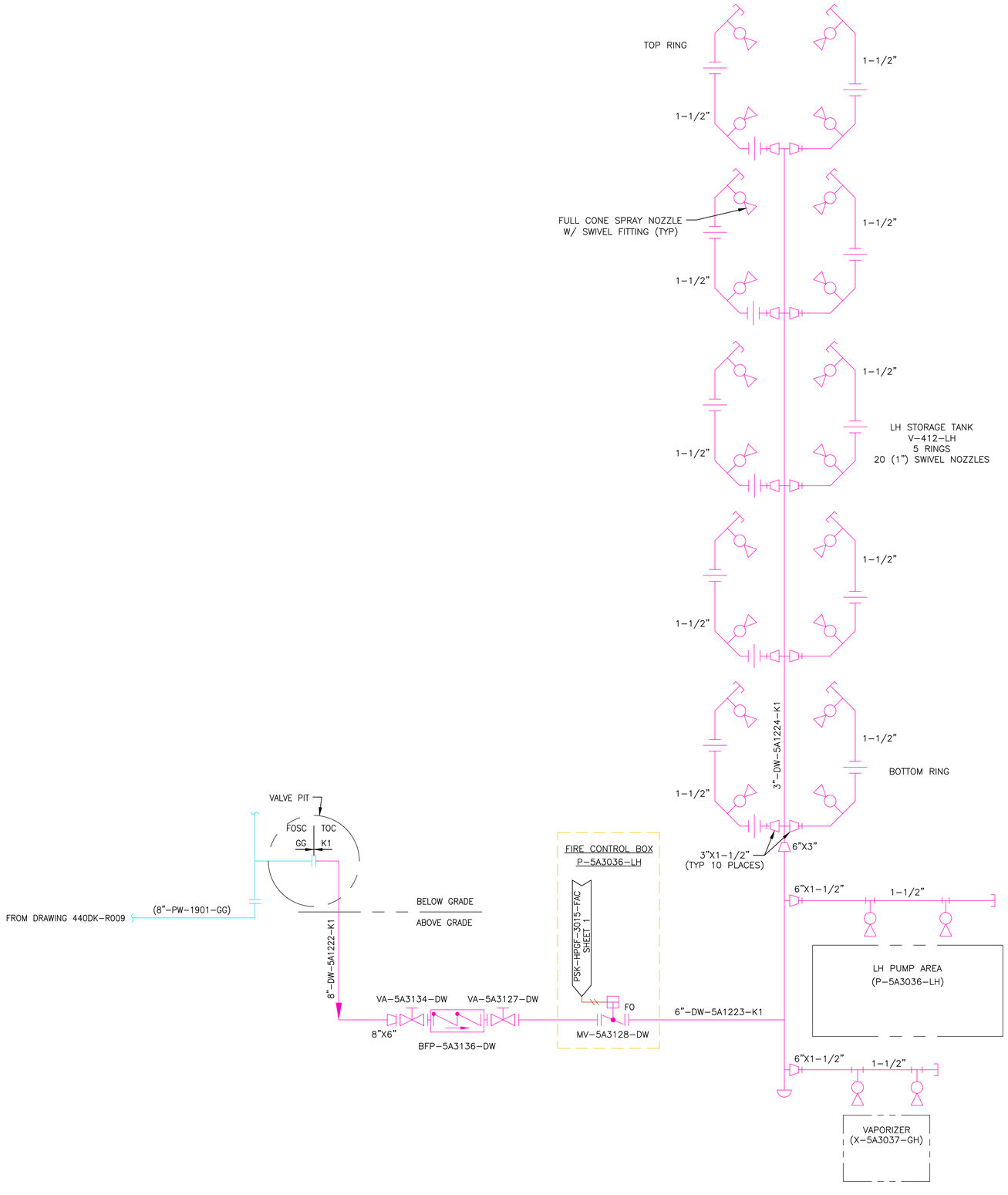

NOTES:

1. REFERENCE 54000-P001 FOR GENERAL NOTES AND LEGEND.
2. SYSTEM CLEANLINESS SHALL BE PER RPTSTD-8070-0001. MAINTAIN CLEAN LEVELS AS INDICATED.
3. ALL TUBING AND FITTINGS SHALL CONFORM TO SSTD-8070-0126.
4. MAINTENANCE RESPONSIBILITY AS INDICATED.
5. ALL COMPONENT AND DRAWING NUMBERS IN PARENTHESIS ARE FOR REFERENCE ONLY.

SYM	ZONE	DESCRIPTION	DATE	APPROVED
0	GEN	ENGINEERING RELEASE PER ECR-2013-0038	09/30/13	TS

REVISIONS

SIGNATURES	DATE
DRAWN JOHN PAZOS	09/23/13
CHECKED JAMES W. WILLIAMS	09/23/13
ENGINEER ANDREW BRACEY	09/23/13
ENGINEER N/A	N/A
ENGINEER/ENVIRONMENTAL RAY NICHOLS	09/23/13
SITE MANAGER/FACILITY MANAGER JOHN BAKKER	09/23/13
CONCURRENCE PETER V. TRAN	09/23/13
SUBMITTED JOHN PAZOS	09/23/13
SAFETY TRUC LE	09/23/13
APPROVED N/A	N/A

NATIONAL AERONAUTICS AND SPACE ADMINISTRATION

JOHN C. STENNIS SPACE CENTER
SSC, MS 39529-6000

HIGH PRESSURE GAS FACILITY BUILDING 3305 HYDROGEN GAS GENERATOR AREA DELUGE PIPING SCHEMATIC

SIZE	DWG NO.	SHT NO.	REV
F	PSK-HPGF-6011-FAC		0

ISSUED CEF: N/A | AUTHORITY: ECR-2013-0038 | SHEET 1 OF 1

APPENDIX C

CONCEPTUAL INTERFACE DRAWING AND ELEVATION VIEW DRAWING

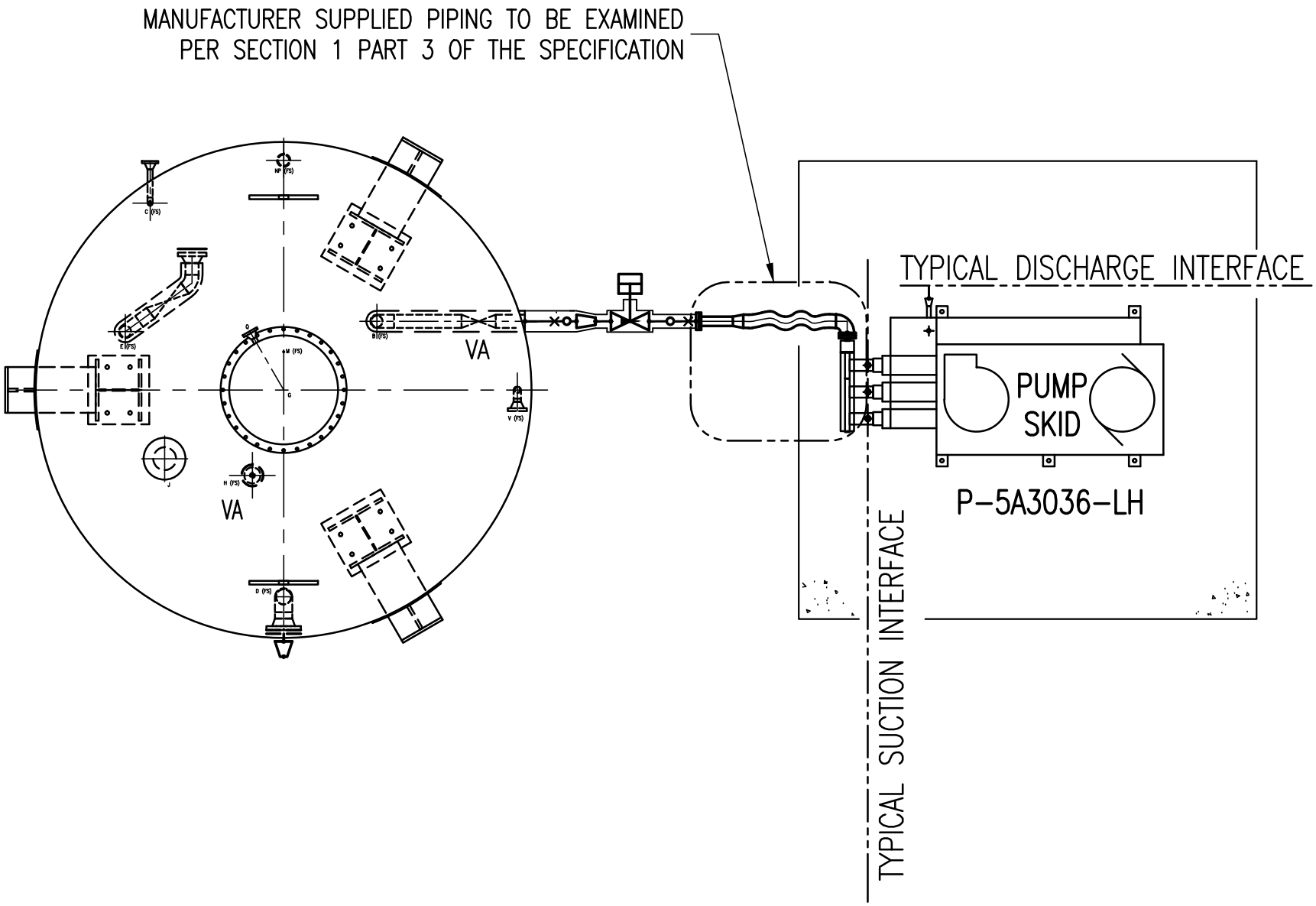
MANUFACTURER SUPPLIED PIPING TO BE EXAMINED
PER SECTION 1 PART 3 OF THE SPECIFICATION
TYPICAL DISCHARGE INTERFACE
PUMP
SKID
P-5A3036-LH
TYPICAL SUCTION INTERFACE
VA
VA
C (FS)
E (FS)
B (FS)
M (FS)
V (FS)
H (FS)
D (FS)
G
J

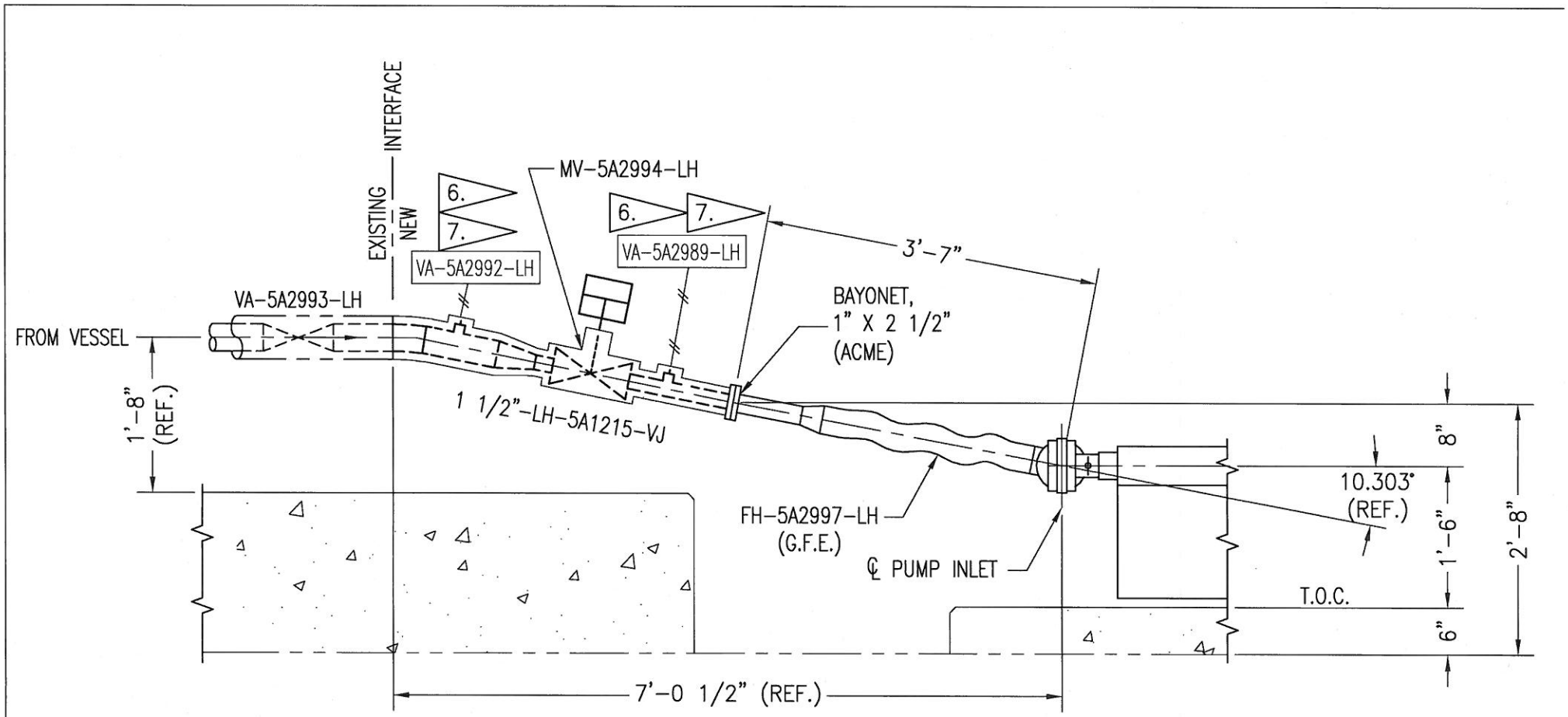

ELEVATION VIEW