NOTICE -- WHEN GOVERNMENT DRAWINGS, SPECIFICATIONS, OR OTHER DATA ARE USED FOR ANY PURPOSE OTHER THAN IN CONNECTION WITH A DEFINITELY RELATED GOVERNMENT PROCUREMENT OPERATION, THE UNITED STATES GOVERNMENT THEREBY INCURS NO RESPONSIBILITY NOR ANY OBLIGATION WHATSOEVER; AND THE FACT THAT THE GOVERNMENT MAY HAVE FORMULATED, FURNISHED, OR IN ANY WAY SUPPLIED THE SAID DRAWINGS, SPECIFICATIONS OR ANY OTHER DATA IS NOT TO BE REGARDED BY IMPLICATION OR OTHERWISE IN ANY MANNER CONSTRUED, AS LICENSING THE HOLDER, OR ANY OTHER PERSONS OR CORPORATION, OR CONVEYING ANY RIGHTS OR PERMISSION TO MANUFACTURE, USE, OR SELL ANY PATENTED INVENTION THAT IN ANY WAY BE RELATED THERETO.

# LAUNCH COMPLEX 39
# LAUNCH PAD 39B
# REFURBISH AND MODIFY FLAME TRENCH

NATIONAL AERONAUTICS AND
SPACE ADMINISTRATION

John F. Kennedy Space Center
Kennedy Space Center, Florida 32899

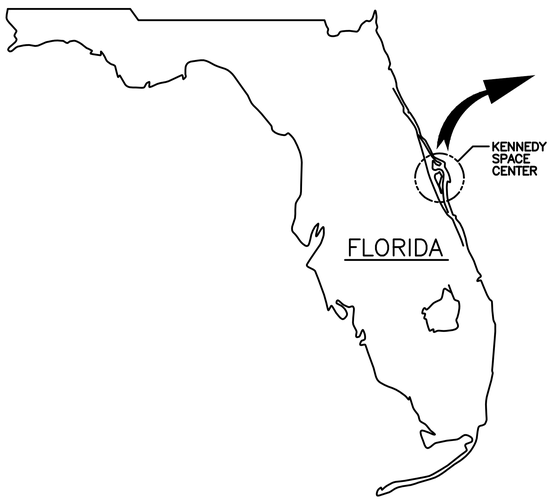


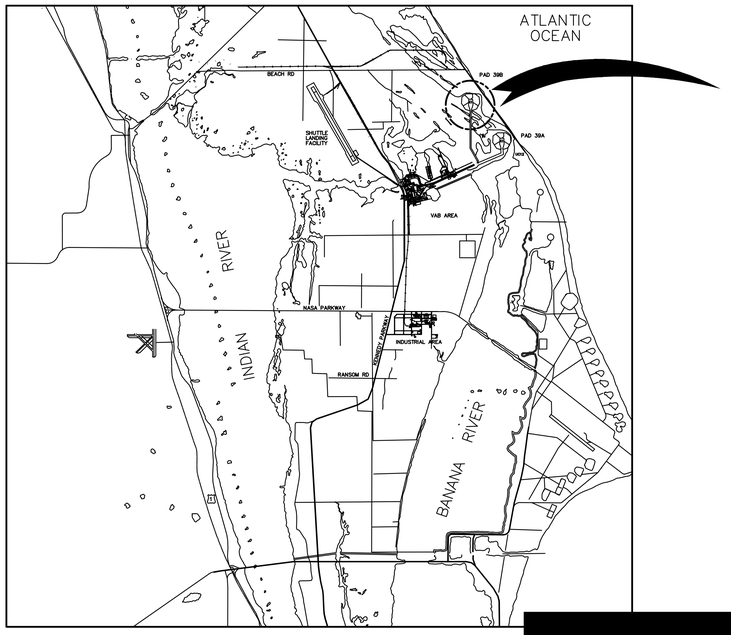


N
AREA MAP
NO SCALE

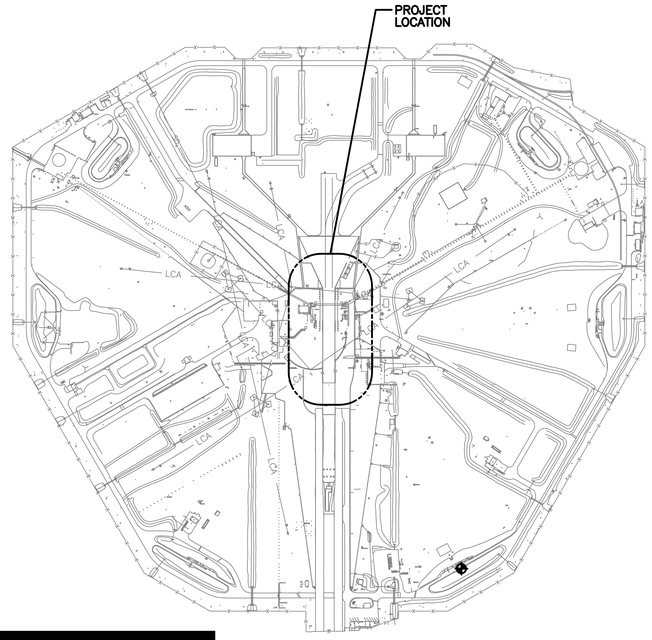


N
LOCATION MAP
NO SCALE

TECHNICAL SPECIFICATION No.79K39356
DATE: AUGUST 5, 2014

**ASBESTOS IDENTIFIED**

☒ YES ☐ NO

IF THE CONTRACTOR SUSPECTS THE PRESENCE OF ANY ASBESTOS CONTAMINATED MATERIAL NOT IDENTIFIED ON THESE DRAWINGS, BUT IS REQUIRED TO BE DISTURBED TO PERFORM THE CONTRACT WORK, INFORM THE CONTRACTING OFFICER AT ONCE.

**HEAVY METALS IDENTIFIED**

☐ YES ☒ NO

IF THE CONTRACTOR SUSPECTS THE PRESENCE OF ANY HEAVY METAL COATING MATERIAL NOT IDENTIFIED ON THESE DRAWINGS, BUT IS REQUIRED TO BE DISTURBED TO PERFORM THE CONTRACT WORK, INFORM THE CONTRACTING OFFICER AT ONCE.

RS&H IMPROVING YOUR WORLD
Reynolds, Smith and Hills, Inc.
115 Alma Blvd., Suite 101
Merritt Island, Florida 32953-4101
(321) 453-0212 (321) 453-0223 FAX
www.rsandh.com

THIS COMPUTER DRAWING WAS CREATED IN AUTOCAD AND FILED UNDER THE DRAWING NUMBER V1

| SYM | ZONE | DESCRIPTION | DATE | APPROVAL |
|---|---|---|---|---|
| | | REVISIONS | | |

RS&H IMPROVING YOUR WORLD
Reynolds, Smith and Hills, Inc.
115 Alma Blvd, Suite 101
Merritt Island, Florida 32953
(321) 453-0212 (321) 453-0223 FAX
www.rsandh.com

| SIGNATURES | | DATE |
|---|---|---|
| DRAWN: | J. HAUER | 08/5/14 |
| CHECKED: | C. YOUNG | 08/5/14 |
| SUBMITTED: | | |
| A&E PROJECT MGR: | C. YOUNG | |
| APPROVED: | | |
| A&E OFFICE MGR: | J. SALTSMAN | |
| NASA PROJECT MGR: | L. JONES | |
| NASA B/MGR | W. SCHROEDER | |

NATIONAL AERONAUTICS AND SPACE ADMINISTRATION
JOHN F. KENNEDY SPACE CENTER, NASA
KENNEDY SPACE CENTER, FLORIDA

LAUNCH COMPLEX 39
LAUNCH PAD 39B
REFURBISH AND MODIFY
FLAME TRENCH

COVER SHEET

| FILE NO. | SIZE | DWG. NO. | REV |
|---|---|---|---|
| 302-6058-051 | F | 79K39723 | |

PROJ. NO. PCN 98948 SHEET 1 OF 10

KSC FORM 1-11 (REV. 3/76) (CIG 3/93)

NOTICE -- WHEN GOVERNMENT DRAWINGS, SPECIFICATIONS, OR OTHER DATA ARE USED FOR ANY PURPOSE OTHER THAN IN CONNECTION WITH A DEFINITELY RELATED GOVERNMENT PROCUREMENT OPERATION, THE UNITED STATES GOVERNMENT THEREBY INCURS NO RESPONSIBILITY NOR ANY OBLIGATION WHATSOEVER; AND THE FACT THAT THE GOVERNMENT MAY HAVE FORMULATED, FURNISHED, OR IN ANY WAY SUPPLIED THE SAID DRAWINGS, SPECIFICATIONS OR ANY OTHER DATA IS NOT TO BE REGARDED BY IMPLICATION, OR OTHERWISE IN ANY MANNER CONSTRUED, TO LICENSE THE HOLDER OR ANY OTHER PERSONS OR CORPORATION, OR CONVEY ANY RIGHTS OR PERMISSION TO MANUFACTURE, USE, OR SELL ANY PATENTED INVENTION THAT IN ANY WAY BE RELATED THERETO.

## GENERAL SYMBOLS LEGEND

SECTION OR DETAIL TITLE — SECTION / DETAIL, SCALE: — X / S1 S2

TITLE — TITLE, SCALE:

SECTION CALLOUT — SECTION IDENTIFIER; X / S1 S2; SOURCE DWG; DESTINATION DWG

DETAIL CALLOUT — DETAIL IDENTIFIER; # / S1 S2; SOURCE DWG; DESTINATION DWG

FLAG NOTE INDICATOR — #

NORTH ARROW — N

PERIMETER FENCE

EXISTING TO REMAIN LINE TYPE

DEMOLITION LINE TYPE

LIGHTNING CONDUCTOR ARRESTOR — LCA

BID OPTION

BENCHMARK

WORKING POINT

CONTRACTOR'S CONSTRUCTION TRAILERS

CONTRACTOR'S COMPANY VEHICLE PARKING (SHARED PARKING AREA)

CONTRACTOR'S TEMPORARY LAYDOWN AREA

REFRACTORY BRICK — OR

REFRACTORY CONCRETE

LIMITS OF CONSTRUCTION

CONCRETE

## DRAWING INDEX

| SHEET NUMBER | FUNCTION CODE | REVISION STATUS | DWG TITLE |
|---|---|---|---|
| 1 | V1 | | COVER SHEET |
| 2 | V2 | | DRAWING INDEX, GENERAL NOTES, ABBREVIATIONS AND LEGEND |
| 3 | V3 | | VICINITY PLAN AND NOTES |
| 4 | S1 | | FLAME TRENCH PLAN |
| 5 | S2 | | EAST WALL MODIFICATIONS |
| 6 | S3 | | WEST WALL MODIFICATIONS |
| 7 | S4 | | REFRACTORY BRICK DETAILS |
| 8 | S5 | | REFRACTORY CONCRETE AND REFRACTORY BRICK DETAILS |
| 9 | S6 | | FLOOR MODIFICATION DETAILS |
| 10 | S7 | | WALL MODIFICATION DETAILS |

## GENERAL NOTES:

1. SUMMARY OF WORK INCLUDES THE FOLLOWING:
   - REPLACE WALL BRICKS.
   - RESTORE FLAME TRENCH WALLS.
   - PERFORM REPAIRS TO THE FLAME TRENCH FLOOR.
   - MODIFY/REFURBISH ANCILLARY SYSTEMS FOR COMPATIBILITY WITH NEW STRUCTURE.
2. CONTRACTOR SHALL SUBMIT A DEMOLITION PLAN TO IDENTIFY ELEMENTS TO BE REMOVED AND VERIFY WITH CONTRACTING OFFICER. PLAN SHALL BE APPROVED PRIOR TO BEGINNING WORK.
3. CONTRACTOR SHALL SUBMIT AN IMPLEMENTATION PLAN FOR APPROVAL PRIOR TO BEGINNING REMOVAL OF ANY ACM.
4. THE DEPICTED SURVEY WAS PREPARED BY ALLEN ENGINEERING INC. OF 106 DIXIE LANE, COCOA BEACH, FL 32931, DATED APRIL 11, 2012.
5. THE HORIZONTAL CONTROL USED AND THE ELEVATIONS SHOWN ARE BASED ON UNITED STATES COAST AND GEODETIC SURVEY MARK DESIGNATION 39 B 3, PID AK1118. MARK IS A TRIANGULATION STATION DISK STAMPED "39 B-3 1966" ORTHOMETRIC HEIGHT = 16.68 FEET, NORTH AMERICAN VERTICAL DATUM OF 1988. THIS BENCHMARK IS LOCATED AT KENNEDY SPACE CENTER, AT LAUNCH COMPLEX 39B, NEAR CZR CAMERA PAD NO. 3 (SEE SHEET V3).

## FLAME TRENCH FLOOR: ASBESTOS BULK SAMPLE LABORATORY ANALYSIS SUMMARY

| HMID NO. | HOMOGENEOUS MATERIAL DESCRIPTION | SAMPLE LOCATIONS | SAMPLE NUMBERS | ASBESTOS (YES/NO) | FRIABLE (YES/NO) | TYPE | % & TYPE ASBESTOS |
|---|---|---|---|---|---|---|---|
| FE-07 | ROPE GASKET/EXPANSION JOINT | LC39B FLAME TRENCH FLOOR | M3321, M3322, M3323 | YES | YES | MISCELLANEOUS (GASKET/EXPANSION) | 80% CHRYSOTILE |
| MM01 | FLOOR CORE SAMPLE LAYER: YELLOW/TAN EPOXY/MORTAR | LC39B FLAME TRENCH FLOOR | M3647, M3801(B) | NO | NO | MISCELLANEOUS (MASTIC) | NO ASBESTOS DETECTED |
| MO10 | FLOOR CORE SAMPLE LAYER 1: FLOOR BRICK | LC39B FLAME TRENCH FLOOR | M3646, M3801(A) | NO | NO | MISCELLANEOUS (OTHER) | NO ASBESTOS DETECTED |
| MO11 | FLOOR CORE SAMPLE LAYER 3: CONCRETE BASE PAD/FOUNDATION | LC39B FLAME TRENCH FLOOR | M3645 | NO | NO | MISCELLANEOUS (OTHER) | NO ASBESTOS DETECTED |

NOTES:

1. SAMPLE DATA CAN BE REFERENCED IN THE MARCH 26, 2013 INOMEDIC HEALTH APPLICATIONS REPORT (PCN 98948).
2. ACMS HAVE BEEN IDENTIFIED IN AREAS OF THE FLAME TRENCH FLOOR THAT WILL BE REPAIRED. HOMOGENOUS MATERIALS IDENTIFIED AS ACM ARE INDICATED IN THE TABLES ON THIS SHEET. IF ACM IS DISTURBED, THE CONTRACTOR SHALL PERFORM ASBESTOS ABATEMENT IN ACCORDANCE WITH FEDERAL, STATE, AND LOCAL REGULATORY REQUIREMENTS. THE CONTRACTOR SHALL SUBMIT AN IMPLEMENTATION PLAN FOR APPROVAL PRIOR TO BEGINNING REMOVAL OF ANY ACM.
3. THE CONTRACTOR SHALL MANAGE AND DISPOSE OF ACM IN ACCORDANCE WITH SPECIFICATIONS 02 82 13.00 98 ASBESTOS ABATEMENT AND 01 57 20.00 10 ENVIRONMENTAL PROTECTION.

## BID OPTION SUMMARY TABLE

| BID OPTION NO. | DESCRIPTION | SHEETS AFFECTED |
|---|---|---|
| 001 | INSTALLATION OF REFRACTORY BRICK SOUTH OF FUTURE FLAME DEFLECTOR | S2, S3, S4 |
| 002 | REMOVAL OF FLAME DEFLECTOR RAILS AND BACKFILL OF CONCRETE<br><br>METAL SUPPORT RAILS SHALL BECOME THE PROPERTY OF THE CONTRACTOR FOR DELIVERY TO A RECYCLING FACILITY OF THE CONTRACTOR'S CHOICE OR MAY BE DISPOSED OF ON GOVERNMENT PROPERTY (I.E. DARCY OR RRMF). | S6, S7 |

NOTE:
IF BID OPTION 001 IS NOT EXERCIZED, THE CONTRACTOR SHALL PERFORM ALL OTHER CONTRACT REQUIREMENTS FOR THE AREA IDENTIFIED WITH THE FOLLOWING MODIFICATIONS:

a. THE CONCRETE SURFACE SHALL BE SEALED WITH TWO COATS OF SIKAGARD 670W (SIKA CORPORATION) OR APPROVED EQUAL IN ACCORDANCE WITH THE MANUFACTURER'S INSTRUCTIONS AFTER CLEANING PER SSPC SP13.

b. THE LOWER TWO COURSES OF REFRACTORY BRICK SHALL NOT BE REMOVED.

## ABBREVIATIONS

| | |
|---|---|
| ACI | AMERICAN CONCRETE INSTITUTE |
| ACM | ASBESTOS CONTAINING MATERIAL |
| A&E | ARCHITECT AND ENGINEER |
| APPROX | APPROXIMATELY |
| BLVD. | BOULEVARD |
| BR | BRANCH |
| CL / ℄ | CENTER LINE |
| CLR | CLEAR |
| CONC | CONCRETE |
| CONT | CONTINUOUS |
| CS | CARBON STEEL |
| DARCY | DIVERTED AGGREGATE RECLAMATION AND COLLECTION YARD |
| DIA / ø | DIAMETER |
| DIMS | DIMENSIONS |
| DWG | DRAWING |
| DEPT. | DEPARTMENT |
| EA | EACH |
| ELEV / EL | ELEVATION |
| EXIST | EXISTING |
| FT | FEET |
| GA | GAUGE |
| HD | HEAD |
| HDG | HOT DIPPED GALVANIZED |
| HMID | HOMOGENOUS MATERIAL IDENTIFICATION |
| ICC-ES | INTERNATIONAL CODE COUNCIL-EVALUATION SERVICE |
| I.E. | ID EST (THAT IS) |
| INC. | INCORPORATED |
| KSC | KENNEDY SPACE CENTER |
| LB | POUNDS |
| LG | LONG |
| LH2 | LIQUID HYDROGEN |
| LO2 | LIQUID OXYGEN |
| MIN | MINIMUM |
| MGR | MANAGER |
| MM | MOUNT MECHANISM |
| NAD | NO ASBESTOS DETECTED |
| NASA | NATIONAL AERONAUTICS AND SPACE ADMINISTRATION |
| NIC | NOT IN CONTRACT |
| NO. | NUMBER |
| NTS | NOT TO SCALE |
| OAE | OR APPROVED EQUAL |
| OC | ON CENTER |
| OPP | OPPOSITE |
| PCN | PROJECT CONTROL NUMBER |
| PID | PERMANENT IDENTIFICATION |
| PL | PLATE |
| PLC | PLACES/PLACEMENT |
| PPM | PARTS PER MILLION |
| PROJ. | PROJECT |
| PPM | PARTS PER MILLION |
| PSI | POUNDS PER SQUARE INCH |
| PT | POINT OF TANGENCY |
| R | RADIUS |
| REBAR | REINFORCING BAR |
| REF | REFERENCE |
| REV | REVISION |
| RRMF | REUTILIZATION, RECYCLING AND MARKETING FACILITY |
| SIM | SIMILAR |
| SQ | SQUARE |
| SST | STAINLESS STEEL |
| SYM | SYMBOL |
| TEMP | TEMPORARY |
| TYP | TYPICAL |
| VIF | VERIFY IN FIELD |
| WP | WORKING POINT |

WHEN PRINTED FULL SIZE, THIS SHEET IS 28"X40"
THIS COMPUTER DRAWING WAS CREATED IN AUTOCAD AND FILED UNDER THE DRAWING NUMBER

V2

| SYM | ZONE | DESCRIPTION | DATE | APPROVAL |
|---|---|---|---|---|
| | | REVISIONS | | |

RS&H IMPROVING YOUR WORLD
Reynolds, Smith and Hills, Inc.
115 Alma Blvd, Suite 101
Merritt Island, Florida 32953
(321) 453-0212 (321) 453-0223 FAX
www.rsandh.com

| SIGNATURES | | DATE |
|---|---|---|
| DRAWN: | J. HAUER | 08/5/14 |
| CHECKED: | C. YOUNG | 08/5/14 |
| SUBMITTED: | | |
| A or E of RECORD: | C. YOUNG | |
| ST OF LICENSURE: | FL | |
| LICENSE NO: | 69264 | |
| APPROVED: | | |
| A&E DISCPLIN DEPT HD: | J. SALTSMAN | |
| NASA SYS LDE: | M. HARTNETT | |

NATIONAL AERONAUTICS AND SPACE ADMINISTRATION
JOHN F. KENNEDY SPACE CENTER, NASA
KENNEDY SPACE CENTER, FLORIDA

LAUNCH COMPLEX 39
LAUNCH PAD 39B

# REFURBISH AND MODIFY FLAME TRENCH
# DRAWING INDEX, GENERAL NOTES, ABBREVIATIONS AND LEGEND

| FILE NO. | SIZE | DWG. NO. | REV |
|---|---|---|---|
| 302-6058-051 | F | 79K39723 | |

PROJ. NO. PCN 98948 SHEET 2 OF

KSC FORM 1-11 (REV. 3/76) (CG 3/93)

NOTICE -- WHEN GOVERNMENT DRAWINGS, SPECIFICATIONS, OR OTHER DATA ARE USED FOR ANY PURPOSE OTHER THAN IN CONNECTION WITH A DEFINITELY RELATED GOVERNMENT PROCUREMENT OPERATION, THE UNITED STATES GOVERNMENT THEREBY INCURS NO RESPONSIBILITY NOR ANY OBLIGATION WHATSOEVER; AND THE FACT THAT THE GOVERNMENT MAY HAVE FORMULATED, FURNISHED, OR IN ANY WAY SUPPLIED THE SAID DRAWINGS, SPECIFICATIONS OR ANY OTHER DATA IS NOT TO BE REGARDED BY IMPLICATION OR OTHERWISE IN ANY MANNER LICENSING THE HOLDER OR ANY OTHER PERSONS OR CORPORATION, OR CONVEYING ANY RIGHTS OR PERMISSION TO MANUFACTURE, USE, OR SELL ANY PATENTED INVENTION THAT IN ANY WAY BE RELATED THERETO.

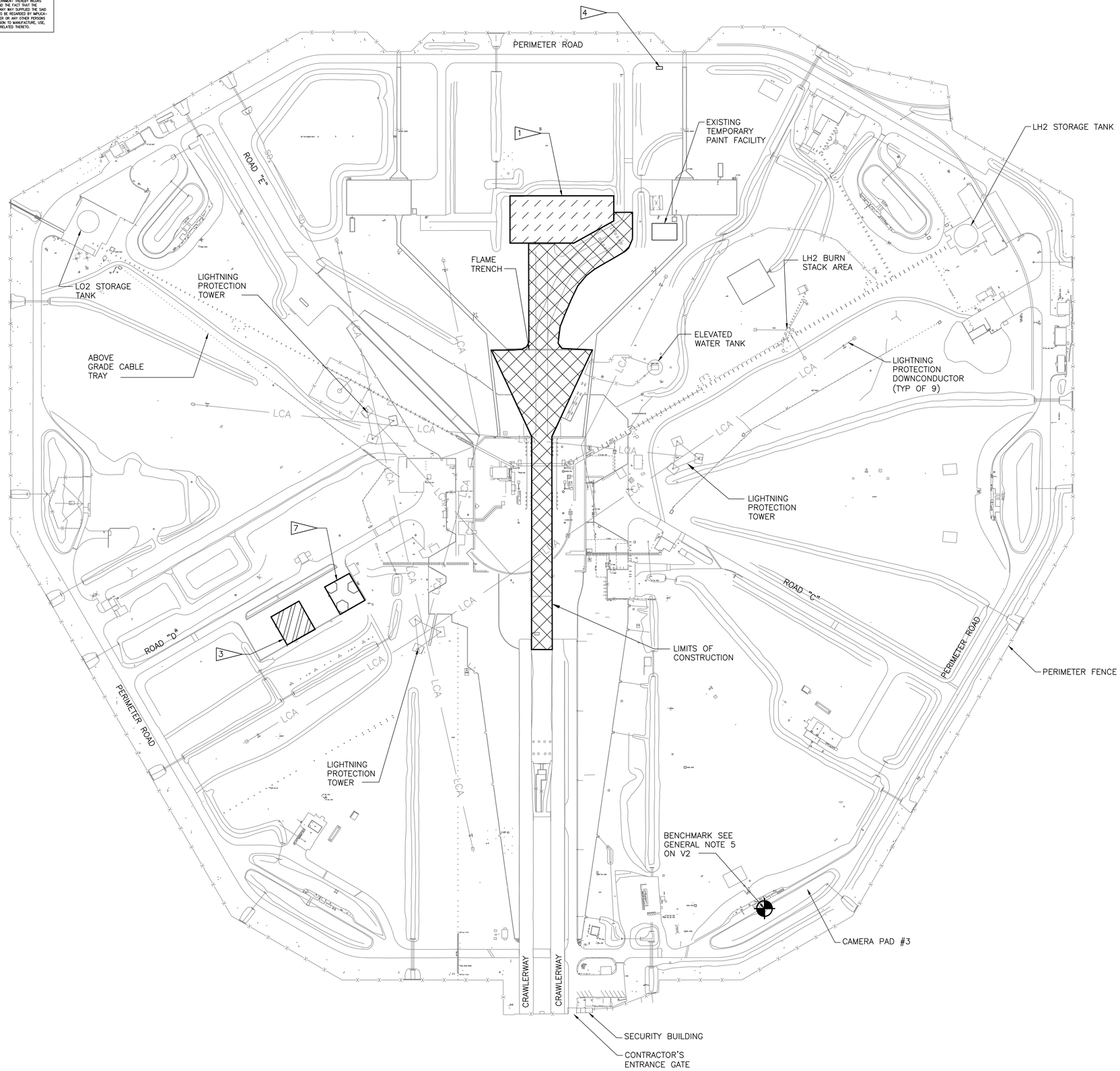


N

## OVERALL PLAN AT LAUNCH PAD 39B

SCALE: NTS

## NOTES:

1. LAYDOWN AREAS AND ACCESS AREAS SHALL BE COORDINATED WITH THE CONTRACTING OFFICER.
2. THE CONTRACTOR SHALL BE RESPONSIBLE FOR REPAIR AT NO COST TO THE GOVERNMENT OF ANY DAMAGE TO EXISTING UTILITIES, EQUIPMENT, AND INFRASTRUCTURE.
3. CONSTRUCTION TRAILERS. COORDINATE WITH THE CONTRACTING OFFICER.
4. CONCRETE WASHOUT, SEE DETAIL 1
5. GROUNDCOVER SHALL BE PROVIDED IN A MANNER THAT PROMOTES PROPER HEALTH, AND NATURAL COLOR. SOD SHALL HAVE A NEAT UNIFORM APPEARANCE FREE OF BARE AREAS, RUTS, HOLES, WEEDS, PESTS, DEAD VEGETATION, DEBRIS, AND UNWANTED VEGETATION. WATER, FERTILIZE AND PROMOTE GROWTH. GROUNDCOVER ESTABLISHMENT PERIOD WILL COMMENCE ON THE DATE THAT INSPECTION BY THE CONTRACTING OFFICER SHOWS THAT THE NEW SOD FURNISHED UNDER THIS CONTRACT HAS BEEN SATISFACTORILY INSTALLED TO A 95 PERCENT STAND OF COVERAGE. THE ESTABLISHMENT PERIOD SHALL CONTINUE FOR A PERIOD OF 60 DAYS.
6. AFTER COMPLETION OF CONSTRUCTION, AREAS DISTRUBED BY CONSTRUCTION ACTIVITIES SHALL BE SODDED USING PASPALUM NOTATUM (BAHIA SOD), SOLID SOD, WEED FREE AND FRESHLY CUT. SEE NOTE 5 FOR ESTABLISHMENT PERIOD.
7. PARKING AREA SHALL BE SHARED WITH OTHERS ON SEPARATE CONTRACTS.

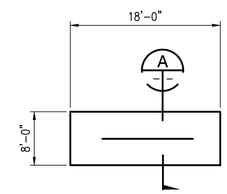


TEMP CONC WASHOUT 1

SCALE: NTS

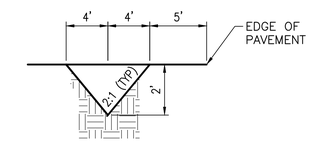


SECTION A

SCALE: NTS

## TEMP CONC WASHOUT NOTES:

MAINTENANCE REQUIREMENTS:

A.) EXCAVATE SOLIDIFIED AND WASTE CONCRETE NOT LESS THAN ONCE PER WEEK.

B.) RESHAPE TO DESIGN ALIGNMENT AND GRADE WITH SUITABLE SOIL MATERIAL FOLLOWING EXCAVATION.

C.) MAINTAIN NOT LESS THAN 1/3 CAPACITY AT ALL TIMES. CLEAN OUT AND REGRADE AS APPROPRIATE BUT NOT LESS THAN A.) ABOVE.

CLOSEOUT ACTIVITIES:

D.) EXCAVATE SOLIDIFIED AND WASTE CONCRETE.

E.) BACKFILL AND COMPACT, GRADE TO MATCH EXISTING GRADE.

F.) SOD TOP OF TEMPORARY CONCRETE WASHOUT AFTER COMPLETION OF D.) AND E.) SOD USING PASPALUM NOTATUM (BAHIA SOD) 2"-3" SOLID SOD, WEED FREE AND FRESHLY CUT. SEE NOTE 5 FOR ESTABLISHMENT PERIOD.

WHEN PRINTED FULL SIZE, THIS SHEET IS 28"X40"
THIS COMPUTER DRAWING WAS
CREATED IN AUTOCAD AND
FILED UNDER THE DRAWING NUMBER

V3

| SYM | ZONE | DESCRIPTION | DATE | APPROVAL |
|---|---|---|---|---|
| | | REVISIONS | | |

RS&H IMPROVING YOUR WORLD
Reynolds, Smith and Hills, Inc.
115 Alma Blvd, Suite 101
Merritt Island, Florida 32953
(321) 453-0212 (321) 453-0223 FAX
www.rsandh.com

| SIGNATURES | | DATE |
|---|---|---|
| DRAWN: | J. HAUER | 08/5/14 |
| CHECKED: | B. LYTLE | 08/5/14 |
| SUBMITTED: | | |
| A or E of RECORD: | C. YOUNG | |
| ST OF LICENSURE: FL LICENSE NO: | 69264 | |
| APPROVED: | | |
| A&E DISCPLIN DEPT HD: | J. SALTSMAN | |
| NASA SYS/LDE: | M. HARTNETT | |

NATIONAL AERONAUTICS AND SPACE ADMINISTRATION
JOHN F. KENNEDY SPACE CENTER, NASA
KENNEDY SPACE CENTER, FLORIDA

LAUNCH COMPLEX 39
LAUNCH PAD 39B

# REFURBISH AND MODIFY FLAME TRENCH VICINITY PLAN AND NOTES

| FILE NO. | SIZE | DWG. NO | REV |
|---|---|---|---|
| 302-6058-051 | F | 79K39723 | |

PROJ. NO. PCN 98948 SHEET 3 OF

KSC FORM 1-11 (REV. 3/76) (CG 3/93)

NOTICE -- WHEN GOVERNMENT DRAWINGS, SPECIFICATIONS, OR OTHER DATA ARE USED FOR ANY PURPOSE OTHER THAN IN CONNECTION WITH A DEFINITELY RELATED GOVERNMENT PROCUREMENT OPERATION, THE UNITED STATES GOVERNMENT THEREBY INCURS NO RESPONSIBILITY NOR ANY OBLIGATION WHATSOEVER; AND THE FACT THAT THE GOVERNMENT MAY HAVE FORMULATED, FURNISHED, OR IN ANY WAY SUPPLIED THE SAID DRAWINGS, SPECIFICATIONS OR ANY OTHER DATA IS NOT TO BE REGARDED BY IMPLICATION OR OTHERWISE AS IN ANY MANNER LICENSING THE HOLDER OR ANY OTHER PERSONS OR CORPORATION, OR CONVEYING ANY RIGHTS OF PROPRIETOR TO MAY PATENT PROCURE, USE, OR SELL ANY PATENTED INVENTION THAT IN ANY WAY BE RELATED THERETO.

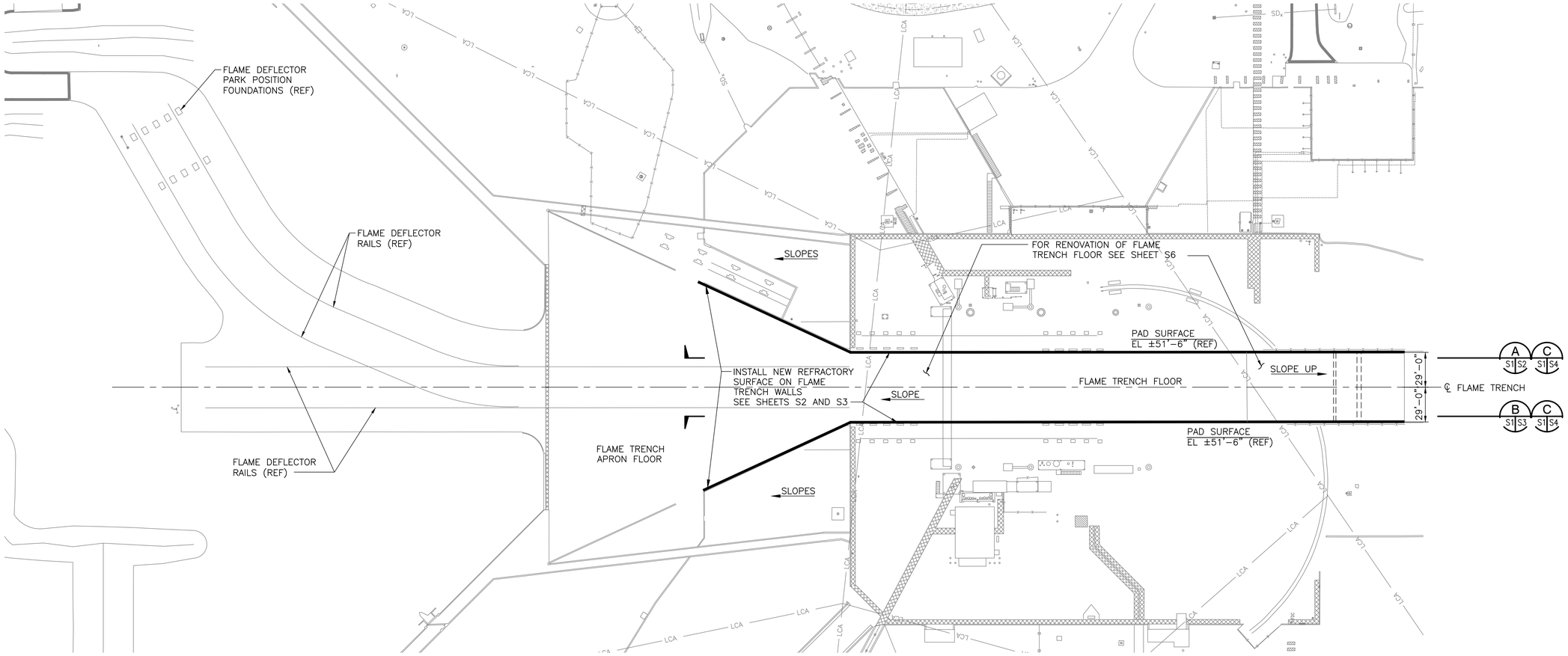


N

## FLAME TRENCH AREA - OVERALL PLAN

SCALE: 1"=40'

## NOTES:

1. THE CONTRACT DRAWINGS CONTAIN INFORMATION FROM EXISTING RECORD DRAWINGS RETRIEVED FROM SEVERAL PRIOR DESIGN PACKAGES. MODIFICATIONS TO THE DRAWINGS HAVE BEEN MADE FOR THE PURPOSE OF CLARIFYING THE SIZES AND LENGTHS OF STRUCTURAL MEMBERS AND IDENTIFYING CONTRACT SCOPE. CONTRACTOR IS RESPONSIBLE FOR FIELD VERIFYING THAT ACTUAL CONDITIONS MATCH THE CONTRACT DRAWINGS. CONTRACTOR SHALL HAVE SOLE RESPONSIBILITY FOR REVIEWING AND CHECKING ALL INFORMATION CONTAINED IN THE CONTRACT DRAWINGS AND FOR ANY INTERPRETATION OR CONCLUSION DRAWN FROM THE INFORMATION PROVIDED.

2. LENGTHS AND QUANTITIES MAY BE SHOWN ON THE DRAWINGS, HOWEVER THE CONTRACTOR IS SOLELY RESPONSIBLE FOR DETERMINING ALL MATERIAL QUANTITIES IN ACCORDANCE WITH THE CONTRACT DOCUMENTS PRIOR TO BIDDING.

3. THE CONTRACTOR SHALL VERIFY ALL CLEARANCES AND PLAN THE WORK WITHIN THE AVAILABLE CLEARANCES.

4. CONTRACTOR SHALL NOT CLOSE OR OBSTRUCT STREETS, WALKS, OR OTHER ADJACENT OCCUPIED OR IN-USE FACILITIES WITHOUT PERMISSION FROM THE CONTRACTING OFFICER. PROVIDE ALTERNATE ROUTES AROUND CLOSED OR OBSTRUCTED TRAFFIC WAYS.

5. CONTRACTOR IS REQUIRED TO POLICE WORK AREAS DAILY FOR LOOSE TRASH AND DEBRIS. WIND BLOWN DEBRIS MUST BE COLLECTED DAILY AND PROPERLY DISPOSED OF TO PREVENT MIGRATION OF DEBRIS/TRASH OFFSITE.

6. THE CONTRACTOR SHALL UTILIZE WHATEVER MEANS NECESSARY TO PROTECT THE EXISTING EQUIPMENT, FLOOR, SURFACES AND STRUCTURES. THE CONTRACTOR SHALL BE RESPONSIBLE FOR REPAIRING ANY DAMAGE TO EXISTING EQUIPMENT, FLOOR, SURFACES, UTILITIES, STRUCTURES AND OTHER FEATURES INCLUDING ROADWAYS AND FACILITY CONCRETE APRONS AT NO ADDITIONAL COST TO THE GOVERNMENT.

7. THE CONTRACTOR SHALL BE RESPONSIBLE FOR BRACING, SHORING, OR PROVIDING OTHER MEANS NECESSARY TO PROTECT AND SUPPORT EXISTING STRUCTURES DURING CONSTRUCTION.

8. ALL EXISTING STORMWATER DRAINAGE PATTERNS AND CHANNELS SHALL BE MAINTAINED. THE CONTRACTOR SHALL NOTIFY THE CONTRACTING OFFICER IF WORK APPEARS TO INTERRUPT AN EXISTING STORMWATER DRAINAGE PATTERN. THE CONTRACTOR SHALL BE RESPONSIBLE FOR RESTORING ANY DISTURBED FOUNDATIONS AND IMPACT TO STRUCTURES AND ANY OTHER DAMAGE TO CHANNELS AND DRAINAGE PATTERNS CAUSED DURING CONSTRUCTION.

9. CONTRACTOR SHALL PREVENT THE DISCHARGE OF SEDIMENT INTO DRAINAGE DITCHES OR TRENCHES DUE TO OPERATIONS. APPROVED EROSION CONTROL DEVICES SHALL BE INSTALLED TO PREVENT DISCHARGE OF SEDIMENT INTO A DRY OR WET WATERCOURSE. EROSION CONTROL SHALL CONSIST OF MULCH AND NETTING, FILTER CLOTH BARRIERS OR OTHER EROSION CONTROL METHODS APPROVED BY THE CONTRACTING OFFICER.

10. ALL CONSTRUCTION DEBRIS SHALL BE REMOVED FROM THE SITE WITHIN 5 WORK DAYS AND DISPOSED OF BY THE CONTRACTOR.

11. NO STAGING, DISMANTLING, OR CUTTING WILL BE PERMITTED OUTSIDE THE LIMITS OF CONSTRUCTION AT THE PAD AND PERMITTED LAYDOWN AREAS.

12. EXISTING CORED HOLES OR ABANDONED DRILL HOLES IN CONCRETE WALLS SHALL BE FILLED WITH NON-SHRINK GROUT BEFORE INSTALLING REFRACTORY MATERIALS. DAMAGED OR UNEVEN CONCRETE WALL SURFACE SHALL BE LEVELED WITH BONDING MORTAR (GROUT), DURING REFRACTORY MATERIAL PLACEMENT. ALL EXPOSED METAL PARTS SHALL BE COATED WITH EPOXY MASTIC.

13. ALL ELEVATIONS SHOWN ON DRAWINGS ARE FOR REFERENCE ONLY. THE CONTRACTOR IS TO VERIFY ELEVATIONS BEFORE PROCEEDING WITH INSTALLATION OF REFRACTORY MATERIALS.

40 20 0 40 80

1 IN = 40 FT

WHEN PRINTED FULL SIZE, THIS SHEET IS 28"X40"
THIS COMPUTER DRAWING WAS
CREATED IN AUTOCAD AND
FILED UNDER THE DRAWING NUMBER

S1

| SYM | ZONE | DESCRIPTION | DATE | APPROVAL |
|---|---|---|---|---|
| | | REVISIONS | | |

RS&H IMPROVING YOUR WORLD

Reynolds, Smith and Hills, Inc.
115 Alma Blvd, Suite 101
Merritt Island, Florida 32953
(321) 453-0212 (321) 453-0223 FAX
www.rsandh.com

| SIGNATURES | | DATE |
|---|---|---|
| DRAWN: | J. HAUER | 08/5/14 |
| CHECKED: | B. LYTLE | 08/5/14 |
| SUBMITTED: | | |
| A or E of RECORD: | J. BALMER | |
| ST OF LICENSURE: FL LICENSE NO: | 54670 | |
| APPROVED: | | |
| A&E DISCPLIN DEPT HD: | A. PATEL | |
| NASA SYS/LDE: | M. HARTNETT | |

NATIONAL AERONAUTICS AND SPACE ADMINISTRATION
JOHN F. KENNEDY SPACE CENTER, NASA
KENNEDY SPACE CENTER, FLORIDA

LAUNCH COMPLEX 39
LAUNCH PAD 39B

# REFURBISH AND MODIFY FLAME TRENCH FLAME TRENCH PLAN

| FILE NO. | SIZE | DWG. NO. | REV |
|---|---|---|---|
| 302-6058-051 | F | 79K39723 | |

PROJ. NO. PCN 98948 SHEET 4 OF

KSC FORM 1-11 (REV. 3/76) (CG 3/93)

NOTICE -- WHEN GOVERNMENT DRAWINGS, SPECIFICATIONS, OR OTHER DATA ARE USED FOR ANY PURPOSE OTHER THAN IN CONNECTION WITH A DEFINITELY RELATED GOVERNMENT PROCUREMENT OPERATION, THE UNITED STATES GOVERNMENT THEREBY INCURS NO RESPONSIBILITY NOR ANY OBLIGATION WHATSOEVER; AND THE FACT THAT THE GOVERNMENT MAY HAVE FORMULATED, FURNISHED, OR IN ANY WAY SUPPLIED THE SAID DRAWINGS, SPECIFICATIONS OR ANY OTHER DATA IS NOT TO BE REGARDED BY IMPLICATION OR OTHERWISE IN ANY MANNER CONSTRUED, AS LICENSING THE HOLDER, OR ANY OTHER PERSONS OR CORPORATION; OR CONVEYING ANY RIGHTS OR PERMISSION TO MANUFACTURE, USE, OR SELL ANY PATENTED INVENTION THAT IN ANY WAY BE RELATED THERETO.

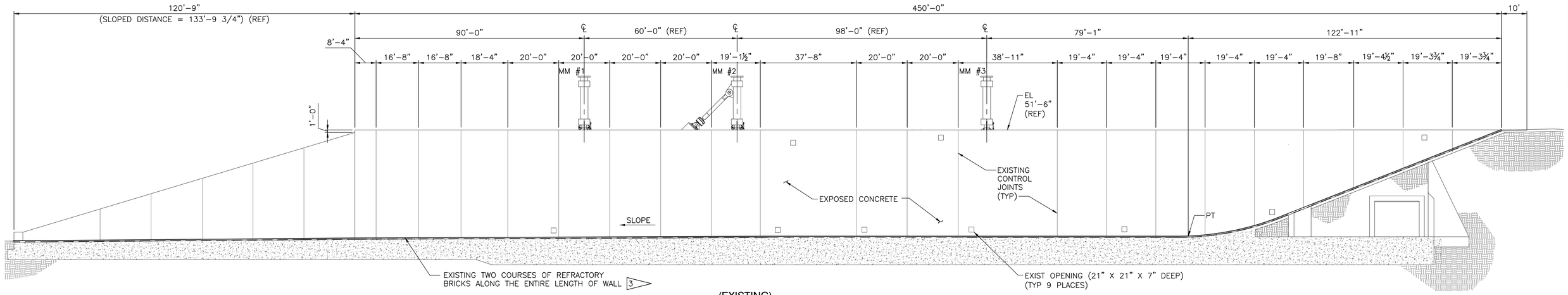


N

(EXISTING)
EAST WALL ELEVATION A S1 S2
SCALE: 1/16"=1'-0"

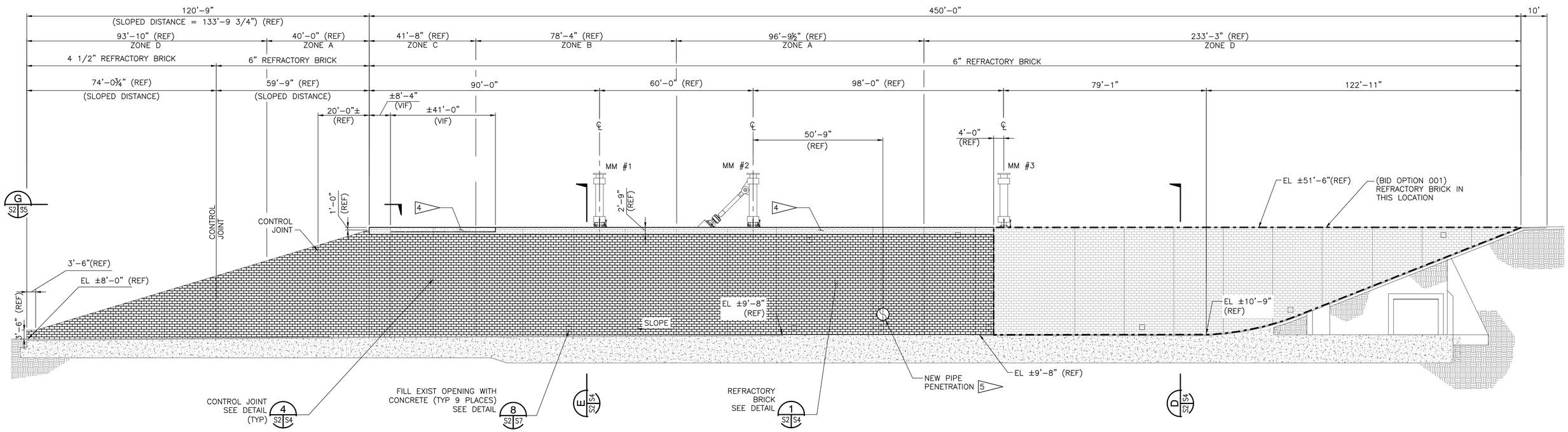


(FLAME DEFLECTOR NOT SHOWN FOR CLARITY)

N

(MODIFIED)
EAST WALL ELEVATION A S1 S2 5
SCALE: 1/16"=1'-0"

| ZONE | BRICK ANCHOR REQUIREMENTS |
|---|---|
| A | ANCHOR EVERY BRICK ON EVERY THIRD COURSE |
| B | ANCHOR EVERY BRICK ON EVERY FOURTH COURSE |
| C | ANCHOR EVERY OTHER BRICK ON EVERY THIRD COURSE |
| D | ANCHOR EVERY OTHER BRICK ON EVERY FOURTH COURSE |

NOTE: FOR BOND BRICK DETAILS SEE S7.

## NOTES:

1. FOR GENERAL NOTES SEE SHEETS V2 AND S1.
2. TYPICAL EXPOSED DOVETAIL INSERTS USED FOR ORIGINAL BRICK SUPPORTS SEE DETAIL 3 S2 S4 AND ELEV C S1 S4

3 BOTTOM TWO COURSES OF BRICKS ALONG THE ENTIRE LENGTH OF THE WALL INCLUDING FIREPROOF FILLER SHALL BE REMOVED BEFORE INSTALLATION OF NEW WALL BRICKS. CONTRACTOR SHALL NOT DAMAGE THE ADJOINING BRICKS OR CONCRETE ON THE FLOOR.

4 SEE DRAWING 79K39355 FOR MODIFICATION OF CONCRETE CURB AND RAILS AND INSTALLATION OF REFRACTORY BRICK IN THIS AREA.

5 SEE DRAWING 79K39355 FOR OTHER MODIFICATIONS TO FLAME TRENCH WALLS AND CONSTRUCTION OF FLAME DEFLECTOR.

6. FOR DETAILS OF BRICK PATTERN AND BRICK ANCHORAGE SEE S4.

8 0 8 16 24 32 40
1/16 IN = 1 FT

WHEN PRINTED FULL SIZE, THIS SHEET IS 28"X40"
THIS COMPUTER DRAWING WAS CREATED IN AUTOCAD AND FILED UNDER THE DRAWING NUMBER

S2

| SYM | ZONE | DESCRIPTION | DATE | APPROVAL |
|---|---|---|---|---|
| | | REVISIONS | | |

RS&H IMPROVING YOUR WORLD
Reynolds, Smith and Hills, Inc.
115 Alma Blvd, Suite 101
Merritt Island, Florida 32953
(321) 453-0212 (321) 453-0223 FAX
www.rsandh.com

| SIGNATURES | | DATE |
|---|---|---|
| DRAWN: | J. HAUER | 08/5/14 |
| CHECKED: | B. LYTLE | 08/5/14 |
| SUBMITTED: | | |
| A or E of RECORD: | J. BALMER | |
| ST OF LICENSURE: | FL | |
| LICENSE NO: | 54670 | |
| APPROVED: | | |
| A&E DISCPLN DEPT HD: | A. PATEL | |
| NASA SYS/LDE: | M. HARTNETT | |

NATIONAL AERONAUTICS AND SPACE ADMINISTRATION
JOHN F. KENNEDY SPACE CENTER, NASA
KENNEDY SPACE CENTER, FLORIDA

LAUNCH COMPLEX 39
LAUNCH PAD 39B
# REFURBISH AND MODIFY FLAME TRENCH EAST WALL MODIFICATIONS

| FILE NO. | SIZE | DWG. NO. | REV |
|---|---|---|---|
| 302-6058-051 | F | 79K39723 | |

PROJ. NO. PCN 98948 SHEET 5 OF

KSC FORM 1-11 (REV. 3/76) (CG 3/93)

NOTICE -- WHEN GOVERNMENT DRAWINGS, SPECIFICATIONS, OR OTHER DATA ARE USED FOR ANY PURPOSE OTHER THAN IN CONNECTION WITH A DEFINITELY RELATED GOVERNMENT PROCUREMENT OPERATION, THE UNITED STATES GOVERNMENT THEREBY INCURS NO RESPONSIBILITY NOR ANY OBLIGATION WHATSOEVER; AND THE FACT THAT THE GOVERNMENT MAY HAVE FORMULATED, FURNISHED, OR IN ANY WAY SUPPLIED THE SAID DRAWINGS, SPECIFICATIONS OR ANY OTHER DATA IS NOT TO BE REGARDED BY IMPLICATION OR OTHERWISE IN ANY MANNER LICENSING THE HOLDER OR ANY OTHER PERSONS OR CORPORATION OR CONVEYING ANY RIGHTS OR PERMISSION TO MANUFACTURE, USE, OR SELL ANY PATENTED INVENTION THAT IN ANY WAY BE RELATED THERETO.

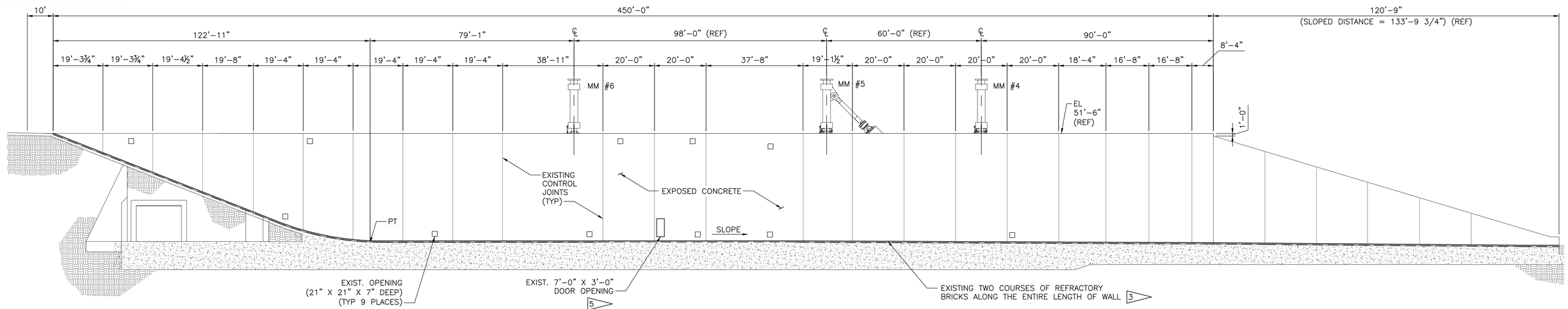


—N→ (EXISTING) WEST WALL ELEVATION (B) S1 S3
SCALE: 1/16"=1'-0"

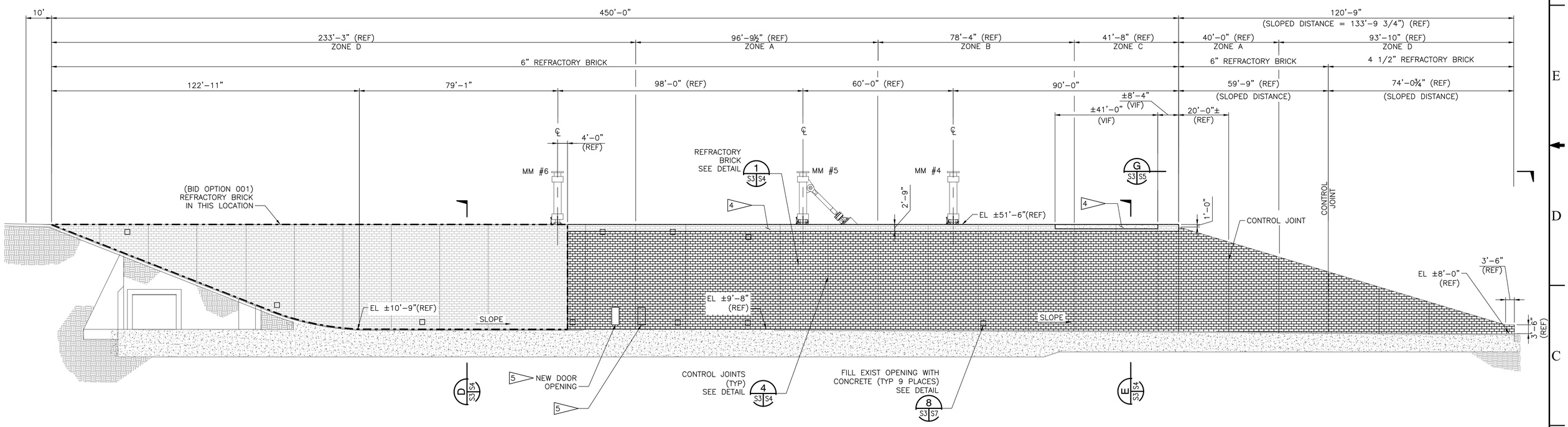


(FLAME DEFLECTOR NOT SHOWN FOR CLARITY)

—N→ (MODIFIED) WEST WALL ELEVATION (B) S1 S3 5
SCALE: 1/16"=1'-0"

| ZONE | BRICK ANCHOR REQUIREMENTS |
|---|---|
| A | ANCHOR EVERY BRICK ON EVERY THIRD COURSE |
| B | ANCHOR EVERY BRICK ON EVERY FOURTH COURSE |
| C | ANCHOR EVERY OTHER BRICK ON EVERY THIRD COURSE |
| D | ANCHOR EVERY OTHER BRICK ON EVERY FOURTH COURSE |

NOTE: FOR BOND BRICK DETAILS SEE S7.

## NOTES:

1. FOR GENERAL NOTES SEE SHEETS V2 AND S1.
2. TYPICAL EXPOSED DOVETAIL INSERTS USED FOR ORIGINAL BRICK SUPPORTS SEE DETAIL 3 S3 S4 AND ELEV C S1 S4
3. BOTTOM TWO COURSES OF BRICKS ALONG THE ENTIRE LENGTH OF THE WALL INCLUDING FIREPROOF FILLER SHALL BE REMOVED BEFORE INSTALLATION OF NEW WALL BRICKS. CONTRACTOR SHALL NOT DAMAGE THE ADJOINING BRICKS OR CONCRETE ON THE FLOOR.
4. SEE DRAWING 79K39355 FOR MODIFICATION OF CONCRETE CURB AND RAILS AND INSTALLATION OF REFRACTORY BRICK IN THIS AREA.
5. SEE DRAWING 79K39355 FOR OTHER MODIFICATIONS TO FLAME TRENCH WALLS AND CONSTRUCTION OF FLAME DEFLECTOR.
6. FOR DETAILS OF BRICK PATTERN AND BRICK ANCHORAGE SEE S4.

8 0 8 16 24 32 40
1/16 IN = 1 FT

WHEN PRINTED FULL SIZE, THIS SHEET IS 28"X40"
THIS COMPUTER DRAWING WAS CREATED IN AUTOCAD AND FILED UNDER THE DRAWING NUMBER

S3

| SYM | ZONE | DESCRIPTION | DATE | APPROVAL |
|---|---|---|---|---|
| | | REVISIONS | | |

RS&H IMPROVING YOUR WORLD
Reynolds, Smith and Hills, Inc.
115 Alma Blvd, Suite 101
Merritt Island, Florida 32953
(321) 453-0212 (321) 453-0223 FAX
www.rsandh.com

| SIGNATURES | | DATE |
|---|---|---|
| DRAWN: | J. HAUER | 08/5/14 |
| CHECKED: | B. LYTLE | 08/5/14 |
| SUBMITTED: | | |
| A or E of RECORD: | J. BALMER | |
| ST OF LICENSURE: FL LICENSE NO: | 54670 | |
| APPROVED: | | |
| A&E DISCPLIN DEPT HD: | A. PATEL | |
| NASA SYS.LDE: | M. HARTNETT | |

NATIONAL AERONAUTICS AND SPACE ADMINISTRATION
JOHN F. KENNEDY SPACE CENTER, NASA
KENNEDY SPACE CENTER, FLORIDA

LAUNCH COMPLEX 39
LAUNCH PAD 39B

# REFURBISH AND MODIFY FLAME TRENCH WEST WALL MODIFICATIONS

| FILE NO. | SIZE | DWG. NO. | REV |
|---|---|---|---|
| 302-6058-051 | F | 79K39723 | |

PROJ. NO. PCN 98948 SHEET 6 OF

KSC FORM 1-11 (REV. 3/76) (CIG 3/93)

NOTICE -- WHEN GOVERNMENT DRAWINGS, SPECIFICATIONS, OR OTHER DATA ARE USED FOR ANY PURPOSE OTHER THAN IN CONNECTION WITH A DEFINITELY RELATED GOVERNMENT PROCUREMENT OPERATION, THE UNITED STATES GOVERNMENT THEREBY INCURS NO RESPONSIBILITY NOR ANY OBLIGATION WHATSOEVER; AND THE FACT THAT THE GOVERNMENT MAY HAVE FORMULATED, FURNISHED, OR IN ANY WAY SUPPLIED THE SAID DRAWINGS, SPECIFICATIONS OR ANY OTHER DATA IS NOT TO BE REGARDED BY IMPLICATION, OR OTHERWISE AS IN ANY MANNER LICENSING THE HOLDER OR ANY OTHER PERSONS OR CORPORATION, OR CONVEYING ANY RIGHTS OR PERMISSION TO MANUFACTURE, USE, OR SELL ANY PATENTED INVENTION THAT IN ANY WAY BE RELATED THERETO.

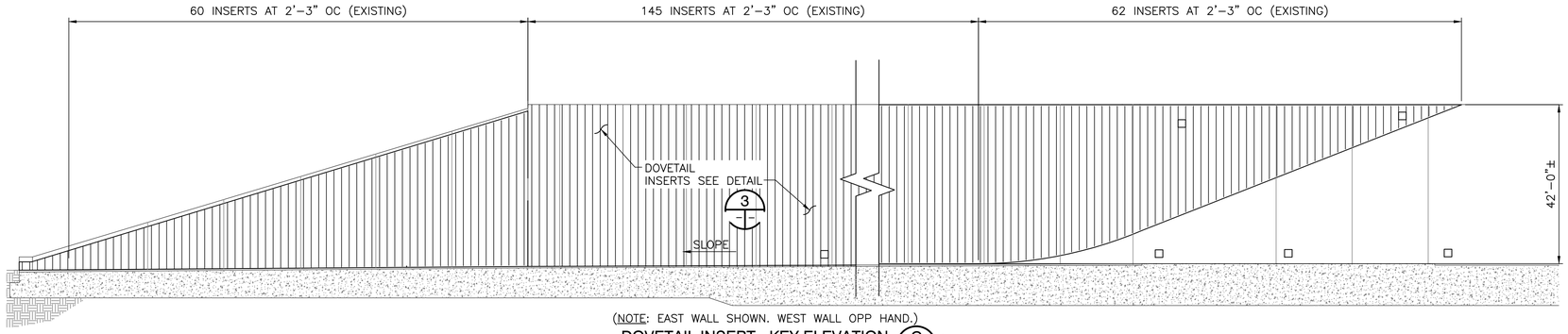


(NOTE: EAST WALL SHOWN. WEST WALL OPP HAND.)

N

DOVETAIL INSERT - KEY ELEVATION (C) S1 S4 S2 S3 [8]

SCALE: 1/16" = 1'-0"

## NOTES:

1. FOR GENERAL NOTES SEE SHEETS V2 AND S1.
2. FOR THE BRICK PAVEMENT ON FLOORS AND SOUTH RAMP SURFACE, SEE SHEET S6.
3. PROVIDE NEW STAINLESS STEEL TYPE 316 PLATE ANCHOR, AS SHOWN ON S7.
4. EXISTING DOVETAIL INSERTS SHALL BE REMOVED AS SHOWN IN DETAIL 3. FIELD CONDITION OF CONCRETE AROUND INSERT VARIES. DO NOT DAMAGE EXISTING REBAR IN THE WALL DURING REMOVAL ACTIVITY. SEE BOND BRICK TYPE DETAILS, S7, FOR ADDITIONAL DEMOLITION AT EACH PLATE ANCHOR.
5. HIGH TEMPERATURE ROPE SEAL TO BE ⅜" BEADED SQUARE.
6. THE GENERAL CONTRACTOR SHALL COORDINATE THE INSTALLATION OF THE REFRACTORY BRICK WITH THE INSTALLATION OF THE NEW RAIL FRAMING STEEL (REF DWG 79K39355).
7. THE CONTRACTOR SHALL TAKE PRECAUTIONS NOT TO DAMAGE THE EXISTING BRICKS OR CONCRETE ON THE FLOOR.
8. THE CONDITIONS PRESENTED ON THIS SHEET REFLECT THE AS-BUILT CONDITION PRIOR TO PLACEMENT OF THE ORIGINAL BRICK LINING. THIS ORIGINAL BRICK LINING IS DEMOLISHED. THE CONTRACTOR SHALL MAKE NOTE OF POST-DEMOLITION CONDITIONS OF THE STRUCTURE. THE CONTRACTOR SHALL ACCOUNT FOR THE ACTUAL FIELD CONDITION AND HOW HIS QUANTITIES ARE IMPACTED.
9. SEE S7 FOR ADDITIONAL BOND BRICK DETAILS.
10. ANY EXPOSED METAL PARTS SHALL BE COATED WITH EPOXY MASTIC BEFORE PLACING GROUT, CONCRETE OR BRICKS.

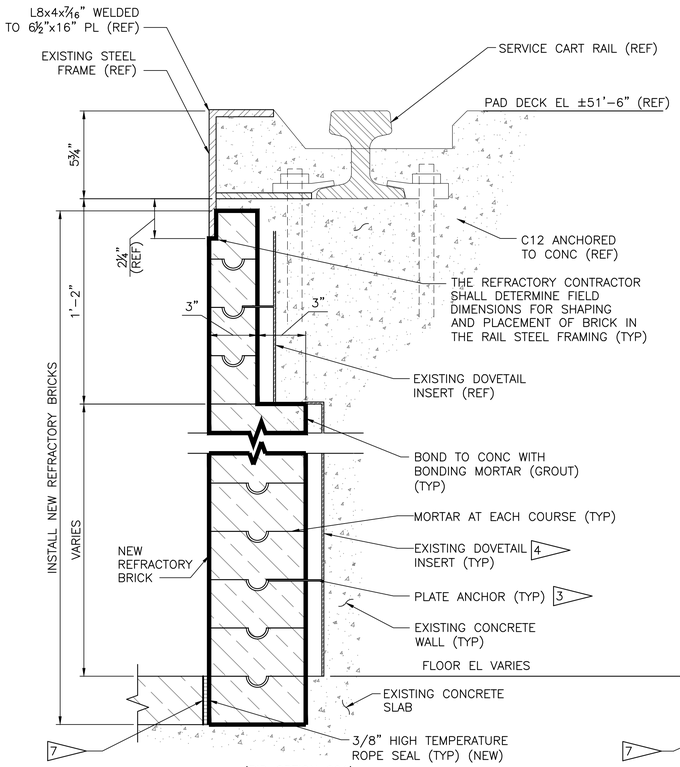


(BID OPTION 001)

TYPICAL WALL SECTION (D) S2 S4 S3

SCALE: 3"=1'-0"

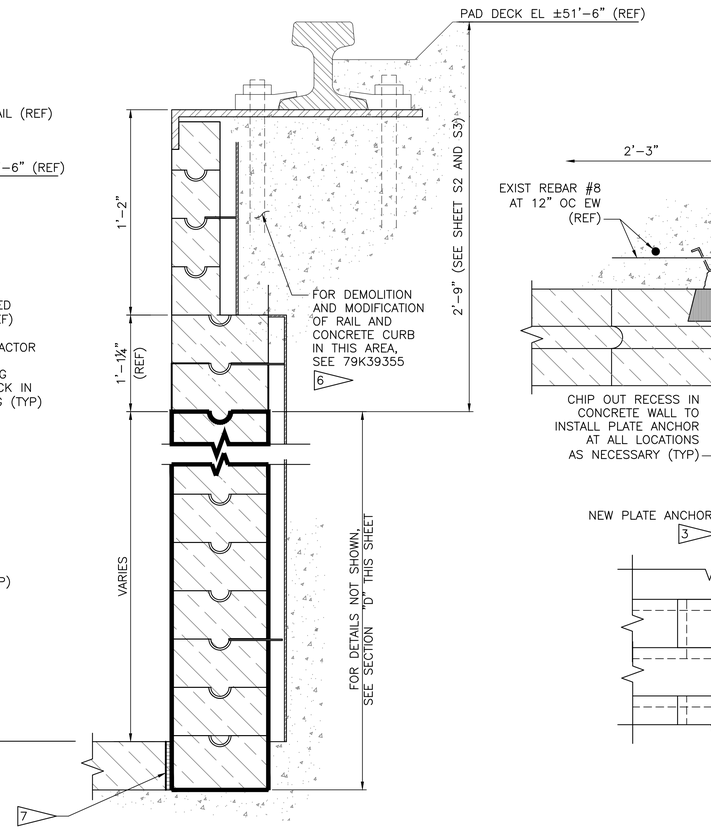


TYPICAL WALL SECTION (E) S2 S4 S3

SCALE: 3"=1'-0"

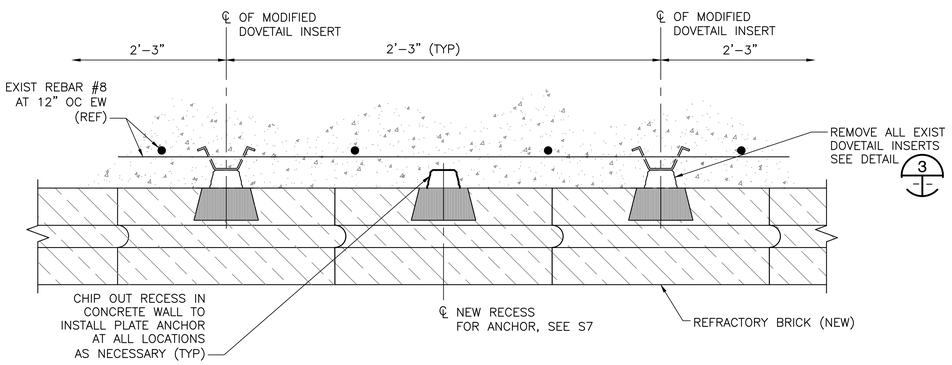


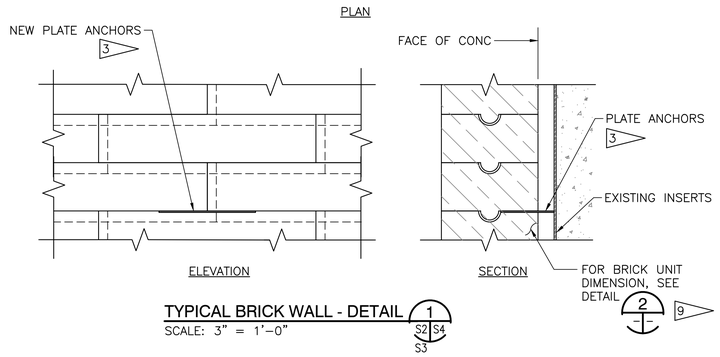


TYPICAL BRICK WALL - DETAIL (1) S2 S4 S3

SCALE: 3" = 1'-0"

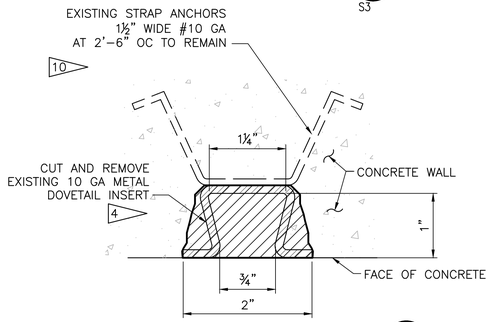


TYPICAL DOVETAIL INSERT - DETAIL (3) S2 S3

SCALE: 12"=1'-0"

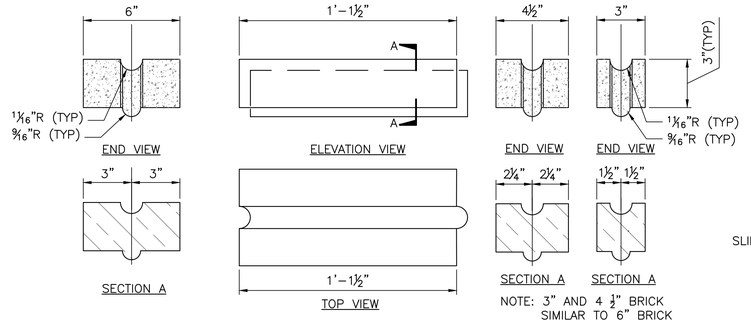


NOTE: 3" AND 4½" BRICK SIMILAR TO 6" BRICK

REFRACTORY BRICK FOR WALL SURFACE DETAIL (2) 9

SCALE: 3"=1'-0"

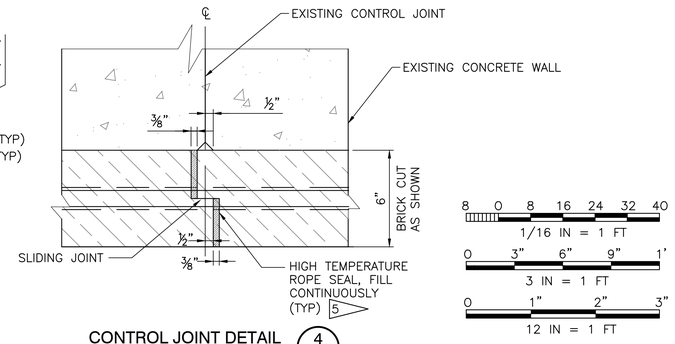


CONTROL JOINT DETAIL (4) S2 S4 S3 S5

SCALE: 3"=1'-0"




WHEN PRINTED FULL SIZE, THIS SHEET IS 28"X40" THIS COMPUTER DRAWING WAS CREATED IN AUTOCAD AND FILED UNDER THE DRAWING NUMBER

S4

| SYM | ZONE | DESCRIPTION | DATE | APPROVAL |
|---|---|---|---|---|
| | | REVISIONS | | |

RS&H IMPROVING YOUR WORLD

Reynolds, Smith and Hills, Inc.
115 Alma Blvd, Suite 101
Merritt Island, Florida 32953
(321) 453-0212 (321) 453-0223 FAX
www.rsandh.com

| SIGNATURES | | DATE |
|---|---|---|
| DRAWN: | J. HAUER | 08/5/14 |
| CHECKED: | B. LYTLE | 08/5/14 |
| SUBMITTED: | | |
| A or E of RECORD: | J. BALMER | |
| ST OF LICENSURE: | FL | |
| LICENSE NO: | 54670 | |
| APPROVED: | | |
| A&E DISCPLIN DEPT HD: | A. PATEL | |
| NASA SYS/LDR: | M. HARTNETT | |

NATIONAL AERONAUTICS AND SPACE ADMINISTRATION
JOHN F. KENNEDY SPACE CENTER, NASA
KENNEDY SPACE CENTER, FLORIDA

LAUNCH COMPLEX 39
LAUNCH PAD 39B

# REFURBISH AND MODIFY FLAME TRENCH REFRACTORY BRICK DETAILS

| FILE NO. | SIZE | DWG. NO. | REV |
|---|---|---|---|
| 302-6058-051 | F | 79K39723 | |

PROJ. NO. PCN 98948 SHEET 7 OF

KSC FORM 1-11 (REV. 3/76) (C/G 3/93)

NOTICE -- WHEN GOVERNMENT DRAWINGS, SPECIFICATIONS, OR OTHER DATA ARE USED FOR ANY PURPOSE OTHER THAN IN CONNECTION WITH A DEFINITELY RELATED GOVERNMENT PROCUREMENT OPERATION, THE UNITED STATES GOVERNMENT THEREBY INCURS NO RESPONSIBILITY NOR ANY OBLIGATION WHATSOEVER; AND THE FACT THAT THE GOVERNMENT MAY HAVE FORMULATED, FURNISHED, OR IN ANY WAY SUPPLIED THE SAID DRAWINGS, SPECIFICATIONS OR ANY OTHER DATA IS NOT TO BE REGARDED BY IMPLICATION OR OTHERWISE AS IN ANY MANNER LICENSING THE HOLDER OR ANY OTHER PERSONS OR CORPORATIONS, OR CONVEYING ANY RIGHTS OF PROPRIETORSHIP TO ANY MANUFACTURE, USE, OR SELL ANY PATENTED INVENTION THAT IN ANY WAY BE RELATED THERETO.

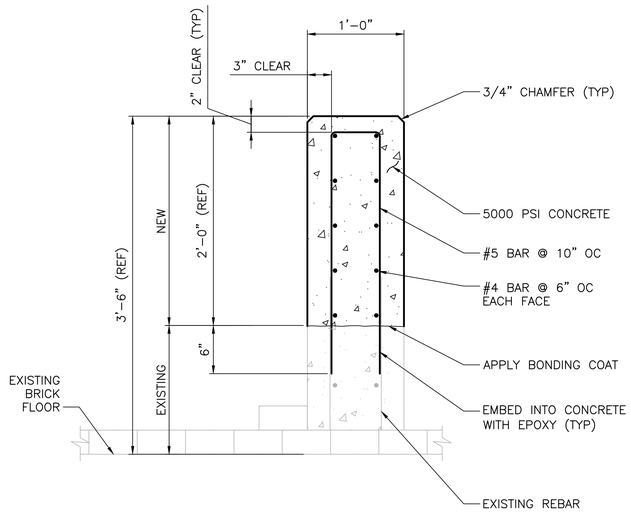


## NOTES:

1. CUT AND REMOVE PORTION OF SPALLED CONCRETE WING WALL AS SHOWN.
2. REMOVE ALL LOOSE MATERIAL. CLEAN THE SURFACE.
3. EMBED NEW REBARS AS SHOWN.
4. FORM AND INSTALL 4000 PSI CONCRETE (MIN).
5. FINISH THE SURFACES TO MATCH EXISTING WALL.

**SECTION L**
SCALE: NTS

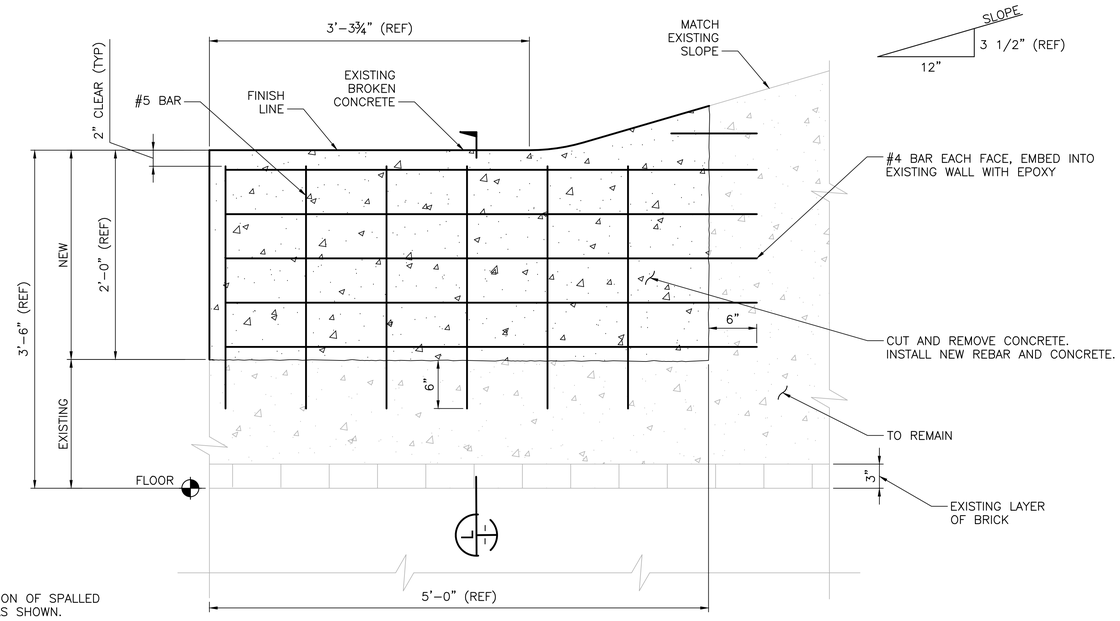


(EAST WING WALL ONLY)

**EAST WING WALL REPAIR F**
SCALE: NTS

## NOTES:

1. FOR GENERAL NOTES SEE SHEETS V2 AND S1.
2. THE CONTRACTOR SHALL ARRANGE FOR AN ANCHOR MANUFACTURER'S REPRESENTATIVE TO PROVIDE ONSITE INSTALLATION TRAINING FOR ALL OF THEIR ANCHORING PRODUCTS SPECIFIED. SUBMIT CONFIRMATION THAT ALL OF THE CONTRACTOR'S PERSONNEL WHO INSTALL ANCHORS ARE TRAINED PRIOR TO THE COMMENCEMENT OF INSTALLING ANCHORS TO CONTRACTING OFFICER FOR APPROVAL.
3. EXISTING REINFORCING BARS IN THE CONCRETE STRUCTURE MAY CONFLICT WITH SPECIFIC ANCHOR LOCATIONS. THE CONTRACTOR SHALL OFFSET WHERE REQUIRED A MAXIMUM OF 1". THE CONTRACTOR SHALL NOT DAMAGE EXISTING REINFORCEMENT. THE CONTRACTOR SHALL FIELD LOCATE THE POSITION OF THE REINFORCING BARS AT THE INTENDED LOCATIONS OF THE CONCRETE ANCHORS, BY REBAR LOCATOR, GROUND PENETRATING RADAR, OR OTHER APPROVED MEANS.

4 Y-ANCHOR 5/16" DIA, STAINLESS STEEL TYPE 310 WITH 3/8" DIA EXPANSION ANCHOR. PROVIDE STAINLESS STEEL TYPE 316 NUT ABOVE AND BELOW Y-ANCHOR. PROVIDE NYLON WASHERS AGAINST THE Y-ANCHOR AND PROVIDE STANDARD STAINLESS STEEL TYPE 316 FLAT WASHERS AGAINST THE NUTS. INSTALL OUTERMOST NUT USING A THREAD LOCKING COMPOUND.

5. PREPARE CONCRETE SURFACE PER SSPC-SP 13 PRIOR TO PLACING REFRACTORY CONCRETE.

6 FILL GAP BETWEEN BENT PLATE AND TOP OF BRICK OR CONCRETE WITH MORTAR.

7 THE CONCRETE EXPANSION ANCHOR SHALL BE 3/8 INCH DIA, SST TYPE 316, MINIMUM EMBEDMENT OF 2 7/8 INCH AND SHALL HAVE MINIMUM TENSILE STRENGTH OF 98 KSI AND MINIMUM PULL-OUT STRENGTH IN UNCRACKED CONCRETE OF 3400 LB PER ICC-ES EVALUATION REPORT FOR THE ANCHOR PER APPENDIX D OF ACI 318-11. INSTALL PER MANUFACTURER'S RECOMMENDATIONS.

8 THE CONCRETE EXPANSION ANCHOR SHALL BE 5/8 INCH DIA, HDG CARBON STEEL, MINIMUM EMBEDMENT OF 4 1/2 INCH AND SHALL HAVE MINIMUM PULL-OUT STRENGTH IN UNCRACKED CONCRETE OF 6000 LB PER ICC-ES EVALUATION REPORT FOR THE ANCHOR PER APPENDIX D OF ACI 318-11. INSTALL PER MANUFACTURER'S RECOMMENDATIONS.

9. FOR CONCRETE, STRUCTURAL STEEL AND COATINGS SEE PROJECT SPECIFICATIONS.

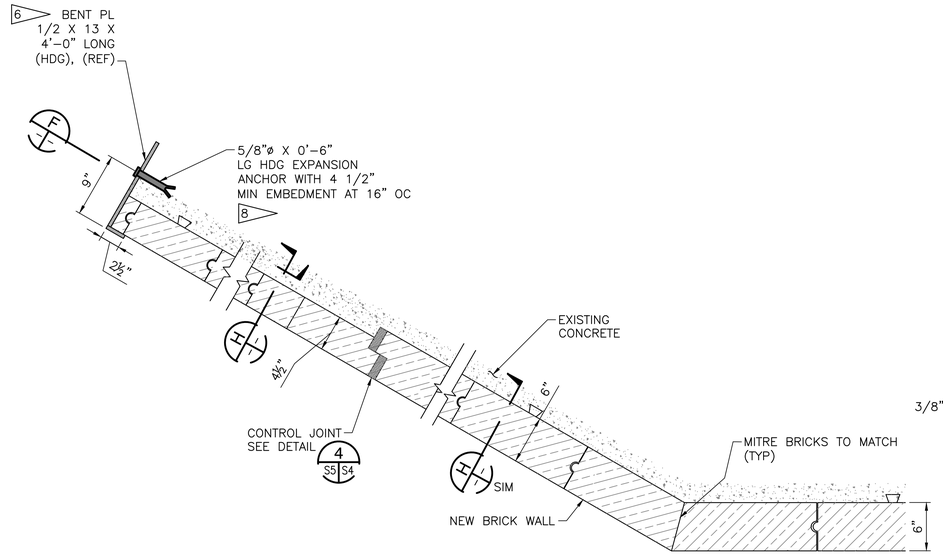


NOTE: EAST WING WALL SHOWN. WEST WING WALL OPP HAND.

**WINGWALL SECTION G**
SCALE: 1 1/2"=1'-0"

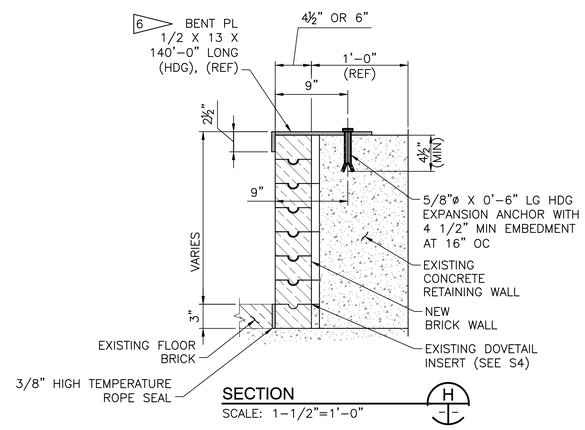


**SECTION H**
SCALE: 1-1/2"=1'-0"

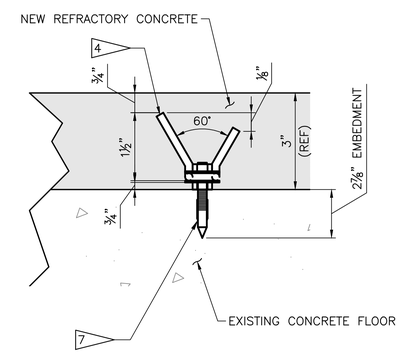


**Y-ANCHOR ATTACHMENT DETAIL ON FLOOR 5**
SCALE: NTS

1 9" 6" 3" 0 1
1 1/2 IN = 1 FT

WHEN PRINTED FULL SIZE, THIS SHEET IS 28"X40"
THIS COMPUTER DRAWING WAS CREATED IN AUTOCAD AND FILED UNDER THE DRAWING NUMBER

S5

| SYM | ZONE | DESCRIPTION | DATE | APPROVAL |
|---|---|---|---|---|
| | | REVISIONS | | |

RS&H IMPROVING YOUR WORLD
Reynolds, Smith and Hills, Inc.
115 Alma Blvd, Suite 101
Merritt Island, Florida 32953
(321) 453-0212 (321) 453-0223 FAX
www.rsandh.com

| SIGNATURES | | DATE |
|---|---|---|
| DRAWN: | J. HAUER | 08/5/14 |
| CHECKED: | B. LYTLE | 08/5/14 |
| SUBMITTED: | | |
| A or E of RECORD: | J. BALMER | |
| ST OF LICENSURE: FL LICENSE NO: | 54670 | |
| APPROVED: | | |
| A&E DISCPLN DEPT HD: | A. PATEL | |
| NASA SYS/LDE: | M. HARTNETT | |

NATIONAL AERONAUTICS AND SPACE ADMINISTRATION
JOHN F. KENNEDY SPACE CENTER, NASA
KENNEDY SPACE CENTER, FLORIDA

LAUNCH COMPLEX 39
LAUNCH PAD 39B

# REFURBISH AND MODIFY FLAME TRENCH REFRACTORY CONCRETE AND REFRACTORY BRICK DETAILS

| FILE NO. | SIZE | DWG. NO. | REV |
|---|---|---|---|
| 302-6058-051 | F | 79K39723 | |

PROJ. NO. PCN 98948 SHEET 8 OF

KSC FORM 1-11 (REV. 3/76) (C/G 3/93)

NOTICE -- WHEN GOVERNMENT DRAWINGS, SPECIFICATIONS, OR OTHER DATA ARE USED FOR ANY PURPOSE OTHER THAN IN CONNECTION WITH A DEFINITELY RELATED GOVERNMENT PROCUREMENT OPERATION, THE UNITED STATES GOVERNMENT THEREBY INCURS NO RESPONSIBILITY NOR ANY OBLIGATION WHATSOEVER; AND THE FACT THAT THE GOVERNMENT MAY HAVE FORMULATED, FURNISHED, OR IN ANY WAY SUPPLIED THE SAID DRAWINGS, SPECIFICATIONS OR ANY OTHER DATA IS NOT TO BE REGARDED BY IMPLICATION, OR OTHERWISE IN ANY MANNER CONSTRUED, AS LICENSING THE HOLDER, OR ANY OTHER PERSONS OR CORPORATIONS, OR CONVEYING ANY RIGHTS OR PERMISSION TO MANUFACTURE, USE, OR SELL ANY PATENTED INVENTION THAT IN ANY WAY BE RELATED THERETO.

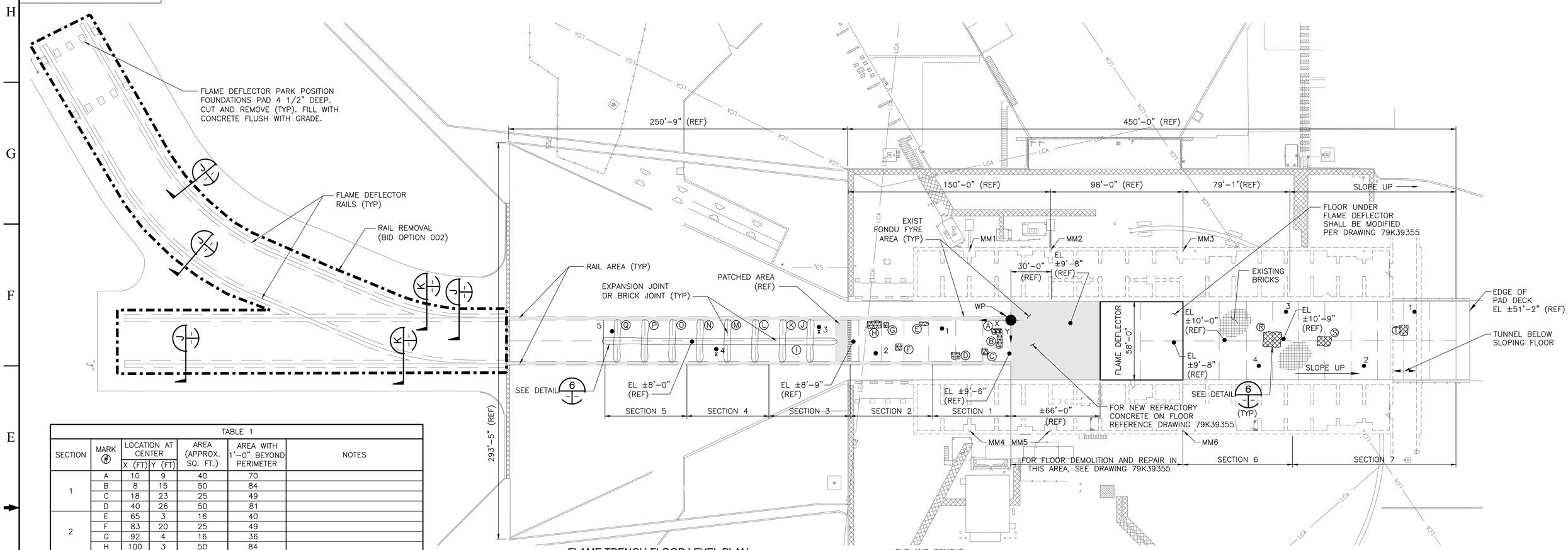


## FLAME TRENCH FLOOR LEVEL PLAN

SCALE: 1" = 30'

| TABLE 1 | | | | | | |
|---|---|---|---|---|---|---|
| SECTION | MARK # | LOCATION AT CENTER X (FT) | LOCATION AT CENTER Y (FT) | AREA (APPROX. SQ. FT.) | AREA WITH 1'-0" BEYOND PERIMETER | NOTES |
| 1 | A | 10 | 9 | 40 | 70 | |
| | B | 8 | 15 | 50 | 84 | |
| | C | 18 | 23 | 25 | 49 | |
| | D | 40 | 26 | 50 | 81 | |
| 2 | E | 65 | 3 | 16 | 40 | |
| | F | 83 | 20 | 25 | 49 | |
| | G | 92 | 4 | 16 | 36 | |
| | H | 100 | 3 | 50 | 84 | |
| 3, 4, 5 | I | 150 | 15 | 340 | 688 | NORTH – SOUTH MIDDLE JOINT |
| 3 | J | 145 | 15 | 60 | 128 | |
| | K | 165 | 15 | 60 | 128 | |
| 4 | L | 185 | 15 | 60 | 128 | |
| | M | 205 | 15 | 60 | 128 | |
| 5 | N | 225 | 15 | 60 | 128 | |
| | O | 245 | 15 | 60 | 128 | |
| | P | 265 | 15 | 60 | 128 | |
| | Q | 285 | 15 | 60 | 128 | |
| 6 | R | –195 | 15 | 225 | 289 | |
| 7 | S | –235 | 15 | 60 | 96 | ON SOUTH SLOPE |
| | T | –290 | 8 | 50 | 81 | ON SOUTH SLOPE |

NOTES:

1. ALL X AND Y COORDINATES REFERENCE FROM WP (0,0). FIELD VERIFY EXACT LOCATIONS FOR REPAIR BY SOUNDING.
2. FOR TYPICAL TRENCH FLOOR REPAIR SEE DETAIL 6

LEGEND

- •1 CORE/PULL-OFF TEST LOCATION (TYP)
- •X3 BRICK DELAMINATED DURING CORING
- APPROXIMATE LOCATION OF HOLLOW SOUNDING AREAS – SAW CUT A MIN 12" BEYOND HOLLOW AREA
- ⊗ MARK # FOR TABLE 1
- EXISTING REFRACTORY BRICKS
- REFRACTORY CONCRETE (FONDU FYRE)

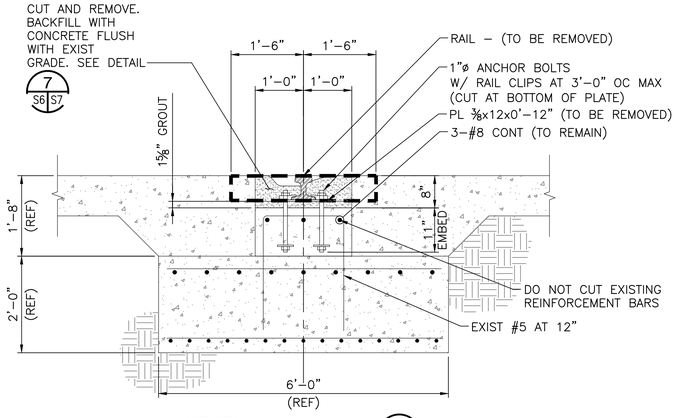


## SECTION J

SCALE: 3/4"=1'-0"

(BID OPTION 002)

NOTES:

1. FOR GENERAL NOTES SEE SHEETS V2 AND S1.
2. CONCRETE SHALL HAVE A 5000 PSI COMPRESSIVE STRENGTH AT 28 DAYS.
3. THE CONTRACTOR SHALL REPAIR FLOOR OF FLAME TRENCH BY REMOVING ALL LOOSE BRICK AND PLACING IN NEW REFRACTORY CONCRETE MATERIAL. TABLE 1 IDENTIFIES APPROXIMATE AREAS AND LOCATIONS OF THE REQUIRED REPAIR WORK. THE CONTRACTOR SHALL UTILIZE AN INDEPENDENT TESTING AGENCY TO ESTABLISH EXACT REMOVAL LIMITS OF LOOSE BRICKS. THE TESTING AGENCY SHALL USE THE CHAIN SOUNDING PROCEDURE OR THE ROTARY PERCUSSION PROCEDURE OUTLINED IN ASTM D 4580 TO DETERMINE WHERE BRICK BOND IS DEFICIENT AND HOLLOW SOUNDING. THE CONTRACTOR SHALL DOCUMENT THE BOUNDARIES ON A SHOP DRAWING AND SUBMIT FOR REVIEW AND APPROVAL.

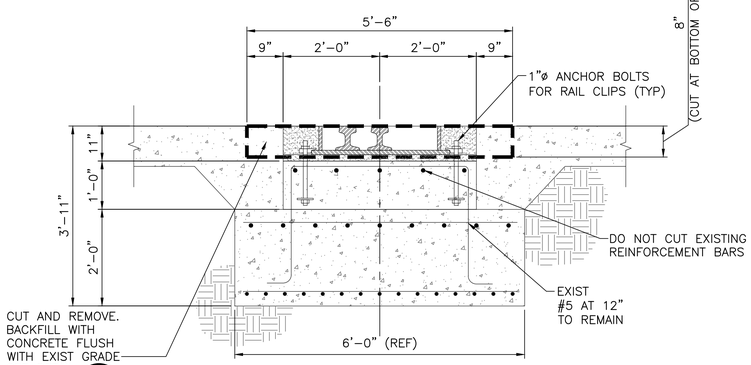


## SECTION K

SCALE: 3/4"=1'-0"

(BID OPTION 002)

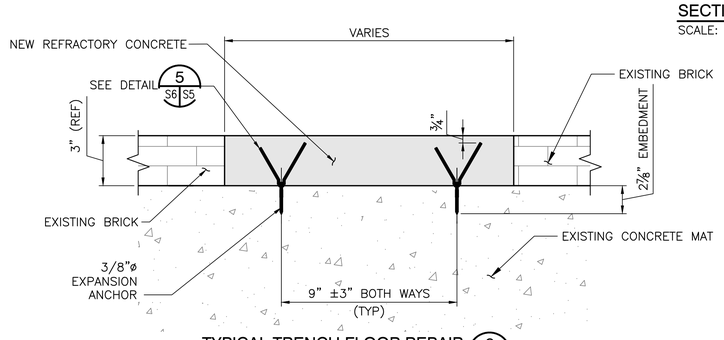


## TYPICAL TRENCH FLOOR REPAIR 6

SCALE: 3" = 1'-0"

30 20 10 0 30 60
1 IN = 30 FT

1 9"6"3"0 1 2 3
3/4 IN = 1 FT

0 3" 6" 9" 1'
3 IN = 1 FT

WHEN PRINTED FULL SIZE, THIS SHEET IS 28"X40" THIS COMPUTER DRAWING WAS CREATED IN AUTOCAD AND FILED UNDER THE DRAWING NUMBER

S6

| SYM | ZONE | DESCRIPTION | DATE | APPROVAL |
|---|---|---|---|---|
| | | REVISIONS | | |

RS&H IMPROVING YOUR WORLD
Reynolds, Smith and Hills, Inc.
115 Alma Blvd, Suite 101
Merritt Island, Florida 32953
(321) 453-0212 (321) 453-0223 FAX
www.rsandh.com

| SIGNATURES | | DATE |
|---|---|---|
| DRAWN: | J. HAUER | 08/5/14 |
| CHECKED: | B. LYTLE | 08/5/14 |
| SUBMITTED: | | |
| A or E of RECORD: | J. BALMER | |
| ST OF LICENSURE: FL LICENSE NO: | 54670 | |
| APPROVED: | | |
| A&E DISCPLIN DEPT HD: | A. PATEL | |
| NASA SYS/LDE: | M. HARTNETT | |

NATIONAL AERONAUTICS AND SPACE ADMINISTRATION
JOHN F. KENNEDY SPACE CENTER, NASA
KENNEDY SPACE CENTER, FLORIDA

LAUNCH COMPLEX 39
LAUNCH PAD 39B

# REFURBISH AND MODIFY FLAME TRENCH FLOOR MODIFICATION DETAILS

| FILE NO. | SIZE | DWG. NO. | REV |
|---|---|---|---|
| 302-6058-051 | F | 79K39723 | |

PROJ. NO. PCN 98948 SHEET 9 OF

KSC FORM 1-11 (REV. 3/76) (CG 3/93)

NOTICE -- WHEN GOVERNMENT DRAWINGS, SPECIFICATIONS, OR OTHER DATA ARE USED FOR ANY PURPOSE OTHER THAN IN CONNECTION WITH A DEFINITELY RELATED GOVERNMENT PROCUREMENT OPERATION, THE UNITED STATES GOVERNMENT THEREBY INCURS NO RESPONSIBILITY NOR ANY OBLIGATION WHATSOEVER; AND THE FACT THAT THE GOVERNMENT MAY HAVE FORMULATED, FURNISHED, OR IN ANY WAY SUPPLIED THE SAID DRAWINGS, SPECIFICATIONS OR ANY OTHER DATA IS NOT TO BE REGARDED BY IMPLICATION, OR OTHERWISE IN ANY MANNER CONSTRUED, LICENSING ON ANY OTHER PERSONS OR CORPORATION, OR CONVEYING ANY RIGHTS OR PERMISSION TO MANUFACTURE, USE, OR SELL ANY PATENTED INVENTION THAT IN ANY WAY BE RELATED THERETO.

## NOTES:

1. FOR GENERAL NOTES SEE V2 AND S1.
2. SEE SPECIFICATION SECTION 03 30 00 FOR CONCRETE WORK.
3. BOND BRICK TYPE 2 IS ALTERNATE TO TYPE 1 WHERE ANCHOR INTERFERES WITH REBAR. CONTRACTOR SHALL LOCATE REBAR IN THE WALL USING A PACHOMETER OR SIMILAR DEVICE TO DETERMINE WHICH BOND BRICK TYPE TO USE. THE CONTRACTOR SHALL NOT DAMAGE EXISTING REBAR IN WALL.
4. BOND BRICKS FOR 4 1/2" AND 3" WIDE BRICK ARE SIMILAR.
5. WHERE INTERFACE SURFACE OF PLATE ANCHORS DOES NOT COME INTO CONTACT WITH CONCRETE WALL DUE TO SPALLS, PROVIDE A JAM NUT ON THE ANCHOR ROD TO HOLD THE PLATE ANCHOR IN POSITION FOR THE REQUIRED BRICK LINE. SEE DETAIL P
6. FOR EXISTING CONCRETE REINFORCEMENT, REFER TO NASA DRAWING FILE NO. 203–237, VOLUME 9, SHEET # 9000 THRU 9020 AND SHEET # 9044 THRU 9047.
7. CONCRETE RECESSES ARE SHOWN PRIOR TO PLACEMENT OF BONDING MORTAR. RECESSES SHALL BE COMPLETELY FILLED WITH BONDING MORTAR DURING BRICK INSTALLATION PROCESS.
8. CONTRACTOR SHALL LOCATE HORIZONTAL REINFORCEMENT IN WALL AND LAYOUT BRICK ANCHOR COURSES ACCORDINGLY. WHERE HORIZONTAL REINFORCEMENT WILL OBSTRUCT CONCRETE ANCHORS, THE CONTRACTOR SHALL ANCHOR THE COURSE IMMEDIATELY BELOW THE OBSTRUCTING REINFORCEMENT AND CONTINUE THE ANCHOR COURSE SPACING PER TABLE REQUIREMENTS.
9. DIMENSION FOR RECESS IN BRICK TO RECEIVE PLATE ANCHOR.
10. FOR CONCRETE ADHESIVE ANCHORS SEE SPECIFICATION SECTION 03 11 20.

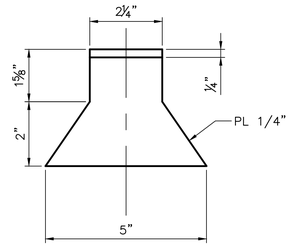


TYPE 1 PLATE ANCHOR
SCALE: NTS

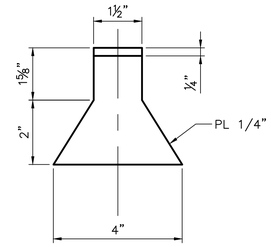


TYPE 2 PLATE ANCHOR
SCALE: NTS

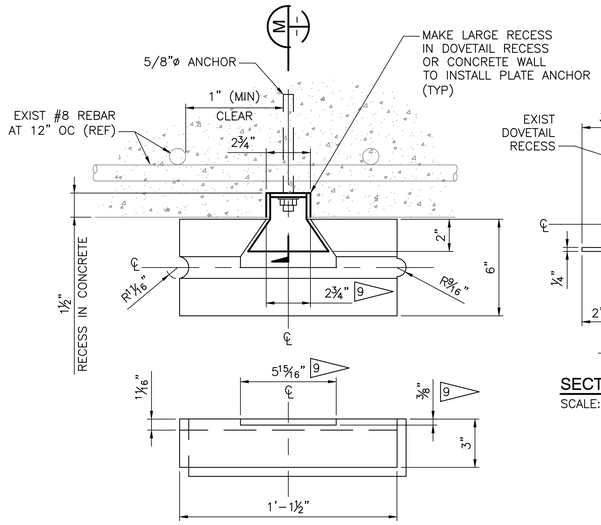


BOND BRICK TYPE 1 4
SCALE: NTS

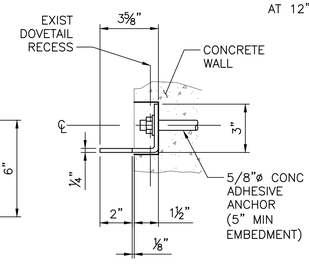


SECTION M 5
SCALE: NTS

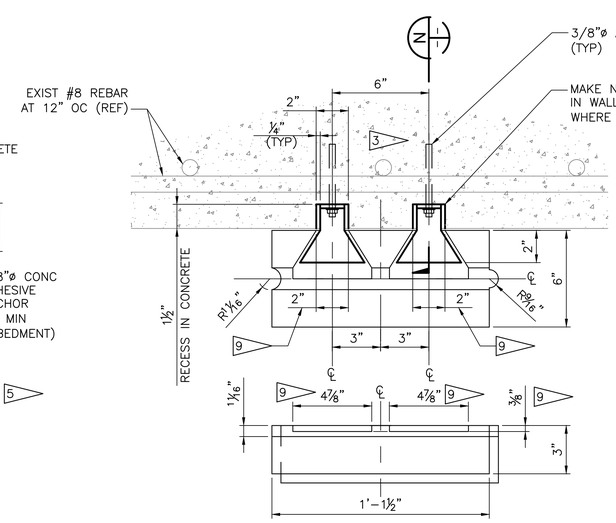


BOND BRICK TYPE 2 4
SCALE: NTS

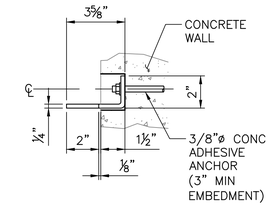


SECTION N 5
SCALE: NTS

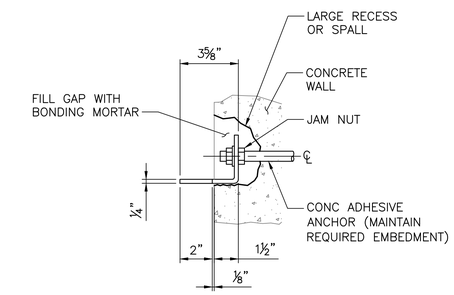


DETAIL P
SCALE: NTS

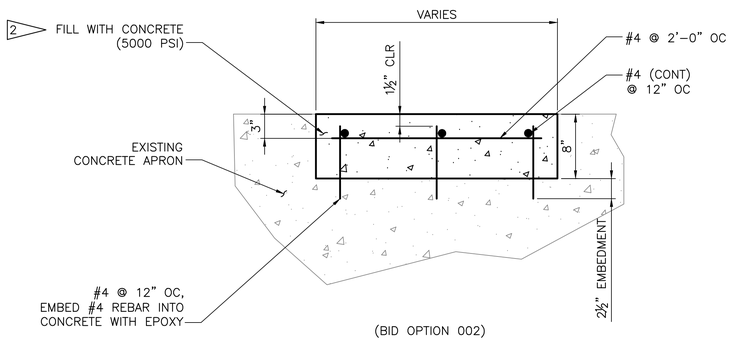


DETAIL 7 S6 S7
SCALE: NTS

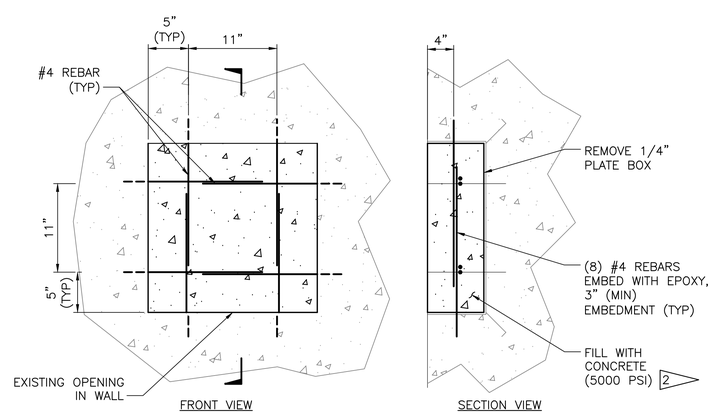


WALL PATCH DETAIL 8 S2 S7 S3
SCALE: NTS

WHEN PRINTED FULL SIZE, THIS SHEET IS 28"X40"
THIS COMPUTER DRAWING WAS
CREATED IN AUTOCAD AND
FILED UNDER THE DRAWING NUMBER

S7

| SYM | ZONE | DESCRIPTION | DATE | APPROVAL |
|---|---|---|---|---|
| | | REVISIONS | | |

RS&H IMPROVING YOUR WORLD
Reynolds, Smith and Hills, Inc.
115 Alma Blvd, Suite 101
Merritt Island, Florida 32953
(321) 453-0212 (321) 453-0223 FAX
www.rsandh.com

| SIGNATURES | | DATE |
|---|---|---|
| DRAWN: | L. SWEENEY | 08/5/14 |
| CHECKED: | B. LYTLE | 08/5/14 |
| SUBMITTED: | | |
| A or E of RECORD: | J. BALMER | |
| ST OF LICENSURE: FL LICENSE NO: | 54670 | |
| APPROVED: | | |
| A&E DISCPLIN DEPT HD: | A. PATEL | |
| NASA SYS/LDE: | M. HARTNETT | |

NATIONAL AERONAUTICS AND SPACE ADMINISTRATION
JOHN F. KENNEDY SPACE CENTER, NASA
KENNEDY SPACE CENTER, FLORIDA

LAUNCH COMPLEX 39
LAUNCH PAD 39B
# REFURBISH AND MODIFY FLAME TRENCH WALL MODIFICATION DETAILS

| FILE NO. | SIZE | DWG. NO. | REV |
|---|---|---|---|
| 302–6058–051 | F | 79K39723 | |

PROJ. NO. PCN 98948 SHEET 10 OF 10

KSC FORM 1-11 (REV. 3/76) (CIG 3/93)