NOTICE - WHEN GOVERNMENT DRAWINGS, SPECIFICATIONS, OR OTHER DATA ARE USED FOR ANY PURPOSE OTHER THAN IN CONNECTION WITH A DEFINITELY RELATED GOVERNMENT PROCUREMENT OPERATION, THE UNITED STATES GOVERNMENT THEREBY INCURS NO RESPONSIBILITY NOR ANY OBLIGATION WHATSOEVER, AND THE FACT THAT THE GOVERNMENT MAY HAVE FORMULATED, FURNISHED, OR IN ANY WAY SUPPLIED THE SAID DRAWINGS, SPECIFICATIONS OR ANY OTHER DATA IS NOT TO BE REGARDED BY IMPLICATION OR OTHERWISE IN ANY MANNER LICENSING THE HOLDER OR ANY OTHER PERSON OR CORPORATION, OR CONVEYING ANY RIGHTS OR PERMISSION TO MANUFACTURE, USE OR SELL ANY PATENTED INVENTION THAT IN ANY WAY BE RELATED THERETO.

PART NO.	MF	REVISIONS				
		ZONE	SYM	DESCRIPTION	DATE	APPROVAL
				APPROVED FOR CONSTRUCTION	2-14-01	

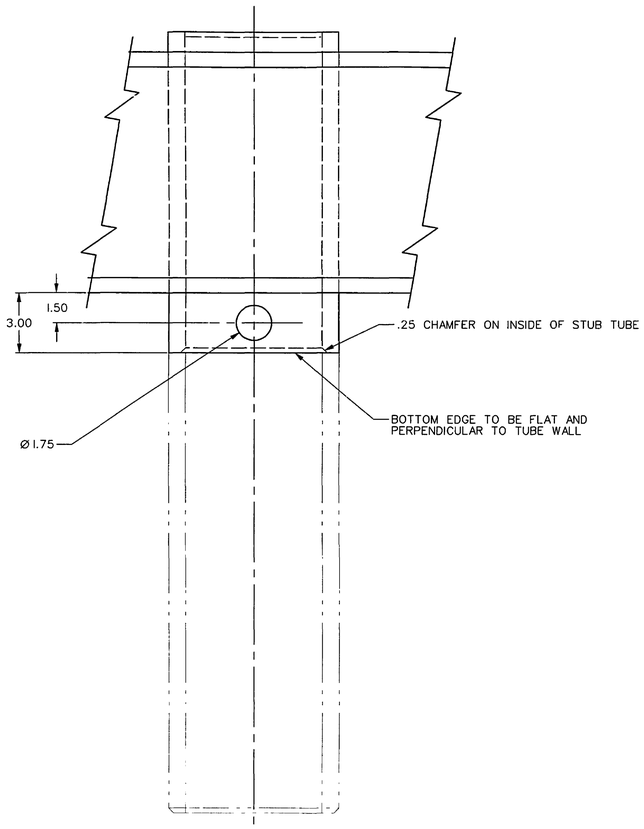

NOTE:
DEMOLITION CONSISTS OF CUTTING OFF THE EXISTING TUBE AS SHOWN AND BORING THREE HOLES AS SHOWN IN ANY LOCATION NOT LESS THAN 90° APART ON PERIPHERY OF THE TUBE.

DEMOLITION
(8) PLACES PER FLAME DEFLECTOR
TRUCK ASS'Y NOT SHOWN

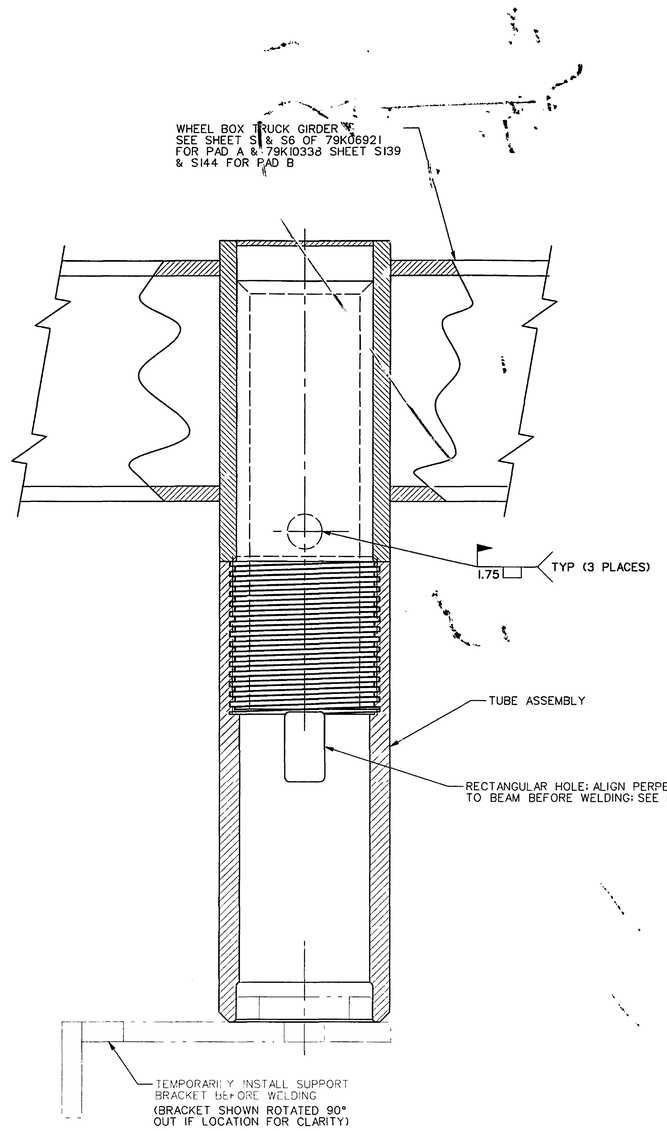

FABRICATION/INSTALLATION
(8) PLACES PER DEFLECTOR

NOTES:

1. STEEL DIE STAMP WITH PART NUMBER PER KSC-STD-E-0015 USING .25 INCH CHARACTERS
2. STEEL WELDING SHALL BE PERFORMED IN ACCORDANCE WITH NASA-SPEC-5004, CLASS C INSPECTION, UNLESS OTHERWISE NOTED.
3. ALL MACHINED SURFACES SHALL BE 125 OR BETTER UNLESS OTHERWISE NOTED.
4. REMOVE BURRS AND BREAK SHARP EDGES.
5. PREPARE AND PAINT CARBON STEEL PER KSC-STD-C-0001, ZONE 4. NO TOP COAT TO BE APPLIED.
6. APPLY A LIBERAL COAT OF NEVER SEIZE TO BOTH THREADS BEFORE FINAL ASSEMBLY. AFTER INSTALLATION IS COMPLETE PROTECT OUTER SURFACE OF TUBE AS WAS PREVIOUSLY DONE TO THE WHEEL TRUCK GUIDE TUBES. ALL OTHER SURFACES TO BE PAINTED TO MATCH THE SURROUNDING STRUCTURE.
7. FABRICATION CONSISTS OF BUILDING THE TUBE ASSEMBLY SHOWN ON SHEET TWO OF THIS DRAWING AND INSERTING THE SCREW PART INTO THE EXISTING TUBE AND PLUG WELDING IT IN PLACE. THE SCREW PORTION IS TO PLACED INTO LOCATION SUCH THAT THE RECTANGULAR HOLE IN THE NUT PORTION OF THE SCREW ASSEMBLY IS ORIENTED IN THE LOCATION SHOWN IN THIS DRAWING AND THE NUT PORTION IS SEATED FIRMLY AGAINST THE STUB END OF THE EXISTING TUBE.
8. THE CLEARANCE BETWEEN THE SCREW AND THE EXISTING TUBE IS BEING DESIGNED TO BE THE SAME SIZE. THIS IS A INTERFERANCE FIT EXCEPT THE EXISTING TUBE IS CORRODED INSIDE AND SHOULD BE LARGER THAN WHAT IT WAS ORIGINALLY. IF IT IS NECESSARY THE O.D. OF THE SCREW PORTION CAN BE REDUCED AT ASSEMBLY TO PROVIDE A SNUG FIT INTO THE EXISTING TUBE

VENDOR NOTES:

A — SEAMLESS STEEL TUBING
HOT FINISH C-1026
AVAILABLE FROM:
TUBESALES OF ORLANDO
1-800-203-8000

LIST OF MATERIAL

ASSY DASH NO. AND NO. REQD					ZONE	FIND/ ITEM NO.	MFR CODE	PART OR STOCK NO.	DESCRIPTION	STOCK SIZE	MATERIAL SPEC
						4					
			1			3			SCREW	TUBE: 7.5" O.D. X 5.5" I.D.	A
			1			2			NUT	TUBE: 8.5" O.D. X 6.5" I.D.	A
			-			1		80K59800-1	TUBE ASSEMBLY		

HOLE TOLERANCES PER AND10387	
.0135 THRU .125	+.004 -.001
.126 THRU .250	+.005 -.001
.251 THRU .500	+.006 -.001
.501 THRU .750	+.008 -.001
.751 THRU 1.000	+.010 -.001
1.001 THRU 2.000	+.012 -.001

SK-99-3462	
SEE ENGINEERING RECORDS	
79K06921	PAD A
80K59799	PAD B
NEXT ASSY	USED ON
APPLICATION	

UNLESS OTHERWISE SPECIFIED
DIMENSIONS ARE IN INCHES
TOLERANCES ON FRACTIONS ± 1/16 DECIMALS .XX ± ±.0312 .XXX ± ±.010 .XXXX ± ±.0082 ANGLES ± 0.5°
MATERIAL
HEAT TREATMENT
FINAL PROTECTIVE FINISH

ORIGINAL DATE OF DRAWING	FEB. 10, 2000
DRAFTER	WALT S.
CHECKER	SAM Z.
ENGINEER	W. SZCZEPANIK
SUBMITTED	S. ZERILLI
APPROVED	S. BHIDE 2/24/01
DATE	

WHEEL SUPPORT GUIDE TUBE FOR SIDE FLAME DEFLECTORS AT LAUNCH PADS 39 A & B

JOHN F. KENNEDY SPACE CENTER, NASA
KENNEDY SPACE CENTER FLORIDA

WEIGHT CHECKER	DATE	CODE 22264	DWG SIZE F	80K59800
SCALE	UNIT WEIGHT		SHEET 1 OF 2	

THIS COMPUTER DRAWING WAS CREATED IN MICROSTATION AND FILED UNDER THE DRAWING NUMBER
BASELINE: I62.00
MODEL No: A77-0852

KSC FORM 21-9 (REV 7/87)-(CIG 393)

NOTICE: WHEN GOVERNMENT DRAWINGS, SPECIFICATIONS OR OTHER DATA ARE USED FOR ANY PURPOSE OTHER THAN IN CONNECTION WITH A DEFINITELY RELATED GOVERNMENT PROCUREMENT OPERATION, THE UNITED STATES GOVERNMENT THEREBY INCURS NO RESPONSIBILITY NOR ANY OBLIGATION WHATSOEVER; AND THE FACT THAT THE GOVERNMENT MAY HAVE FORMULATED, FURNISHED, OR IN ANY WAY SUPPLIED THE SAID DRAWINGS, SPECIFICATIONS, OR OTHER DATA IS NOT TO BE REGARDED BY IMPLICATION, OR OTHERWISE IN ANY MANNER CONSTRUED, TO BE LICENSING THE HOLDER OR ANY OTHER PERSON OR CORPORATION, OR CONVEYING ANY RIGHTS OR PERMISSION TO MANUFACTURE, USE OR SELL ANY PATENTED INVENTION THAT MAY IN ANY WAY BE RELATED THERETO.

PART NO.	MF	REVISIONS			
		ZONE	SYM	DESCRIPTION	DATE	APPROVAL

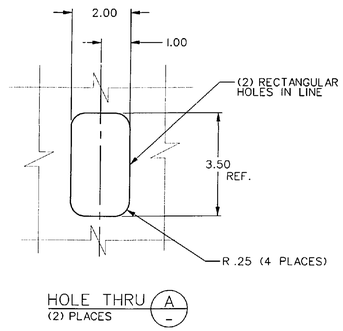

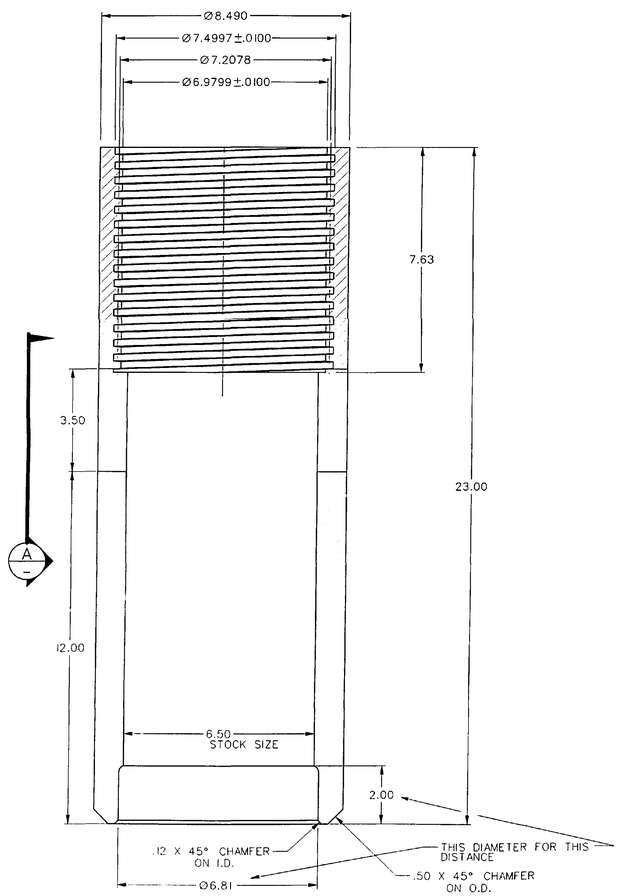

2 NUT -2
(8) REQUIRED

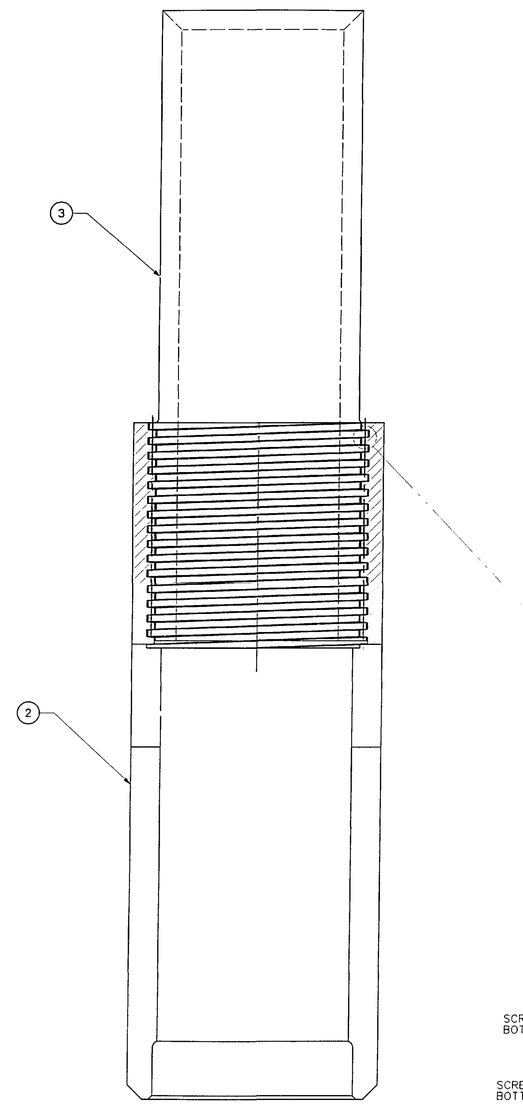

1 TUBE ASS'Y -1
(8) REQUIRED

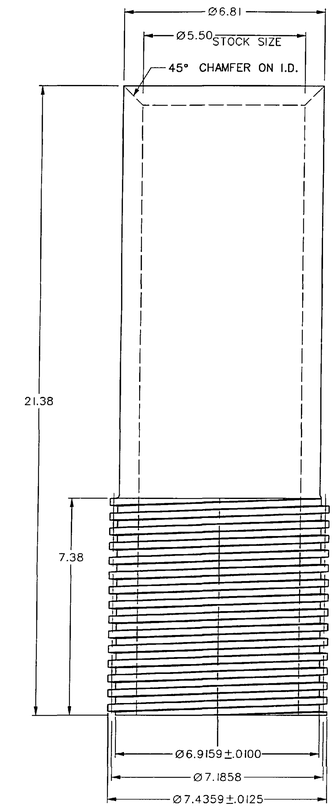

3 SCREW -3
(8) REQUIRED

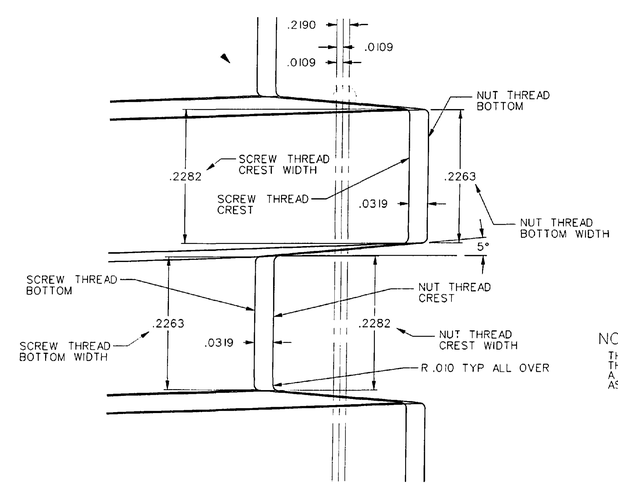

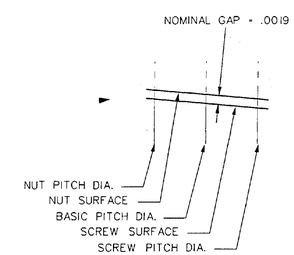

NOTE:
THIS IS THE BASIC DIMENSIONS FOR THE 10° MODIFIED SQUARE THREAD WITH A PITCH OF 0.5" (2 THREADS PER INCH) AS SHOWN IN MACHINERY'S HANDBOOK

THIS COMPUTER DRAWING WAS CREATED IN MICROSTATION AND FILED UNDER THE DRAWING NUMBER 80K59799

80K59799		UNLESS OTHERWISE SPECIFIED DIMENSIONS ARE IN INCHES TOLERANCES ON FRACTIONS ± 1/4 DECIMALS .XX ± .06 .XXX ± .010 .XXXX ± .0087 ANGLES ± 0.5°	ORIGINAL DATE OF DRAWING FEB. 10, 2000 DRAFTER WALT S. CHECKER SAM Z. ENGINEER W. SZCZEPANIK SUBMITTED S. ZERILLI	WHEEL SUPPORT GUIDE TUBE FOR SIDE FLAME DEFLECTORS AT LAUNCH PADS 39 A & B	JOHN F. KENNEDY SPACE CENTER, NASA KENNEDY SPACE CENTER FLORIDA
SEE ENGINEERING RECORDS		MATERIAL CARBON STEEL TUBING, SEAMLESS, HOT FINISH, C-1026 HEAT TREATMENT NONE	APPROVED S. DHIDE DATE	WEIGHT CHECKER / DATE / CODE 22264	DWG SIZE F / 80K59800
NEXT ASSY / USED ON		FINAL PROTECTIVE FINISH LOTS OF GREASE ON THREADS AND PAINT THE REST		SCALE / UNIT WEIGHT	SHEET 2 OF 2
APPLICATION					