| PART NO. | MF | REVISIONS | | | |
|---|---|---|---|---|---|
| | | ZONE | SYM | DESCRIPTION | DATE | APPROVAL |
| | | | | APPROVED FOR CONSTRUCTION | 2/24/00 | |

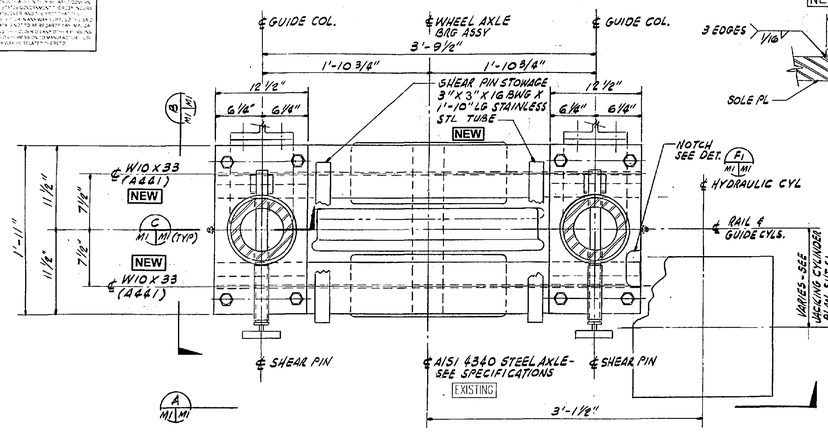


## PLAN - WHEEL TRUCK ASSEMBLY AND HYDRAULIC CYLINDER

1 1/2" = 1'-0"

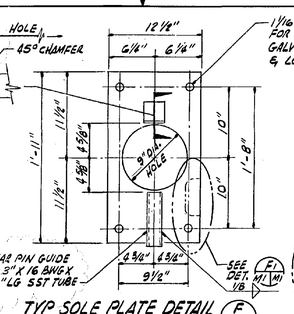


## TYP SOLE PLATE DETAIL (F M1/M1)

1 1/2" = 1'-0"

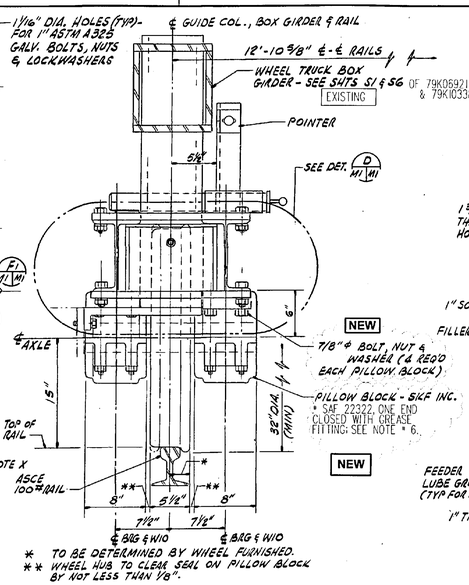


## ELEVATION (B M1/M1) WHEEL TRUCK ASSY. - IN TRANSIT POSITION

1 1/2" = 1'-0"

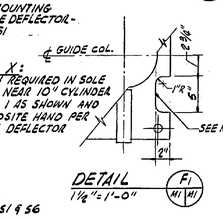


NOTE X: NOTCH REQUIRED IN SOLE PLATE NEAR 10" CYLINDER ONLY. 1 AS SHOWN AND 1 OPPOSITE HAND PER FLAME DEFLECTOR

## DETAIL (F M1/M1)

1 1/2" = 1'-0"

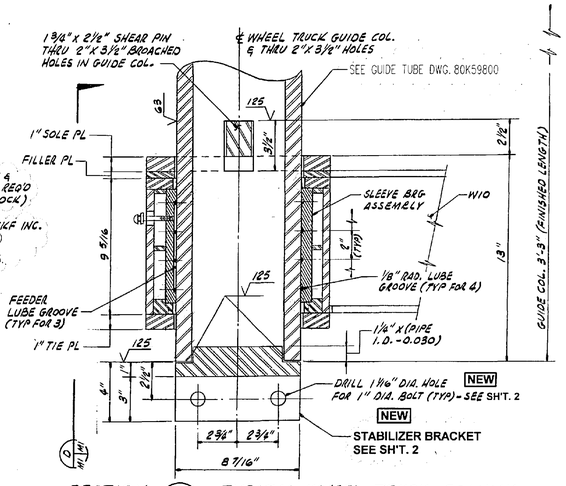


## SECTION (C M1/M1) TYPICAL WHEEL TRUCK COLUMN & SLEEVE BEARING ASSEMBLY

3" = 1'-0"

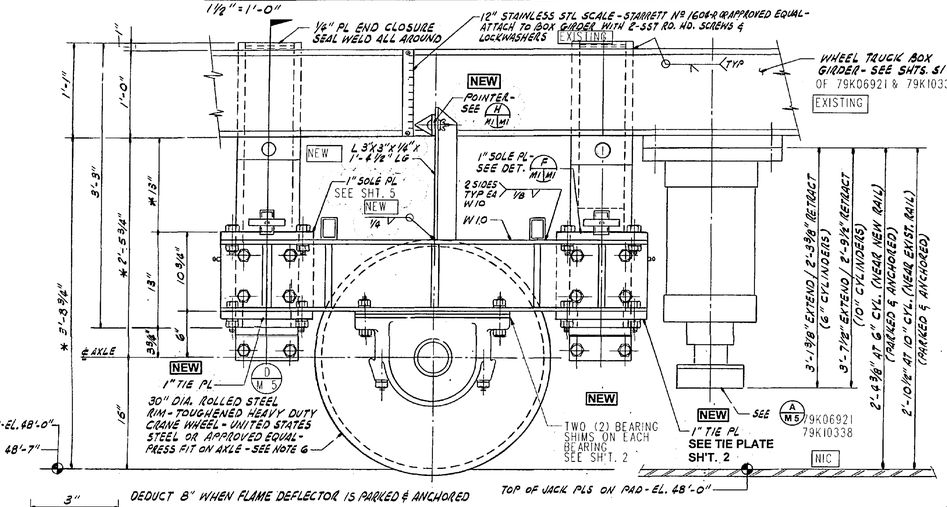


## ELEVATION (A M1/M1) WHEEL TRUCK ASSEMBLY - IN TRANSIT POSITION

1/2" = 1'-0"

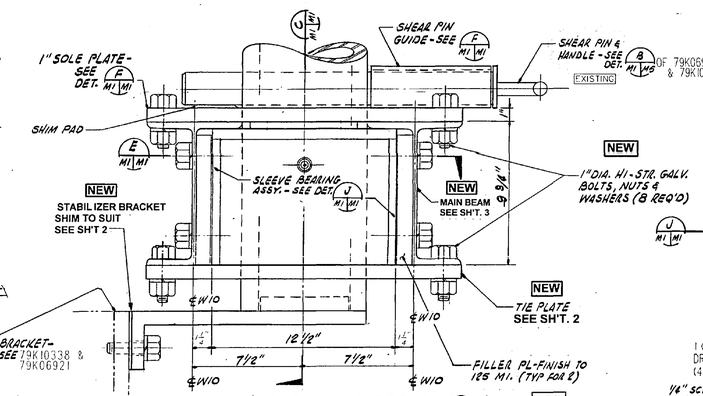


## IN-TRANSIT LOCK DETAIL (D M1/M1)

3" = 1'-0"

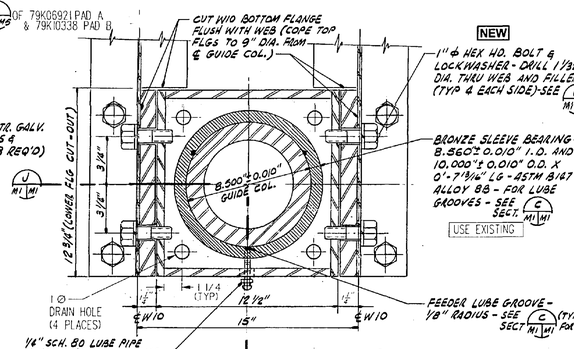


## PLAN SECTION (E M1/M1) SLEEVE BEARING ASSEMBLY

3" = 1'-0"

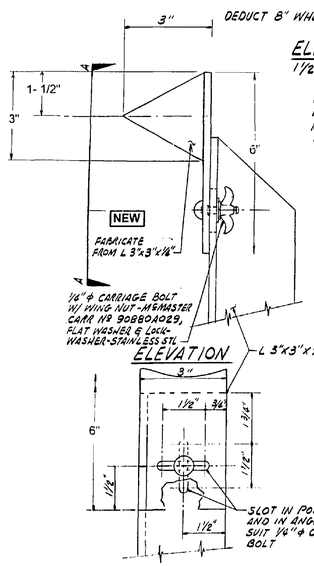


## ELEVATION

## SECTION A-A

## POINTER DETAIL (H M1/M1)

NO SCALE

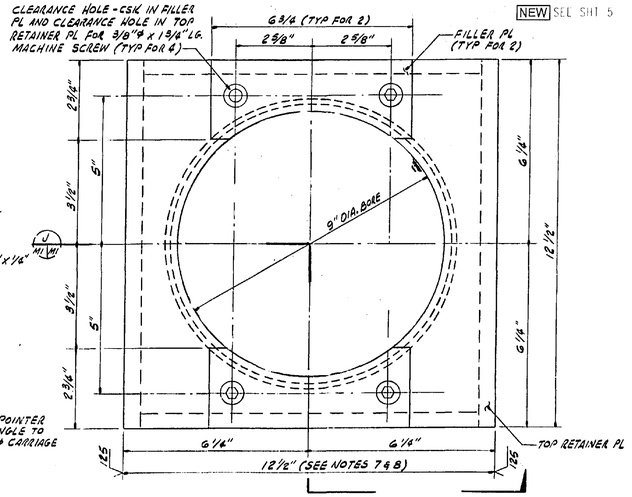


## PLAN - SLEEVE BEARING ASSEMBLY DETAIL (G M1/M1)

6" = 1'-0"

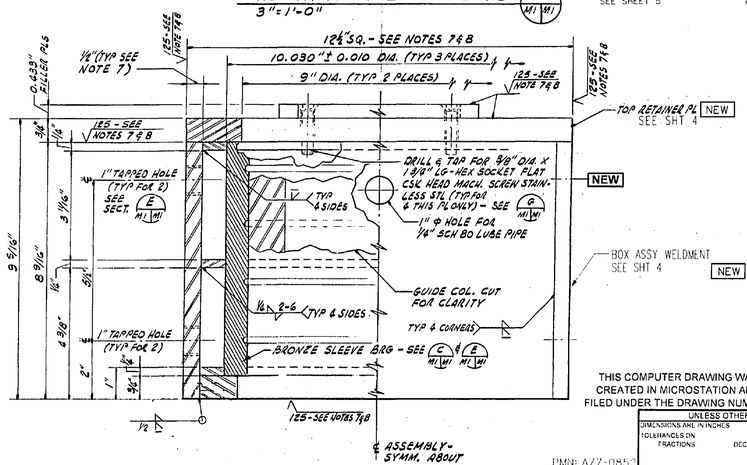


## SLEEVE BEARING ASSEMBLY - SECTION (J M1/M1)

6" = 1'-0"

## NOTES:

1. QUANTITIES SHOWN IN EACH DETAIL ARE FOR THAT DETAIL ONLY. TOTAL QUANTITY REQUIRED MUST BE INCREASED BY NUMBER OF ITEMS PER WHEEL TRUCK ASSEMBLY.
2. FOUR (4) WHEEL TRUCKS REQUIRED PER FLAME DEFLECTOR - 2 AS SHOWN AND 2 OPPOSITE HAND WITH RESPECT TO RAIL.
3. PAD A SHOWN, PAD B SIMILAR.
4. ALL BOLTING SHALL BE HIGH STRENGTH TO ASTM A325 - ALL PARTS GALV. EXCEPT AS NOTED.
5. ALL FERROUS UNPLATED METALS TO BE BLASTED & ZINC-RICH COATED.
6. WHEEL DEAD LOAD = 94,000 LBS. - WHEELS AT FLAME TRENCH TO BE DOUBLE-FLANGED TAPERED TREAD. WHEELS ON OTHER RAILS TO BE SINGLE-FLANGED TAPERED TREAD WITH FLANGE OUTBOARD. EACH WHEEL AXLE SHALL HAVE A "FIELD" BEARING IN ITS INBOARD PILLOW BLOCK. MAX. WHEEL LOAD W/ 70 KNOT WIND = 106,500 LBS.
7. DIMENSIONS SHOWN ARE FINISHED DIMENSIONS AND RAW MATERIAL SHALL HAVE EXCESS FOR MACHINING.
8. ALL 6 SIDES OF ASSEMBLY SHALL BE TRUE, FLAT AND SQUARE WITHIN 0.010" EACH WITH THE OTHER. FINISH TO MICROINCHES NOTED PER ANSI B46.1-1962.
9. REFERENCE DRAWINGS: PAD A - 79K10338, SHEETS 304 & 307; PAD B - 79K06921, SHEETS 19 & 22.
10. ALL WELDING SHALL BE PERFORMED IN ACCORDANCE WITH NASA-SPEC-5004, CLASS B INSPECTION UNLESS OTHERWISE NOTED.

THIS COMPUTER DRAWING WAS CREATED IN MICROSTATION AND FILED UNDER THE DRAWING NUMBER

PMN: A77-0853
B/L: 162.00

| | | | |
|---|---|---|---|
| UNLESS OTHERWISE SPECIFIED DIMENSIONS ARE IN INCHES TOLERANCES ON FRACTIONS DECIMALS ANGLES | ORIGINAL DATE OF DRAWING FEB 9, 2000 | WHEEL SUPPORT FOR SIDE FLAME DEFLECTORS AT LAUNCH PAD 39 A & B | JOHN F. KENNEDY SPACE CENTER, NASA |
| MATERIAL | DRAFTER D.L. S. | | KENNEDY SPACE CENTER FLORIDA |
| HEAT TREATMENT | CHECKER S.A.V. | | |
| FINAL PROTECTIVE FINISH | ENGINEER A. VAZQUEZ-RAS S. | | |
| M1 | SUBMITTED S. ZEIS | | |
| | APPROVED | WEIGHT CHECKER / DATE / CODE 22264 | DWG SIZE F — 80K59799 |
| | | SCALE / UNIT WEIGHT | SHEET 1 OF 5 |

| PART NO. | MF | REVISIONS | | | | |
|---|---|---|---|---|---|---|
| | | ZONE | SYM | DESCRIPTION | DATE | APPROVAL |

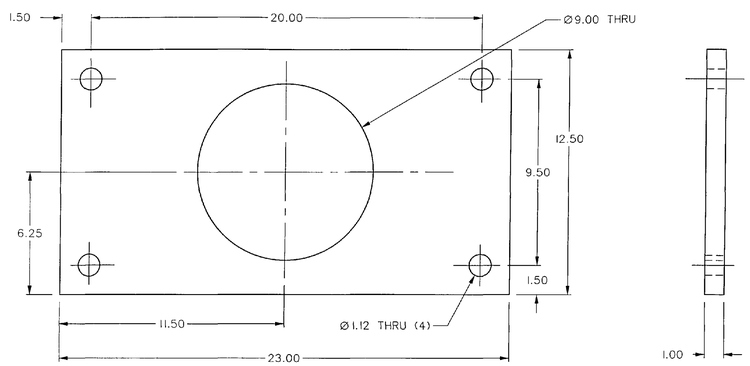


MAT'L.: ASTM A-36
(2) REQ'D.

TIE PLATE
SCALE: 1: 3

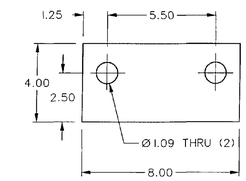


MAT'L.: 0.060 THICK ASTM A-36 ; FOUR (4) REQ'D.

STABILIZER BRACKET SHIM
SCALE: 1: 3

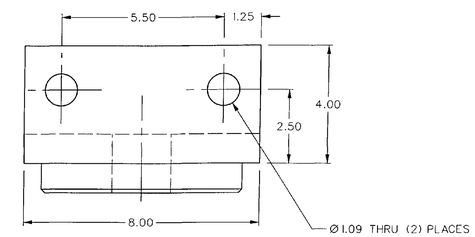


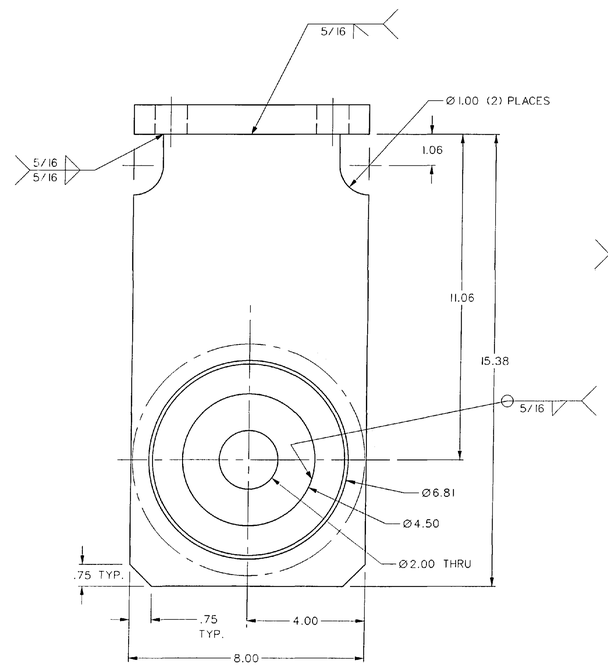


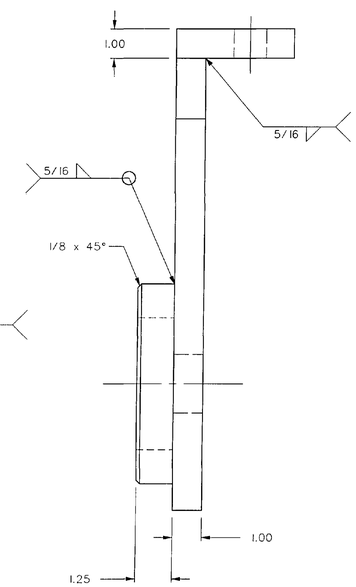


MAT'L.: ASTM A-36
(2) TWO REQ'D.

STABILIZER BRACKET
SCALE: 1: 2

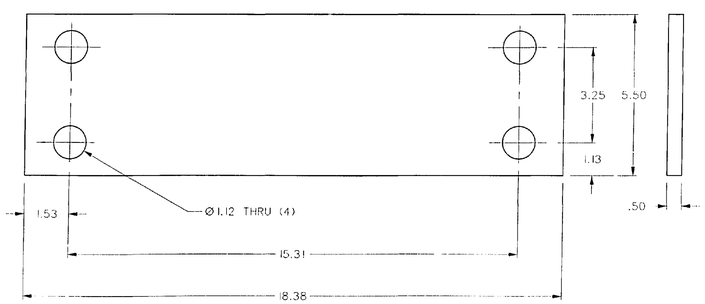


MAT'L.: ASTM A-36
(4) REQ'D.

BEARING SHIM
SCALE: 1: 2

THIS COMPUTER DRAWING WAS CREATED IN MICROSTATION AND FILED UNDER THE DRAWING NUMBER

| | | | | | |
|---|---|---|---|---|---|
| SEE ENGINEERING RECORDS | UNLESS OTHERWISE SPECIFIED<br>DIMENSIONS ARE IN INCHES<br>TOLERANCES ON<br>FRACTIONS N / A; DECIMALS .XX ± .030, .XXX ± .010; ANGLES ± .5° | ORIGINAL DATE OF DRAWING FEB. 9, 2000<br>DRAFTER WALT S.<br>CHECKER SAM Z.<br>ENGINEER W. SZCZEPANIK<br>SUBMITTED S. ZERILLI | WHEEL SUPPORT FOR SIDE FLAME DEFLECTORS AT LAUNCH PAD 39 A & B | JOHN F. KENNEDY SPACE CENTER, NASA<br>KENNEDY SPACE CENTER FLORIDA | |
| 79K06921 sh 19 | MATERIAL | APPROVED S. BRIDE 2/15/00 | WEIGHT CHECKER | DATE | CODE 22264 |
| NEXT ASSY / USED ON | HEAT TREATMENT | | SCALE | UNIT WEIGHT | DWG SIZE F 80K59799 |
| APPLICATION | FINAL PROTECTIVE FINISH | | | | SHEET 2 OF |

| PART NO. | MF | REVISIONS | | | | |
|---|---|---|---|---|---|---|
| | | ZONE | SYM | DESCRIPTION | DATE | APPROVAL |
| | | | | | | |

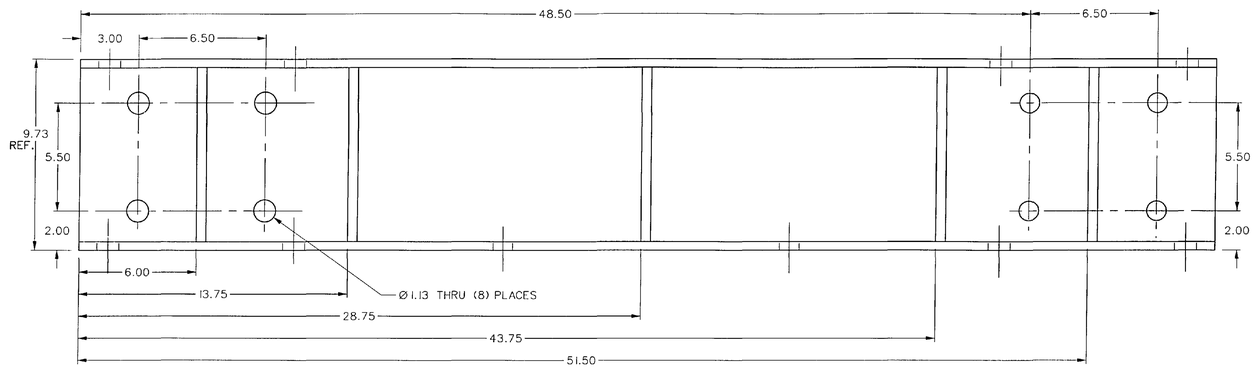


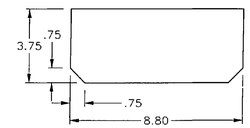


MAT'L.: 1/2" THICK ASTM A-36
EIGHT (8) REQ'D.

TYPICAL GUSSET
SCALE: 1 : 3

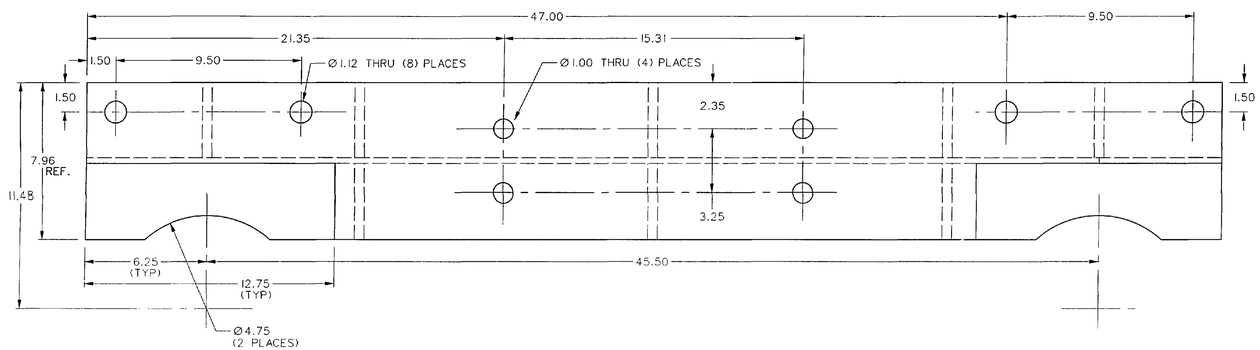


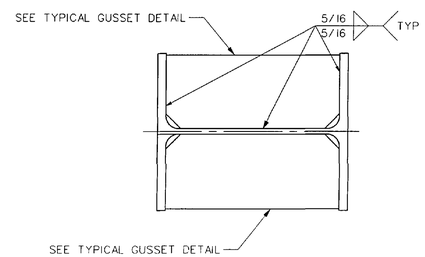


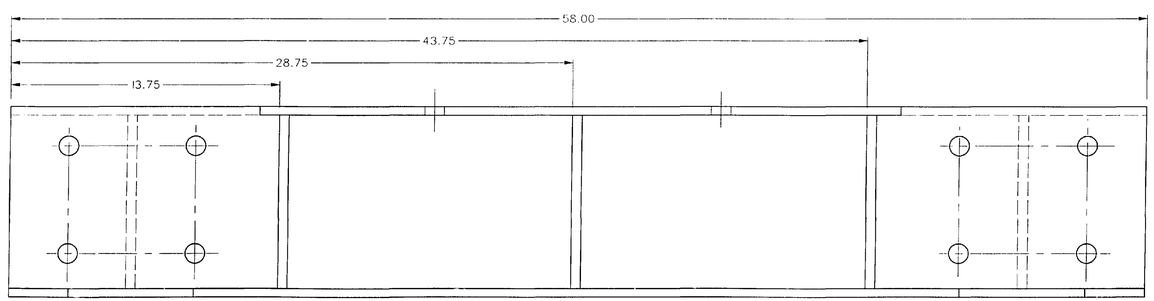


MAT'L.: W10 x 33 ASTM A-572 50
TWO (2) REQ'D.

MAIN WHEEL BEAM
SCALE: 1 : 3

THIS COMPUTER DRAWING WAS CREATED IN MICROSTATION AND FILED UNDER THE DRAWING NUMBER

| | | | |
|---|---|---|---|
| SEE ENGINEERING RECORDS | | | |
| 79K10338 sh 304 | PAD B | | |
| 79K06921 sh 19 | PAD A | | |
| NEXT ASSY | USED ON | | |
| APPLICATION | | | |

UNLESS OTHERWISE SPECIFIED
DIMENSIONS ARE IN INCHES
TOLERANCES ON FRACTIONS N / A DECIMALS .XX ± .030 .XXX ± .010 ANGLES ± .5°
MATERIAL
HEAT TREATMENT
FINAL PROTECTIVE FINISH

ORIGINAL DATE OF DRAWING FEB. 9, 2000
DRAFTER W.A. TYE
CHECKER C.SIM JR
ENGINEER W. SCOTT FRANKS
SUBMITTED S. TURILLI
APPROVED C. BHATT 2/15/00

WHEEL SUPPORT FOR SIDE FLAME DEFLECTORS AT LAUNCH PAD 39 A & B

WEIGHT CHECKER | DATE | CODE 22264
SCALE | UNIT WEIGHT

JOHN F. KENNEDY SPACE CENTER, NASA
KENNEDY SPACE CENTER FLORIDA

DWG SIZE F 80K59799
SHEET 3 OF

| PART NO. | MF | REVISIONS | | | | |
|---|---|---|---|---|---|---|
| | | ZONE | SYM | DESCRIPTION | DATE | APPROVAL |

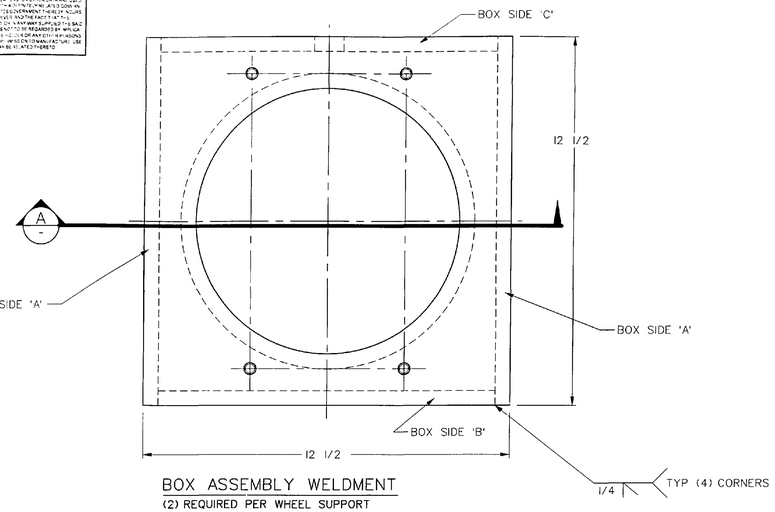


BOX ASSEMBLY WELDMENT
(2) REQUIRED PER WHEEL SUPPORT

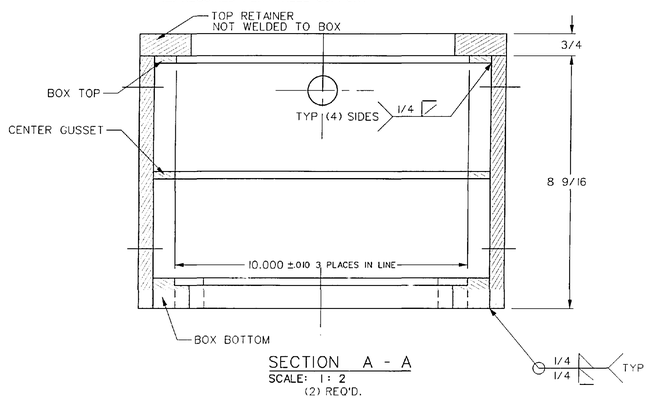


SECTION A - A
SCALE: 1 : 2
(2) REQ'D.

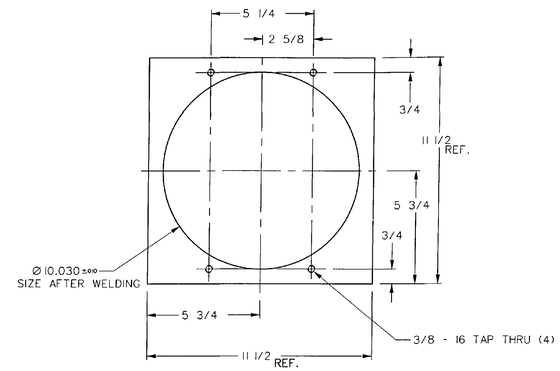


BOX TOP ~ .25 THICK
SCALE: 1 : 3 ~ (1) REQ'D.

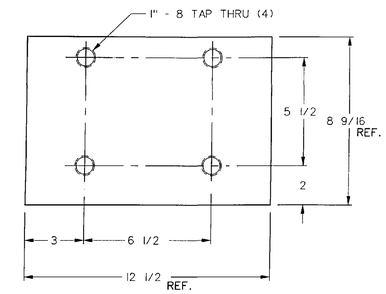


BOX SIDE 'A' ~ 1/2 THICK
SCALE: 1 : 3 ~ (2) REQ'D.

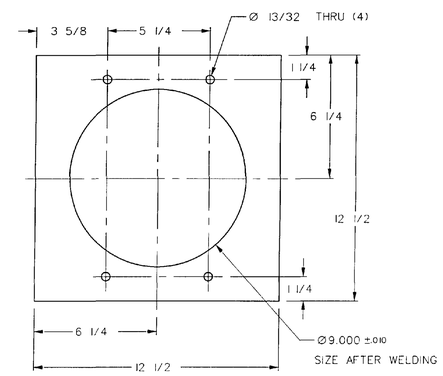


TOP RETAINER ~ 3/4 THICK
SCALE: 1 : 3 ~ (1) REQ'D.

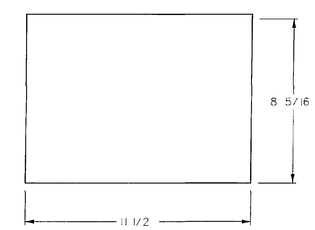


BOX SIDE 'B' ~ 1/2 THICK
SCALE: 1 : 3 ~ (1) REQ'D.

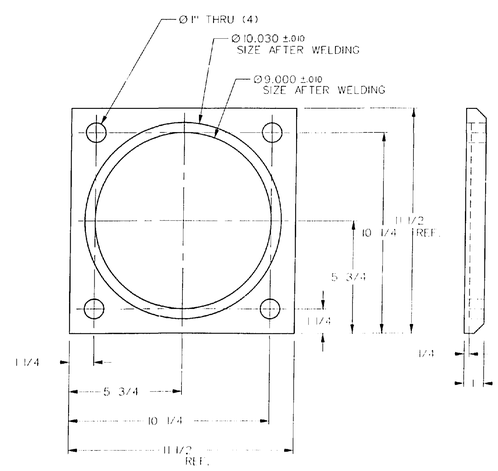


BOX BOTTOM ~ 1" THICK
SCALE: 1 : 3 ~ (1) REQ'D.

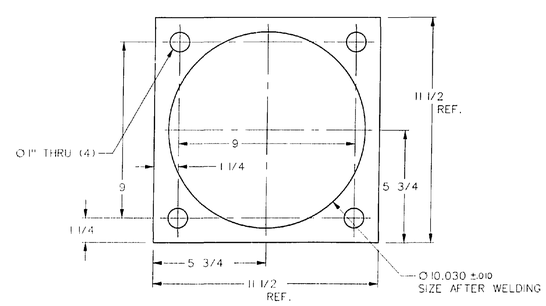


CENTER GUSSET ~ 1/4 THICK
SCALE: 1 : 3 ~ (1) REQ'D.

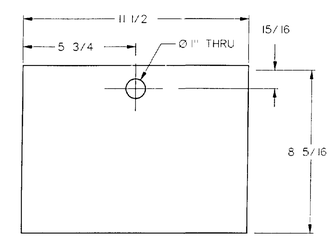


BOX SIDE 'C' ~ 1/2 THICK
SCALE: 1 : 3 ~ (1) REQ'D.

THIS COMPUTER DRAWING WAS CREATED IN MICROSTATION AND FILED UNDER THE DRAWING NUMBER

| | | | |
|---|---|---|---|
| SEE ENGINEERING RECORDS | | UNLESS OTHERWISE SPECIFIED<br>DIMENSIONS ARE IN INCHES<br>TOLERANCES ON FRACTIONS N / A; DECIMALS .XX ± .030, .XXX ± .010; ANGLES ± .5° | ORIGINAL DATE OF DRAWING FEB. 8, 2000<br>DRAFTER<br>CHECKER<br>ENGINEER<br>SUBMITTED<br>APPROVED |
| 79K06921 sh 19 | | MATERIAL | |
| NEXT ASSY | USED ON | HEAT TREATMENT | |
| APPLICATION | | FINAL PHOTOLECTIVE FINISH | |

WHEEL SUPPORT FOR SIDE FLAME DEFLECTORS AT LAUNCH PAD 39 A & B

JOHN F. KENNEDY SPACE CENTER, NASA
KENNEDY SPACE CENTER FLORIDA

| WEIGHT CHECKER | DATE | CODE 22264 | DWG SIZE F | 80K59799 |
|---|---|---|---|---|
| SCALE | UNIT WEIGHT | | SHEET 4 OF | |

NOTICE - WHEN GOVERNMENT DRAWINGS, SPECIFICATIONS OR OTHER DATA ARE USED FOR ANY PURPOSE OTHER THAN IN CONNECTION WITH A DEFINITELY RELATED GOVERNMENT PROCUREMENT OPERATION, THE UNITED STATES GOVERNMENT THEREBY INCURS NO RESPONSIBILITY, NOR ANY OBLIGATION WHATSOEVER; AND THE FACT THAT THE GOVERNMENT MAY HAVE FORMULATED, FURNISHED, OR IN ANY WAY SUPPLIED THE SAID DRAWINGS, SPECIFICATIONS OR ANY OTHER DATA IS NOT TO BE REGARDED BY IMPLICATION OR OTHERWISE IN ANY MANNER LICENSING THE HOLDER OR ANY OTHER PERSON OR CORPORATION, OR CONVEYING ANY RIGHTS OR PERMISSION TO MANUFACTURE, USE OR SELL ANY PATENTED INVENTION THAT IN ANY WAY BE RELATED THERETO

| PART NO. | MF | REVISIONS | | | | |
|---|---|---|---|---|---|---|
| | | ZONE | SYM | DESCRIPTION | DATE | APPROVAL |
| | | | | | | |

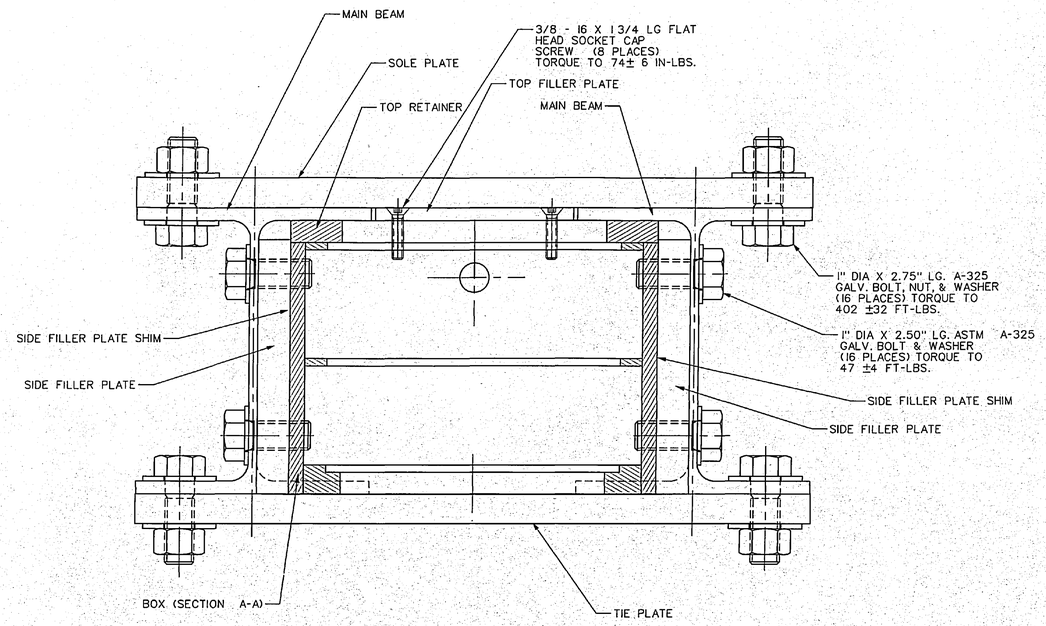


ASSEMBLY (D / MI)
SCALE: 1:2

(BEARING & TUBE NOT SHOWN)

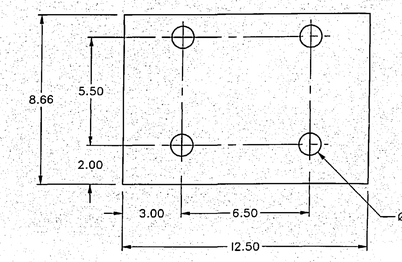


MAT'L.: ASTM A-36: 1" THICK (4) REQ'D.

SIDE FILLER PLATE
SCALE: 1:3

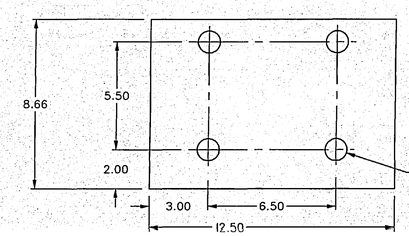


MAT'L.: ASTM A-36: 1/16" THICK (4) REQ'D.

SIDE FILLER PLATE SHIM
SCALE: 1:3

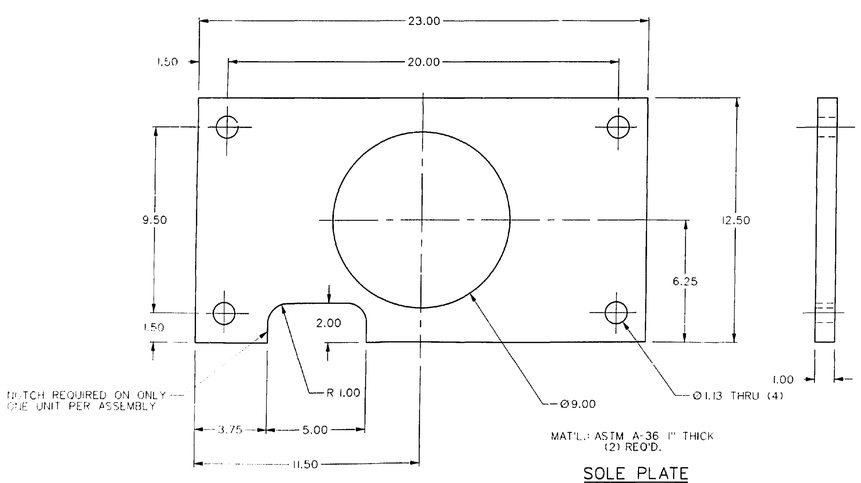


MAT'L.: ASTM A-36 1" THICK (2) REQ'D.

SOLE PLATE
SCALE: 1:3

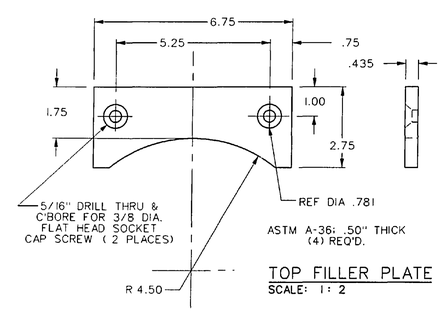


ASTM A-36: .50" THICK (4) REQ'D.

TOP FILLER PLATE
SCALE: 1:2

THIS COMPUTER DRAWING WAS CREATED IN MICROSTATION AND FILED UNDER THE DRAWING NUMBER

| | | | |
|---|---|---|---|
| SEE ENGINEERING RECORDS | | UNLESS OTHERWISE SPECIFIED<br>DIMENSIONS ARE IN INCHES<br>TOLERANCES ON<br>FRACTIONS ± 1/32<br>DECIMALS .XX ± .030<br>.XXX ± .010<br>ANGLES ± .5° | ORIGINAL DATE OF DRAWING FEB. 9, 2000<br>DRAFTER WAI T. S.<br>CHECKER SAM Z.<br>ENGINEER B. SZCZEPANIK<br>SUBMITTED S. ZERILLI<br>APPROVED S. BHOE 2/15/00 |
| 79K06921 sh 15 | | MATERIAL | |
| NEXT ASSY | USED ON | HEAT TREATMENT | |
| APPLICATION | | FINAL PROTECTIVE FINISH | |

WHEEL SUPPORT FOR SIDE FLAME DEFLECTORS AT LAUNCH PAD 39 A & B

JOHN F. KENNEDY SPACE CENTER, NASA
KENNEDY SPACE CENTER FLORIDA

| WEIGHT CHECKER | DATE | CODE 22264 | DWG SIZE F | 80K59799 |
|---|---|---|---|---|
| SCALE | UNIT WEIGHT | | SHEET 5 OF 5 | |