NOTICE — WHEN GOVERNMENT DRAWINGS, SPECIFICATIONS, OR OTHER DATA ARE USED FOR ANY PURPOSE OTHER THAN IN CONNECTION WITH A DEFINITELY RELATED GOVERNMENT PROCUREMENT OPERATION THE UNITED STATES GOVERNMENT THEREBY INCURS NO RESPONSIBILITY NOR ANY OBLIGATION WHATSOEVER; AND THE FACT THAT THE GOVERNMENT MAY HAVE FORMULATED, FURNISHED, OR IN ANY WAY SUPPLIED THE SAID DRAWINGS, SPECIFICATIONS, OR OTHER DATA IS NOT TO BE REGARDED BY IMPLICATION OR OTHERWISE AS IN ANY MANNER LICENSING THE HOLDER OR ANY OTHER PERSON OR CORPORATION, OR CONVEYING ANY RIGHTS OR PERMISSION TO MANUFACTURE, USE, OR SELL ANY PATENTED INVENTION THAT MAY IN ANY WAY BE RELATED THERETO.

— PAD 39B — LAYOUT/ELEVATION CONTROL —

FACILITY/SYSTEM	LAYOUT CONTROL	ELEVATION CONTROL
• HINGE COLUMN FDTN. • ROTARY BRIDGE RAIL • SSAT	LOCATION & ORIENTATION KEYED TO EXISTING MOUNT MECHANISMS NR 3 & 6 AS SHOWN ON THIS SHEET. (SEE SPECIFICATIONS SECTION 14A4)	BENCH MARK 39B TOP OF ROTARY BRIDGE RAIL = EL. 52'8.78" (± 1/16")
• SOUND SUPPRESSION WATER SYSTEM (ELEVATED TANK & PIPING)	CONTRACTOR TO ESTABLISH N-S & E-W BASELINES AS SHOWN ON THIS SHEET. NOTE: SEE SHEET M41.	BENCH MARK 39B
• HYPERGOLIC FUEL & OXIDIZER BUILDING • CROSS-COUNTRY PIPE SUPPORTS.	KEYED TO EXISTING ROADS SEE SHEETS C10-C13	BENCH MARK 39B
• NORTH PIPING BRIDGE	TO BE PARALLEL TO EXISTING MOUNT MECHANISMS NR 1 & 4, KEYED TO MM NR 1 AS SHOWN ON THIS SHEET.	BENCH MARK 39B
• SIDE FLAME DEFLECTOR RAIL & BASE PLATE SYSTEMS.	SEE SHEET S145	SEE SHEET S145
• SRB/ORBITER FLAME DEFLECTOR BASE PLATES	KEY TO EXISTING SATURN V BASE PLATES - SEE SHEET S130.	BENCH MARK 39B
• LOX TOWER • LH_2 TOWER • ECS TOWER	KEY TO EXISTING STRUCTURES SEE SHEETS S155-S175	KEY TO EXISTING STRUCTURES.

NOTES:

1. ACCURATE ESTABLISHMENT OF THE LOCATION OF THE ℄ OF THE NEW HINGE COLUMN FOUNDATION WITH RESPECT TO EXIST MOUNT MECHANISMS AS SHOWN ON THIS SHEET IS ESSENTIAL IN ORDER TO MINIMIZE BUILD-UP OF CONSTRUCTION TOLERANCES AS AFFECTING THE FUTURE MATE-UP WITH THE SHUTTLE.
2. THE CONTRACTOR'S SURVEY PROCEDURE, TEMPORARY BENCH MARKS, ETC. SHALL BE CONFIRMED BY THE CONTRACTING OFFICER BEFORE PROCEEDING WITH ANY WORK ASSOCIATED WITH EXCAVATION, ETC. AT THE HINGE COLUMN FOUNDATION LOCATION.
3. ALTHOUGH VARIOUS SHEETS WITHIN THIS DRAWING PACKAGE INDICATE DIMENSIONS OF THE HINGE COLUMN, SSAT, ETC. TO VARIOUS OTHER POINTS (℄ AND ℄ SATURN V, ETC.), THE LOCATIONS SHOWN & DESCRIBED ON THIS SHEET ARE THE ONLY CONTROLS TO BE USED. ALL REFERENCES ON OTHER SHEETS SHALL BE VIEWED AS REFERENCE OR INFORMATION ONLY.
4. ALL DIMENSIONS MARKED "REF." ARE FOR "INFORMATION ONLY" AND SHALL NOT BE USED FOR CONTROL OR LAYOUT PURPOSES.

SATURN V (REF.)

THE ℄ OF THE SATURN V IS SHOWN & REFERENCED ON MANY SHEETS IN THIS DRAWING PACKAGE. THE SATURN V WAS THE LAUNCH VEHICLE USED IN THE APOLLO MOON LANDING PROGRAM. THE LAUNCH PAD WAS ORIGINALLY DESIGED FOR THE SATURN V VEHICLE. THE DIMENSIONS SHOWN TO THE ℄ SATURN V ARE INTENDED FOR REFERENCE PURPOSES FOR THE ARCHITECT-ENGINEER, NASA & OTHER DESIGN AGENCIES AND HAVE NO CONTROL FEATURES ASSOCIATED WITH CONSTRUCTION UNDER THIS CONTRACT.

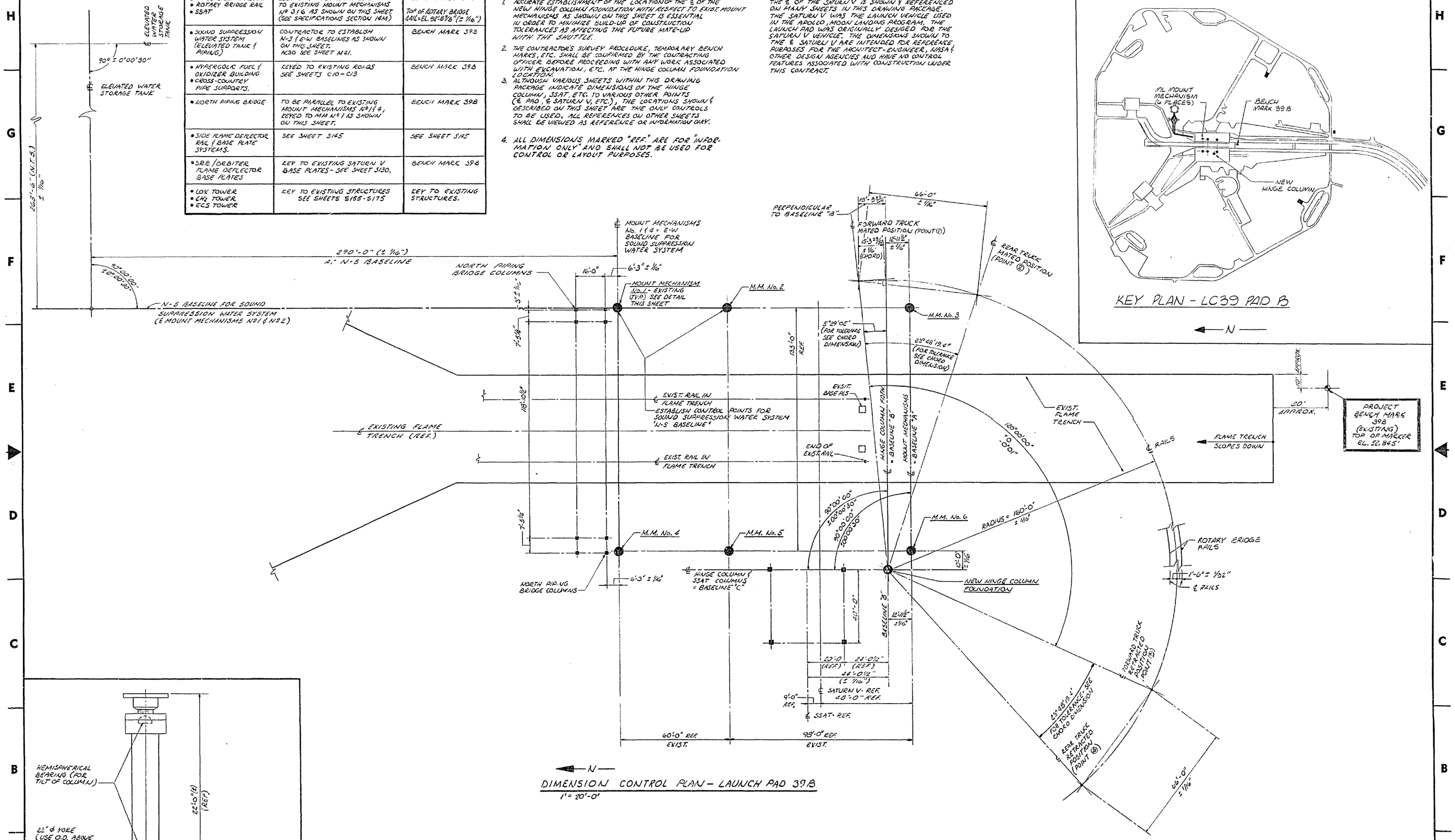

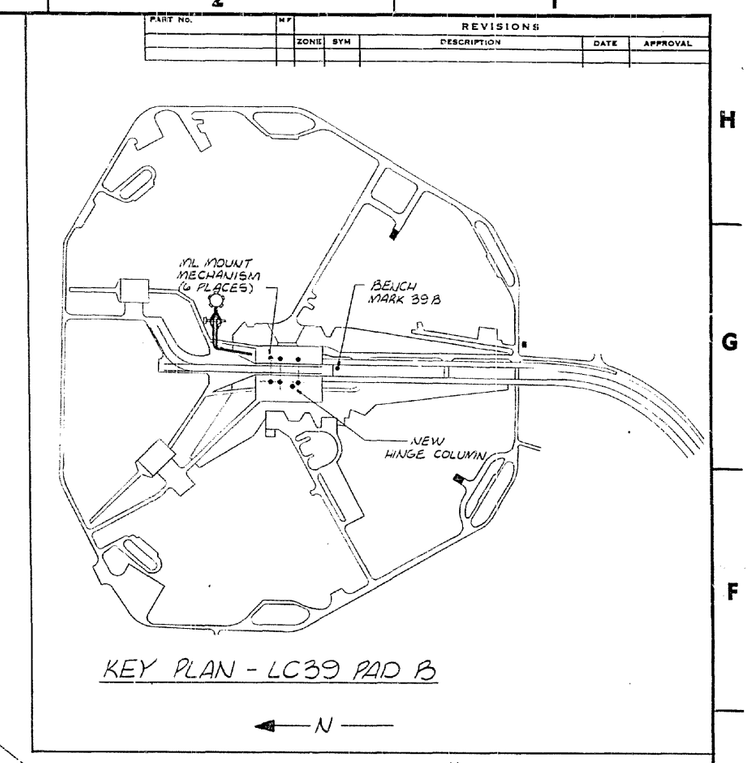

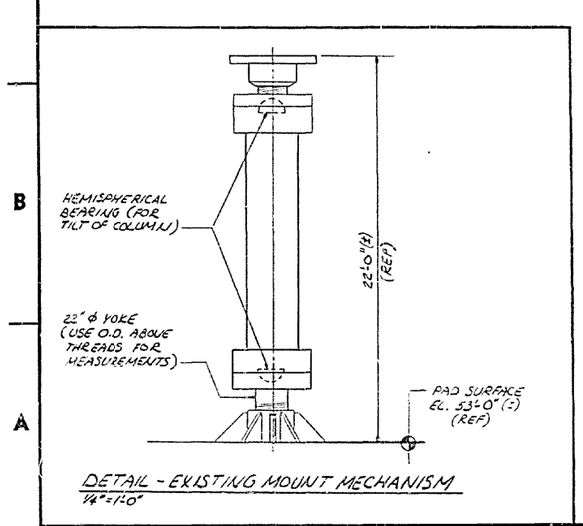

GRAPHIC SCALES

20 10 0 20 40 — 1 IN = 20 FT.

2 1 0 2 4 6 8 10 — 1/2 IN. = 1 FT.

ORIGINAL DATE OF DRAWING 11-22-77	MODIFICATIONS TO LAUNCH PAD 39B FOR SPACE SHUTTLE - TASK I -		JOHN F. KENNEDY SPACE CENTER, NASA KENNEDY SPACE CENTER, FLORIDA
DRAFTSMAN CJS / CHECKED CHP			
ENGINEER CHP / ENGINEER HEO	PAD 39B DIMENSION CONTROL AND BENCH MARK		CODE IDENT NO. F 79K10338
SUBMITTED / APPROVED	SCALE: NOTED	DATE 7/12/79	SIZE C2
REYNOLDS, SMITH AND HILLS ARCHITECTS • ENGINEERS • PLANNERS INCORPORATED JACKSONVILLE, FLORIDA			SHEET 17 OF

PART NO.	NF	ZONE	SYM	REVISIONS DESCRIPTION	DATE	APPROVAL

ASC FORM 21-9 (REV. 9/65)

PRINT ½-SIZE

NOTICE — WHEN GOVERNMENT DRAWINGS, SPECIFICATIONS, OR OTHER DATA ARE USED FOR ANY PURPOSE OTHER THAN IN CONNECTION WITH A DEFINITELY RELATED GOVERNMENT PROCUREMENT OPERATION, THE UNITED STATES GOVERNMENT THEREBY INCURS NO RESPONSIBILITY NOR ANY OBLIGATION WHATSOEVER; AND THE FACT THAT THE GOVERNMENT MAY HAVE FORMULATED, FURNISHED, OR IN ANY WAY SUPPLIED THE SAID DRAWINGS, SPECIFICATIONS OR OTHER DATA IS NOT TO BE REGARDED BY IMPLICATION OR OTHERWISE AS IN ANY MANNER LICENSING THE HOLDER OR ANY OTHER PERSON OR CORPORATION, OR CONVEYING ANY RIGHTS OR PERMISSION TO MANUFACTURE, USE, OR SELL ANY PATENTED INVENTION THAT MAY IN ANY WAY BE RELATED THERETO.

REVISIONS				
ZONE	SYM	DESCRIPTION	DATE	APPROVAL

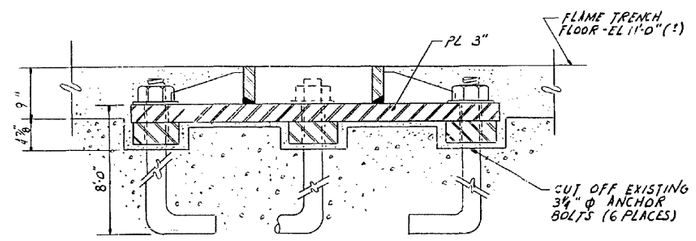

SECTION (G) 1"=1'-0" S130 S130

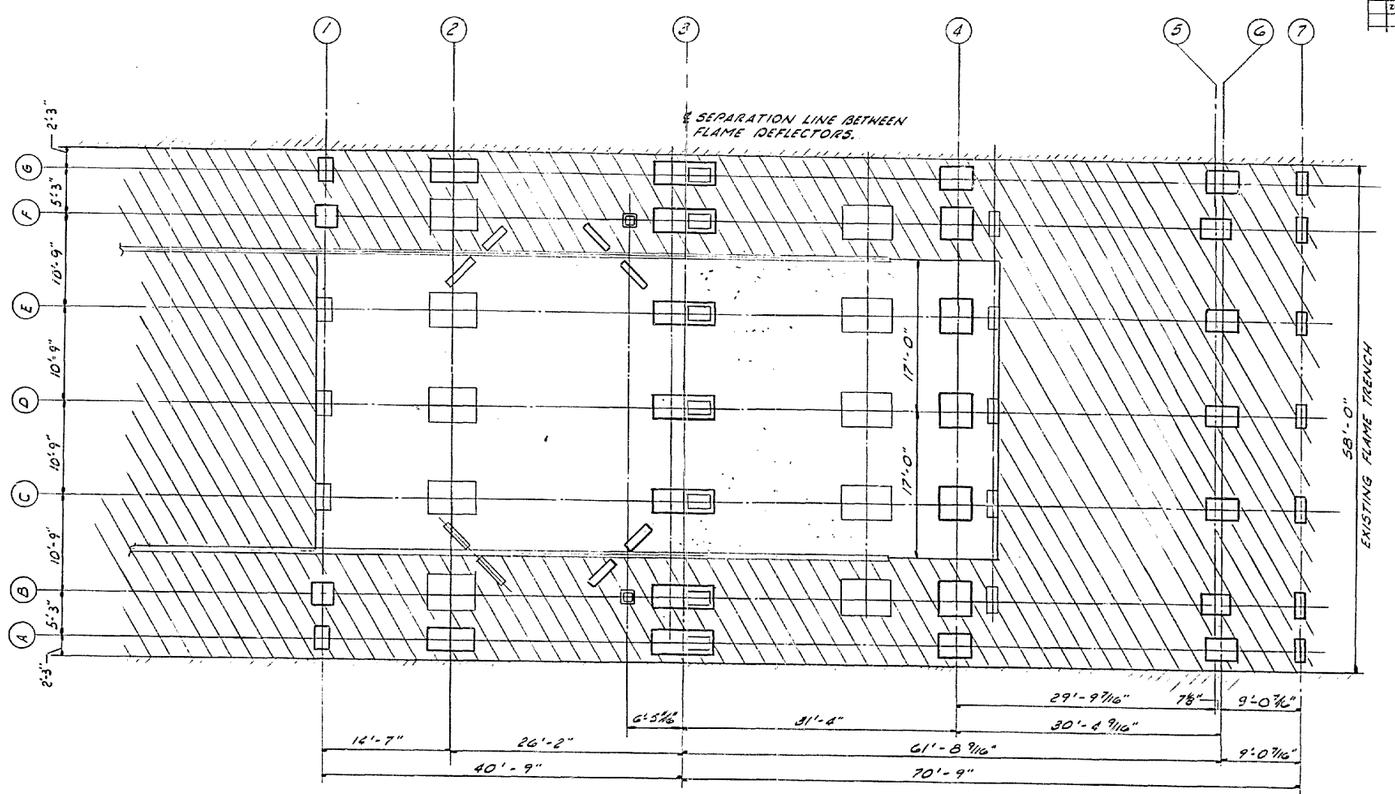

MODIFIED PLAN - SRB/ORBITER FLAME DEFLECTOR BEARING PADS - LAUNCH SITE

1/8" = 1'-0"

SEE SHEET S131

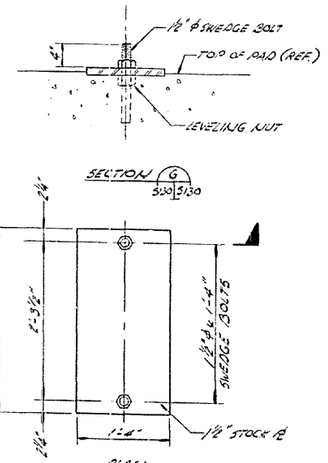

DETAIL (F) EXIST. BEARING PAD

1"=1'-0" S130 S130

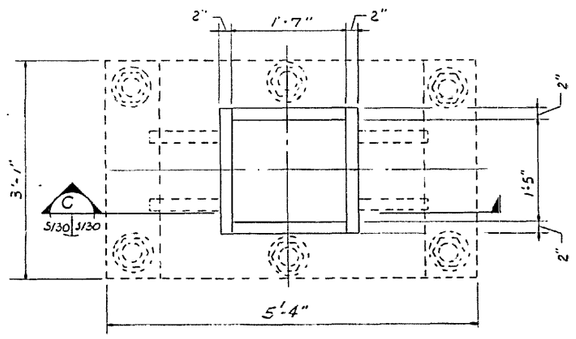

PLAN

DETAIL (B) EXISTING THRUST LOCK ANCHOR

1"=1'-0" S130 S130

REMOVE EXISTING THRUST LOCK ANCHORS - 2 PLACES.

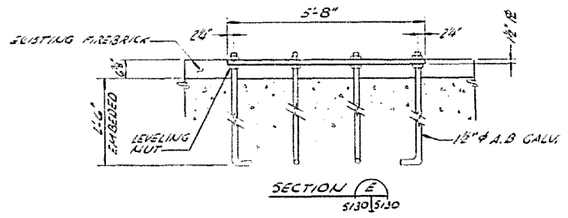

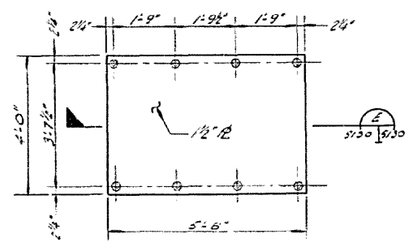

PLAN

GRID LINE (B) REMOVE PADS - TYP. 5 PLACES

DETAIL (D) EXISTING BEARING PAD

1"=1'-0" S130 S130

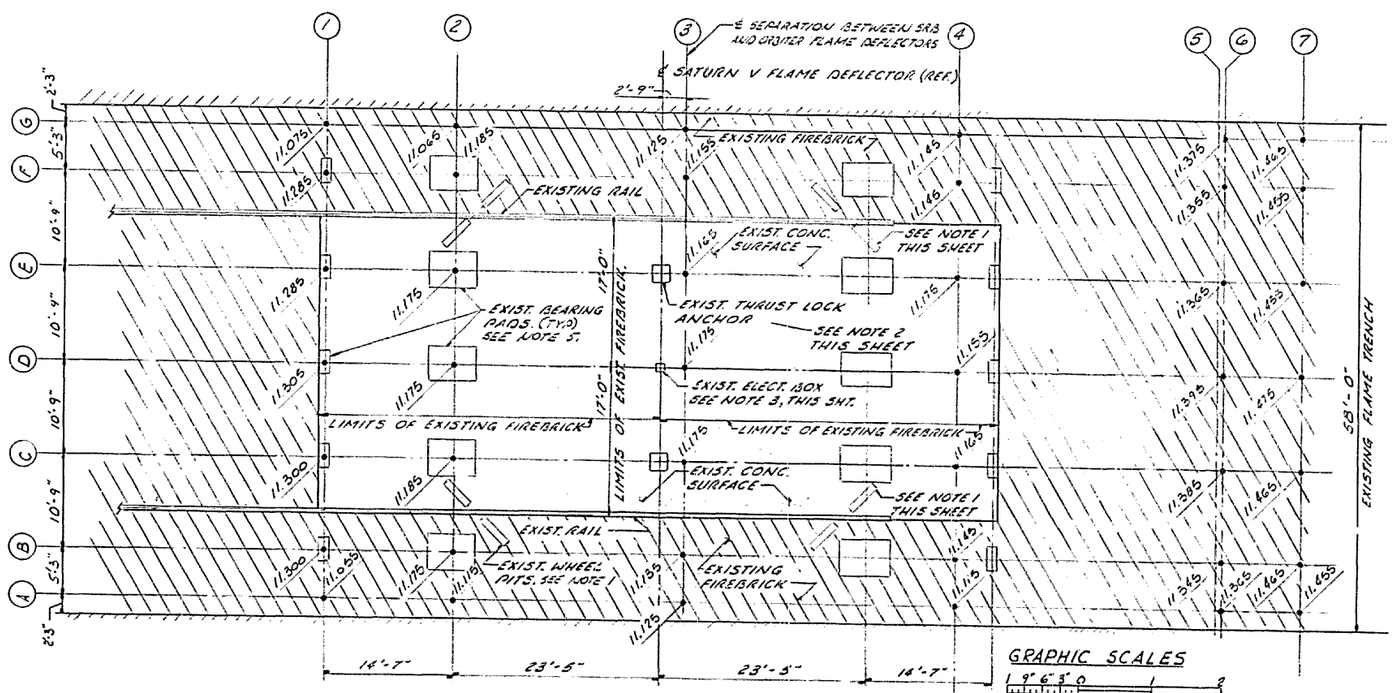

REMOVAL PLAN - EXISTING SATURN V FLAME DEFLECTOR BEARING PADS - LAUNCH SITE

1/8" = 1'-0"

N

NOTES:

1. EXISTING WHEEL PITS AT 2 LOCATIONS TO BE FILLED WITH CONCRETE. EXISTING CONFIGURATION SIMILAR TO DET (A) S131 S130
2. EXISTING THRUST LOCK ANCHOR TO BE REMOVED - EXISTING CONFIGURATION SEE DET (B) S130 S130
3. REMOVE EXISTING JUNCTION BOX. FILL EXISTING CONDUIT WITH GROUT.
4. ELEVATIONS SHOWN ARE EXISTING - SEE SHEET C2 FOR PROJECT BENCH MARK.
5. ALL PADS ON GRID LINES (1) & (B) SHOWN AS EXISTS (AS TYP.) ARE TO BE REMOVED TOGETHER WITH THEIR ACCOMPANYING ANCHOR BOLTS AND SHALL BE REPLACED WITH NEW AS SHOWN. SEE DETAILS (D) S130 S130 & (E) S130 S130

GRAPHIC SCALES

1 IN. = 1 FT.

1/8 IN. = 1 FT.

REYNOLDS, SMITH AND HILLS ARCHITECTS • ENGINEERS • PLANNERS INCORPORATED JACKSONVILLE, FLORIDA	ORIGINAL DATE OF DRAWING 11-22-77; DRAFTSMAN SGH; CHECKED EH; ENGINEER EH; ENGINEER MPP; ARCHITECT; APPROVED W. E. Gregg 3-8-78	MODIFICATIONS TO LAUNCH PAD 39B FOR SPACE SHUTTLE - TASK I - SRB/ORBITER FLAME DEFLECTOR—MODS TO FLAME TRENCH—PLANS	JOHN F. KENNEDY SPACE CENTER, NASA KENNEDY SPACE CENTER, FLORIDA
	SCALE: NOTED	DATE 77127-001	DWG SIZE F; 79K10338; S130; SHEET 186 OF

PRINT ½-SIZE

NOTICE — WHEN GOVERNMENT DRAWINGS, SPECIFICATIONS, OR OTHER DATA ARE USED FOR ANY PURPOSE OTHER THAN IN CONNECTION WITH A DEFINITELY RELATED GOVERNMENT PROCUREMENT OPERATION THE UNITED STATES GOVERNMENT THEREBY INCURS NO RESPONSIBILITY NOR ANY OBLIGATION WHATSOEVER; AND THE FACT THAT THE GOVERNMENT MAY HAVE FORMULATED, FURNISHED, OR IN ANY WAY SUPPLIED THE SAID DRAWINGS, SPECIFICATIONS OR OTHER DATA IS NOT TO BE REGARDED BY IMPLICATION OR OTHERWISE AS IN ANY MANNER LICENSING THE HOLDER OR ANY OTHER PERSON OR CORPORATION, OR CONFERRING NO RIGHTS AND ANY RIGHTS OR PERMISSION TO MANUFACTURE, USE, OR SELL ANY PATENTED INVENTION THAT MAY IN ANY WAY BE RELATED THERETO.

PART NO.	NF	ZONE	SYM	REVISIONS DESCRIPTION	DATE	APPROVAL

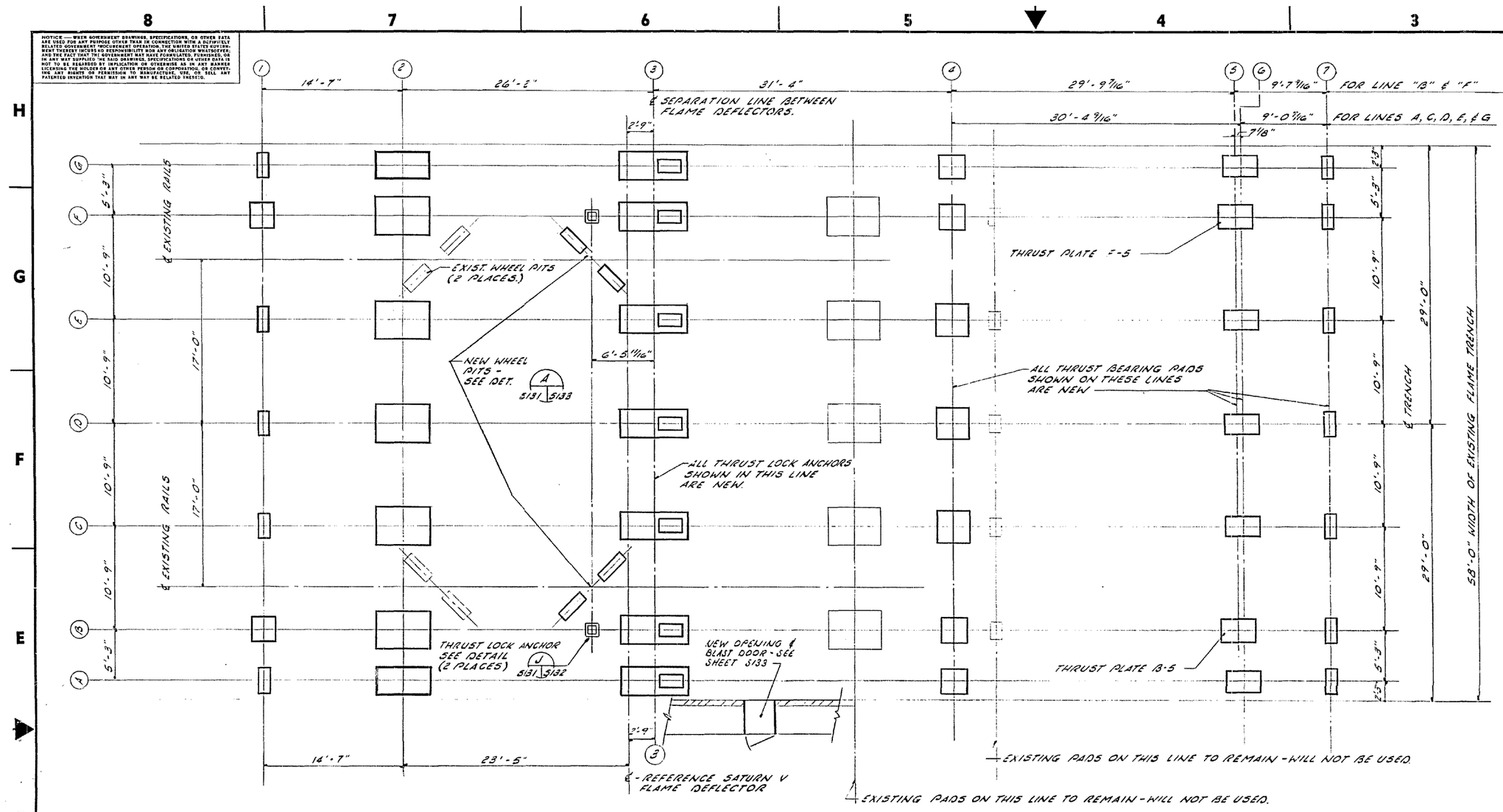

PLAN - SRB & ORBITER FLAME DEFLECTOR BEARING PADS - FLAME TRENCH

3/16" = 1'-0"

NOTES:

1. ALL FLAME DEFLECTOR BASE PLATES SHALL BE GROUTED IN TO MAKE FULL CONTACT WITH CORRESPONDING TRENCH BEARING PADS IN THE FINAL FLAME DEFLECTOR POSITION.
2. ALL FLAME DEFLECTOR HORIZONTAL THRUST BEARING PLATES SHALL BE IN FULL CONTACT WITH EACH OTHER IN THE FINAL FLAME DEFLECTOR POSITION.
3. ALL GROUT TO BE "NON-SHRINK" COMPRESSIVE STRENGTH TO BE 7000 P.S.I. AFTER 7 DAYS. SEE NOTE 26, SHT. S1. WHERE GROUT WOULD BE OTHERWISE EXPOSED, PROVIDE MORTAR CAP CONSISTING OF ONE (1) PART PORTLAND CEMENT, TWO (2) PARTS COAC. SAND, AND SUFFICIENT WATER ADDED TO MAKE A STIFF, PLACEABLE MORTAR.
4. TO PROVIDE PROPER ALIGNMENT AND FULL CONTACT, ESTABLISH THE EXACT CENTER TO CENTER DIMENSIONS OF THE BASE PLATES ON THE COMPLETED SRB FLAME DEFLECTOR PRIOR TO ESTABLISHING THE LOCATIONS FOR THE INSTALLATION OF THE SRB FLAME DEFLECTOR BEARING PADS. THE BEARING PADS SHALL BE INTER-FITTED TO THE SRB FLAME DEFLECTOR BASE PLATES.
5. PRIOR TO GROUTING FLAME DEFLECTOR BEARING PADS, VERIFY FULL CONTACT AND ELEVATION 48'-11 5/8" REQUIRED (SEE SHEET S129).
6. WEIGHT OF THE FLAME DEFLECTORS SHALL NOT BE IMPOSED ON THE GROUT UNTIL THE GROUT HAS SET PER THE GROUT MANUFACTURER'S INSTRUCTIONS, BUT NOT LESS THAN THREE DAYS.

THRUST BEARING PAD DETAIL SCHEDULE

GRID LINES	1	2	3	4	5	6	7	
A & G	E S131 S131	G S131 S131	D S131 S132	H S131 S131		B S131 S131	D S131 S131	TRUSS A1A1
B & F	F S131 S131	K S131 S132	A S131 S131	H S131 S131	C S131 S131		D S131 S131	TRUSS B1B1
C & E	E S131 S131	K S131 S132	D S131 S131	A S131 S131		B S131 S131	D S131 S131	TRUSS C1C1
D	E S131 S131	K S131 S132	D S131 S132	A S131 S131		B S131 S131	D S131 S131	TRUSS D1D1

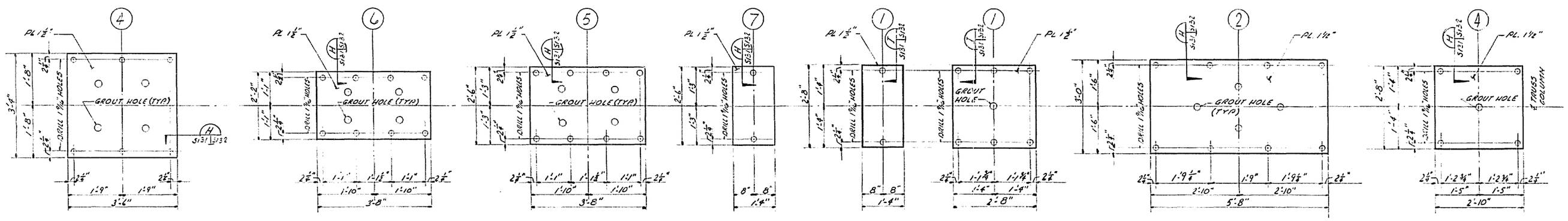

BEARING PAD DETAIL (A) 3/4"=1'-0" S131 S131

BEARING PAD DETAIL (B) 3/4"=1'-0" S131 S131

BEARING PAD DETAIL (C) 3/4"=1'-0" S131 S131

BEARING PAD DETAIL (D) 3/4"=1'-0" S131 S131

BEARING PAD DETAIL (E) 3/4"=1'-0" S131 S131

BEARING PAD DETAIL (F) 3/4"=1'-0" S131 S131

BEARING PAD DETAIL (G) 3/4"=1'-0" S131 S131

BEARING PAD DETAIL (H) 3/4"=1'-0" S131 S131

N — FOR ALL BEARING PAD DETAILS -

GRAPHIC SCALES

REYNOLDS, SMITH AND HILLS
ARCHITECTS • ENGINEERS • PLANNERS
INCORPORATED
JACKSONVILLE, FLORIDA

ORIGINAL DATE OF DRAWING	11-22-77
DRAFTSMAN	PSA
CHECKED	EH
ENGINEER	EH
ENGINEER	HCS
SUBMITTED	
APPROVED	3-8-78

MODIFICATIONS TO LAUNCH PAD 39 B FOR SPACE SHUTTLE
- TASK I -

SRB/ORBITER FLAME DEFLECTOR—MODS TO FLAME TRENCH—PLAN & DETAILS

JOHN F. KENNEDY SPACE CENTER, NASA
KENNEDY SPACE CENTER, FLORIDA

SCALE NOTED | DATE | 77127-001 | S131

CODE IDENT NO. F | 79K10338

SHEET 157 OF

PRINT ½-SIZE

NOTICE — WILD MOVEMENT DRAWINGS, SPECIFICATIONS, OR OTHER DATA PROVIDED IN CONNECTION WITH THE PROPOSED CONSTRUCTION OF THE SPACE SHUTTLE RELATED MOVEMENT PROGRAMS OPERATION, THE UNITED STATES GOVERNMENT DOES NOT REPRESENT THAT THE SAME WILL BE SUITABLE FOR ANY PURPOSE AND THE FACT THAT THE GOVERNMENT MAY HAVE FURNISHED, FURNISHED, OR SPECIFIED A DESIGN OR PROCEDURE SHALL NOT BE CONSIDERED AS A REPRESENTATION THAT IT BE BEARING OR IMPLICATION OR OTHERWISE IN ANY WAYS LICENSING THE HOLDER OR ANY OTHER PERSON OR CORPORATION, OR CONVEY, ANY RIGHTS OR PERMISSION TO MANUFACTURE, USE OR SELL ANY PATENTED INVENTION THAT MAY IN ANY WAY BE RELATED THERETO.

PART No.	WT	ZONE	SYM	REVISIONS DESCRIPTION	DATE	APPROVAL

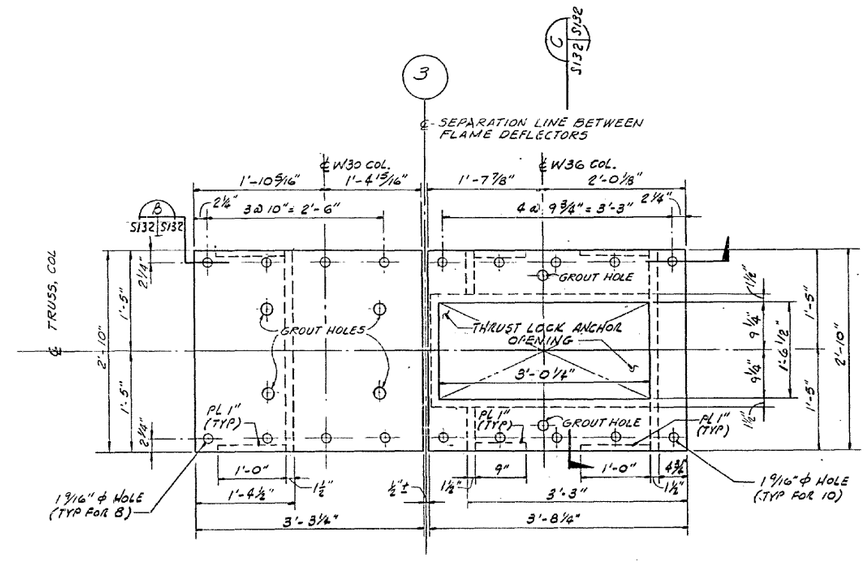

PLAN

BEARING PAD DETAIL (A) S131|S132
1" = 1'-0"

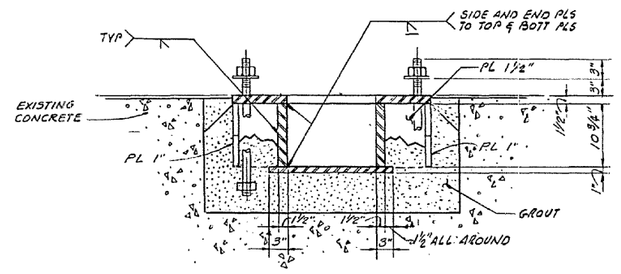

SECTION (F) S132|S132
1" = 1'-0"

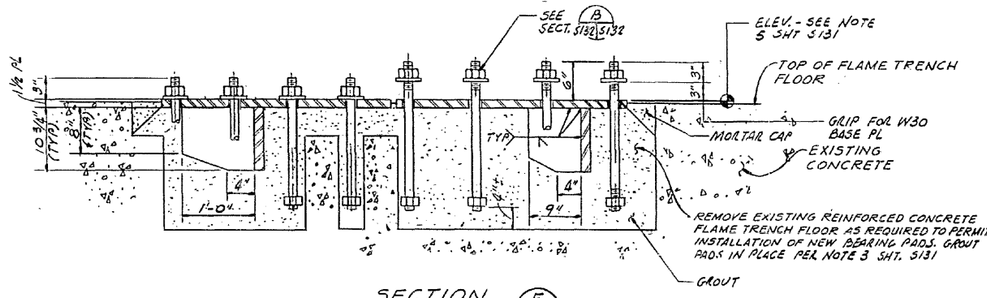

SECTION (E) S132|S132
1" = 1'-0"

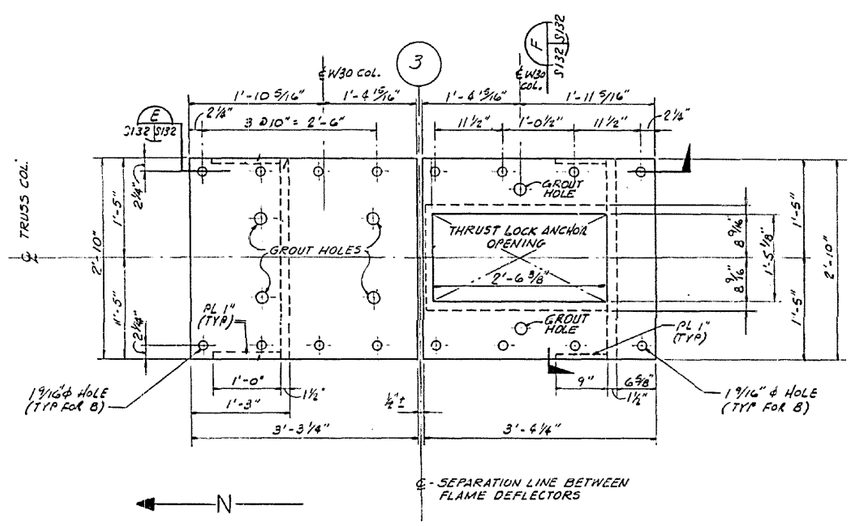

PLAN

BEARING PAD DETAIL (D) S131|S132
1" = 1'-0"

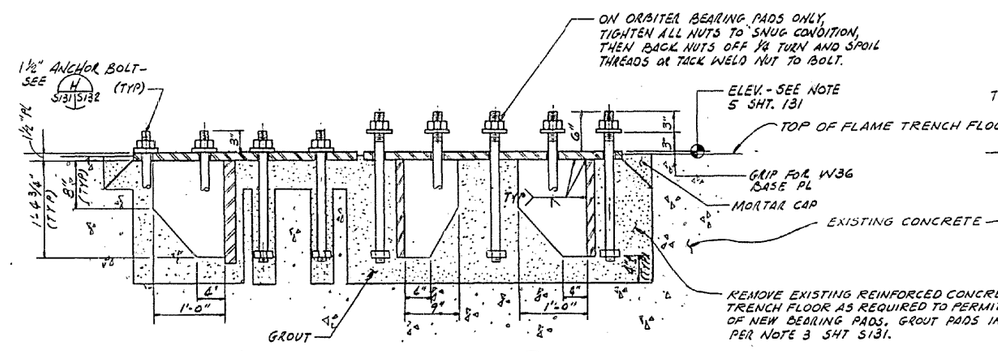

SECTION (B) S132|S132
1" = 1'-0"

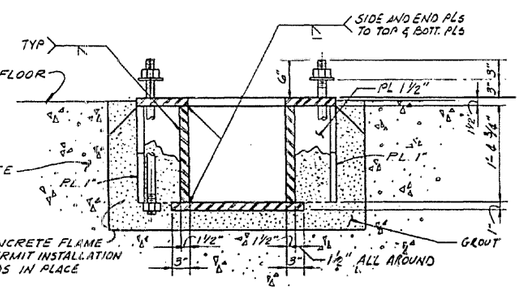

SECTION (C) S132|S132
1" = 1'-0"

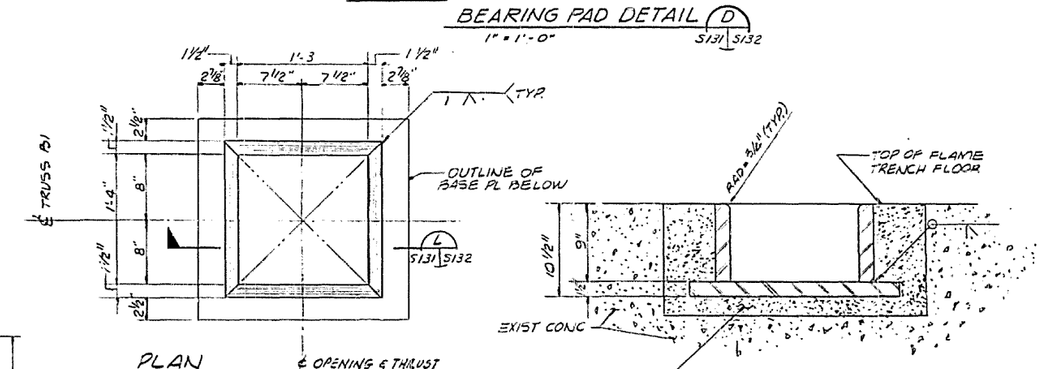

PLAN

THRUST LOCK ANCHOR - DETAIL (J) S131|S132
1½" = 1'-0"

SECTION (L) S132|S132
1½" = 1'-0"

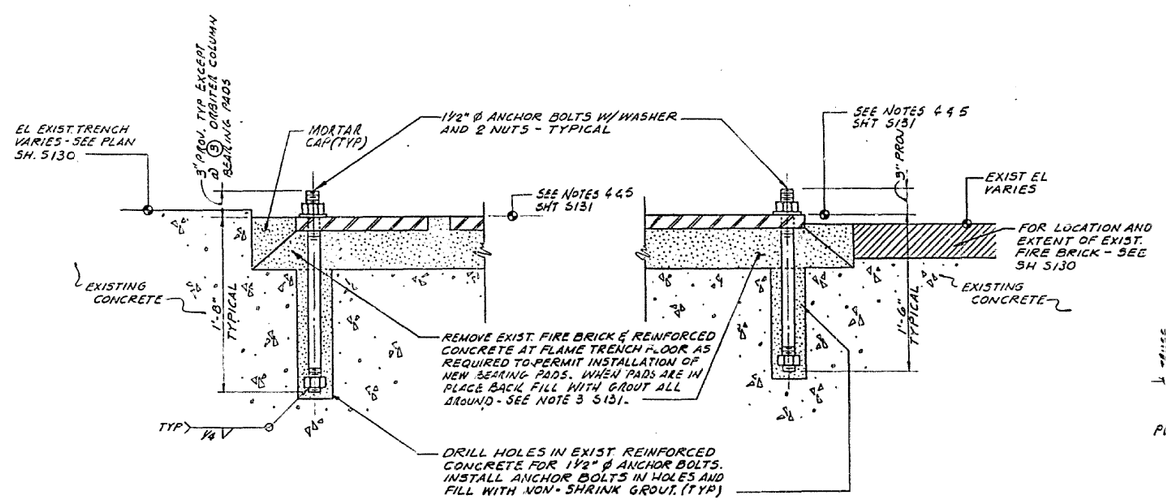

BEARING PAD & ANCHOR BOLT DETAIL (H) S131|S132
1½" = 1'-0"

BEARING PAD & ANCHOR BOLT DETAIL (I) S131|S132
1½" = 1'-0"

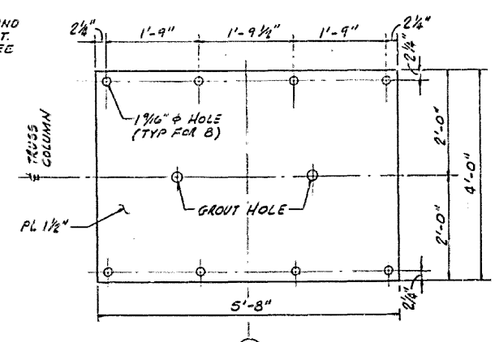

BEARING PAD DETAIL (K) S131|S132
3/4" = 1'-0"

GRAPHIC SCALES

1' 9" 6" 3" 0 1' 2' — 1 IN = 1 FT

1' 9" 6" 3" 0 1' — 1/12 IN = 1 FT

REYNOLDS, SMITH AND HILLS
ARCHITECTS • ENGINEERS • PLANNERS
INCORPORATED
JACKSONVILLE, FLORIDA

ORIGINAL DATE OF DRAWING 11-22-77	MODIFICATIONS TO LAUNCH PAD 39B FOR SPACE SHUTTLE - TASK I -	JOHN F. KENNEDY SPACE CENTER, NASA	
DRAFTSMAN PSH / CHECKED EH		KENNEDY SPACE CENTER, FLORIDA	
ENGINEER EH / ENGINEER HEB	SRB/ORBITER FLAME DEFLECTOR-THRUST LOCK ANCHOR DETAILS	CODE IDENT NO. F	79K10338
SUBMITTED			
APPROVED 3-8-78	DATE	SCALE NOTED / 77127-001	S132
		SHEET 184 OF	

PRINT ½-SIZE

NOTICE — WHEN GOVERNMENT DRAWINGS, SPECIFICATIONS, OR OTHER DATA IS USED FOR ANY PURPOSE OTHER THAN IN CONNECTION WITH A DEFINITELY RELATED GOVERNMENT PROCUREMENT OPERATION, THE UNITED STATES GOVERNMENT THEREBY INCURS NO RESPONSIBILITY, NOR ANY OBLIGATION WHATSOEVER; AND THE FACT THAT THE GOVERNMENT MAY HAVE FORMULATED, FURNISHED, OR IN ANY WAY SUPPLIED THE SAID DRAWINGS, SPECIFICATIONS, OR OTHER DATA IS NOT TO BE REGARDED BY IMPLICATION OR OTHERWISE AS IN ANY MANNER LICENSING THE HOLDER OR ANY OTHER PERSON OR CORPORATION, OR CONVEYING ANY RIGHTS OR PERMISSION TO MANUFACTURE, USE, OR SELL ANY PATENTED INVENTION THAT MAY IN ANY WAY BE RELATED THERETO.

PART NO.	W.F.	ZONE	SYM	REVISIONS DESCRIPTION	DATE	APPROVAL

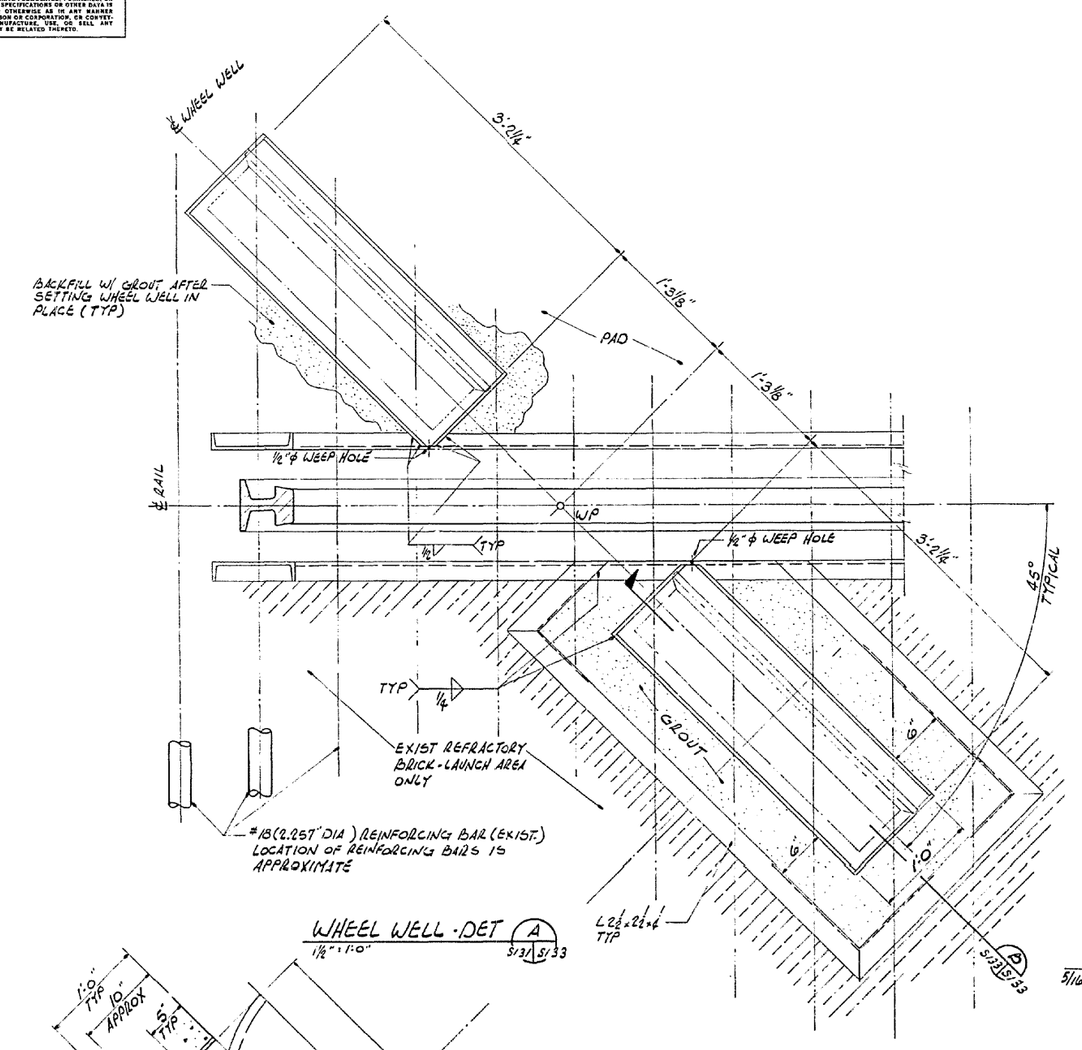

WHEEL WELL - DET (A) S133 S133
1½" = 1'-0"

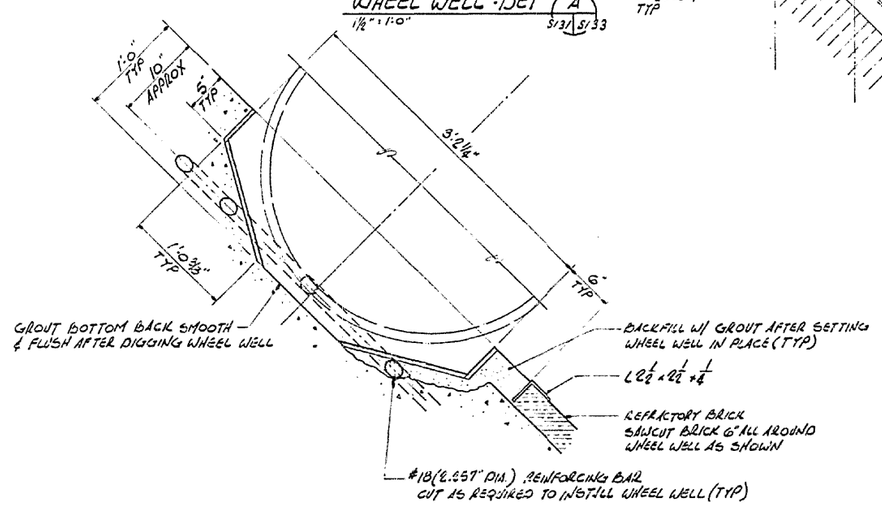

SECTION (B) (TYPICAL)
1½" = 1'-0" S133 S133

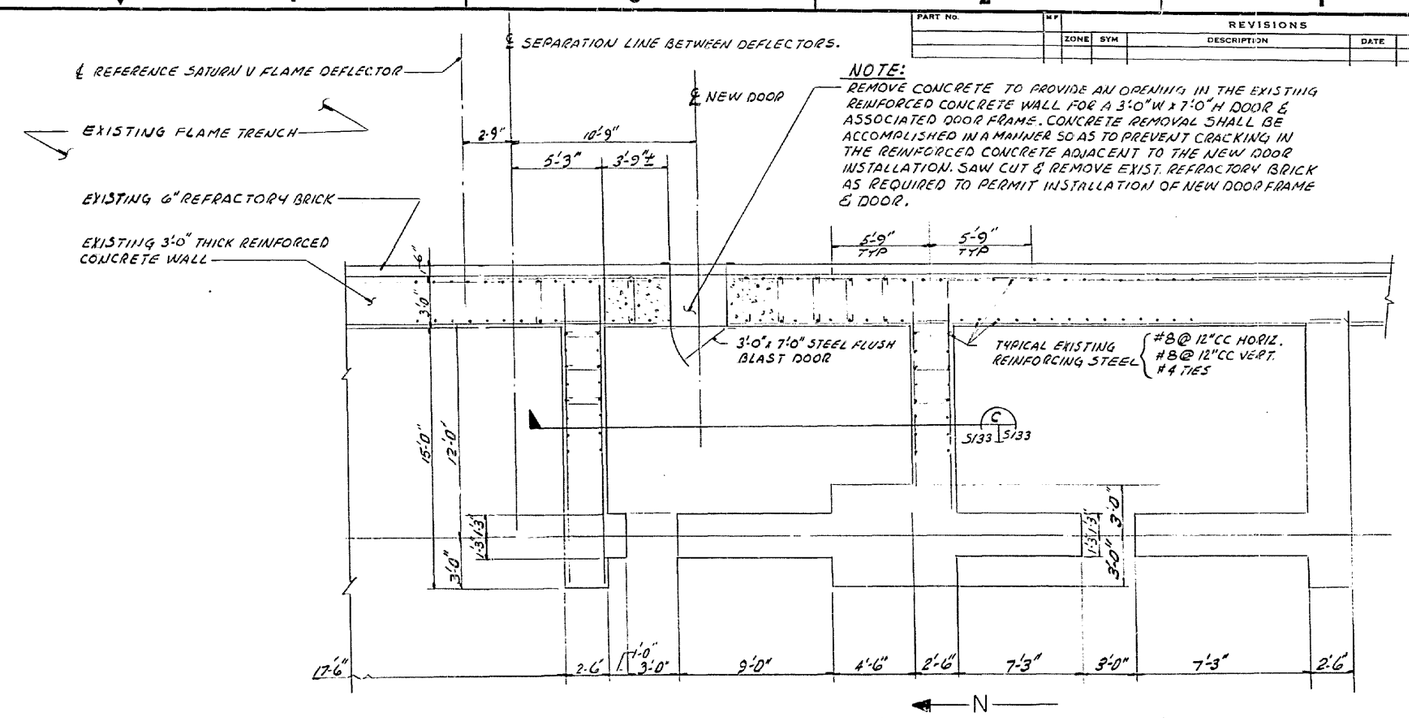

NOTE:
REMOVE CONCRETE TO PROVIDE AN OPENING IN THE EXISTING REINFORCED CONCRETE WALL FOR A 3'-0" W x 7'-0" H DOOR & ASSOCIATED DOOR FRAME. CONCRETE REMOVAL SHALL BE ACCOMPLISHED IN A MANNER SO AS TO PREVENT CRACKING IN THE REINFORCED CONCRETE ADJACENT TO THE NEW DOOR INSTALLATION. SAW CUT & REMOVE EXIST. REFRACTORY BRICK AS REQUIRED TO PERMIT INSTALLATION OF NEW DOOR FRAME & DOOR.

PARTIAL FLOOR PLAN - EL = 10'-7"±
1/4" = 1'-0"

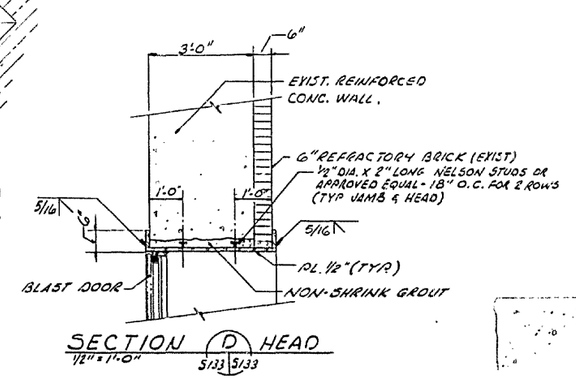

SECTION (D) HEAD
1½" = 1'-0" S133 S133

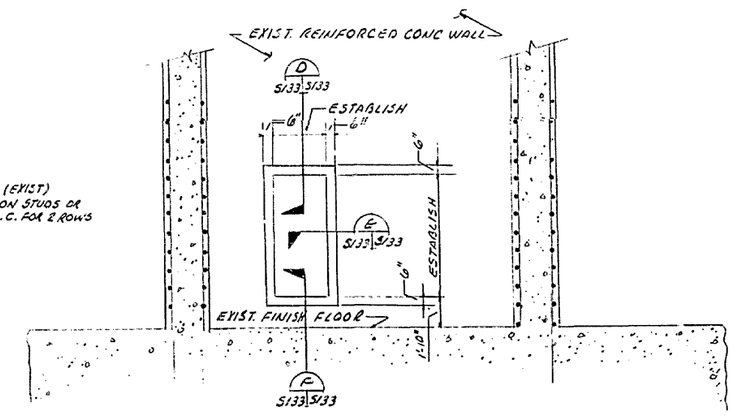

SECTION (C) DOOR
1/4" = 1'-0" S133 S133

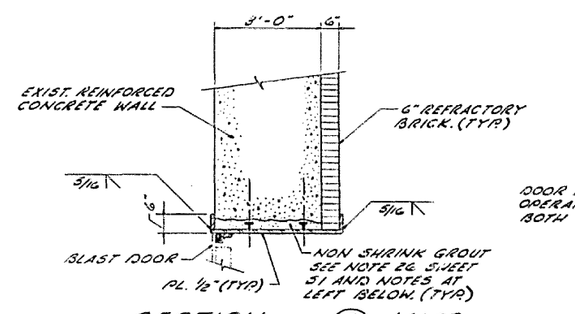

SECTION (E) JAMB
1½" = 1'-0" S133 S133

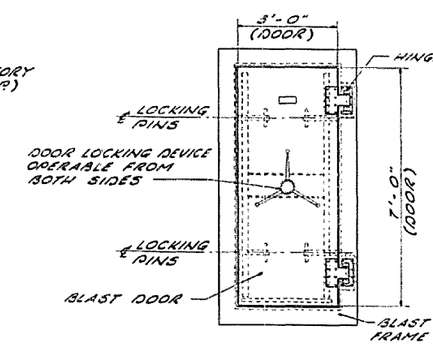

BLAST DOOR & FRAME ASSY.

NOTE: (CONTINUED)
DOOR THICKNESS - NOT LESS THAN 4".
FACE PLATE NOT LESS THAN 1/4" THICK.
NUMBER OF LATCH POINTS - 4.
LOCATION - 2 EACH JAMB.
SIZE OF LATCHPOINTS - 1 3/4" DIA. MIN.
OVERLY MFG. COMPANY, BLAST DOOR OR APPROVED EQUAL.
CONTRACTOR SHALL HAVE THE OPTION OF INSTALLING THE BLAST DOOR FRAME & DOOR IN THE OPENING BY WELDING THE FRAME TO THE 1/4" THICK C-STEEL PLATE, OR BY USING THE 1/2" THICK PLATE AS THE DOOR FRAME BY REPAINTING THE 1/2" PLATE AS REQD. CONTRACTOR SHALL ADJUST AS REQUIRED TO ASSURE SMOOTH AND PROPER OPERATION.

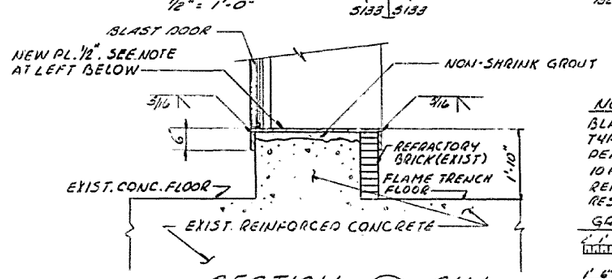

SECTION (F) SILL
1½" = 1'-0" S133 S133

NOTES:

A. INSTALL NEW ½" PLATE (STL) & MAINTAIN SQUARE FOR SUBSEQUENT DOOR INSTALLATION. PROVIDE HOLE IN STL. PLATE TO PERMIT GROUT TO BE PUMPED INTO SPACE BETWEEN PLATE & EXISTING CONCRETE.

B. CONTRACTOR SHALL BE RESPONSIBLE FOR PROPER INSTALLATION OF BLAST DOOR FRAME AND DOOR IN STRICT ACCORDANCE WITH THE MANUFACTURER'S PRINTED INSTRUCTIONS, AND FIELD MEASUREMENTS AFTER CUTTING NEW OPENING THRU EXISTING WALL.

NOTE:
BLAST DOOR & FRAME SHALL BE STEEL FLUSH TYPE - PEAK - FREE AIR PRESSURE - 5 P.S.I. PEAK INCIDENT PRESSURE (REFLECTED PRESSURE - 10 P.S.I) DURATION OF POSITIVE PHASE : 0.70 SEC. - REBOUND : 50% PROVIDE WEATHERTITE, BLAST RESISTANT DOOR EDGE SEALS. (CONT. AT RIGHT)

GRAPHIC SCALES
1/4 IN. = 1 FT
1/4 IN. = 1 FT
1/16 IN. = 1 FT

REYNOLDS, SMITH AND HILLS
ARCHITECTS • ENGINEERS • PLANNERS
INCORPORATED
JACKSONVILLE, FLORIDA

ORIGINAL DATE OF DRAWING 11-22-77	MODIFICATIONS TO LAUNCH PAD 39 B FOR SPACE SHUTTLE - TASK I -		JOHN F. KENNEDY SPACE CENTER, NASA
DRAFTSMAN CPP CHECKED EH			KENNEDY SPACE CENTER, FLORIDA
CALCULATED			
DESIGNED EH CHECKED HRB	SRB/ORBITER FLAME DEFLECTOR-WHEEL PIT & BLAST DOOR DETAILS		DWG SIZE F 79K10338
SUBMITTED			
APPROVED 3-6-78		DATE 77127-001	S133
SCALE NOTED			SHEET 189 OF

PRINT ½-SIZE

NOTICE — WHEN GOVERNMENT DRAWINGS, SPECIFICATIONS, OR OTHER DATA ARE USED FOR ANY PURPOSE OTHER THAN IN CONNECTION WITH A DEFINITELY RELATED GOVERNMENT PROCUREMENT OPERATION THE UNITED STATES GOVERNMENT THEREBY INCURS NO RESPONSIBILITY NOR ANY OBLIGATION WHATSOEVER; AND THE FACT THAT THE GOVERNMENT MAY HAVE FORMULATED, FURNISHED, OR IN ANY WAY SUPPLIED THE SAID DRAWINGS, SPECIFICATIONS OR OTHER DATA IS NOT TO BE REGARDED BY IMPLICATION OR OTHERWISE AS IN ANY MANNER LICENSING THE HOLDER OR ANY OTHER PERSON OR CORPORATION, OR CONVEYING ANY RIGHTS OR PERMISSION TO MANUFACTURE, USE OR SELL ANY PATENTED INVENTION THEREUNDER OR MAY BE RELATED THERETO.

PART NO.	MF	REVISIONS				
		ZONE	SYM	DESCRIPTION	DATE	APPROVAL
			B	MISC. CHANGE	10-6-78	[illegible]

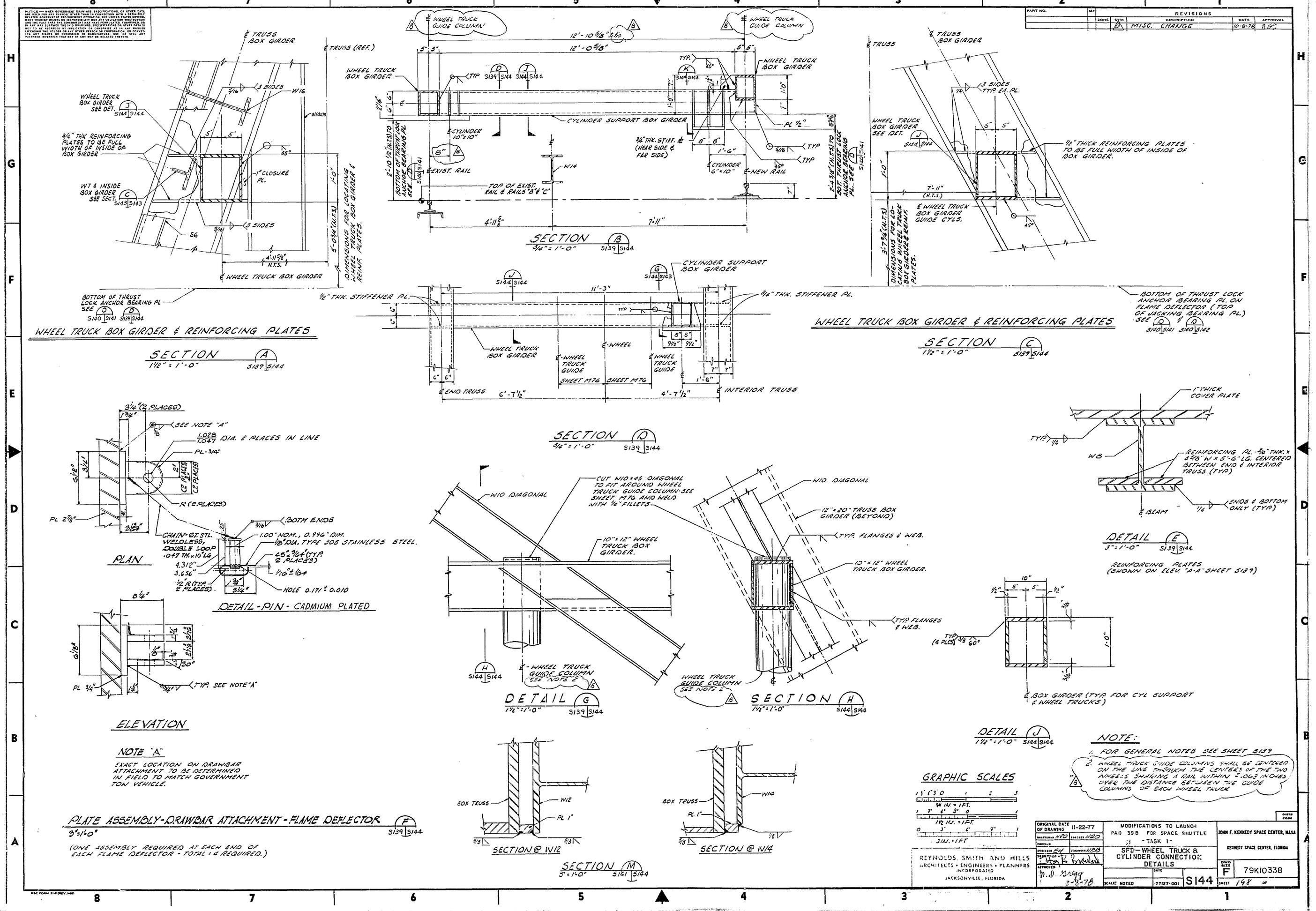

NOTICE — WHEN GOVERNMENT DRAWINGS, SPECIFICATIONS, OR OTHER DATA ARE USED FOR ANY PURPOSE OTHER THAN IN CONNECTION WITH A DEFINITELY RELATED GOVERNMENT PROCUREMENT OPERATION, THE UNITED STATES GOVERNMENT THEREBY INCURS NO RESPONSIBILITY NOR ANY OBLIGATION WHATSOEVER; AND THE FACT THAT THE GOVERNMENT MAY HAVE FORMULATED, FURNISHED, OR IN ANY WAY SUPPLIED THE SAID DRAWINGS, SPECIFICATIONS, OR OTHER DATA IS NOT TO BE REGARDED BY IMPLICATION OR OTHERWISE AS IN ANY MANNER LICENSING THE HOLDER OR ANY OTHER PERSON OR CORPORATION, OR CONVEYING ANY RIGHTS OR PERMISSION TO MANUFACTURE, USE, OR SELL ANY PATENTED INVENTION THAT MAY IN ANY WAY BE RELATED THERETO.

PART NO.	W?	REVISIONS				
		ZONE	SYM	DESCRIPTION	DATE	APPROVAL

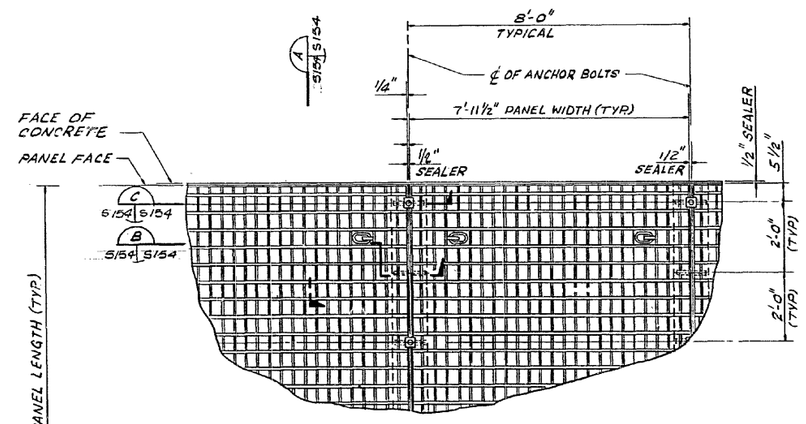

N — TOP CHORD PLAN
1/2" = 1'-0"

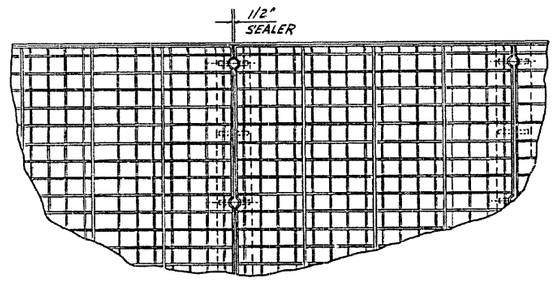

N — BOTTOM CHORD PLAN
1/2" = 1'-0"

NOTE:
INFORMATION AND SECTIONS SHOWN IN TOP CHORD PLAN TYPICAL FOR BOTTOM CHORD PLAN

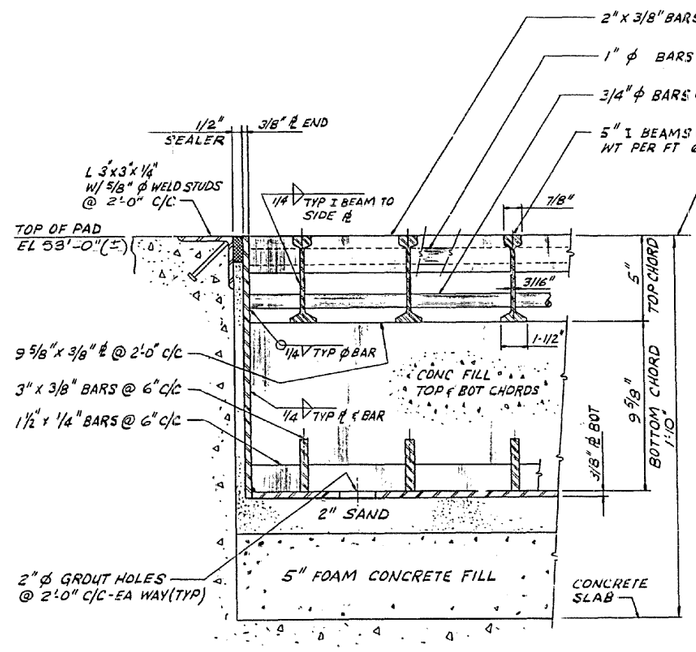

SECTION A
3" = 1'-0" S154 S154

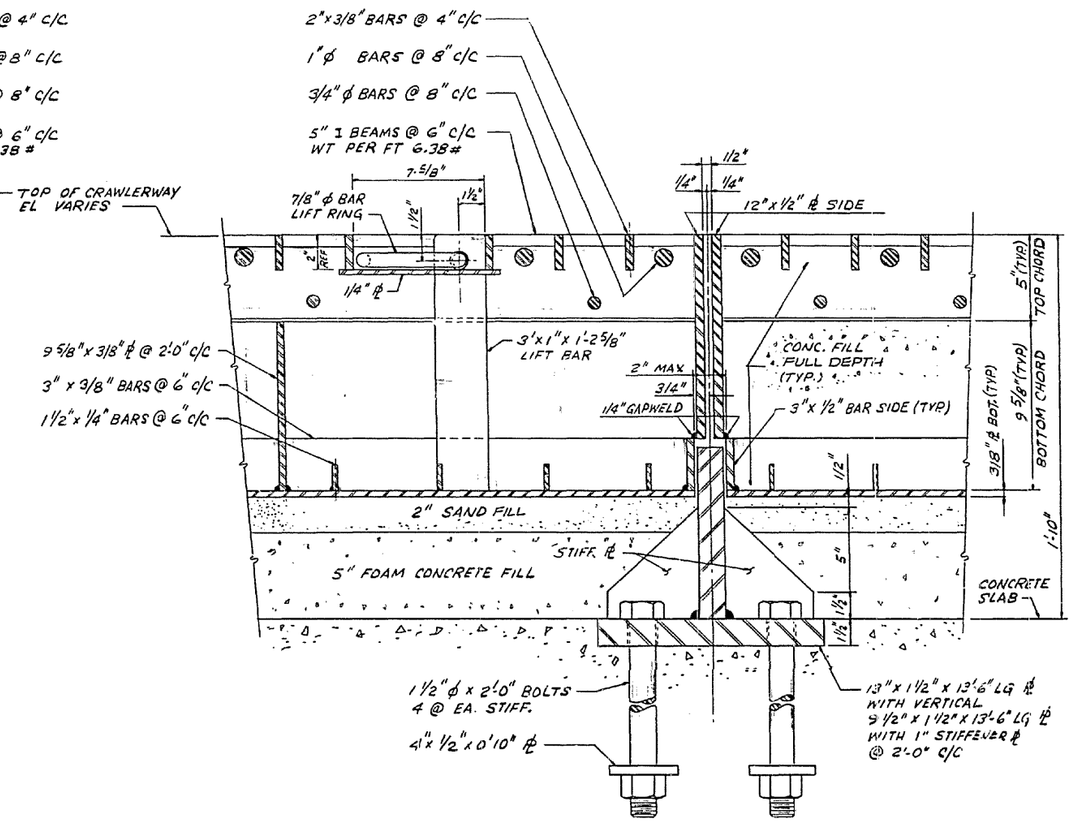

SECTION B
3" = 1'-0" S154 S154

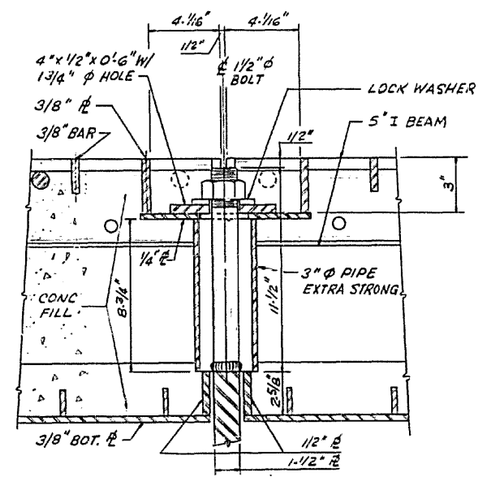

SECTION C
3" = 1'-0" S154 S154

NOTE:
FOR GENERAL NOTES, SEE SHT. S139

NOTE:
EXISTING CRAWLERWAY GRATING SHOWN ON THIS SHEET IS INCLUDED FOR REFERENCE AS AN INDICATION OF THE CONDITIONS TO BE ENCOUNTERED IN DRILLING FOR NEW BOLTS FOR BEARING PADS AND RAIL. GRATING IS NOT REMOVABLE.

GRAPHIC SCALES

REYNOLDS, SMITH AND HILLS
ARCHITECTS • ENGINEERS • PLANNERS
INCORPORATED
JACKSONVILLE, FLORIDA

ORIGINAL DATE OF DRAWING 11-22-77	MODIFICATIONS TO LAUNCH PAD 39B FOR SPACE SHUTTLE -TASK I-	JOHN F. KENNEDY SPACE CENTER, NASA KENNEDY SPACE CENTER, FLORIDA	
DRAFTSMAN MT / CHECKED HRO			
ENGINEER EN / ENGINEER FIELD	EXISTING CRAWLERWAY GRATING INSTALLATION	SIZE F	79K10338
APPROVED 3-8-78	SCALE NOTED / DATE 77127-001	S154	SHEET 108 OF

PRINT ½-SIZE

PART NO.	MF	REVISIONS			
	ZONE	SYM	DESCRIPTION	DATE	APPROVAL
		A	MISC. CHANGES	5-29-78	
		B	REVISED BOX PLATE STIFF. ARRT.	10-6-78	
	E6	A	RFI 308 INCORPORATED	8-14-80	

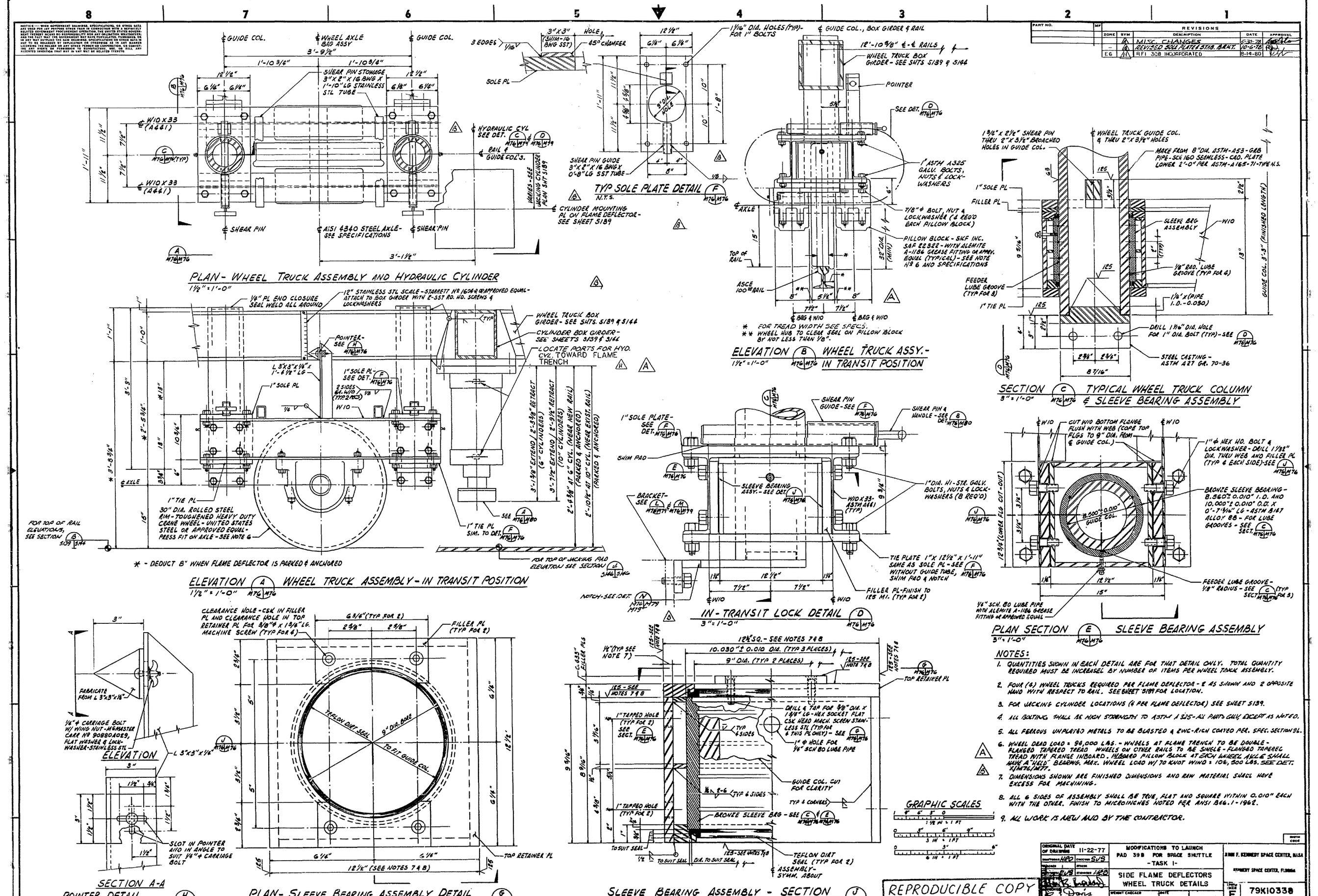

NOTES:

1. QUANTITIES SHOWN IN EACH DETAIL ARE FOR THAT DETAIL ONLY. TOTAL QUANTITY REQUIRED MUST BE INCREASED BY NUMBER OF ITEMS PER WHEEL TRUCK ASSEMBLY.
2. FOUR (4) WHEEL TRUCKS REQUIRED PER FLAME DEFLECTOR - 2 AS SHOWN AND 2 OPPOSITE HAND WITH RESPECT TO RAIL. SEE SHEET 5139 FOR LOCATION.
3. FOR JACKING CYLINDER LOCATIONS (4 PER FLAME DEFLECTOR) SEE SHEET 5139.
4. ALL BOLTING SHALL BE HIGH STRENGTH TO ASTM A325-ALL PARTS GALV. EXCEPT AS NOTED.
5. ALL FERROUS UNPLATED METALS TO BE BLASTED & ZINC-RICH COATED PER. SPEC. SECTION 9L.
6. WHEEL DEAD LOAD = 90,000 LBS. - WHEELS AT FLAME TRENCH TO BE DOUBLE-FLANGED TAPERED TREAD WHEELS ON OTHER RAILS TO BE SINGLE-FLANGED TAPERED TREAD WITH FLANGE INBOARD. HARDARD PILLOW BLOCK AT EACH WHEEL AXLE SHALL HAVE A FIELD BEARING. MAX. WHEEL LOAD W/ 70 KNOT WIND = 108,500 LBS. SEE DET. 77A79/77A77.
7. DIMENSIONS SHOWN ARE FINISHED DIMENSIONS AND RAW MATERIAL SHALL HAVE EXCESS FOR MACHINING.
8. ALL 6 SIDES OF ASSEMBLY SHALL BE TRUE, FLAT AND SQUARE WITHIN 0.010" EACH WITH THE OTHER. FINISH TO MICROINCHES NOTED PER ANSI B46.1-1962.
9. ALL WORK IS NEW AND BY THE CONTRACTOR.

ZONE	SYM	REVISIONS DESCRIPTION	DATE	APPROVAL
—	A	MISC. CHANGES	5-30-78	
—	B	REVISED COMPONENTS & TUBING	10-6-78	
—	E	REVISED, DENOTED CHANGES BY E	9-28-79	
C7,D3	H	RFI#260 INC	9-8-80	
	K	INC EO 7	1-15-98	

PART NO.

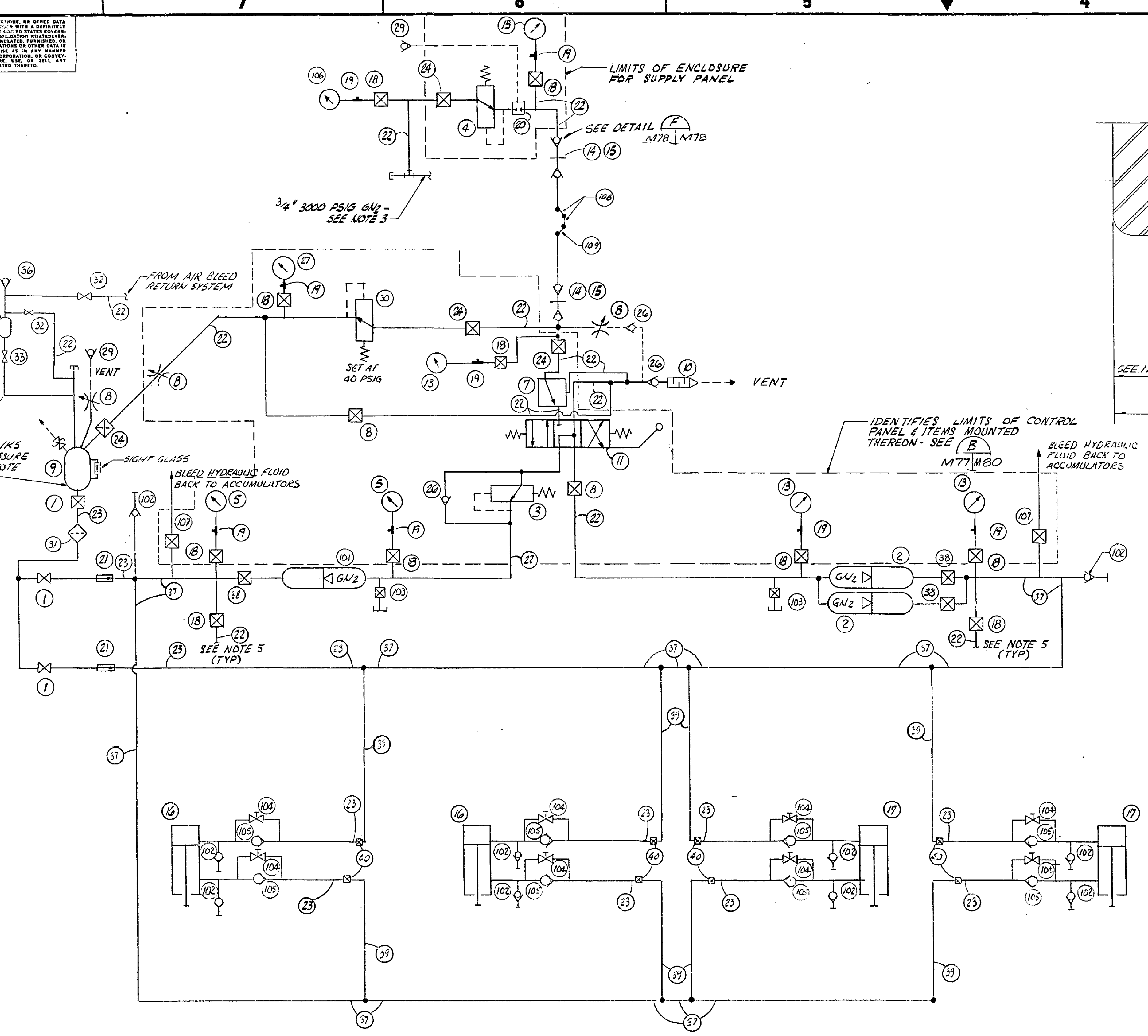

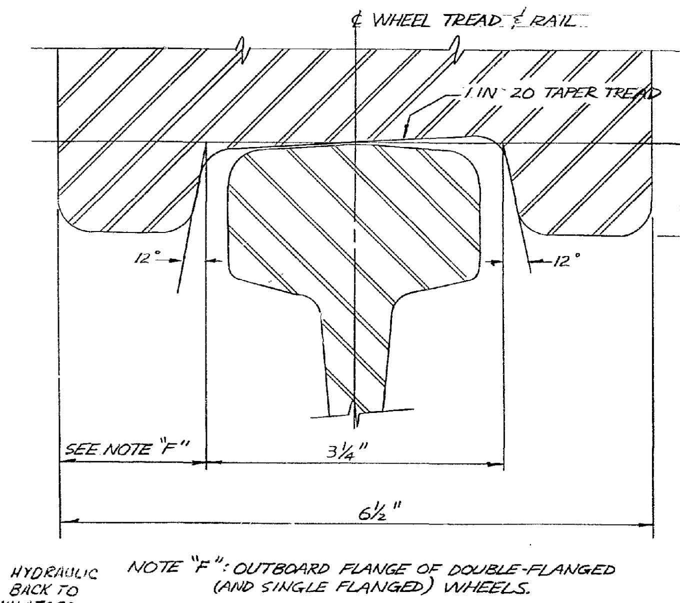

NOTE "F": OUTBOARD FLANGE OF DOUBLE-FLANGED (AND SINGLE FLANGED) WHEELS.

DETAIL X M76 M77 WHEEL & RAIL
FULL SIZE

NOTES:

1) ONE (1) CYCLE OF SYSTEM CONSISTS OF RAISING FLAME DEFLECTOR OFF BEARING PADS, TRANSPORT DEFLECTOR TO LAUNCH SITE, LOWER DEFLECTOR ONTO BEARING PADS AND RETRACT PISTONS.
2) SCHEMATIC AS SHOWN AND LISTING OF COMPONENT QUANTITY IS FOR ONE (1) SIDE FLAME DEFLECTER - TWO (2) PNEUMATIC HYDRAULIC SYSTEMS ARE REQUIRED.
3) TIE INTO 3/4" 3000 PSIG GASEOUS NITROGEN (GN_2) SUPPLY (SEE SHEET M69) AT BASE OF NORTH BRIDGE ON EACH SIDE OF PAD WITH 1/4" BRANCH TEE. RUN 1/4" TUBING AND CONNECT TO PANEL. FOR PANEL, SEE DETAIL F M78 M76, SECTIONS H M69 M69 & L M69 M69

4) JACKING SYSTEM OPERATION REQUIRES SYNCHRONOUS MOVEMENT OF ALL 4 CYLINDERS WITHIN 1/4" OF EACH OTHER, AT A SPEED OF NOT MORE THAN 4 INCHES PER MINUTE - SEE SPECIFICATIONS.
5) ALL HYDRAULIC LINES SHALL HAVE BLEED VALVES AT HIGH POINTS IN LINE. BLEED SHALL BE RETURNED TO TANK THRU 1/4" TUBING.
6) THE PNEUMATIC/HYDRAULIC SYSTEM SHALL BE OPERATED TO ACHIEVE MAXIMUM AIR REMOVAL AND ADJUST COMPONENTS FOR REQUIRED SERVICE PERFORMANCE.
7) THE PRINCIPAL COMPONENTS REQUIRED FOR THE JACKING SYSTEM ARE AS SHOWN ON THE SCHEMATIC - THE SYSTEM SHALL MEET THE REQUIREMENTS OF NOTE 4. ADDITIONAL COMPONENTS REQUIRED TO SATISFY JACKING REQUIREMENTS AND TO MAINTAIN A CLOSED HYDRAULIC SYSTEM SHALL BE PROVIDED BY THE CONTRACTOR.
8) MAX. CYLINDER LOADS - 10" BORE X 10" STROKE - 115,000 POUNDS (W/50 KNOT WIND) 6" BORE X 10" STROKE - 41,560 POUNDS
9) THE SIDE FLAME DEFLECTORS ARE TO BE USED IN AN AREA ON THE PAD SURFACE WHICH RESTRICTS THE USE OF ELECTRICAL/ELECTRONIC DEVICES OR EQUIPMENT DUE TO HAZARDOUS GASES. ADDITIONALLY, THE LEAKAGE OF FLUID AND GN_2 IN THE AREA CONSTITUTES A HAZARD AND ALL SUPPLY AND RETURN LINES, CONNECTIONS, ETC., SHALL BE VERIFIED LEAK TIGHT BY PRESSURE TEST @ 4500 PSIG.
10. PROVIDE TUBING SUPPORTS AT NOT MORE THAN 4'-0" O.C. ALONG RUNS OF TUBING & WITHIN 8" OF ENDS OF TUBING RUNS FOR TYP. TUBING SUPPORTS SEE F M79 M79
11. FOR PRESSURES, SEE JACKING CONTROL PANEL SCHEMATIC ON SHT. M80
12. FABRICATION AND INSTALLATION OF FLANGED TUBE ASSEMBLIES AND INSTALLATION OF FITTINGS AND FITTING ASSEMBLIES SHALL CONFORM TO KSC-SPEC-Z-0008A, AMENDMENT No. 4. TUBING SHALL CONFORM TO KSC-SPEC-Z-0007, AND FITTINGS SHALL CONFORM TO KSC-GP-425 ENGINEERING STANDARDS. ABOVE DATA AVAILABLE AS OUTLINED IN "INSTRUCTIONS TO BIDDERS." ALL STANDARD TYPE TUBING FITTINGS SHALL BE KC STD. TYPE FURNISHED BY THE GOV'T - SEE CONTRACT SCHEDULE - SECTION X - ARTICLE 1. SST TUBING WILL BE GFE.
13. HYDRAULIC FITTING THREADS MAY BE LUBRICATED BY APPLICATION OF CLEAN HYDRAULIC FLUID PRIOR TO ASSEMBLY.
14. TUBING SHOWN SCHEMATICALLY, LOCATION OF BENDS & FINISHED LENGTHS SHALL BE DETERMINED BY THE CONTRACTOR.
15. FOR MARKING AND IDENTIFICATION OF COMPONENTS & SYSTEM - SEE SPECIFICATION SECTION 4R.
16. HYDROSTATIC PRESSURE TESTING SHALL BE PERFORMED ON ALL TUBING ASSEMBLIES (PER KSC-SPEC-Z-0008A) PRIOR TO INSTALLATION IN THE HYDRAULIC SYSTEM, ALL RESIDUE OF THE HYDROSTATIC TEST MEDIA SHALL BE REMOVED FROM TUBE ASSEMBLIES BEFORE SUCH INSTALLATION.
17. ALL WORK IS NEW AND BY THE CONTRACTOR EXCEPT WHERE OTHERWISE NOTED.
18. PNEUMATIC FITTING THREADS MAY BE LUBRICATED PER KSC-SPEC-Z-0009.

ITEM NO	DESCRIPTION	SIZE	MANUFACTURER AND PART NO	QTY
101	ACCUMULATOR	10 GAL.	ROBERT BOSCH P/N (EAST & WEST) 0531-115-630 (3000 PSI MAX)	1-EA SIDE
102	QUICK CONNECT SOCKET BODY HALF	3/16"	PERFECTING, DIV., DUFF NORTON CO. P/N 3117M3.	10
103	VALVE, NEEDLE	1/4"	DRAGON VALVES, INC. P/N 817054KT	2
104	NEEDLE VALVE	3/8"	DRAGON VALVES INC P/N 10MOSGT	8
105	CHECK VALVE	3/8"	CIRCLE SEAL, P/N 24977-6TT	8
106	GAUGE, PRESSURE	2" DIAL 0-6000	GLASSCO INST. CO. P/N G-3397-6000	1
107	NEEDLE VALVE	—	DRAGON P/N 10F0S3T	2
108	HOSE, STEEL, BRAIDED	1/4", 50'	RESISTOFLEX CORP. P/N 0002AE-4-6000 (KSC P/N 7115020-2-6000-12E)	2
109	HOSE, STEEL, BRAIDED	1/4", 25'	RESISTOFLEX CORP. P/N 0002AE-4-3000 (KSC P/N 7115020-2-3000)	1
110	KELLUM GRIP	-	HUBBELL CORP. P/N 022-16-001	4
111	KELLUM GRIP	-	HUBBELL CORP. P/N 022-16-016	2

ITEM NO.	DESCRIPTION	SIZE	MANUFACTURER AND PART NUMBER	QTY.
1	VALVE, MANUAL SHUT-OFF	3/8"	HOKE, P/N-7115G6S (5000 PSIG W/KEL-F SEATS)	3
2	ACCUMULATOR	10 GAL	ROBERT BOSCH P/N: EAST-0531-115-630 (3000 PSI) WEST-0531-015-712 (4800 PSI)	2 / 2
3	VALVE, PRESSURE REGULATOR	—	APCO, P/N-1341-6 (0-600 PSIG)	1
4	VALVE, PRESSURE REGULATOR	—	APCO, P/N-1342-4 (0-3000 PSIG)	1
5	GAUGE, PRESSURE	2" DIAL 0-500 PSIG	GLASSCO INST. Co., P/N-G-3397-500	2
6	HOSE, RUBBER (REINF)	1/4" X 15 FT.	AEROQUIP, P/N-1529-4 FOR 5000 PSIG GN_2	1
7	RELIEF VALVE, HIGH PRESSURE	-	REPUBLIC, P/N-649XB-10-4-2 2100 PSIG	1
8	NEEDLE VALVE	-	DRAGON VALVES, INC P/N-3354T	5
9	FILL TANK W/RELIEF VALVE	15 GAL.	HASKEL, P/N 28350-4, W/REPUBLIC RELIEF VALVE P/N-649XB-4-8-2. W/HASKEL P/N 51162 SIGHT GLASS	1
10	MUFFLER	3/4"	C.W. MORRIS, WA-6	1
11	4 WAY 3 POSITION MANUAL VALVE	-	REPUBLIC, P/N-2817ZE-1/4A-S 2 (GN_2)	1
12	DELETED			
13	GAUGE, PRESSURE	2" DIAL 0-3000 PSIG	GLASSCO INST. Co., P/N-G-3397-3000	4
14	QUICK DISCONNECT, FEMALE	1/4"	SNAPTITE, P/N-4878-6SS W/MS33656-4END FITTING	2
15	QUICK DISCONNECT, MALE	1/4"	SNAPTITE, P/N-4878-7SS-W/MS33656-4 END FITTING	2
-	HYDRAULIC FLUID	—	MIL-H-6083 (G.F.E.)	A.R.
-	BLEED VALVES	1/4"	DRAGON VALVES, INC P/N:0F0S3T-SEE NOTE 5	A.R.

A.R. = AS REQUIRED

ITEM NO.	DESCRIPTION	SIZE	MANUFACTURER AND PART NUMBER	QTY.
16	HYDRAULIC CYLINDER	10"x10"	MILLER, HGGB W/MODIFIED ROD END	2
17	HYDRAULIC CYLINDER	10"x6"	MILLER, HGGB W/OVERSIZE ROD & MOD. END	2
18	VALVE, MANUAL SHUTOFF	1/4"	APCO, P/N-SOG3 CK-045	10
19	GAUGE PROTECTOR	1/4"	REPUBLIC, P/N-GOII-1/4 SS	8
20	3 WAY VALVE - CROSSOVER	1/4"	HIGH PRESS. EQUIP. Co., P/N 10-11 AF4	1
21	CHECK VALVE	3/8"	REPUBLIC, P/N-428-GY2-6 or 429-GY2-6	2
22	TUBING - 1/4" x 0.035 WALL	O.D.	TYPE 316 - SEE NOTE 12	A.R
23	TUBING - 3/8" x 0.058 WALL	O.D.	TYPE 316 - SEE NOTE 12	A.R
24	BALL VALVE, SHUTOFF	1/4"	FLODYNE CONTROLS, P/N 2A11	4
25	DELETED			
26	CHECK VALVE	1/4"	REPUBLIC, P/N-428-4Y2-6 or 429-4Y2-6	3
27	PRESSURE GAUGE	2" DIAL 0-50 PSIG	GLASSCO INST, Co P/N G-3397-50	1
—	FITTINGS-TUBING	A.R.	TYPE 316 - SEE NOTE 12	A.R.
28	DELETED			
29	CHECK VALVE - VENT	1/4"	MAROTTA SCI. CONT. P/N 232783-4A6	2
30	VALVE, PRESSURE REGULATOR	-	APCO, P/N 1341-1 (0-75 PSIG)	1
31	FILTER, HYDRAULIC FLUID	-	HOKE, P/N 60302-4 (20-30 MICRON)	1

ITEM NO	DESCRIPTION	SIZE	MANUFACTURER AND PART NUMBER	QTY.
32	VALVE, MANUAL SHUT OFF	1/4"	HOKE, P/N 7115G4S	2
33	VALVE MANUAL SHUT OFF	3/8"	HOKE, P/N 7222 F6 S	1
34	BLEED RECEIVER TANK	-	SEE DETAIL G SHEET M78	1
35	SIGHT GLASS	-	McMASTER-CARR CAT. No. 3703K2	1
36	CHECK VALVE, VENT	1/2"	MAROTTA SCI. CONT. P/N 232783-8A6	1
37	TUBING - 3/4" x .065" WALL	O.D.	TYPE 316 - SEE NOTE 12	A.R.
38	VALVE, MANUAL SHUT-OFF	3/4"	DRAGON VALVES, INC. P/N 10FO-S-11-T	3
39	TUBING - 1/2" x .049" WALL	O.D.	TYPE 316 - SEE 12	A.R
40	VALVE MANUAL SHUTOFF	1/2"	HOKE P/N 7223F8Y (W/TEFLON SEAT)	8

SCHEMATIC - SIDE FLAME DEFLECTOR JACKING - PNEUMATIC / HYDRAULIC SYSTEM - 2 REQ'D.

NOTICE.—WHEN GOVERNMENT DRAWINGS, SPECIFICATIONS, OR OTHER DATA ARE USED FOR ANY PURPOSE OTHER THAN IN CONNECTION WITH A DEFINITELY RELATED GOVERNMENT PROCUREMENT OPERATION, THE UNITED STATES GOVERNMENT THEREBY INCURS NO RESPONSIBILITY NOR ANY OBLIGATION WHATSOEVER; AND THE FACT THAT THE GOVERNMENT MAY HAVE FORMULATED, FURNISHED, OR IN ANY WAY SUPPLIED THE SAID DRAWINGS, SPECIFICATIONS OR OTHER DATA IS NOT TO BE REGARDED BY IMPLICATION OR OTHERWISE AS IN ANY MANNER LICENSING THE HOLDER OR ANY OTHER PERSON OR CORPORATION, OR CONVEYING ANY RIGHTS OR PERMISSION TO MANUFACTURE, USE, OR SELL ANY PATENTED INVENTION THAT MAY IN ANY WAY BE RELATED THERETO.

REYNOLDS, SMITH AND HILLS
ARCHITECTS • ENGINEERS • PLANNERS
INCORPORATED
JACKSONVILLE, FLORIDA

ORIGINAL DATE OF DRAWING 11-22-77
DRAFTSMAN RPS CHECKER SJS
ENGINEER SJS ENGINEER MEB

MODIFICATIONS TO LAUNCH PAD 39B FOR SPACE SHUTTLE -TASK I-

SIDE FLAME DEFLECTORS JACKING SCHEMATIC

JOHN F. KENNEDY SPACE CENTER, NASA
KENNEDY SPACE CENTER, FLORIDA

DWG SIZE F 79K10338
SCALE: NOTED 77127-001 M 77
SHEET 305