Government Minimum Specifications
Convoluted Metal Flexible Hose Assemblies
8/26/14

BACKGROUND.

Hose assemblies are required that meet this Government Minimum Specification and are to consist of an annular corrugated metal pressure carrier with external braided wire reinforcement and end fittings. The nominal hose assembly inner diameters range from ¼ inch to 1-1/2 inches. Specifications of the items are as described below.

All applicable codes are listed in Appendix A.

SPECIFICATIONS.

Performance Characteristics.

The capabilities of the hose assemblies supplied under this document shall equal or exceed the requirements in the subsequent paragraphs.

Service. The hose assembly shall be compatible with liquid R134a.

Operating Pressure. The hose assemblies' maximum allowable working pressure (MAWP) shall not be less than that specified in Table 1.

Proof Pressure. The hose assembly shall withstand initial proof testing without visual evidence of permanent deformation of either the fluid carrier or braided reinforcement.

Leakage. - Leakage of hose assemblies shall not exceed 1 X 10-7 standard cubic centimeters per second of helium (SCC/S GHe) using a Helium Mass Spectrometer Leak Detector (HMSLD).

Operating Temperature. The hose assemblies shall be capable of continuous operation over a temperature range of - 65° Fahrenheit (F) to + 200° F. without degradation or failure due to temperature extremes.

Flow. The hose assembly shall be capable of withstanding, without any damage to the assembly, a minimum flow velocity of 75 ft. / sec. for liquids.

Physical Characteristics.

Length. The hose assembly shall be furnished in lengths as specified by the description of each item within each line item. The hose length shall be measured as shown in Figure 1 and Figure 2 which depicts two different configurations of hoses that shall be measured. The hose assembly shall not consist of spliced or separate sections of hose assemblies that are joined/welded together.

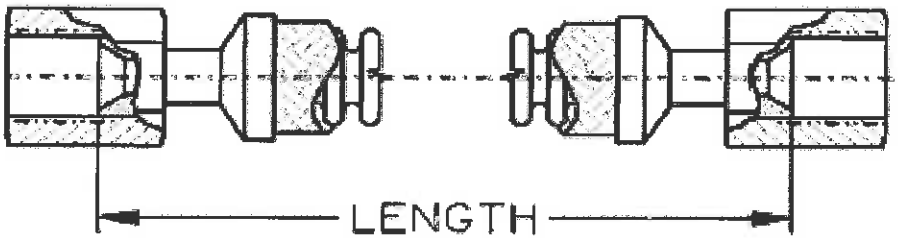

Figure 1: Picture of a Male to Male hose configuration

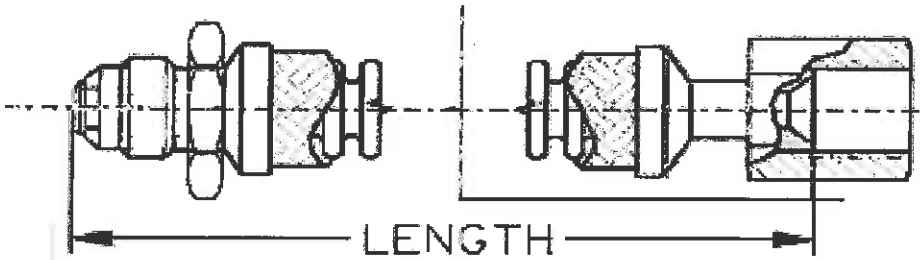

Figure 2: Picture of a Male to Female hose configuration

Tolerance on Hose Length. Tolerance on hoses 18 to 36 inches long shall be +/-1/4 inch. Tolerance on hoses over 50 inches long shall be +/-1 percent.

Bend Radius. The hose assembly shall be capable of repeated flexure, while pressurized, to the minimum bend radius specified in Table 1 over its useful life.

End Connections. End connections hose assembly shall be 37 degree flared tube fittings. Reference KSC-GP-425, Fluid Fitting Engineering Standards (Reference Appendix A).

Female Flared Tube End Connections. The hose assembly ending in female fittings shall mate with the 37 degree flared fitting as specified by AS1098 (Figure 7).

Flare and Sleeve. The required Flare and Sleeve shall be a one piece machined flare and sleeve assembly, similar in design to the KC145 (Figure 3 and reference details in KSC-GP-425 Fluid Fitting Engineering Standards in Appendix A), butt welded to the convoluted tube; or if the KC145 is not available, a three piece (tube end, sleeve, and coupling nut) assembly. The sleeve shall conform to AS4327 (Figure 4).

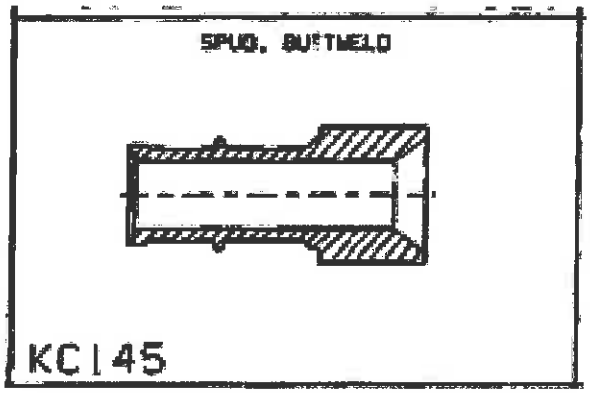

Figure 3: Picture of KC145 Fitting

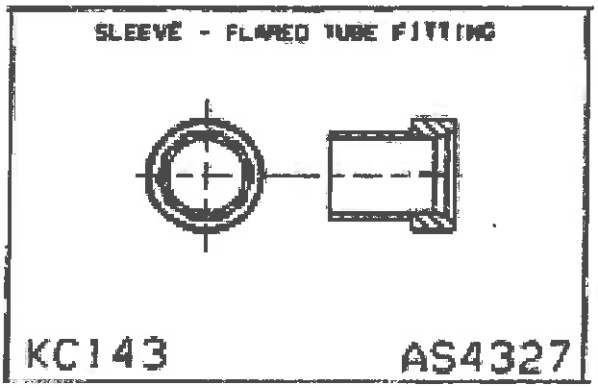

Figure 4: Picture of AS4327 Fitting

Coupling Nut. The coupling nuts shall conform to AS4326 (Figure 5).

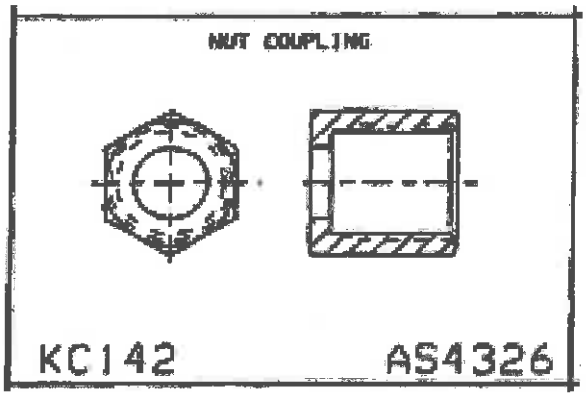

Figure 5: Picture of AS4326 Fitting

Male Flared Tube End Connections. The hose assembly ending in male fittings shall comply with the 37 degree flared fitting as specified by AAB1035 (Figure 6 and reference details in AAB1035 in Appendix A), or AS1098 (Figure 7). Fitting shall include a groove for seal ring. AS1098 shall be used as an alternate choice for male end fittings if AAB1035 is unobtainable.

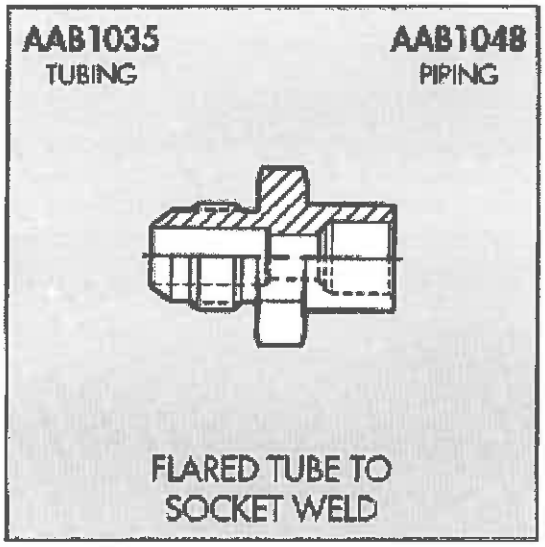

INTENDED USE:

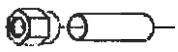

THE WELD FITTINGS IN THIS SECTION ARE INTENDED TO BE SOCKET WELDED ON THE END OF PIPING OR TUBING.

Figure 6: Picture of (Alan Aircraft) AAB1035

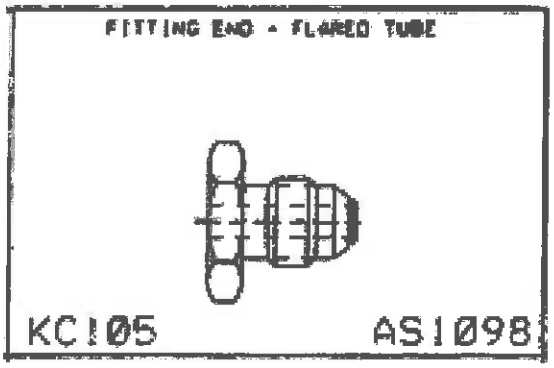

Figure 7: Picture of AS1098

Design.

Burst Pressure. The hose assembly shall be designed to withstand a pressure of at least four (4) times its MAWP (Reference Table 1) without bursting. If the manufacturer's standard safety factor is less than four (4), the hose assemblies MAWP shall be de-rated to provide a safety factor of four (4).

Reinforcement. The exterior hose reinforcement or protective cover shall consist of braided plies of stainless steel wires. Reinforcement separation materials, that are used for the exterior hose only, shall permit gas effusion to escape from the hose to atmosphere. There shall be no broken or spliced reinforcing wire that is used for reinforcement of the exterior hose.

Materials, Parts, and Fabrication.

Materials. The corrugated hose section shall be made from AISI Type 316L or 321 stainless steel. The exterior braid shall be made of AISI Type 316/316L stainless steel wire. AISI Type 304L/316L stainless steel shall be used for any welded parts except the corrugated hose section. Stainless steel sheet or strip, AISI Type 304/304L, 316/316L, and 321, shall conform to the requirements of ASTM A 240 or ASTM A 276. Pipe and tubing shall be seamless, AISI Type 304/304L, 316/316L or 321 conforming to ASTM A 312 (pipe) or ASTM A 269 (tube). Stainless steel wire shall conform to ASTM A 580. ANSI/ASME B31.3, temperature limitations as referenced in Chapter III shall apply to the supplied materials, as mentioned in this section above. Castings of metallic components are not permitted.

Flared Tube End Fittings. Flared Tube End Fittings shall be AISI Type 316L conforming to ASTM A 276.

Parts. Standard or commercial parts and components shall be used to the maximum extent possible provided that the hardware conforms, at the minimum, to the specification as to materials in the above section Materials.

Fabrication. Fabrication of hose assemblies shall be in accordance with ASME boiler and pressure vessel code sections VIII and IX, and ANSI/ASME B31.3. Stainless Steel welding of the hose assemblies shall be performed in accordance with AWS 17.1, Clause 9, Paragraph 9.1, Option 2 and AWS D1.6. Inspections shall be performed per 9.2.4.4, (4),(a) for Normal Fluid Service as determined by ANSI/ASME B31.3 and required copies of Welding Test Reports shall be per AWS 17.1, Clause 5, Figure 5.1 - Suggested Test Report Form. Offeror shall provide responses to all, as applicable, in the above mentioned Suggested Test Report Form. Documentation as to copies of Welding Test Reports shall be submitted as per the below section **DOCUMENTATION.**

Longitudinal Seam Weld. Non-Destructive Testing of the hose assemblies shall not be required for the longitudinal seam of the convoluted tube, provided the seam weld is performed with an automatic weld process without the addition of filler material. Non-Destructive Testing of the hose assemblies shall be required IF the seam weld is not performed with an automatic weld process with the addition of filler material. Reference below section *Tests* as to Proof Pressure Test.

Fillet Welds. Any fillet welds of the hose assemblies subject to effects of the service medium pressure shall be examined along its full length. Examination shall be by liquid penetrant method. No cracks or porosity open to the surface of the hose assemblies shall be permitted. Fillet weld size shall match that of the thinnest material to be welded.

Welds Not Subject to Media Pressure. Welds not subject to the effect of the service media pressure shall be visually inspected. No cracks or porosity open to the surface of the hose assembly are permitted.

Tests

Offeror shall perform the below tests on each hose assembly. Results of the tests shall be in accordance with the above section **SPECIFICATIONS.**

Proof Pressure Test. – As specified in ANSI/ASME B31.3 Process Piping, place the hose assembly in a hydrostatic test setup. Apply and maintain the proof pressure of one and one half (1 ½) times its MAWP for five (5) minutes using clean demineralized water at 66° to 74° F. No visual evidence of permanent deformation or of leakage of either the fluid carrier or braided reinforcement of the hose assembly is allowed. Offeror shall record date of Proof Pressure Test on the hose assemblies steel tag or steel band as to below section on *Product Marking*.

Leak Test. – The following Leak Test shall be performed after completion of the Proof Pressure Test. The hose assembly shall be thoroughly purged and dried prior to initiating the Leak Test. The Leak Test shall be performed using a HMSLD. Calibrate for a sensitivity of 1 X 10-9 SCC/S GHe. Leakage shall not exceed 1 X 10-7 SSC/S GHe using either of the below listed Leak Detection Techniques. Offeror shall not be required to record date of Leak Test on the hose assemblies steel tag or steel band as to below section on *Product Marking*.

Leak Detection Techniques:

1. Pressurized Hose Assembly
   The hose assembly shall be thoroughly purged using GHe to remove all traces of air then pressurized with GHe to its MAWP. The HMSLD shall be moved methodically about the hose to detect leakage.

2. Evacuated Hose Assembly
   The hose assembly shall be connected to the HMSLD and evacuated to less than ten (10) microns Mercury (Hg). GHe shall be sprayed over the outer surface of the hose. If an auxiliary vacuum pump is used to assist in evacuation of the hose, its use must be discontinued prior to performing any leakage measurement.

Cleaning. Offeror shall provide hose assemblies that are free of grease, dirt, cleaning solutions, or debris. **FOR REFERENCE ONLY:** All "final" Cleaning and Passivation of hose assemblies will be performed by **NASA** as per NASA, KSC Standards. Offeror shall not be required to perform any "final" Cleaning and Passivation of hose assemblies other than what is stated above as to items being free of grease, dirt, cleaning solutions, or debris.

Product Marking. Offeror shall tag each hose assembly with a permanently attached corrosion resistant steel tag or steel band. Steel tag to be attached to items with stainless steel wire meeting the specification as stated in the above section on Materials. Steel Tags or steel bands required to have the following information:

A. Manufacturer's Name
B. Manufacturer's Part Number
C. Fabrication Date (Month and Year)
D. Proof Pressure Test Date (Month and Year)
   Note: Leak Test Date not required.
E. Rated Working Pressure (Reference MAWP in Table 1)
F. Serial Number, if applicable

Warranty. All hose assemblies shall have a standard commercial warranty.

NASA QUALITY CODE.

Items are coded with NASA Quality Code Q2 - FAR 52.246-15 Certificate of Conformance.

DOCUMENTATION.

Offeror shall submit the following documents upon delivery of items. Documents shall identify each individual item, as applicable.

A. FAR 52.246-15 Certificate of Conformance (as required in above section **NASA QUALITY CODE.**).

B. Certified Test Reports for Proof Pressure Test and Leak Test as per above section *Tests*.

C. Certification of content of materials of delivered hose assemblies, as per above section Materials. This is a copy of the document from the manufacturer of the actual raw materials.

D. Welding Test Reports as required by AWS 17.1, Clause 5, Figure 5.1 - Suggested Test Report Form as per above section Fabrication. (Also reference Appendix A, welding specifications and ANSI/ASME B31.3). Offeror shall provide responses to all, as applicable, in the above mentioned Suggested Test Report Form.

TABLE 1

CONVOLUTED METAL FLEXIBLE HOSE ASSEMBLIES SPECIFICATIONS*

DESCRIPTION	NOMINAL ID (Inches)	MAXIMUM ALLOWABLE WORKING PRESSURE (MAWP) (PSIG)	MINIMUM BEND RADIUS (Inches)
1-1/2" Inner Diameter X 12'-11" long	1-1/2"	860	11-3/4"
1-1/2" Inner Diameter X 6'-1" long	1-1/2"	860	11-3/4"
1-1/2" Inner Diameter X 12'-11" long	1-1/2"	860	11-3/4"
1" Inner Diameter X 5'-5" long	1"	715	9-1/4"
1" Diameter X 5'-0" long	1"	715	9-1/4"
½" Inner Diameter X 3'-5" long	½"	1195	7"
½" Inner Diameter X 3'-5" long	½"	1195	7"
¼" Inner Diameter X 3'-6" long	¼"	2000	4-3/4"

***NOTE: MAWPs and Minimum Bend Radius' apply to both configurations of hose assemblies regardless of type of end fittings.**

APPENDIX A

GOVERNMENT.

SPECIFICATIONS

John F. Kennedy Space Center (KSC), NASA

KSC-C-123J	Surface Cleanliness of Fluid Systems
KSC-GP-425 Rev G. Amend 3	Fluid Fitting Engineering Standards

(Copies of specifications, standards, drawing, and publications can be obtained at this website: https://standards.nasa.gov/documents/ksc)

NONGOVERNMENTAL.

American National Standards Institute (ANSI)

ANSI/ASME B16.5	Pipe Flanges and Flanged Fittings
ANSI/ASME B31.3	Process Piping

American Society for Testing and Materials (ASTM)

ASTM A 182	Forged or Rolled Alloy-Steel Pipe Flanges, Forged Fittings, And Valves and Parts for High-Temperature Service, Standard Specification for
ASTM A 240	Heat-Resisting Chromium and Chromium-Nickel Stainless Steel Plate, Sheet, and Strip for Pressure Vessels
ASTM A 269	Seamless and Welded Austenitic Stainless Steel Tubing for General Service, Standard Specification for
ASTM A 276	Stainless Steel Bars and Shapes, Standard Specification for
ASTM A 312	Seamless and Welded Austenitic Stainless Steel Pipes, Standard Specification for
ASTM A 380	Cleaning and Descaling Stainless Steel Parts, Equipment, and Systems, Standard Practice for
ASTM A 403	Wrought Austenitic Stainless Steel Piping Fittings, Standard Specification for
ASTM A 580	Standard Specification for Stainless Steel Wire
ASTM A 967	Standard Specification for Stainless Steel Wire Chemical Passivation Treatments for Stainless Steel Parts, Standard Specification for

American Society of Mechanical Engineers (ASME)

ASME	Boiler and Pressure Vessel Code, Section VIII Pressure Vessels, Division 1 (Unfired)

American Welding Society (AWS)

AWS 17.1	Specification for Fusion Welding for Aerospace Applications - 2nd Edition
AWS D1.6	Structural Welding Code— Stainless Steel

Manufacturers Standardization Society (MSS)

MSS-SP-6	Standard Finishes for Contact Faces of Pipe Flanges and Connecting- End Flanges of Valves and Fittings

Society of Automotive Engineers (SAE)

AS1098	Fitting End, Flared Tube For Seal Ring, Standard Dimensions For, Design Standard
AS4326	Fitting End, Flared Tube, For Seal Ring, Standard Dimensions For, Design Standard Nut, Coupling
AS4327	Sleeve, Flared Tube Fitting

Alan Aircraft (AA)

AAB1035	Fitting End, Flared Tube to Socket Weld