NNC14516973Q

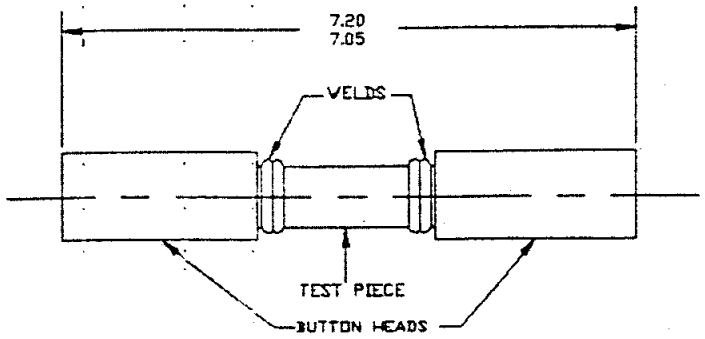

INERTIA WELDED BAR

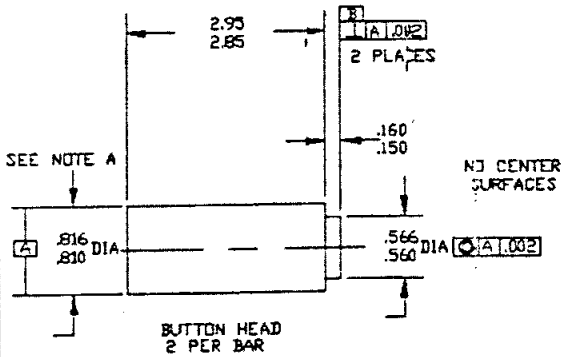

BUTTON HEAD
2 PER BAR

MATERIAL: INCO 718

HEAT TREAT BUTTON HEAD AFTER MACHINING AS REQ'D
REMOVE SCALE FROM SURFACE

NO CENTER HOLES ALLOWED ON SURFACES B, D, E

FINISH 125

MACHINED PIECES

BREAK SHARP EDGES .03 MAX R

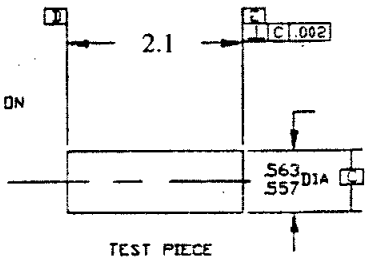

TEST PIECE
MATERIAL: AS SUPPLIED

NOTES:
A. .750/.752 DIA. BUTTON HEAD IS ALSO ACCEPTABLE

INERTIA WELDING

FILE NAME INERTIAC | 11/5/96
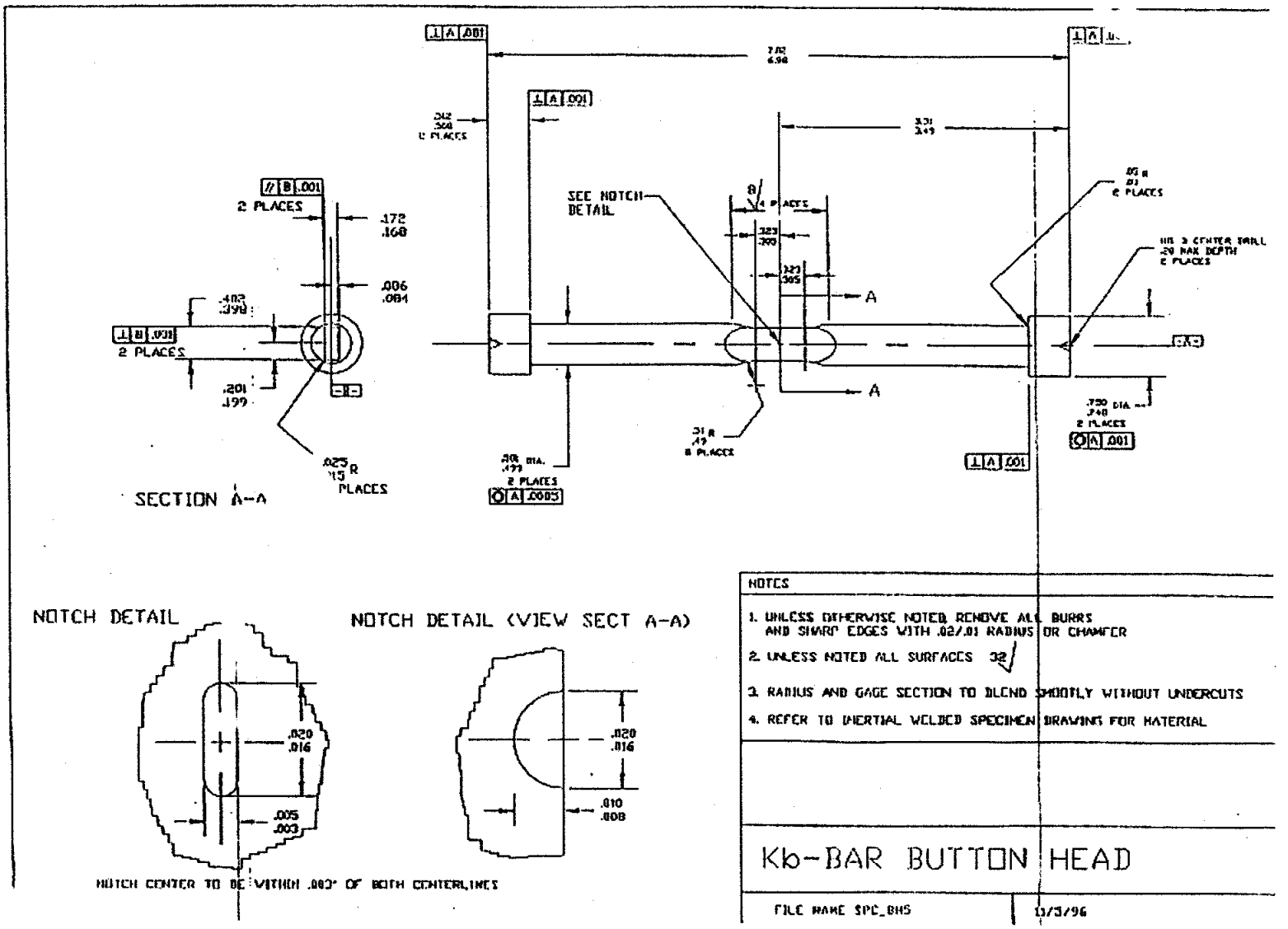
NNC14516973Q