COMMERCIAL PARTS LIST

BALLOON NO	DESCRIPTION	QTY/ ASSY
1	THREADED INSERT, HELICAL COIL .38 LONG, PER MS124735. (FOR .190-32 FASTENER.)	12 (3)

1. MATERIAL: 6061-T6 ALUMINUM.
2. CERTIFIED MATERIAL TEST REPORT WITH A TRACEABLE LOT NUMBER MUST BE PROVIDED.
3. (3) CERTIFICATE OF CONFORMANCE REQUIRED FOR ALL PARTS.
4. THIS DRAWING SHALL BE USED WITH MODEL "140403MFA101_WINDOW_FRAME.stp" FOR COMPLETE PRODUCT DEFINITION.
5. 125 Ra ALL MACHINED SURFACES, UNLESS OTHERWISE NOTED.
6. (6) INSTALL COMMERCIAL PARTS "C1" AFTER SURFACE TREATMENT AND PRIMER.
7. SURFACE TREATMENT: CHEMICAL CONVERSION COATING PER MIL-DTL-5541F WITH MATERIAL MEETING MIL-DTL-81706B, CLASS 1A.
8. (8) MASK INDICATED SURFACES AND PRIMER PAINT PER MIL-PRF-23377K.
9. VISUALLY INSPECT PART FOR DEFECTS.
10. (10) IDENTIFY WITH PART DRAWING NUMBER PLUS A SERIALIZED DASH NUMBER PROVIDED BY CONFIGURATION CONTROL, PER S3 VRP-02. EXAMPLE: (140403MFA101-01). USE RUBBER STAMP AND BLACK INK WITH 1/8" to 1/4" HIGH CHARACTERS, PER MIL-STD-130. LOCATE ON SPECIFIED SURFACE APPROXIMATELY AS SHOWN (ZONE C3).

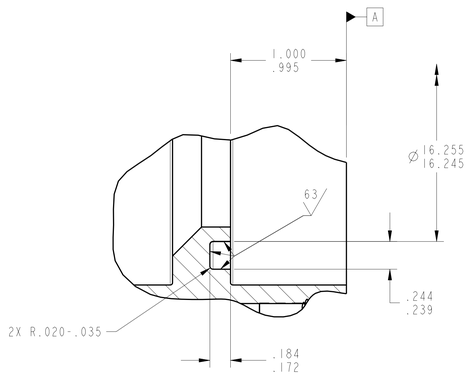

DETAIL B
SCALE 2/1

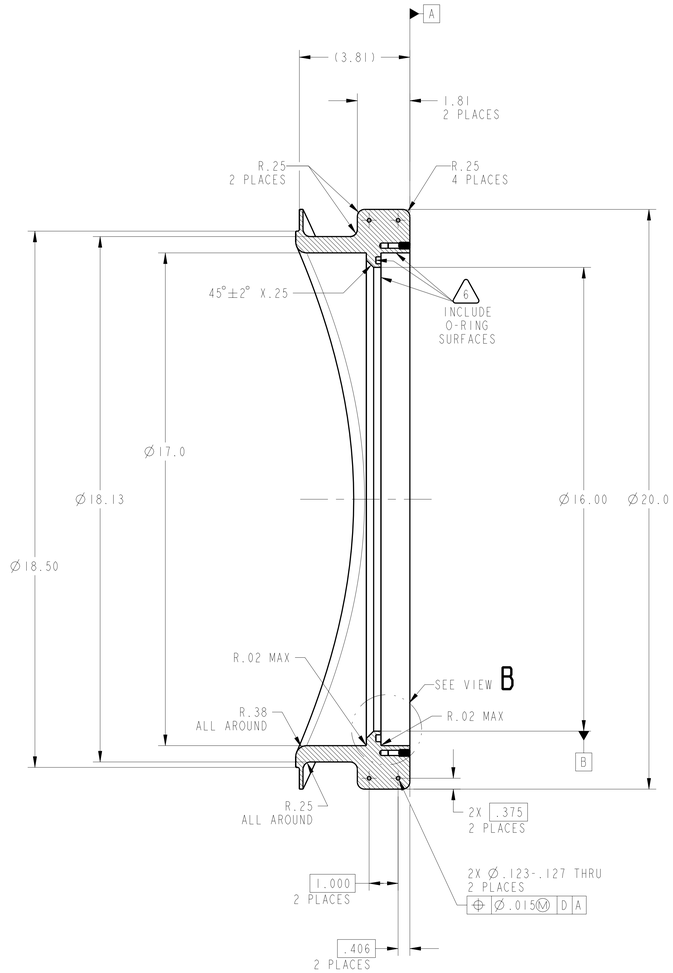

SECTION A-A

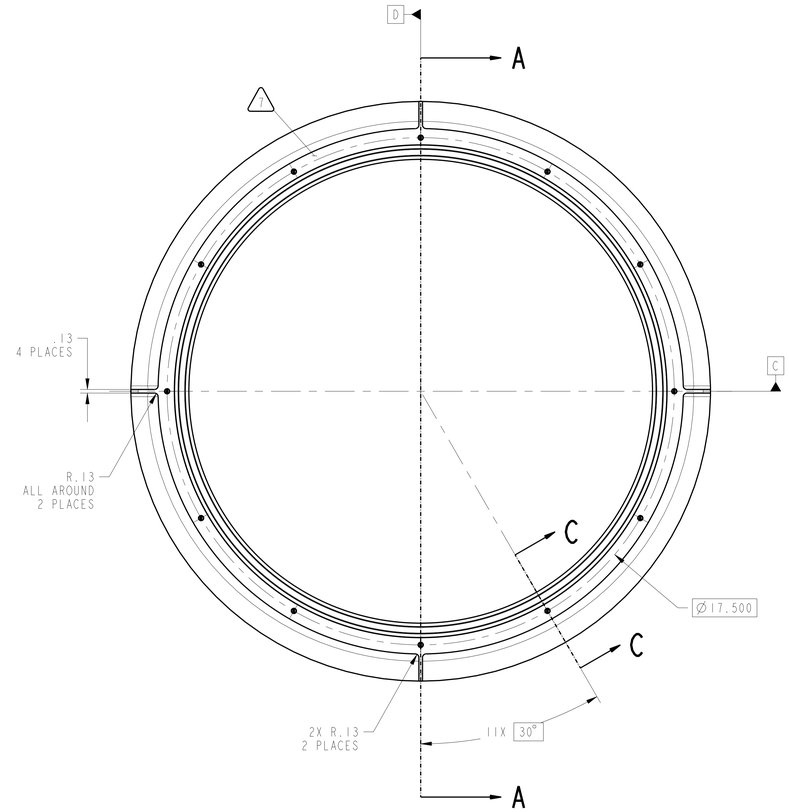

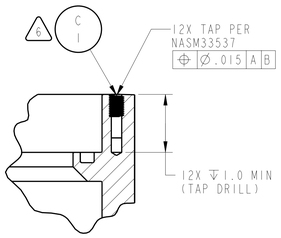

SECTION C-C
SCALE 1/1

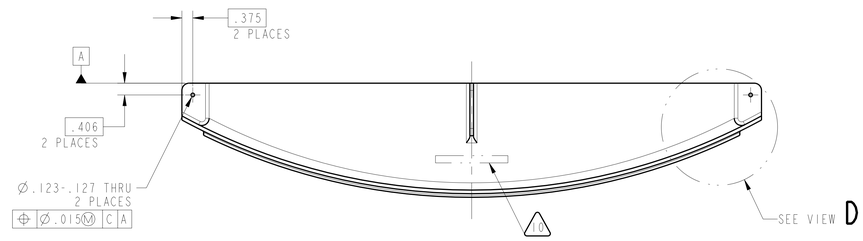

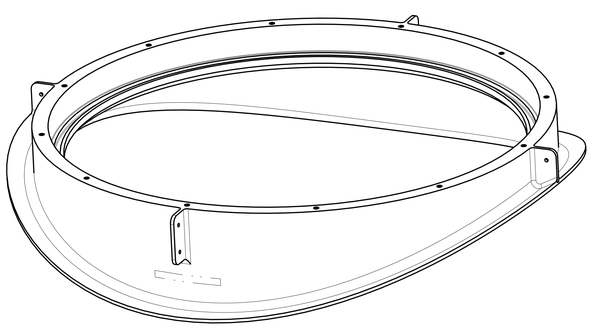

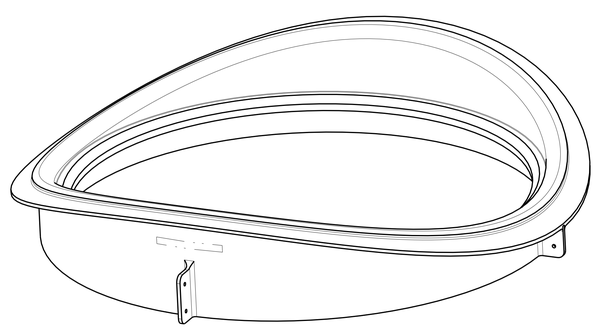

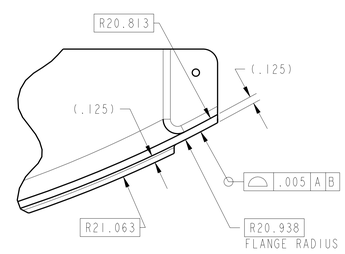

DETAIL D
SCALE 1/1

CHG	ZONE	DESCRIPTION	APP/DATE

REVISIONS

PRIOR TO USE VERIFY THE INTENDED PURPOSE IN PDM ("FOR" ATTRIBUTE)

UNLESS OTHERWISE SPECIFIED DIMENSIONS ARE IN INCHES

TOLERANCE ON	
X	± 0.03
XX	± 0.01
XXX	± 0.005
FRACTION	± -
ANGULAR	± 0.50°
BREAK EDGES	.01-.02

CONTRACT
CONTRACTOR
TASK ORDER

DRAFTER	DEZ/ L. SPINELLI
ENGINEER	DES/ J. POLACK
DESIGNER	DEZ/ L. SPINELLI

DIMENSIONING AND TOLERANCING PER ASME Y14.5M-1994

????	SINGLE PART DRAWING
????-?	CHARTED PART DRAWING
C ?	COMMERCIAL PART
E ?	EXISTING PART

PDM REL LEVEL: Released PDM REVISION: -
PDM DATABASE: 140403_S3_Viking_Research_Pod
MODEL NAME: 140403MFA101_WINDOW_FRAME
CHECK FOR ANY OUTSTANDING ECO'S PRIOR TO USE

NATIONAL AERONAUTICS AND SPACE ADMINISTRATION
JOHN H. GLENN RESEARCH CENTER
LEWIS FIELD
CLEVELAND, OHIO

WINDOW ASSEMBLY
140104MFA100

A101 WINDOW FRAME

SIZE	DRAWING NUMBER	REV	BLDG	AREA
E	140403MFA101	-	4	HANGAR

UNITS: INCH

SCALE:	INITIAL REL DATE	SHEET	DISCIPLINE
1/2	06/26/2014	1 OF 1	MECHANICAL

PRO/E VERSION: Wildfire 5.0

SIZE E DRAWING NUMBER 140403MFA101 REV -

A

PAGE SIZE: 36.00 X 24.00 DATE: 06-Jun-14 13:40:00 FILE: C:\DATA\WORKING\140403_WINDOW_FRAME