NOTICE - WHEN GOVERNMENT DRAWINGS, SPECIFICATIONS, OR OTHER DATA ARE USED FOR ANY PURPOSE OTHER THAN IN CONNECTION WITH A DEFINITELY RELATED GOVERNMENT PROCUREMENT OPERATION, THE UNITED STATES GOVERNMENT THEREBY INCURS NO RESPONSIBILITY NOR ANY OBLIGATION WHATSOEVER; AND THE FACT THAT THE GOVERNMENT MAY HAVE FORMULATED, FURNISHED, OR IN ANY WAY SUPPLIED THE SAID DRAWINGS, SPECIFICATIONS OR OTHER DATA IS NOT TO BE REGARDED BY IMPLICATION OR OTHERWISE AS IN ANY MANNER LICENSING THE HOLDER OR ANY OTHER PERSON OR CORPORATION, OR CONVEYING ANY RIGHTS OR PERMISSION TO MANUFACTURE, USE, OR SELL ANY PATENTED INVENTION THAT MAY IN ANY WAY BE RELATED THERETO.

REVISIONS

SYM	DESCRIPTION	DATE	APPROVAL

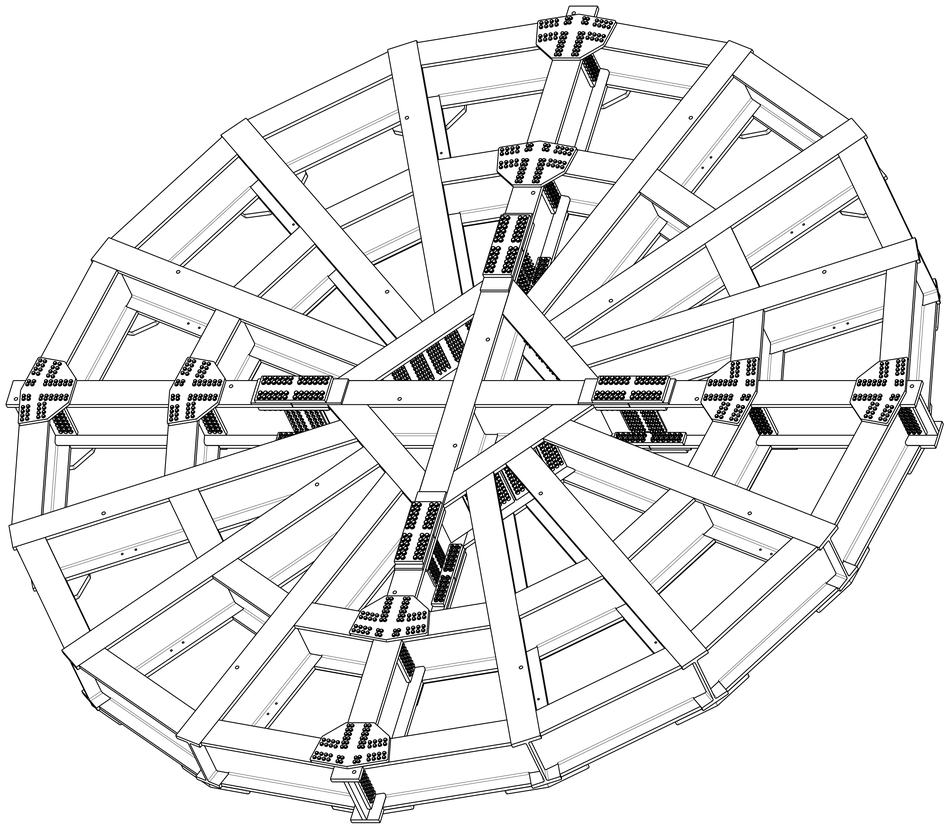

VISUAL REFERENCE ONLY
NO SCALE

UNLESS OTHERWISE SPECIFIED:

1. REMOVE ALL BURRS AND BREAK ALL SHARP EDGES.

2. 125 ALL MACHINED SURFACES.
   500 ALL EDGES OF CUT PLATES AND ENDS OF AISC SHAPES.

3. DIMENSIONING AND TOLERANCING IN ACCORDANCE WITH ASME Y14.5-1994.

4. PAINT ALL EXPOSED SURFACES USING THE FOLLOWING FINISH: PREPARE SURFACES, ABRASIVE CLEANING WHERE NECESSARY, THEN POLYURETHANE PRIME AND TOP COAT USING SHERWIN WILLIAMS POLANE F63. SUBSTITUTION OF OTHER INDUSTRIAL RATED POLYURETHANE ENAMEL PERMITTED WITH NASA ENGINEERING APPROVAL.

   FINISH COLOR BLUE NO. 15102 PER FED-STD-595C. SUBSTITUTION OR ALTERNATE COLOR MATCH PERMITTED WITH NASA ENGINEERING APPROVAL.

   DO NOT PAINT MACHINED OR OTHER INDICATED SURFACES. DO NOT PAINT HOLES OR THREADS. AREAS DAMAGED DURING ASSEMBLY OR INSTALLATION SHALL BE TOUCHED UP AFTER DELIVERY USING BRUSH OR ROLLER ONLY. PROTECT UNPAINTED SURFACES WITH TRI-FLOW TO PREVENT CORROSION.

5. ALIGN AND ASSEMBLE TO DIMENSIONS SHOWN. MATCH DRILL HOLES BY TRANSFERRING HOLE PATTERN FROM PART OR WELDMENT TO MATING COMPONENT(S). MATCH MARK (STEEL STAMPING) MATING PARTS USING 1.0" TALL CHARACTERS. MARK SHALL BE UNIQUE COMBINATION OF ALPHABET LETTERS AND/OR NUMBERS. EXAMPLE: A1, AB, ETC.

6. ALL CONNECTIONS SHALL BE PREPARED PER AISC/RCSC "SPECIFICATION FOR STRUCTURAL JOINTS USING HIGH-STRENGTH BOLTS", DECEMBER 31, 2009 EDITION, FOR CLASS B SLIP CRITICAL JOINTS AND TORQUED AS FOLLOWS:

   FABRICATION TORQUE VALUES:

   1" DIA: 207-300 FT-LBS
   1-1/4" DIA: 563-660 FT-LBS
   1-3/8" DIA: 980-1150 FT-LBS

   FINAL ASSEMBLY TORQUE VALUES:

   1" DIA: 515-600 FT-LBS
   1-1/4" DIA: 1125-1320 FT-LBS
   1-3/8" DIA: 1960-2300 FT-LBS

7. PROVIDE FULL-CONTACT SHIMS BETWEEN MATING PARTS AS NEEDED. MATCH MARK SHIMS AND MATING PARTS FOR REASSEMBLY BY ETCHING SHIMS AND STEEL STAMPING WELDMENTS USING 1" TALL CHARACTERS. MARK SHALL BE UNIQUE COMBINATION OF ALPHABET LETTERS AND/OR NUMBERS. EXAMPLE: A1, AB, ETC.

SUGGESTED VENDOR:

1) BIG BOLTS
   140 COVINGTON DR.
   BLOOMINGDALE, IL 60108
   WWW.BIGBOLT.NET

- PRELIMINARY -
THIS DRAWING HAS NOT COMPLETED THE REVIEW PROCESS AND IS SUBJECT TO CHANGE.
07-16-14
DATE

FIND NO.	CALLOUT SHT NO.	DETAIL SHT NO.	TOT REQ'D		PART NO.	DESCRIPTION		VEND NO.	REMARKS
20	4	-	384	P	90M13931-20	1-3/8"-6UNC-2B HEX NUT, ZINC PLATED			MATERIAL: ASTM A563, DH
19	4	-	768	P	90M13931-19	1-3/8" SCREW SIZE, 2-3/4" OD, WASHER, ZINC PLATED			MATERIAL: ASTM F436, TYPE 1
18	4	-	960	P	90M13931-18	1-1/4-7UNC-2B HEX NUT, ZINC PLATED			MATERIAL: ASTM A563, DH
17	2,4	-	704	P	90M13931-17	1-8UNC-2B HEX NUT, ZINC PLATED			MATERIAL: ASTM A563, DH
16	4	-	1920	P	90M13931-16	1-1/4" SCREW SIZE, 2-1/2" OD, WASHER, ZINC PLATED			MATERIAL: ASTM F436, TYPE 1
15	2,4	-	1408	P	90M13931-15	1" SCREW SIZE, 2" OD, WASHER, ZINC PLATED			MATERIAL: ASTM F436, TYPE 1
14	4	-	384	P	90M13931-14	1-1/4-7UNC-2A HX HD CAP SCRW X 10.00 LG, 6.375 GRIP, 180 KSI UTF, ZINC PLATED	I		MATERIAL: 4140 ALLOY STEEL
13	4	-	384	P	90M13931-13	1-3/8"-6UNC-2A HX HD CAP SCRW X 9.00 LG, 7.00 GRIP, 170 KSI UTF, ZINC PLATED	I		MATERIAL: 4140 ALLOY STEEL
12	4	-	576	P	90M13931-12	1-1/4-7UNC-2A HX HD CAP SCRW X 5.50 LG, 4.50 GRIP, 180 KSI UTF, ZINC PLATED	I		MATERIAL: 4140 ALLOY STEEL
11	2	-	512	P	90M13931-11	1-8UNC-2A HX HD CAP SCRW X 6.50 LG, 4.375 GRIP, 180 KSI UTF, ZINC PLATED	I		MATERIAL: 4140 ALLOY STEEL
10	4	-	192	P	90M13931-10	1-8UNC-2A HX HD CAP SCRW X 5.50 LG, 4.50 GRIP, 180 KSI UTF, ZINC PLATED	I		MATERIAL: 4140 ALLOY STEEL
9	4	-	8	F	90M13931-9	1.0" STK. PLATE 25.0" X 21.0"			MATERIAL: ASTM A572 GRADE 50 (WEB SPLICE JOINT AA)
8	4	-	16	F	90M13931-8	2.5" STK. PLATE 42.3" X 7.8"			MATERIAL: ASTM A572 GRADE 50 (JOINT AA INNER)
7	4	-	8	F	90M13931-7	2.5" STK. PLATE 42.3" X 17.0"			MATERIAL: ASTM A572 GRADE 50 (JOINT AA OUTER)
6	2	2	8	F	90M13931-6	TOP QUADRANT SPLICE PLATE			MATERIAL: ASTM A572 GRADE 50
5	2	-	AR	P	90M13931-5	2.0" STK. PLATE			MATERIAL: ASTM A572 GRADE 50
4	2	-	4	E	90M14149-1	UPPER SPIDER QUADRANT WELDMENT SLS ENGINE SECTION TEST			
3	2	-	4	E	90M14344-1	UPPER SPIDER LATERAL SUPPORT BEAM WELDMENT SLS ENGINE SECTION TEST			
2	2	-	1	E	90M14150-1	UPPER SPIDER CENTER SUPPORT WELDMENT SLS ENGINE SECTION TEST			
1	-	2	-	A	90M13931-1	UPPER SPIDER ASSEMBLY SLS ENGINE SECTION TEST			

A:ASSEMBLY/INSTALLATION E:EXISTING F:FABRICATED ITEM M:MODIFIED ITEM P:PURCHASED ITEM

STRESS	DATE	PROGRAM MANAGER	DATE
MATERIALS	DATE	TEST ENGINEER/REQUESTER	DATE
INDUSTRIAL SAFETY	DATE	ETS0 CONTRACTOR DESIGN LEAD	DATE
SAFETY AND MISSION ASSURANCE	DATE	ETS0 CIVIL SERVICE LEAD	DATE
BOEING TEST CONDUCTOR	DATE	CHECKER	DATE
PRESSURE CERTIFICATION MANAGER	DATE	ETS0 BRANCH CHIEF/TEAM LEAD	DATE

UNLESS OTHERWISE SPECIFIED
TOLERANCES ARE
FRACTIONS: ± 1/16 ± 1/2"
DECIMALS: .X ± .06; .XX ± .03; .XXX ± .010; ∠ ± .50°
(DIMENSIONS ARE IN INCHES, DO NOT SCALE DRAWING)

DRWN BY: A. HANNAH | NEXT ASSEMBLY: 90M13930 | DATE: 1-22-14

UPPER SPIDER ASSEMBLY SLS ENGINE SECTION TEST

SPECIAL TEST EQUIPMENT DESIGN BRANCH - ET50
GEORGE C. MARSHALL SPACE FLIGHT CENTER
NATIONAL AERONAUTICS AND SPACE ADMINISTRATION
HUNTSVILLE, ALABAMA

90M13931 | REVISION ~

DWG SIZE F | SHEET 1 OF 4

APPROVED FOR PUBLIC RELEASE; DISTRIBUTION IS UNLIMITED

NOTICE - WHEN GOVERNMENT DRAWINGS, SPECIFICATIONS, OR OTHER DATA ARE USED FOR ANY PURPOSE OTHER THAN IN CONNECTION WITH A DEFINITELY RELATED GOVERNMENT PROCUREMENT OPERATION, THE UNITED STATES GOVERNMENT THEREBY INCURS NO RESPONSIBILITY NOR ANY OBLIGATION WHATSOEVER, AND THE FACT THAT THE GOVERNMENT MAY HAVE FORMULATED, FURNISHED, OR IN ANY WAY SUPPLIED THE SAID DRAWINGS, SPECIFICATIONS OR OTHER DATA IS NOT TO BE REGARDED BY IMPLICATION OR OTHERWISE AS IN ANY MANNER LICENSING THE HOLDER OR ANY OTHER PERSON OR CORPORATION, OR CONVEYING ANY RIGHTS OR PERMISSION TO MANUFACTURE, USE, OR SELL ANY PATENTED INVENTION THAT MAY IN ANY WAY BE RELATED THERETO.

REVISIONS

SYM	DESCRIPTION	DATE	APPROVAL

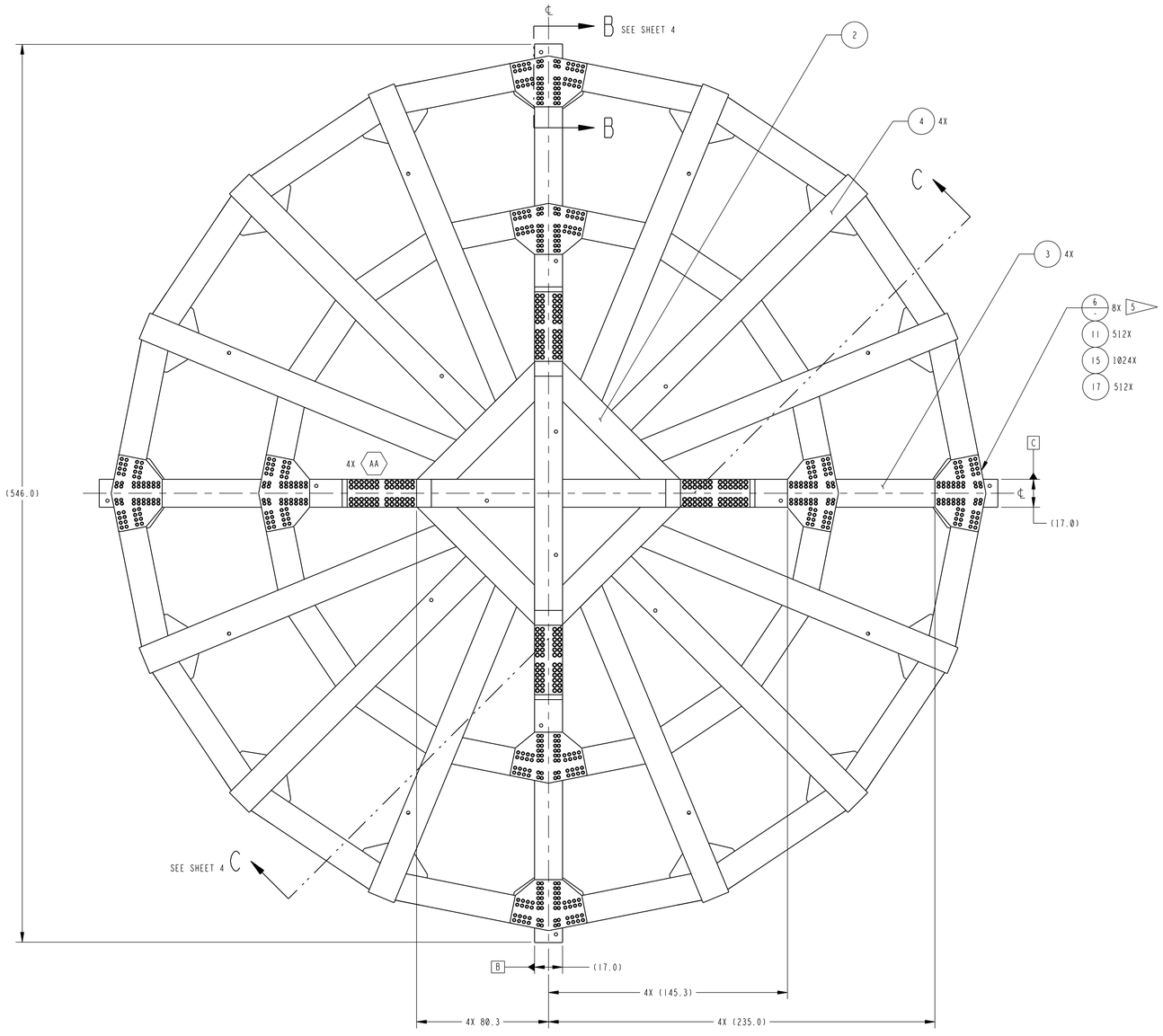

SEE SHEET 4 FOR SPLICE JOINT DETAILS AA

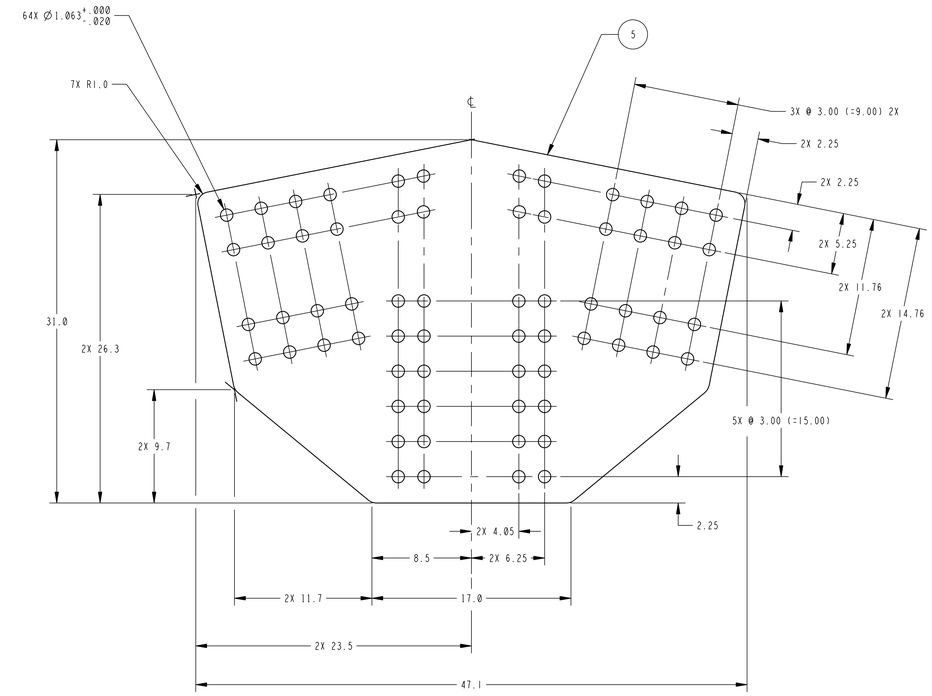

FIND NO. 6 -

OUTER PLATE DIMENSIONS ARE TO CORNERS
PRIOR TO ADDING RADII
SCALE 1/5

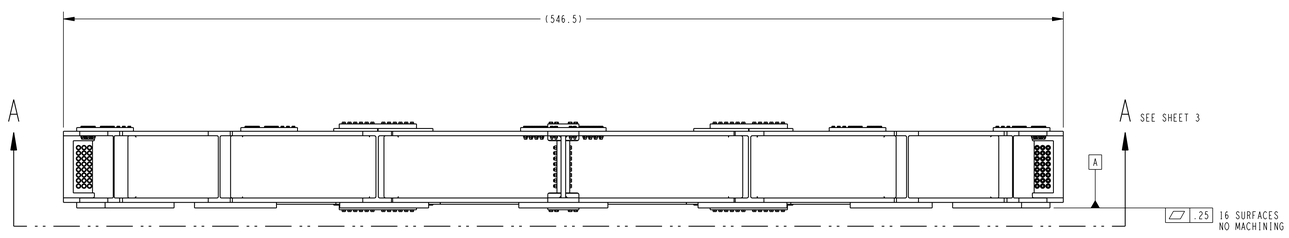

ASSEMBLY 1 4 7

ESTIMATED WEIGHT (INCLUDING FASTENERS) = 295,100 LBS.
SCALE 1/32

- PRELIMINARY -
THIS DRAWING HAS NOT COMPLETED THE REVIEW PROCESS AND IS SUBJECT TO CHANGE.
07-16-14
DATE

APPROVED FOR PUBLIC RELEASE; DISTRIBUTION IS UNLIMITED

UPPER SPIDER
ASSEMBLY
SLS ENGINE SECTION
TEST

SPECIAL TEST EQUIPMENT
DESIGN BRANCH - ET50
GEORGE C. MARSHALL
SPACE FLIGHT CENTER
NATIONAL AERONAUTICS
AND SPACE ADMINISTRATION
HUNTSVILLE, ALABAMA

90M13931 REVISION SEE SHT1

DWG SIZE E SHEET 2 OF 4

NOTICE - WHEN GOVERNMENT DRAWINGS, SPECIFICATIONS, OR OTHER DATA ARE USED FOR ANY PURPOSE OTHER THAN IN CONNECTION WITH A DEFINITELY RELATED GOVERNMENT PROCUREMENT OPERATION, THE UNITED STATES GOVERNMENT THEREBY INCURS NO RESPONSIBILITY NOR ANY OBLIGATION WHATSOEVER; AND THE FACT THAT THE GOVERNMENT MAY HAVE FORMULATED, FURNISHED, OR IN ANY WAY SUPPLIED THE SAID DRAWINGS, SPECIFICATIONS OR OTHER DATA IS NOT TO BE REGARDED BY IMPLICATION OR OTHERWISE AS IN ANY MANNER LICENSING THE HOLDER OR ANY OTHER PERSON OR CORPORATION, OR CONVEYING ANY RIGHTS OR PERMISSION TO MANUFACTURE, USE, OR SELL ANY PATENTED INVENTION THAT MAY IN ANY WAY BE RELATED THERETO.

REVISIONS

SYM	DESCRIPTION	DATE	APPROVAL

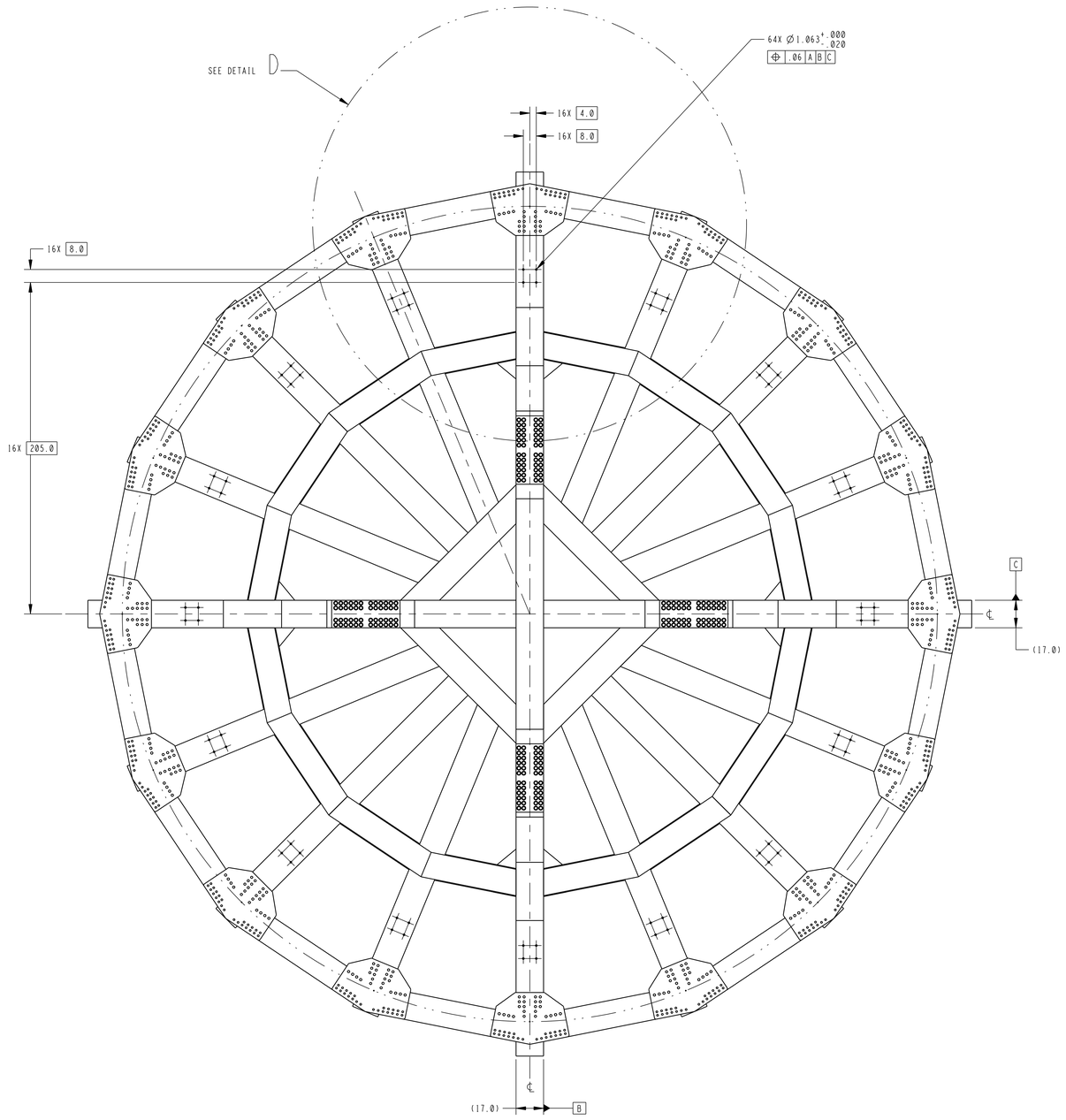

VIEW A - A
SEE SHEET 2
SCALE 1/32

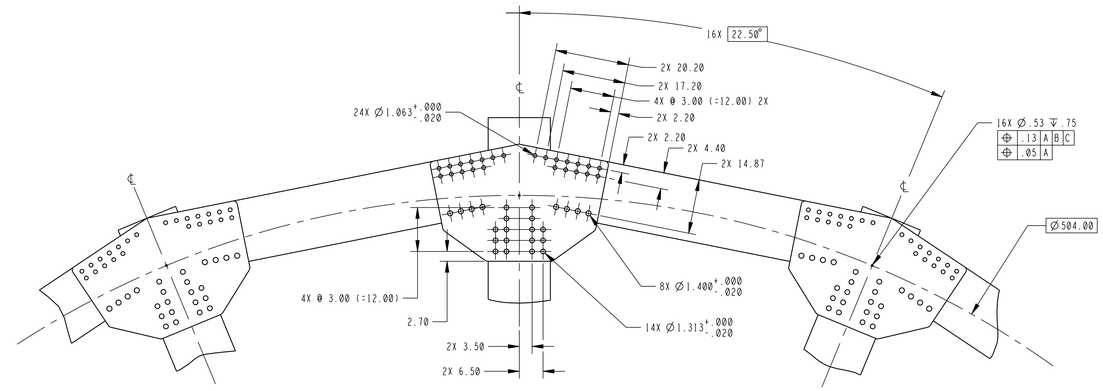

DETAIL D
OUTER PLATE DIMENSIONS ARE TO CORNERS
PRIOR TO ADDING RADII
SCALE 1/16

- PRELIMINARY -
THIS DRAWING HAS NOT COMPLETED THE REVIEW PROCESS AND IS SUBJECT TO CHANGE.
07-16-14
DATE

APPROVED FOR PUBLIC RELEASE; DISTRIBUTION IS UNLIMITED

UPPER SPIDER ASSEMBLY
SLS ENGINE SECTION TEST

SPECIAL TEST EQUIPMENT DESIGN BRANCH - ET50
GEORGE C. MARSHALL SPACE FLIGHT CENTER
NATIONAL AERONAUTICS AND SPACE ADMINISTRATION
HUNTSVILLE, ALABAMA

90M13931 | REVISION SEE SHT1

DRWG SIZE E | SHEET 3 OF 4

NOTICE - WHEN GOVERNMENT DRAWINGS, SPECIFICATIONS, OR OTHER DATA ARE USED FOR ANY PURPOSE OTHER THAN IN CONNECTION WITH A DEFINITELY RELATED GOVERNMENT PROCUREMENT OPERATION, THE UNITED STATES GOVERNMENT THEREBY INCURS NO RESPONSIBILITY NOR ANY OBLIGATION WHATSOEVER; AND THE FACT THAT THE GOVERNMENT MAY HAVE FORMULATED, FURNISHED, OR IN ANY WAY SUPPLIED THE SAID DRAWINGS, SPECIFICATIONS OR OTHER DATA IS NOT TO BE REGARDED BY IMPLICATION OR OTHERWISE AS IN ANY MANNER LICENSING THE HOLDER OR ANY OTHER PERSON OR CORPORATION, OR CONVEYING ANY RIGHTS OR PERMISSION TO MANUFACTURE, USE, OR SELL ANY PATENTED INVENTION THAT MAY IN ANY WAY BE RELATED THERETO.

REVISIONS			
SYM	DESCRIPTION	DATE	APPROVAL

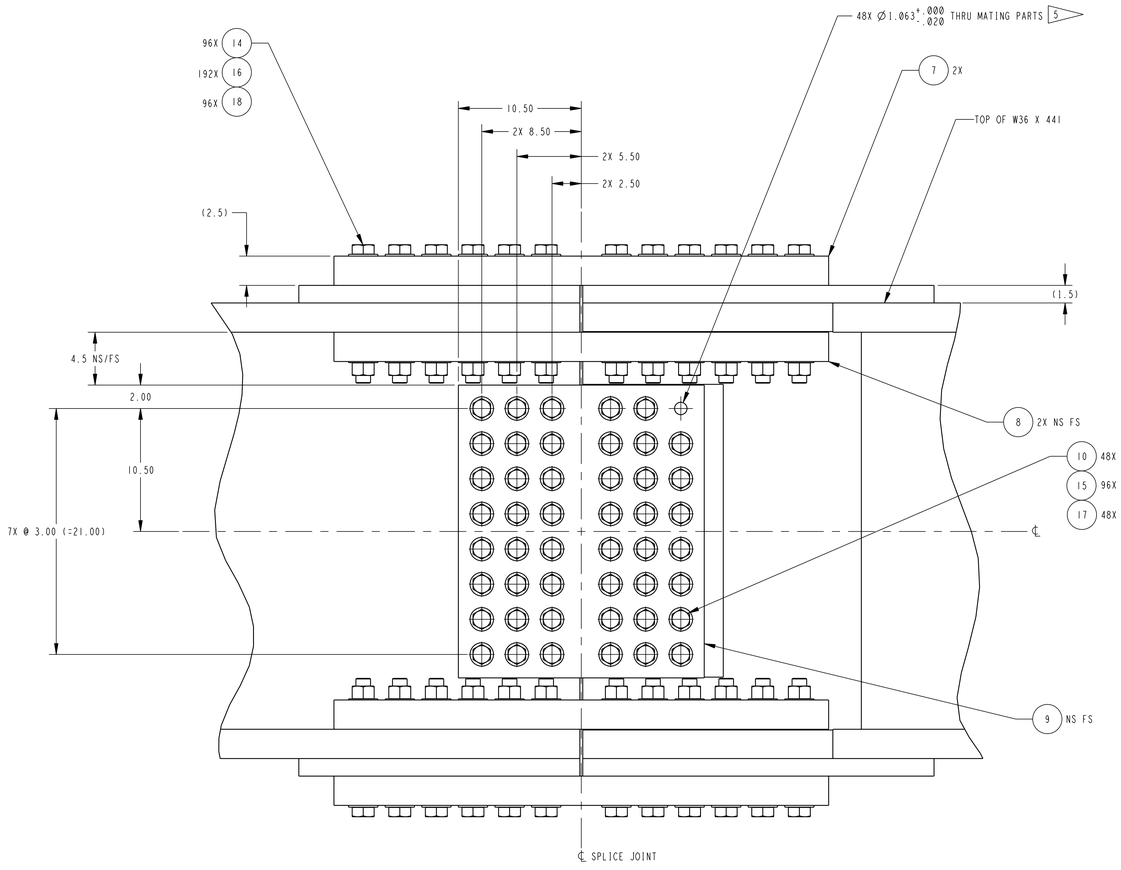

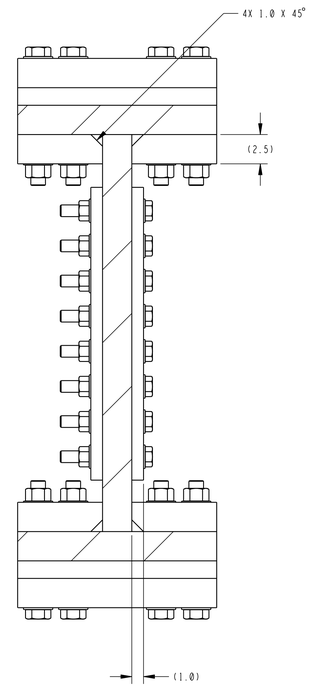

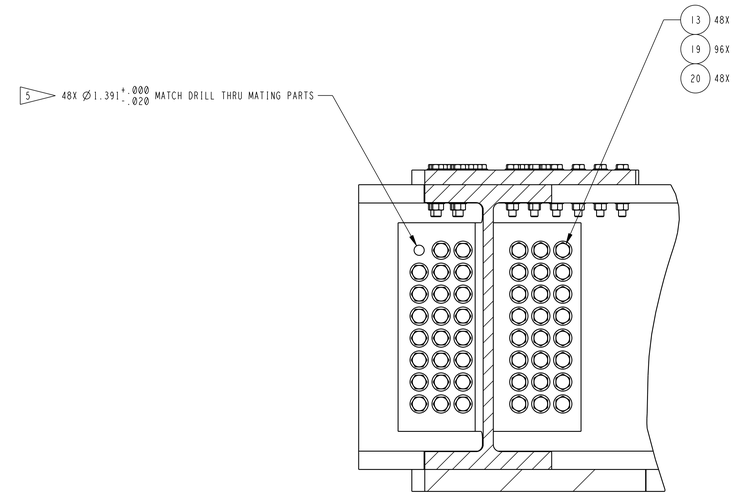

SECTION B - B
4X AS SHOWN, 4X SIMILAR
SEE SHEET 2
SOME HARDWARE REMOVED FOR DIMENSIONING
SCALE 1/8

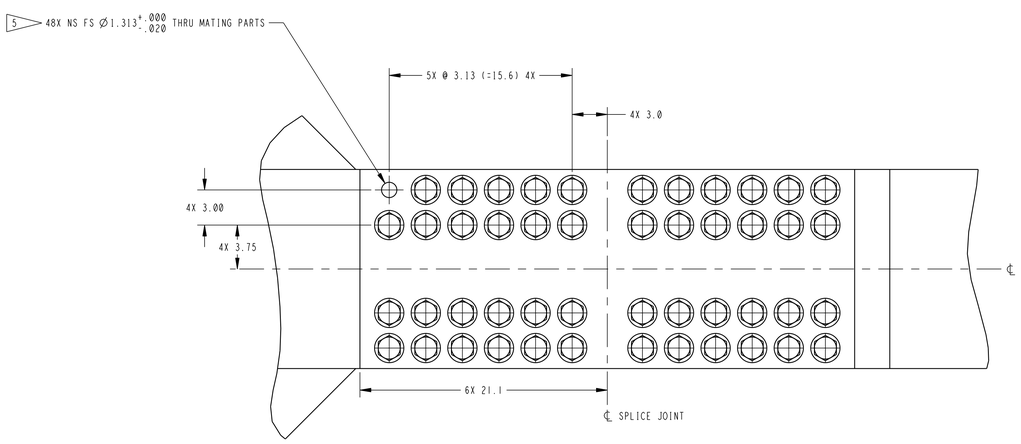

SPLICE JOINT AA
4 PLACES
SEE SHEET 2
SOME HARDWARE REMOVED FOR DIMENSIONING
SCALE 1/5

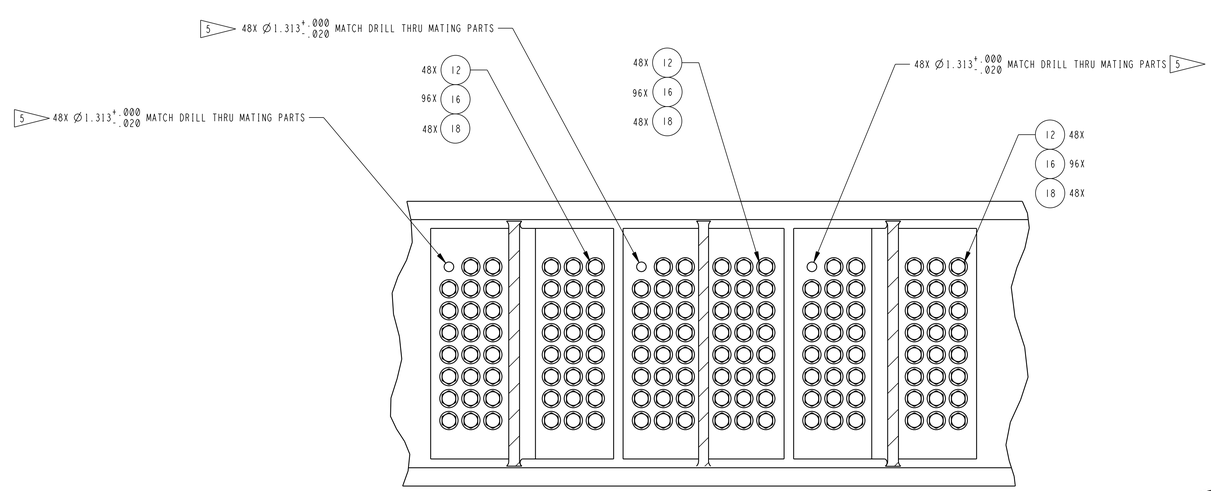

SECTION C - C
4X
SEE SHEET 2
SOME PARTS REMOVED FOR DIMENSIONING
SCALE 1/8

- PRELIMINARY -
THIS DRAWING HAS NOT COMPLETED THE REVIEW PROCESS AND IS SUBJECT TO CHANGE.
07-16-14
DATE

APPROVED FOR PUBLIC RELEASE; DISTRIBUTION IS UNLIMITED

UPPER SPIDER ASSEMBLY
SLS ENGINE SECTION TEST

SPECIAL TEST EQUIPMENT DESIGN BRANCH - ET50
GEORGE C. MARSHALL SPACE FLIGHT CENTER
NATIONAL AERONAUTICS AND SPACE ADMINISTRATION
HUNTSVILLE, ALABAMA

90M13931 REVISION SEE SHT1

DWG SIZE E SHEET 4 OF 4

NOTICE - WHEN GOVERNMENT DRAWINGS, SPECIFICATIONS, OR OTHER DATA ARE USED FOR ANY PURPOSE OTHER THAN IN CONNECTION WITH A DEFINITELY RELATED GOVERNMENT PROCUREMENT OPERATION, THE UNITED STATES GOVERNMENT THEREBY INCURS NO RESPONSIBILITY NOR ANY OBLIGATION WHATSOEVER; AND THE FACT THAT THE GOVERNMENT MAY HAVE FORMULATED, FURNISHED, OR IN ANY WAY SUPPLIED THE SAID DRAWINGS, SPECIFICATIONS OR OTHER DATA IS NOT TO BE REGARDED BY IMPLICATION OR OTHERWISE AS IN ANY MANNER LICENSING THE HOLDER OR ANY OTHER PERSON OR CORPORATION, OR CONVEYING ANY RIGHTS OR PERMISSION TO MANUFACTURE, USE, OR SELL ANY PATENTED INVENTION THAT MAY IN ANY WAY BE RELATED THERETO.

REVISIONS			
SYM	DESCRIPTION	DATE	APPROVAL

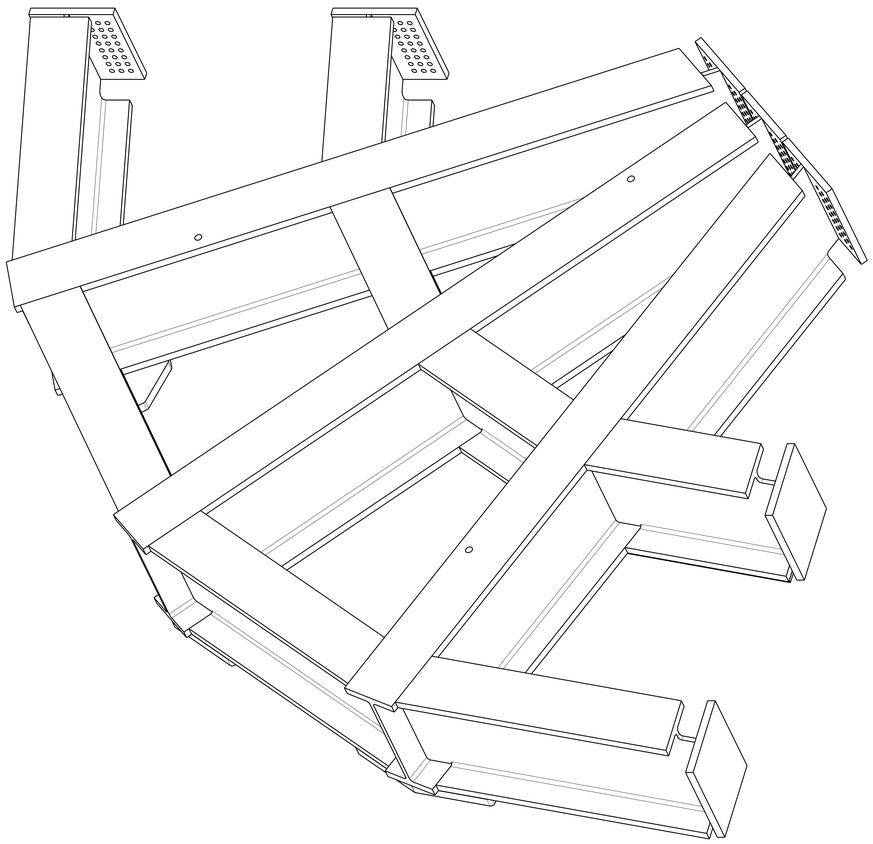

VISUAL REFERENCE ONLY
NO SCALE

UNLESS OTHERWISE SPECIFIED:

1. REMOVE ALL BURRS AND BREAK ALL SHARP EDGES.
2. 125 ALL MACHINED SURFACES.
   500 ALL EDGES OF CUT PLATES AND ENDS OF AISC SHAPES.
3. DIMENSIONING AND TOLERANCING IN ACCORDANCE WITH ASME Y14.5-1994.
4. STENCIL PART NUMBER IN THE APPROXIMATE LOCATION SHOWN USING A CONTRASTING COLOR AND 2" TALL LETTERS. STENCIL PART NUMBER TO BE COMPLETED AFTER PAINTING PER DRAWING 90M13931.
5. COPED JOINTS AND WELD ACCESS HOLES SHALL BE PER THE EDITION OF ANSI/AWS D1.1/D1.1M "STRUCTURAL WELDING CODE-STEEL" THAT IS CURRENT AT THE RELEASE DATE OF THIS DRAWING. NOTE THAT REQUIRED WELD ACCESS HOLES HAVE NOT BEEN SHOWN AT THE DETAIL LEVEL IN THIS DRAWING.
6. ALL STRUCTURAL STEEL SHAPES SHALL CONFORM TO THE DESIGNATIONS AND DIMENSIONS OF THE AISC "STEEL CONSTRUCTION MANUAL", 14TH EDITION.
7. STEEL WELDING DESIGN, PROCEDURES, AND NON-DESTRUCTIVE EVALUATION SHALL BE PER ANSI/AWS D1.1/D1.1M, "STRUCTURAL WELDING CODE-STEEL" AND CURRENT AS OF THE RELEASE DATE OF THIS DRAWING. UTILIZE WELDING PRACTICES AND TECHNIQUES TO MINIMIZE DISTORTION. UNLESS OTHERWISE SPECIFIED, WELDS SHALL BE 100% VISUALLY INSPECTED.
8. AFTER WELDING AND PRIOR TO FINAL MACHINING, STRESS RELIEVE PER AWS D1.1, "STRUCTURAL WELDING CODE, STEEL", AND CURRENT AS OF THE RELEASE DATE OF THIS DRAWING.
9. PRIOR TO FINAL WELDING,DRY FIT INTERFACE LOCATIONS PER DRAWING 90M13931 FLAG NOTE 5.

- PRELIMINARY -
THIS DRAWING HAS NOT COMPLETED THE REVIEW PROCESS AND IS SUBJECT TO CHANGE.
07-15-14
DATE

FIND NO.	CALLOUT SHT NO.	DETAIL SHT NO.	TOT REQ'D		PART NO.	DESCRIPTION	VEND NO.	REMARKS
7	3	-	4	P	90M14149-7	PLATE 2.50" THICK X 25.0" X 28.5" (2X DRILLED, 2X BLANK)		MAT'L: ASTM A572 GR 50
6	2	-	2	P	90M14149-6	PLATE 2.00" THICK X 25.0" X 31.5"		MAT'L: ASTM A572 GR 50
5	2	-	AR	P	90M14149-5	PLATE 3.00" THICK		MAT'L: ASTM A572 GR 50
4	2	-	1	P	90M14149-4	PLATE 2.00" THICK X 22.0" X 31.5"		MAT'L: ASTM A572 GR 50
3	2	-	AR	P	90M14149-3	PLATE 1.00" THICK		MAT'L: ASTM A572 GR 50
2	2	-	AR	P	90M14149-2	W36 X 441 WIDE FLANGE		MAT'L: ASTM A992 STL
1	-	2, 4	-	F	90M14149-1	UPPER SPIDER QUADRANT WELDMEMT, SLS ENGINE SECTION TEST		

A:ASSEMBLY/INSTALLATION E:EXISTING F:FABRICATED ITEM M:MODIFIED ITEM P:PURCHASED ITEM

STRESS	DATE	PROGRAM MANAGER	DATE
MATERIALS	DATE	TEST ENGINEER/REDESIGNER	DATE
INDUSTRIAL SAFETY	DATE	ETS0 CONTRACTOR DESIGN LEAD	DATE
SAFETY AND MISSION ASSURANCE	DATE	ETS0 CIVIL SERVICE LEAD	DATE
BOEING TEST CONDUCTOR	DATE	CHECKER	DATE
PRESSURE CERTIFICATION MANAGER	DATE	ETS0 BRANCH CHIEF/TEAM LEAD	DATE

UNLESS OTHERWISE SPECIFIED TOLERANCES ARE

FRACTIONS	DECIMALS
± 1/16	.X- ± .06
± 1°/2	.XX- ± .03
	.XXX- ± .010
	∠- ± .50°

(DIMENSIONS ARE IN INCHES, DO NOT SCALE DRAWING)

DRAWN BY	NEXT ASSEMBLY	DATE
DON BLEVINS	90M13931	12-12-13

UPPER SPIDER QUADRANT WELDMENT SLS ENGINE SECTION TEST

SPECIAL TEST EQUIPMENT DESIGN BRANCH - ET50
GEORGE C. MARSHALL SPACE FLIGHT CENTER
NATIONAL AERONAUTICS AND SPACE ADMINISTRATION
HUNTSVILLE, ALABAMA

90M14149 REVISION ~

DWG SIZE E SHEET 1 OF 4

APPROVED FOR PUBLIC RELEASE; DISTRIBUTION IS UNLIMITED

NOTICE - WHEN GOVERNMENT DRAWINGS, SPECIFICATIONS, OR OTHER DATA ARE USED FOR ANY PURPOSE OTHER THAN IN CONNECTION WITH A DEFINITELY RELATED GOVERNMENT PROCUREMENT OPERATION, THE UNITED STATES GOVERNMENT THEREBY INCURS NO RESPONSIBILITY NOR ANY OBLIGATION WHATSOEVER; AND THE FACT THAT THE GOVERNMENT MAY HAVE FORMULATED, FURNISHED, OR IN ANY WAY SUPPLIED THE SAID DRAWINGS, SPECIFICATIONS OR OTHER DATA IS NOT TO BE REGARDED BY IMPLICATION OR OTHERWISE AS IN ANY MANNER LICENSING THE HOLDER OR ANY OTHER PERSON OR CORPORATION, OR CONVEYING ANY RIGHTS OR PERMISSION TO MANUFACTURE, USE, OR SELL ANY PATENTED INVENTION THAT MAY IN ANY WAY BE RELATED THERETO.

REVISIONS			
SYM	DESCRIPTION	DATE	APPROVAL

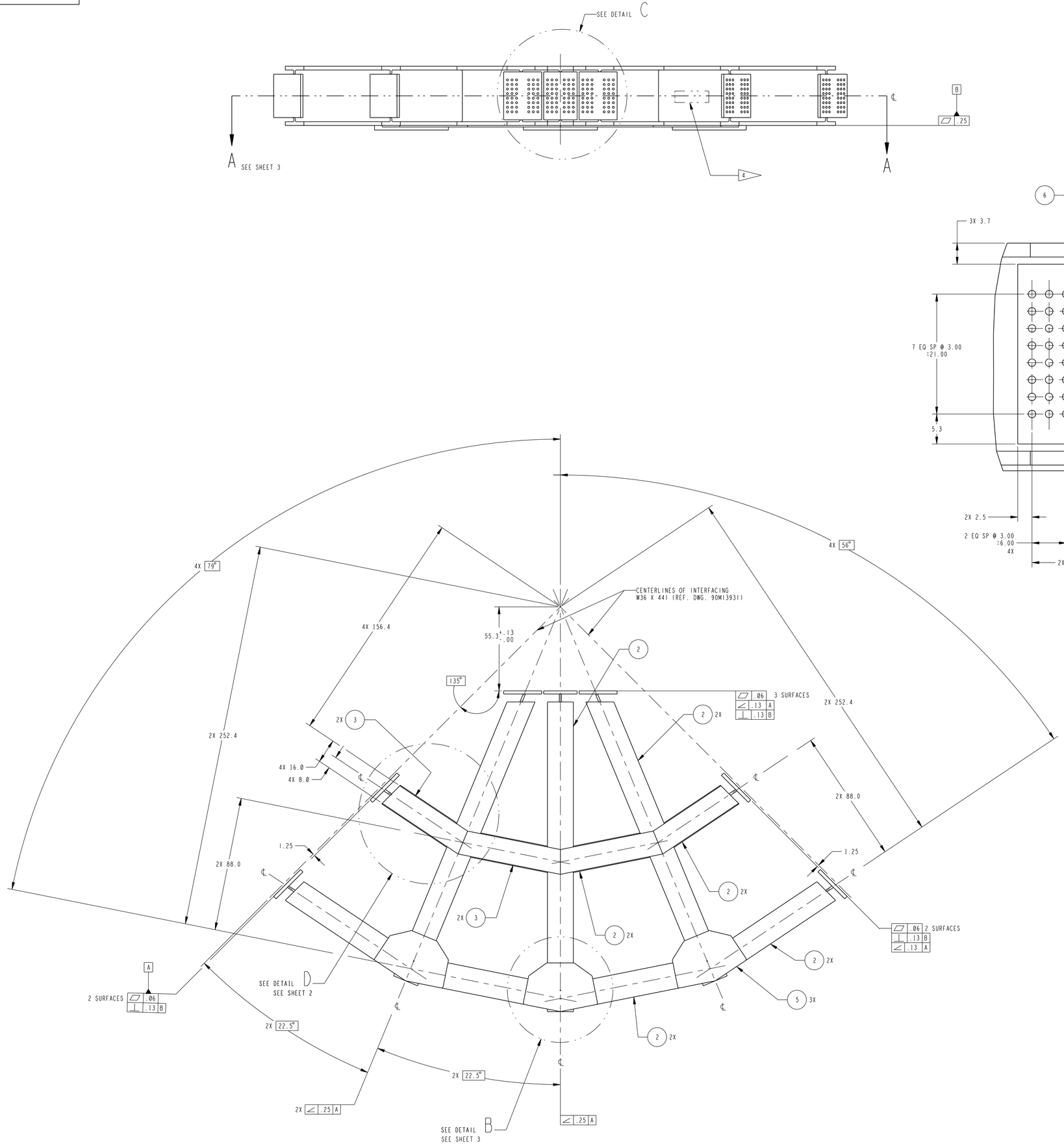

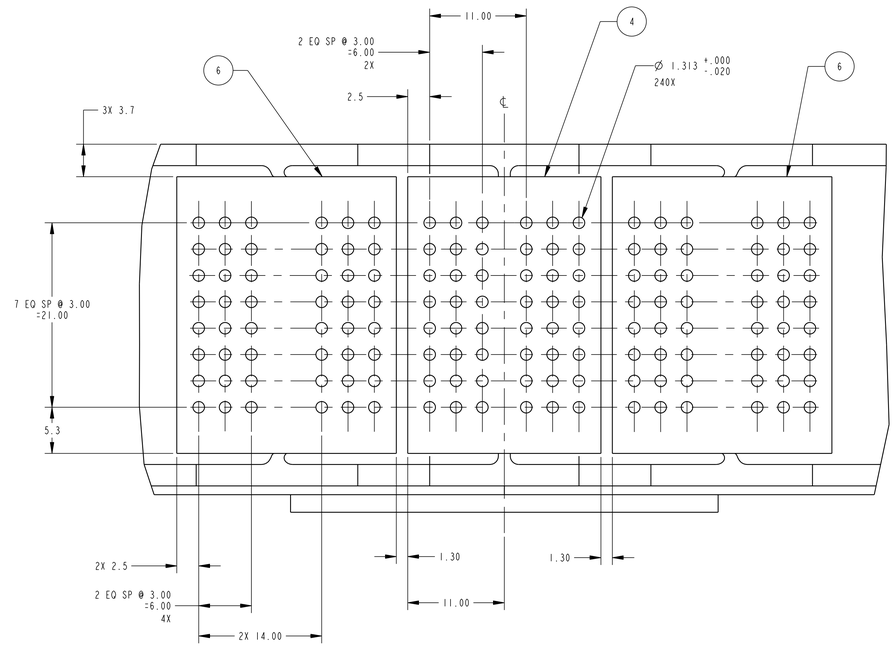

DETAIL C
SCALE 3/20

FIND NO. 1 9

ESTIMATED WEIGHT : 50,200 LBS.
SCALE 1/25

- PRELIMINARY -
THIS DRAWING HAS NOT COMPLETED THE REVIEW PROCESS AND IS SUBJECT TO CHANGE.
07-15-14
DATE

APPROVED FOR PUBLIC RELEASE; DISTRIBUTION IS UNLIMITED

UPPER SPIDER QUADRANT WELDMENT SLS ENGINE SECTION TEST

SPECIAL TEST EQUIPMENT DESIGN BRANCH - ET50
GEORGE C. MARSHALL SPACE FLIGHT CENTER
NATIONAL AERONAUTICS AND SPACE ADMINISTRATION
HUNTSVILLE, ALABAMA

90M14149 REVISION SEE SHT1

SIZE E SHEET 2 OF 4

NOTICE - WHEN GOVERNMENT DRAWINGS, SPECIFICATIONS, OR OTHER DATA ARE USED FOR ANY PURPOSE OTHER THAN IN CONNECTION WITH A DEFINITELY RELATED GOVERNMENT PROCUREMENT OPERATION, THE UNITED STATES GOVERNMENT THEREBY INCURS NO RESPONSIBILITY NOR ANY OBLIGATION WHATSOEVER, AND THE FACT THAT THE GOVERNMENT MAY HAVE FORMULATED, FURNISHED, OR IN ANY WAY SUPPLIED THE SAID DRAWINGS, SPECIFICATIONS OR OTHER DATA IS NOT TO BE REGARDED BY IMPLICATION OR OTHERWISE AS IN ANY MANNER LICENSING THE HOLDER OR ANY OTHER PERSON OR CORPORATION, OR CONVEYING ANY RIGHTS OR PERMISSION TO MANUFACTURE, USE, OR SELL ANY PATENTED INVENTION THAT MAY IN ANY WAY BE RELATED THERETO.

REVISIONS			
SYM	DESCRIPTION	DATE	APPROVAL

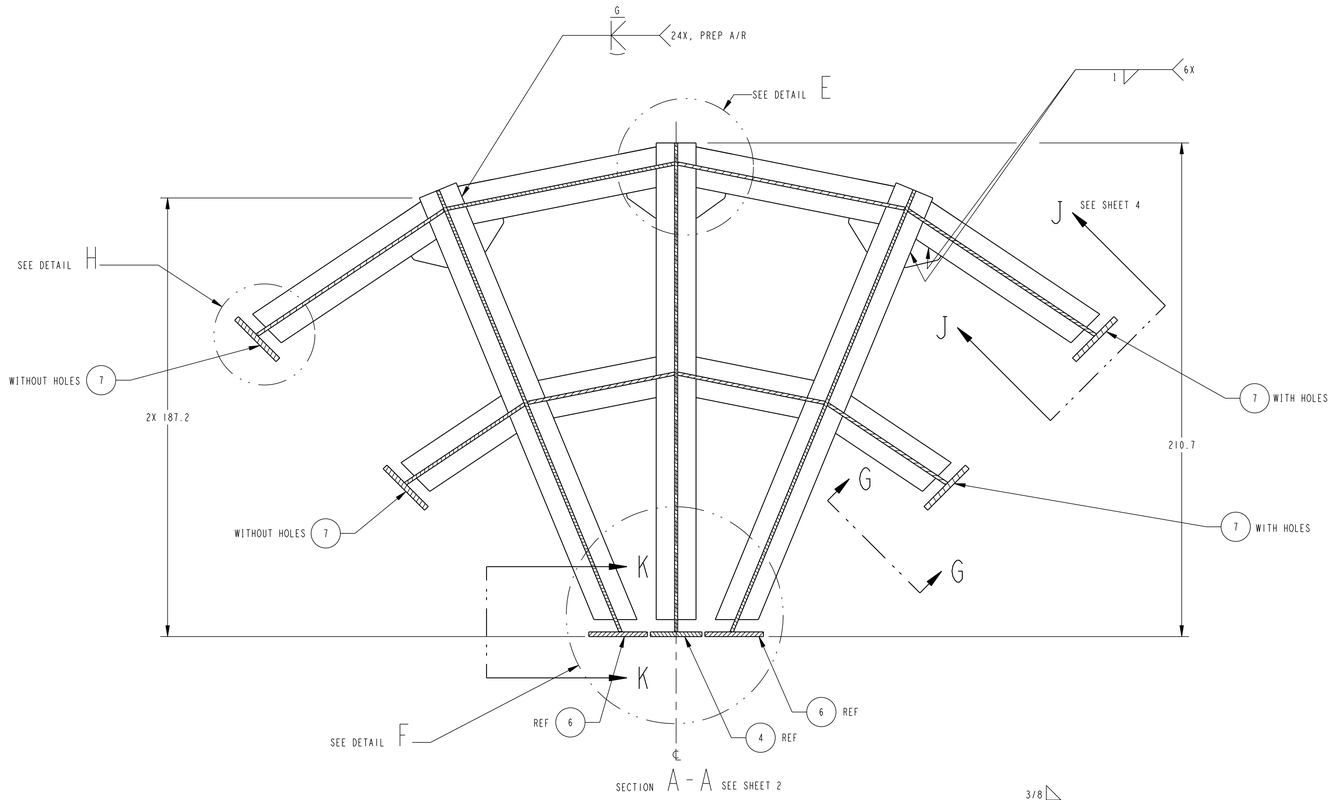

SECTION A - A SEE SHEET 2

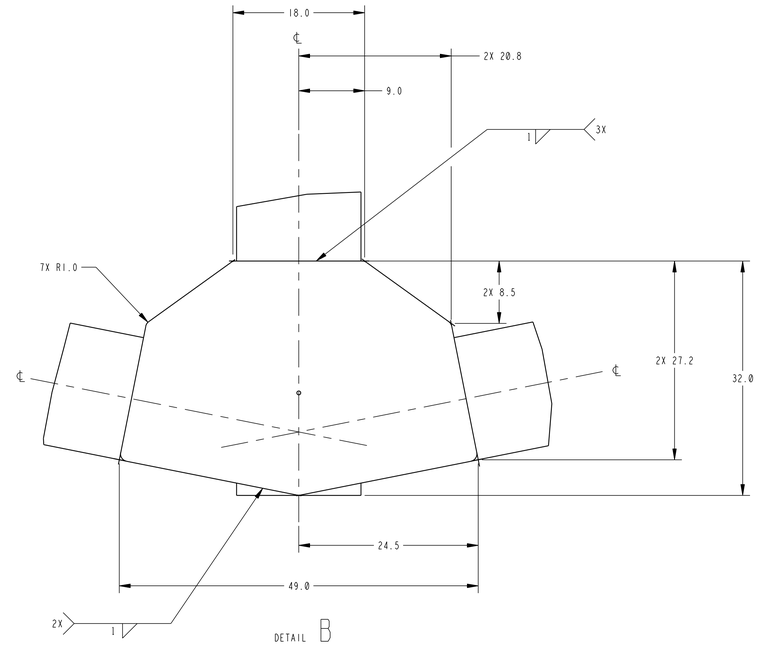

DETAIL B
3X
SEE SHEET 2
SCALE 1/8

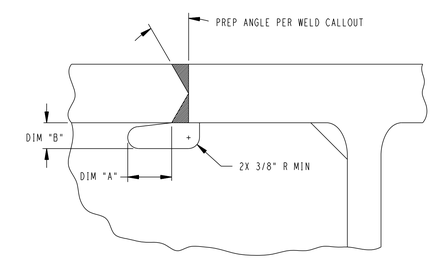

DIM "A" = 1.5 * WEB THICKNESS, BUT NOT LESS THAN 1-1/2"
DIM "B" = WEB THICKNESS, BUT NOT LESS THAN 3/4" NOR GREATER THAN 2"

WELD PREP DETAIL L

SCALE: NONE

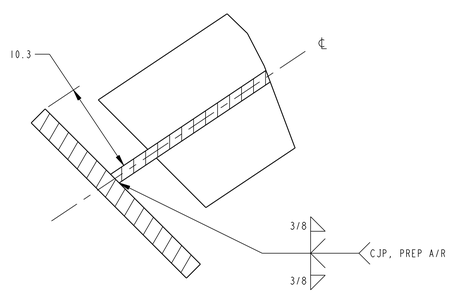

DETAIL H
2X AS SHOWN AND SIMILAR 2X
SCALE 3/20

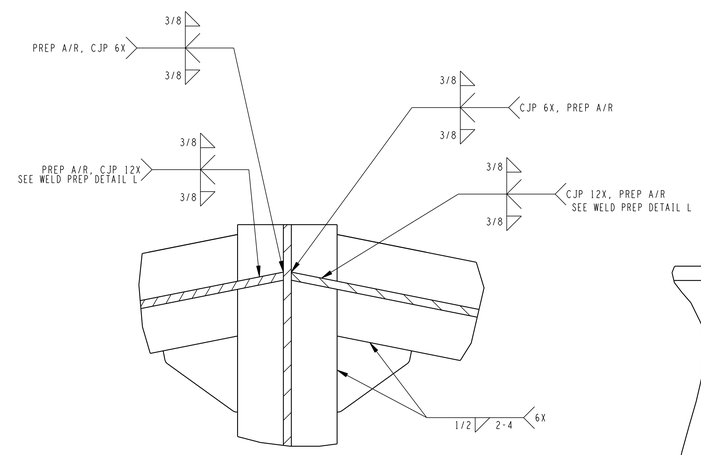

DETAIL E
SCALE 1/10

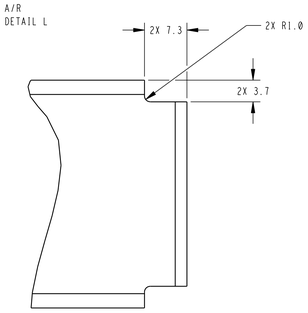

SECTION K - K
3X
SCALE 1/10

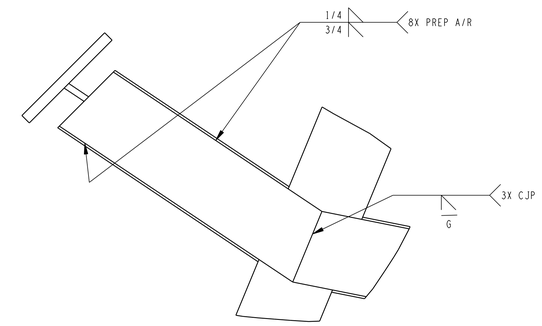

DETAIL D
SEE SHEET 2
SCALE 2/25

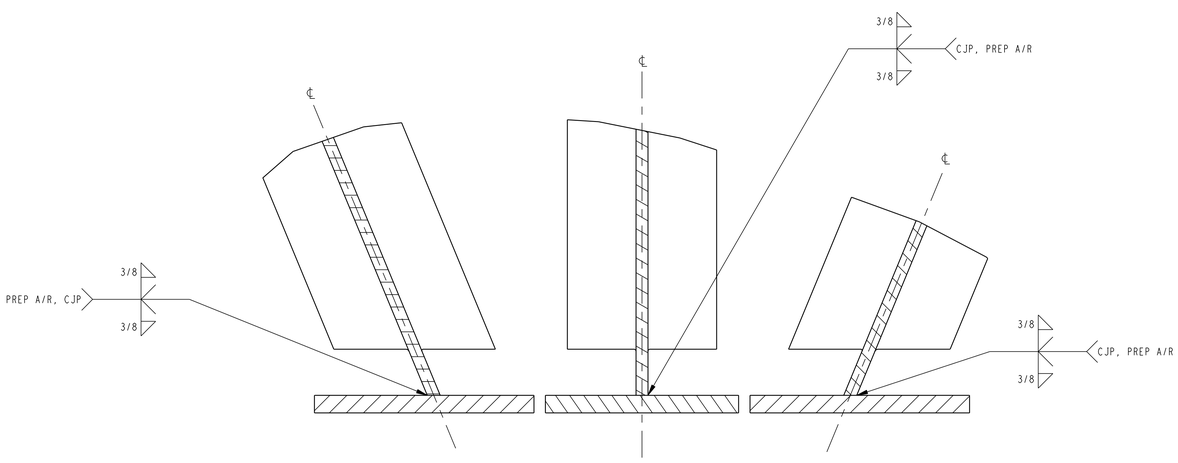

DETAIL F
SCALE 3/20

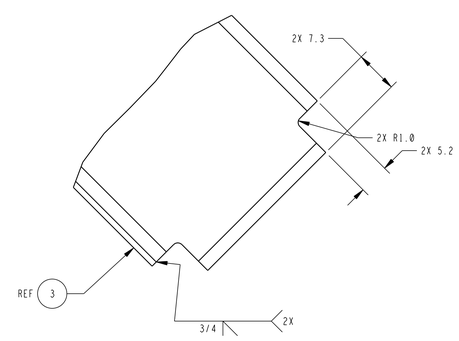

VIEW G - G
SCALE 1/10
2X AS SHOWN
SIMILAR 2X W/O F.N. -3

- PRELIMINARY -
THIS DRAWING HAS NOT COMPLETED THE REVIEW PROCESS AND IS SUBJECT TO CHANGE.
07-15-14
DATE

APPROVED FOR PUBLIC RELEASE; DISTRIBUTION IS UNLIMITED

UPPER SPIDER
QUADRANT WELDMENT
SLS ENGINE
SECTION TEST

SPECIAL TEST EQUIPMENT DESIGN BRANCH - ET50
GEORGE C. MARSHALL SPACE FLIGHT CENTER
NATIONAL AERONAUTICS AND SPACE ADMINISTRATION
HUNTSVILLE, ALABAMA

90M14149 | REVISION SEE SHT1

DWG SIZE E | SHEET 3 OF 4

NOTICE - WHEN GOVERNMENT DRAWINGS, SPECIFICATIONS, OR OTHER DATA ARE USED FOR ANY PURPOSE OTHER THAN IN CONNECTION WITH A DEFINITELY RELATED GOVERNMENT PROCUREMENT OPERATION, THE UNITED STATES GOVERNMENT THEREBY INCURS NO RESPONSIBILITY NOR ANY OBLIGATION WHATSOEVER; AND THE FACT THAT THE GOVERNMENT MAY HAVE FORMULATED, FURNISHED, OR IN ANY WAY SUPPLIED THE SAID DRAWINGS, SPECIFICATIONS OR OTHER DATA IS NOT TO BE REGARDED BY IMPLICATION OR OTHERWISE AS IN ANY MANNER LICENSING THE HOLDER OR ANY OTHER PERSON OR CORPORATION, OR CONVEYING ANY RIGHTS OR PERMISSION TO MANUFACTURE, USE, OR SELL ANY PATENTED INVENTION THAT MAY IN ANY WAY BE RELATED THERETO.

REVISIONS			
SYM	DESCRIPTION	DATE	APPROVAL

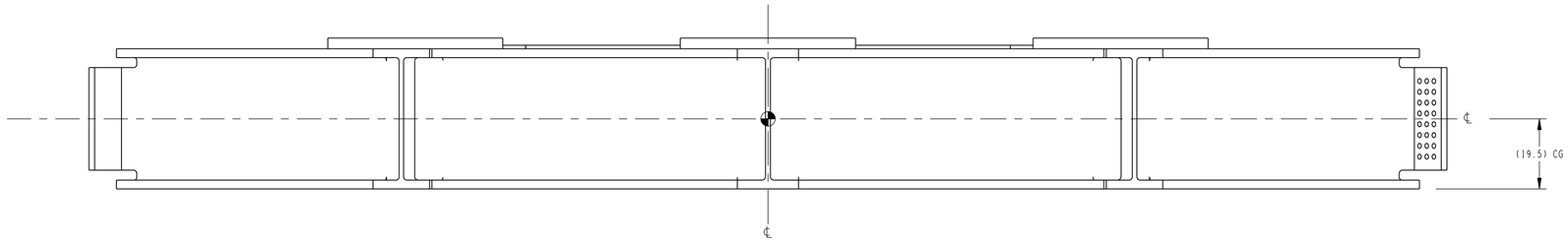

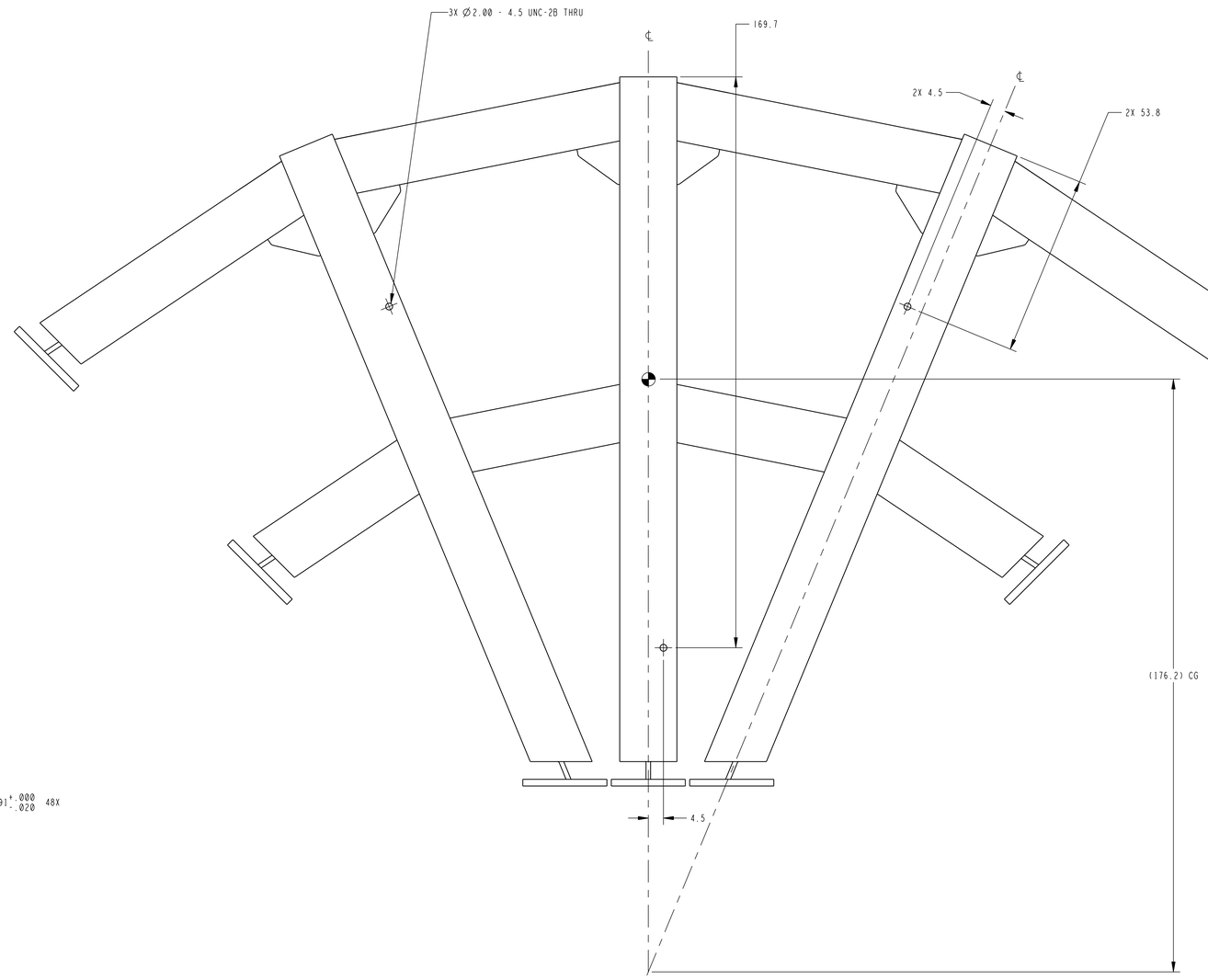

FIND NO. 1 LIFTING DETAILS

SCALE 1/16

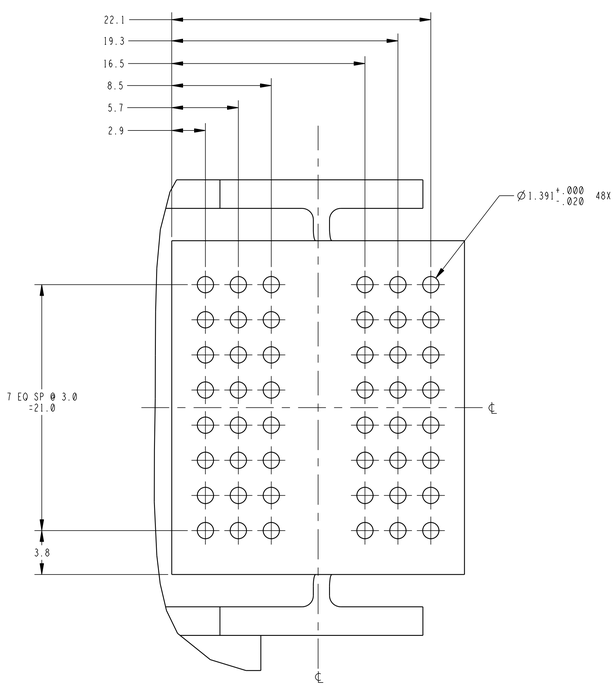

VIEW J - J SEE SHEET 3
2X
SCALE 1/5

- PRELIMINARY -
THIS DRAWING HAS NOT COMPLETED THE REVIEW PROCESS AND IS SUBJECT TO CHANGE.
07-15-14
DATE

UPPER SPIDER QUADRANT WELDMENT SLS ENGINE SECTION TEST	SPECIAL TEST EQUIPMENT DESIGN BRANCH - ET50 GEORGE C. MARSHALL SPACE FLIGHT CENTER NATIONAL AERONAUTICS AND SPACE ADMINISTRATION HUNTSVILLE, ALABAMA
	90M14149 — REVISION SEE SHT1
	DWNG SIZE E — SHEET 4 OF 4

NOTICE - WHEN GOVERNMENT DRAWINGS, SPECIFICATIONS, OR OTHER DATA ARE USED FOR ANY PURPOSE OTHER THAN IN CONNECTION WITH A DEFINITELY RELATED GOVERNMENT PROCUREMENT OPERATION, THE UNITED STATES GOVERNMENT THEREBY INCURS NO RESPONSIBILITY NOR ANY OBLIGATION WHATSOEVER; AND THE FACT THAT THE GOVERNMENT MAY HAVE FORMULATED, FURNISHED, OR IN ANY WAY SUPPLIED THE SAID DRAWINGS, SPECIFICATIONS OR OTHER DATA IS NOT TO BE REGARDED BY IMPLICATION OR OTHERWISE AS IN ANY MANNER LICENSING THE HOLDER OR ANY OTHER PERSON OR CORPORATION, OR CONVEYING ANY RIGHTS OR PERMISSION TO MANUFACTURE, USE, OR SELL ANY PATENTED INVENTION THAT MAY IN ANY WAY BE RELATED THERETO.

REVISIONS			
SYM	DESCRIPTION	DATE	APPROVAL

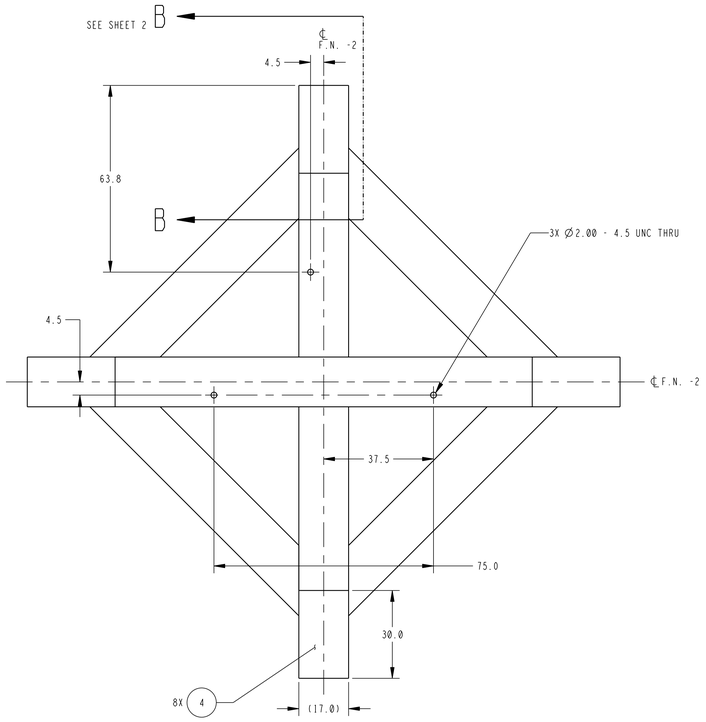

UNLESS OTHERWISE SPECIFIED:

1. REMOVE ALL BURRS AND BREAK ALL SHARP EDGES.
2. 125 ALL MACHINED SURFACES. 500 ALL EDGES OF CUT PLATES AND ENDS OF AISC SHAPES.
3. DIMENSIONING AND TOLERANCING IN ACCORDANCE WITH ASME Y14.5-1994.
4. STENCIL PART NUMBER IN THE APPROXIMATE LOCATION SHOWN USING A CONTRASTING COLOR AND 2" TALL LETTERS. STENCIL PART NUMBER TO BE COMPLETED AFTER PAINTING PER DRAWING 90M14391.
5. STEEL WELDING DESIGN, PROCEDURES, AND NON-DESTRUCTIVE EVALUATION SHALL BE PER ANSI/AWS D1.1/D1.1M, "STRUCTURAL WELDING CODE-STEEL" AND CURRENT AS OF THE RELEASE DATE OF THIS DRAWING. UTILIZE WELDING PRACTICES AND TECHNIQUES TO MINIMIZE DISTORTION. UNLESS OTHERWISE SPECIFIED, WELDS SHALL BE 100% VISUALLY INSPECTED.
6. COPED JOINTS AND WELD ACCESS HOLES SHALL BE PER THE EDITION OF ANSI/AWS D1.1/D1.1M "STRUCTURAL WELDING CODE-STEEL" THAT IS CURRENT AT THE RELEASE DATE OF THIS DRAWING. NOTE THAT REQUIRED WELD ACCESS HOLES HAVE NOT BEEN SHOWN AT THE DETAIL LEVEL IN THIS DRAWING.
7. AFTER WELDING AND PRIOR TO FINAL MACHINING, STRESS RELIEVE PER AWS D1.1, "STRUCTURAL WELDING CODE, STEEL", AND CURRENT AS OF THE RELEASE DATE OF THIS DRAWING.
8. ALL STRUCTURAL STEEL SHAPES SHALL CONFORM TO THE DESIGNATIONS AND DIMENSIONS OF THE AISC "STEEL CONSTRUCTION MANUAL", 14TH EDITION.

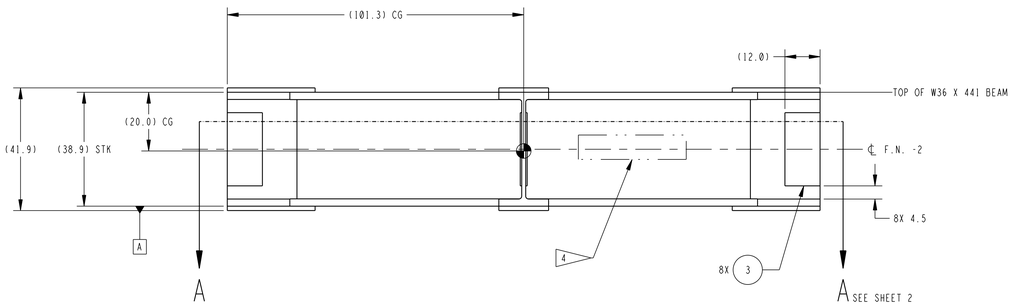

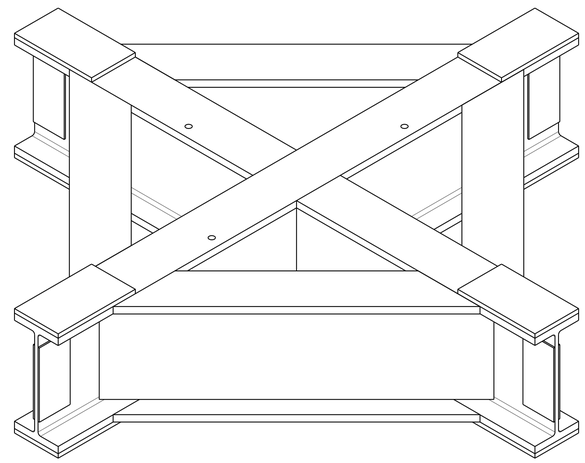

VISUAL REFERENCE ONLY
NO SCALE

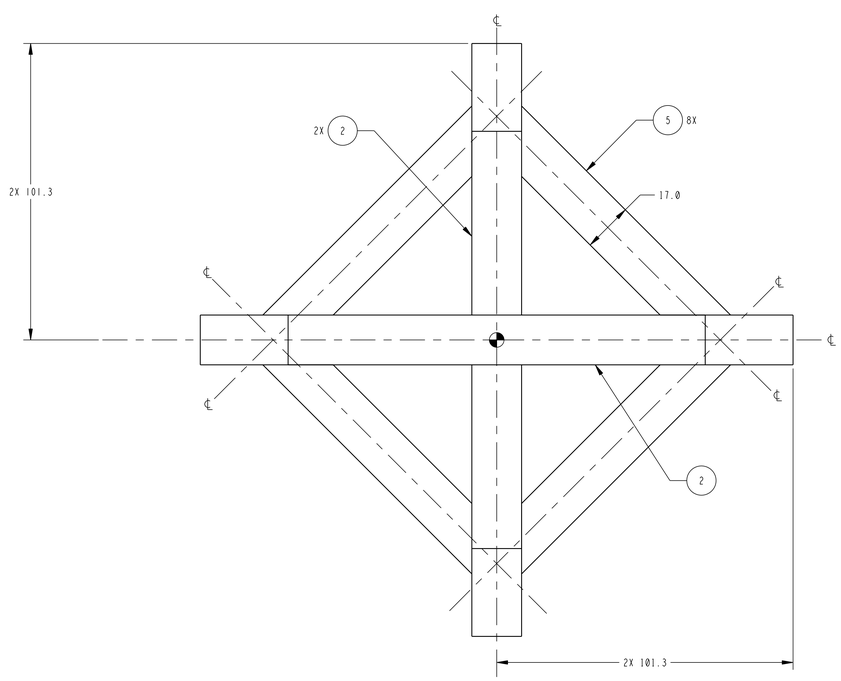

FIND NO. 1

ESTIMATED WEIGHT = 35,300 LBS.
SCALE 1/20

- PRELIMINARY -
THIS DRAWING HAS NOT COMPLETED THE REVIEW PROCESS AND IS SUBJECT TO CHANGE.
07-15-14
DATE

FIND NO.	CALLOUT SHT NO.	DETAIL SHT NO.	TOT REQ'D		PART NO.	DESCRIPTION	VEND NO.	REMARKS
5	1,2	-	AR	P	90M14150-5	2.5" STK. PLATE		MATERIAL: ASTM A572 GRADE 50
4	1	-	AR	P	90M14150-4	1.5" STK. PLATE		MATERIAL: ASTM A572 GRADE 50
3	1	-	8	F	90M14150-3	PLATE .50" THICK X 12.0" X 25.0"		MATERIAL: ASTM A572 GRADE 50
2	1	-	AR	P	90M14150-2	W36 X 441 WIDE FLANGE		MATERIAL: ASTM A992
1	-	-	-	F	90M14150-1	UPPER SPIDER CENTER SUPPORT WELDMENT SLS ENGINE SECTION TEST		

A:ASSEMBLY/INSTALLATION E:EXISTING F:FABRICATED ITEM M:MODIFIED ITEM P:PURCHASED ITEM

STRESS	DATE	PROGRAM MANAGER	DATE
MATERIALS	DATE	TEST ENGINEER/FREQUESTER	DATE
INDUSTRIAL SAFETY	DATE	ETS0 CONTRACTOR DESIGN LEAD	DATE
SAFETY AND MISSION ASSURANCE	DATE	ETS0 CIVIL SERVICE LEAD	DATE
BOEING TEST CONDUCTOR	DATE	CHECKER	DATE
PRESSURE CERTIFICATION MANAGER	DATE	ETS0 BRANCH CHIEF/TEAM LEAD	DATE

UNLESS OTHERWISE SPECIFIED TOLERANCES ARE

FRACTIONS	DECIMALS
$\pm \frac{1}{16}$ $\pm \frac{1°}{2}$	.X ± .06 .XX ± .03 .XXX ± .010 ∠ ± .50°

(DIMENSIONS ARE IN INCHES, DO NOT SCALE DRAWING)

DRAWN BY: A. HANNAH | NEXT ASSEMBLY: 90M13931 | DATE: 12-13-13

UPPER SPIDER CENTER SUPPORT WELDMENT SLS ENGINE SECTION TEST

SPECIAL TEST EQUIPMENT DESIGN BRANCH - ET50
GEORGE C. MARSHALL SPACE FLIGHT CENTER
NATIONAL AERONAUTICS AND SPACE ADMINISTRATION
HUNTSVILLE, ALABAMA

90M14150 REVISION ~

DWG SIZE E SHEET 1 OF 2

APPROVED FOR PUBLIC RELEASE; DISTRIBUTION IS UNLIMITED

NOTICE - WHEN GOVERNMENT DRAWINGS, SPECIFICATIONS, OR OTHER DATA ARE USED FOR ANY PURPOSE OTHER THAN IN CONNECTION WITH A DEFINITELY RELATED GOVERNMENT PROCUREMENT OPERATION, THE UNITED STATES GOVERNMENT THEREBY INCURS NO RESPONSIBILITY NOR ANY OBLIGATION WHATSOEVER, AND THE FACT THAT THE GOVERNMENT MAY HAVE FORMULATED, FURNISHED, OR IN ANY WAY SUPPLIED THE SAID DRAWINGS, SPECIFICATIONS OR OTHER DATA IS NOT TO BE REGARDED BY IMPLICATION OR OTHERWISE AS IN ANY MANNER LICENSING THE HOLDER OR ANY OTHER PERSON OR CORPORATION, OR CONVEYING ANY RIGHTS OR PERMISSION TO MANUFACTURE, USE, OR SELL ANY PATENTED INVENTION THAT MAY IN ANY WAY BE RELATED THERETO.

REVISIONS			
SYM	DESCRIPTION	DATE	APPROVAL

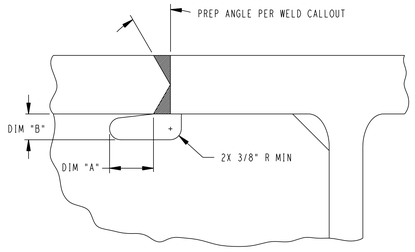

DIM "A" = 1.5 * WEB THICKNESS, BUT NOT LESS THAN 1-1/2"
DIM "B" = WEB THICKNESS, BUT NOT LESS THAN 3/4" NOR GREATER THAN 2"

WELD PREP DETAIL
SCALE: NONE

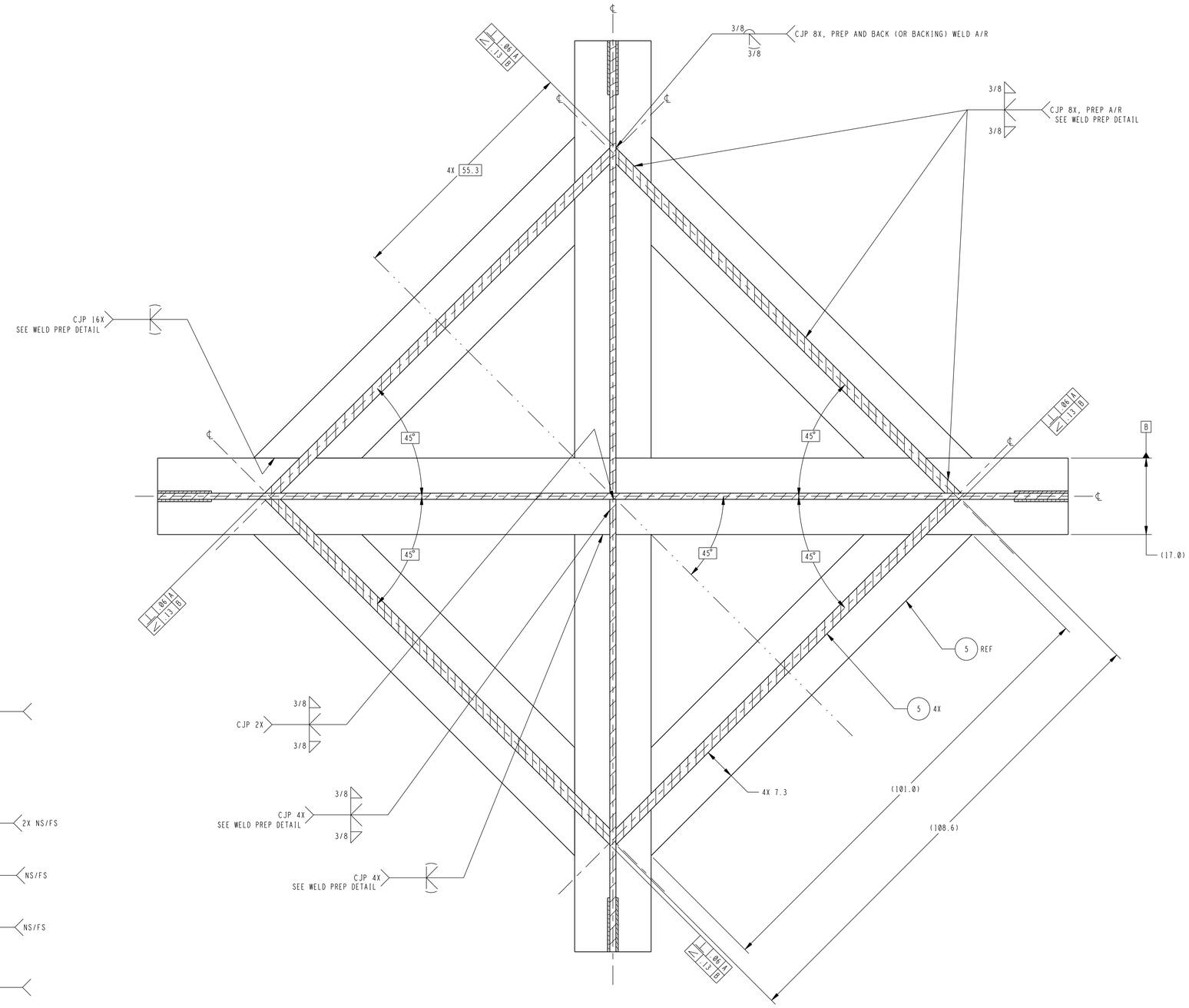

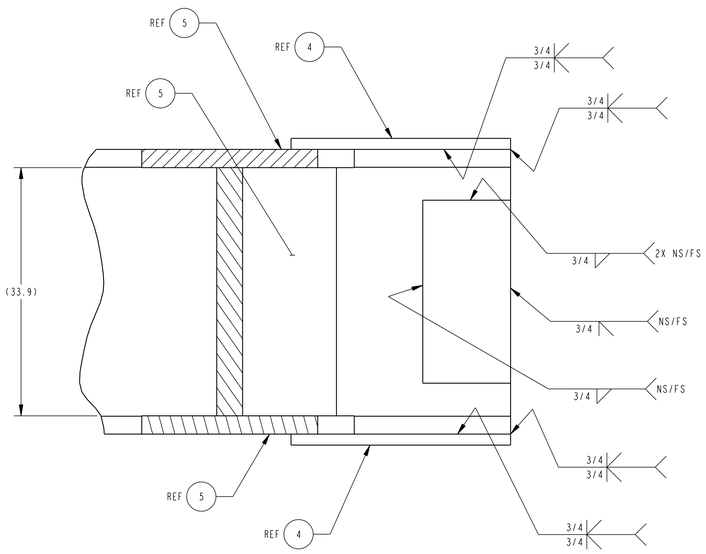

SECTION B-B
SEE SHEET 1
TYP 4 PLACES
SCALE 1/8

SECTION A-A
SEE SHEET 1
SCALE 1/10

- PRELIMINARY -
THIS DRAWING HAS NOT COMPLETED THE REVIEW PROCESS AND IS SUBJECT TO CHANGE.
07-15-14
DATE

APPROVED FOR PUBLIC RELEASE; DISTRIBUTION IS UNLIMITED

UPPER SPIDER CENTER SUPPORT WELDMENT SLS ENGINE SECTION TEST

SPECIAL TEST EQUIPMENT DESIGN BRANCH - EI50
GEORGE C. MARSHALL SPACE FLIGHT CENTER
NATIONAL AERONAUTICS AND SPACE ADMINISTRATION
HUNTSVILLE, ALABAMA

90M14150 REVISION SEE SHT1

DWG SIZE E SHEET 2 OF 2

NOTICE - WHEN GOVERNMENT DRAWINGS, SPECIFICATIONS, OR OTHER DATA ARE USED FOR ANY PURPOSE OTHER THAN IN CONNECTION WITH A DEFINITELY RELATED GOVERNMENT PROCUREMENT OPERATION, THE UNITED STATES GOVERNMENT THEREBY INCURS NO RESPONSIBILITY NOR ANY OBLIGATION WHATSOEVER; AND THE FACT THAT THE GOVERNMENT MAY HAVE FORMULATED, FURNISHED, OR IN ANY WAY SUPPLIED THE SAID DRAWINGS, SPECIFICATIONS OR OTHER DATA IS NOT TO BE REGARDED BY IMPLICATION OR OTHERWISE AS IN ANY MANNER LICENSING THE HOLDER OR ANY OTHER PERSON OR CORPORATION, OR CONVEYING ANY RIGHTS OR PERMISSION TO MANUFACTURE, USE, OR SELL ANY PATENTED INVENTION THAT MAY IN ANY WAY BE RELATED THERETO.

REVISIONS			
SYM	DESCRIPTION	DATE	APPROVAL

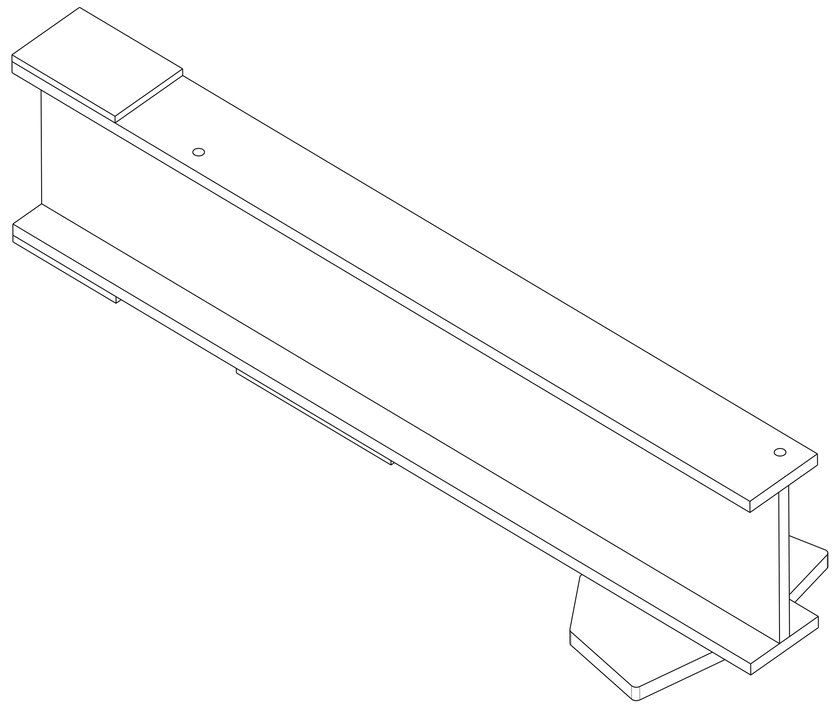

VISUAL REFERENCE ONLY
NO SCALE

UNLESS OTHERWISE SPECIFIED:

1. REMOVE ALL BURRS AND BREAK ALL SHARP EDGES.
2. 125 ALL MACHINED SURFACES.
   500 ALL EDGES OF CUT PLATES AND ENDS OF AISC SHAPES.
3. DIMENSIONING AND TOLERANCING IN ACCORDANCE WITH ASME Y14.5-1994.
4. STENCIL PART NUMBER IN THE APPROXIMATE LOCATION SHOWN USING A CONTRASTING COLOR AND 2" TALL LETTERS. STENCIL PART NUMBER TO BE COMPLETED AFTER PAINTING PER DRAWING 90M13931.
5. STEEL WELDING DESIGN, PROCEDURES, AND NON-DESTRUCTIVE EVALUATION SHALL BE PER ANSI/AWS D1.1/D1.1M, "STRUCTURAL WELDING CODE-STEEL" AND CURRENT AS OF THE RELEASE DATE OF THIS DRAWING. UTILIZE WELDING PRACTICES AND TECHNIQUES TO MINIMIZE DISTORTION. UNLESS OTHERWISE SPECIFIED, WELDS SHALL BE 100% VISUALLY INSPECTED.
6. AFTER WELDING AND PRIOR TO FINAL MACHINING, STRESS RELIEVE PER AWS D1.1, "STRUCTURAL WELDING CODE, STEEL", AND CURRENT AS OF THE RELEASE DATE OF THIS DRAWING.
7. ALL STRUCTURAL STEEL SHAPES SHALL CONFORM TO THE DESIGNATIONS AND DIMENSIONS OF THE AISC "STEEL CONSTRUCTION MANUAL", 14TH EDITION.

- PRELIMINARY -
THIS DRAWING HAS NOT COMPLETED THE REVIEW PROCESS AND IS SUBJECT TO CHANGE.
07-15-14
DATE

FIND NO.	CALLOUT SHT NO.	DETAIL SHT NO.	TOT. REQ'D		PART NO.	DESCRIPTION	VEND NO.	REMARKS
5	2	-	AR	P	90M14344-5	3.0" STK. PLATE		MATERIAL: ASTM A572 GRADE 50
4	2	-	AR	P	90M14344-4	1.5" STK. PLATE		MATERIAL: ASTM A572 GRADE 50
3	2	-	AR	P	90M14344-3	1.0" STK. PLATE		MATERIAL: ASTM A572 GRADE 50
2	2	-	AR	P	90M14344-2	2.5" STK. PLATE		MATERIAL: ASTM A572 GRADE 50
1	-	2	-	F	90M14344-1	UPPER SPIDER LATERAL SUPPORT BEAM WELDMENT SLS ENGINE SECTION TEST		

A:ASSEMBLY/INSTALLATION E:EXISTING F:FABRICATED ITEM M:MODIFIED ITEM P:PURCHASED ITEM

STRESS	DATE	PROGRAM MANAGER	DATE
MATERIALS	DATE	TEST ENGINEER/PROJECTOR	DATE
INDUSTRIAL SAFETY	DATE	ETS0 CONTRACTOR DESIGN LEAD	DATE
SAFETY AND MISSION ASSURANCE	DATE	ETS0 CIVIL SERVICE LEAD	DATE
BOEING TEST CONDUCTOR	DATE	CHECKER	DATE
PRESSURE CERTIFICATION MANAGER	DATE	ETS0 BRANCH CHIEF/TEAM LEAD	DATE

UNLESS OTHERWISE SPECIFIED TOLERANCES ARE

FRACTIONS: $\pm \frac{1}{16}$ $\pm \frac{1^\circ}{2}$

DECIMALS: .X- ± .06; .XX- ± .03; .XXX- ± .010; ∠- ± .50°

(DIMENSIONS ARE IN INCHES, DO NOT SCALE DRAWING)

DRAWN BY	NEXT ASSEMBLY	DATE
A. HANNAH	90M13931	12-12-13

UPPER SPIDER LATERAL SUPPORT BEAM WELDMENT SLS ENGINE SECTION TEST

SPECIAL TEST EQUIPMENT DESIGN BRANCH - ET50
GEORGE C. MARSHALL SPACE FLIGHT CENTER
NATIONAL AERONAUTICS AND SPACE ADMINISTRATION
HUNTSVILLE, ALABAMA

90M14344 REVISION ~

DWG SIZE E SHEET 1 OF 2

APPROVED FOR PUBLIC RELEASE; DISTRIBUTION IS UNLIMITED

NOTICE - WHEN GOVERNMENT DRAWINGS, SPECIFICATIONS, OR OTHER DATA ARE USED FOR ANY PURPOSE OTHER THAN IN CONNECTION WITH A DEFINITELY RELATED GOVERNMENT PROCUREMENT OPERATION, THE UNITED STATES GOVERNMENT THEREBY INCURS NO RESPONSIBILITY NOR ANY OBLIGATION WHATSOEVER; AND THE FACT THAT THE GOVERNMENT MAY HAVE FORMULATED, FURNISHED, OR IN ANY WAY SUPPLIED THE SAID DRAWINGS, SPECIFICATIONS OR OTHER DATA IS NOT TO BE REGARDED BY IMPLICATION OR OTHERWISE AS IN ANY MANNER LICENSING THE HOLDER OR ANY OTHER PERSON OR CORPORATION, OR CONVEYING ANY RIGHTS OR PERMISSION TO MANUFACTURE, USE, OR SELL ANY PATENTED INVENTION THAT MAY IN ANY WAY BE RELATED THERETO.

REVISIONS			
SYM	DESCRIPTION	DATE	APPROVAL

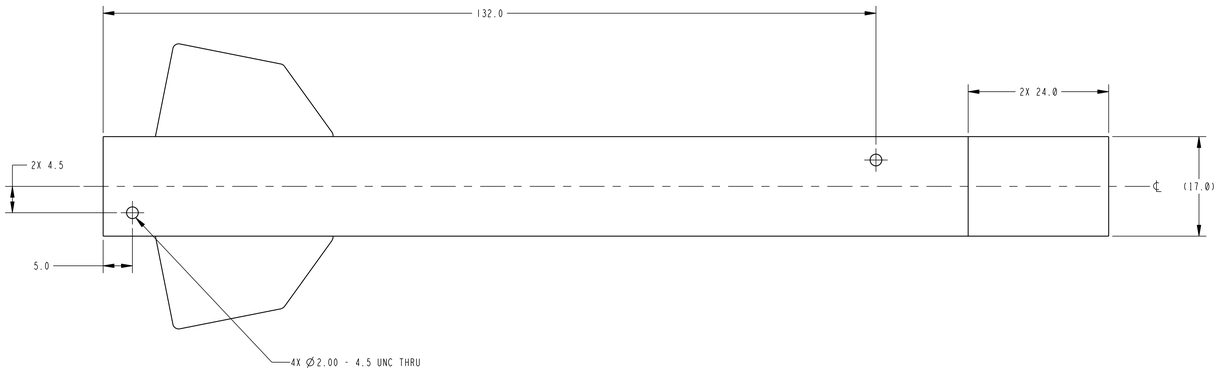

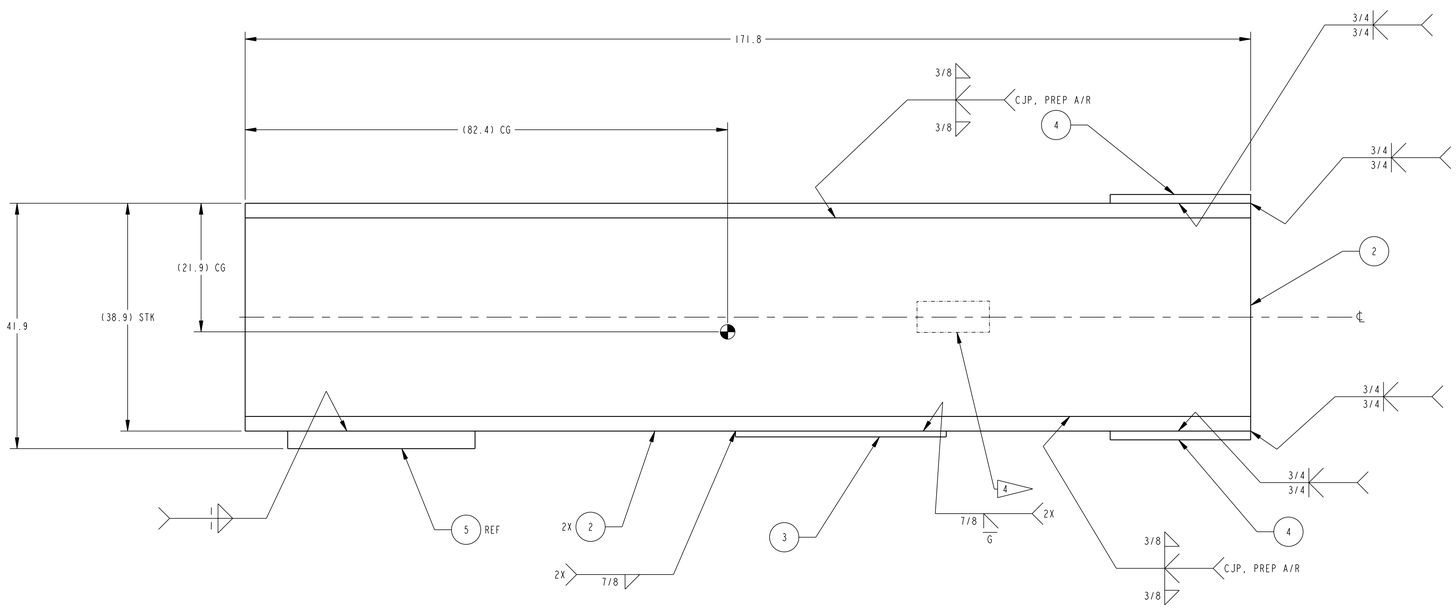

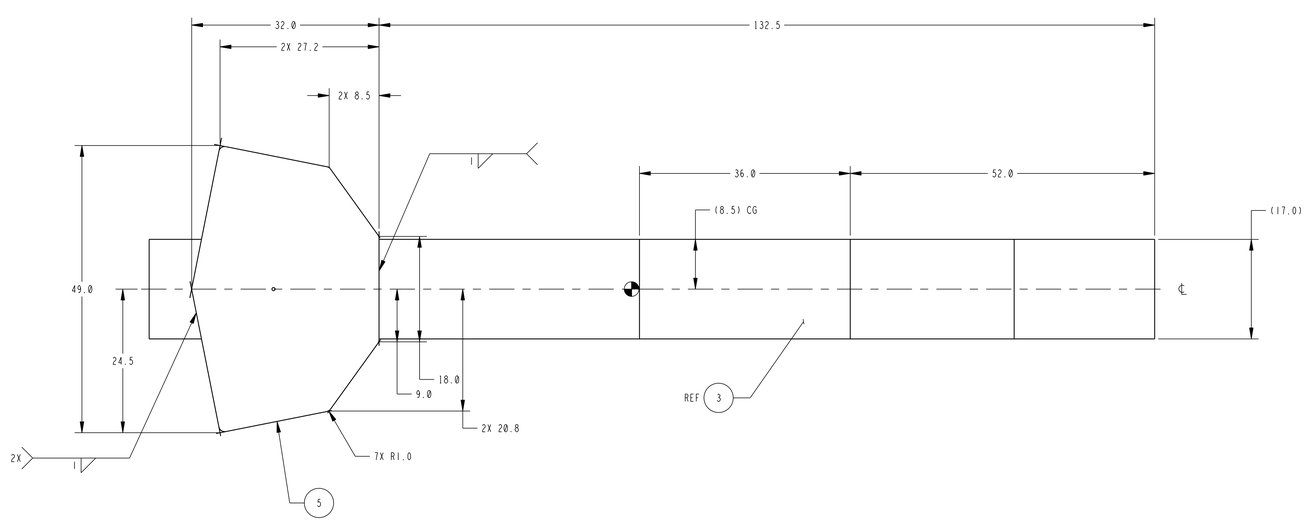

FIND NO. 1

ESTIMATED WEIGHT = 9,800 LBS.
SCALE 1/10

- PRELIMINARY -
THIS DRAWING HAS NOT COMPLETED THE REVIEW PROCESS AND IS SUBJECT TO CHANGE.
07-15-14
DATE

APPROVED FOR PUBLIC RELEASE; DISTRIBUTION IS UNLIMITED

UPPER SPIDER
LATERAL SUPPORT BEAM
WELDMENT
SLS ENGINE SECTION
TEST

SPECIAL TEST EQUIPMENT
DESIGN BRANCH - ET50
GEORGE C. MARSHALL
SPACE FLIGHT CENTER
NATIONAL AERONAUTICS
AND SPACE ADMINISTRATION
HUNTSVILLE, ALABAMA

90M14344 REVISION SEE SHT1

SIZE E SHEET 2 OF 2