NOTICE - WHEN GOVERNMENT DRAWINGS, SPECIFICATIONS, OR OTHER DATA ARE USED FOR ANY PURPOSE OTHER THAN IN CONNECTION WITH A DEFINITELY RELATED GOVERNMENT PROCUREMENT OPERATION, THE UNITED STATES GOVERNMENT THEREBY INCURS NO RESPONSIBILITY NOR ANY OBLIGATION WHATSOEVER; AND THE FACT THAT THE GOVERNMENT MAY HAVE FORMULATED, FURNISHED, OR IN ANY WAY SUPPLIED THE SAID DRAWINGS, SPECIFICATIONS OR OTHER DATA IS NOT TO BE REGARDED BY IMPLICATION OR OTHERWISE AS IN ANY MANNER LICENSING THE HOLDER OR ANY OTHER PERSON OR CORPORATION, OR CONVEYING ANY RIGHTS OR PERMISSION TO MANUFACTURE, USE, OR SELL ANY PATENTED INVENTION THAT MAY IN ANY WAY BE RELATED THERETO.

REVISIONS			
SYM	DESCRIPTION	DATE	APPROVAL

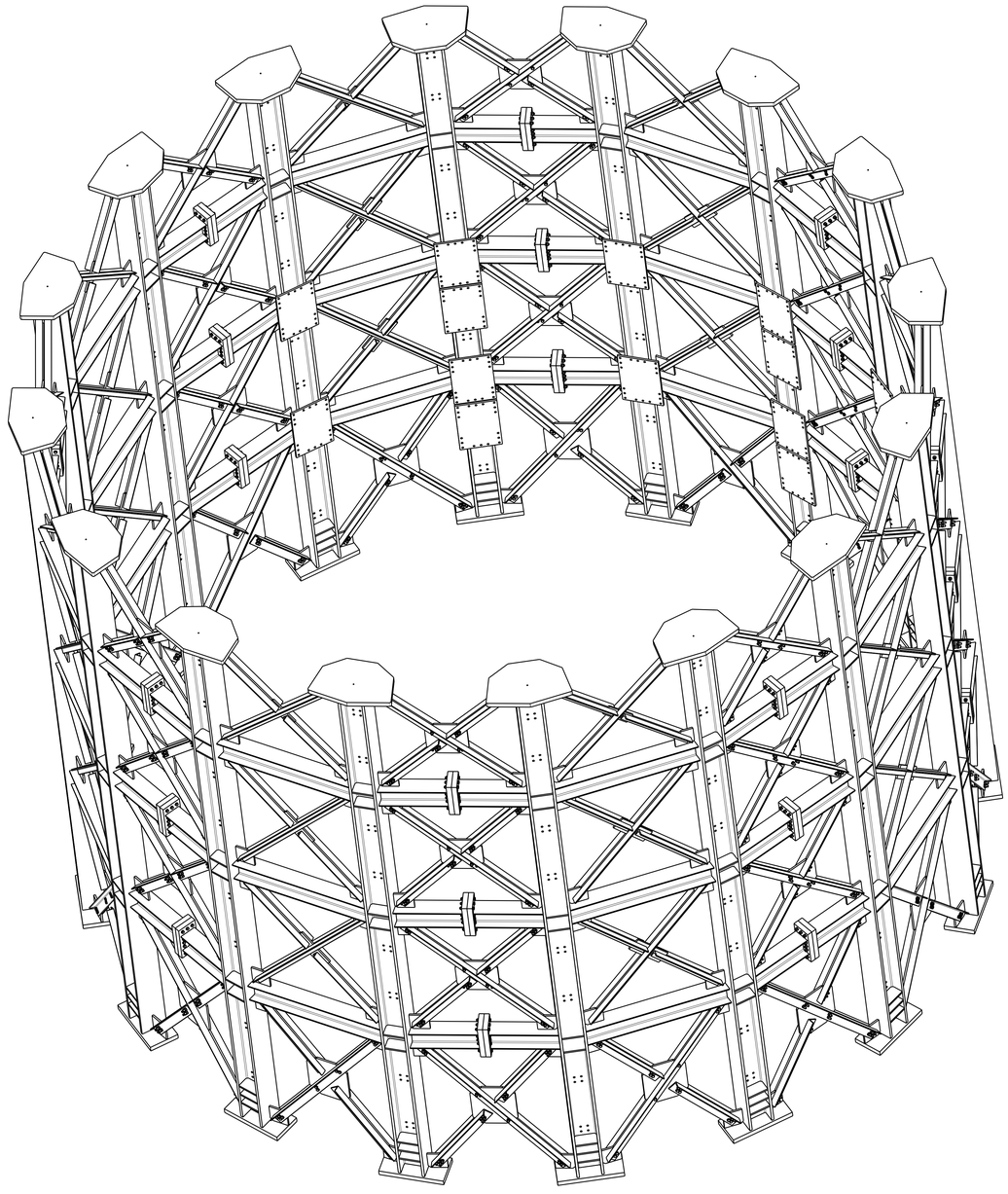

VISUAL REFERENCE ONLY
NO SCALE

UNLESS OTHERWISE SPECIFIED:

1. REMOVE ALL BURRS AND BREAK ALL SHARP EDGES.

2. 125 ALL MACHINED SURFACES.
   500 ALL EDGES OF CUT PLATES AND ENDS OF AISC SHAPES.

3. DIMENSIONING AND TOLERANCING IN ACCORDANCE WITH ASME Y14.5-1994.

4. PAINT ALL EXPOSED SURFACES USING EITHER OF THE FOLLOWING TWO FINISHES:

   1) MIL-STD-171F. PREPARE SURFACES PER 4.1 OR 4.4 AS NECESSARY; FINISH PER 5.2 AND 24.17.

   2) PREPARE SURFACES, ABRASIVE CLEANING WHERE NECESSARY, THEN POLYURETHANE PRIME AND TOP COAT USING SHERWIN WILLIAMS POLANE F63 (OR AN EQUIVALENT PRODUCT).

   FINISH COLOR OFF-WHITE OR LIGHT GRAY 17778 OR SIMILAR SHADE PER FED-STD-595C.

   DO NOT PAINT MACHINED AND JOINT INTERFACE LOCATIONS OR OTHER INDICATED SURFACES. DO NOT PAINT HOLES, THREADS, OR FASTENERS. AREAS DAMAGED DURING ASSEMBLY OR INSTALLATION SHALL BE TOUCHED UP AFTER DELIVERY USING BRUSH OR ROLLER ONLY. PROTECT UNPAINTED SURFACES WITH TRI-FLOW OR A SIMILAR PRODUCT DESIGNED TO PREVENT CORROSION.

5. ALIGN AND ASSEMBLE TO DIMENSIONS SHOWN. MATCH DRILL HOLES BY TRANSFERRING HOLE PATTERN FROM PART OR WELDMENT TO MATING COMPONENT(S).
   MATCH MARK (STEEL STAMPING) MATING PARTS USING 1.0" TALL CHARACTERS.
   MARK SHALL BE UNIQUE COMBINATION OF ALPHABET LETTERS AND/OR NUMBERS.
   EXAMPLE: A1, AB, ETC.

6. FOR 150 KSI UTS FASTENERS (INCLUDING SAE GRADE 8 AND ASTM A490) TORQUE PER MSFC-STD-486B TO THE FOLLOWING VALUES:

   1" DIA: 515-600 FT-LBS

7. PROVIDE FULL-CONTACT SHIMS BETWEEN MATING PARTS AS NEEDED.
   MATCH MARK SHIMS AND MATING PARTS FOR REASSEMBLY BY ETCHING SHIMS AND STEEL STAMPING WELDMENTS USING 1" TALL CHARACTERS. MARK SHALL BE UNIQUE COMBINATION OF ALPHABET LETTERS AND/OR NUMBERS.
   EXAMPLE: A1, AB, ETC.

- PRELIMINARY -
THIS DRAWING HAS NOT COMPLETED THE REVIEW PROCESS AND IS SUBJECT TO CHANGE.
07-14-14
DATE

FIND NO.	CALLOUT SHT NO.	DETAIL SHT NO.	TOT REQ'D		PART NO.	DESCRIPTION	VEND NO.	REMARKS
10	2	-	1184	P	90M13928-10	1-8UNC-2B HEX NUT, GR 8, ZINC PLATED		MATERIAL: ASTM SAE J429 GR8
9	2	-	2368	P	90M13928-9	1" SCREW SIZE, 2-1/2" OD, .13-.16" THK WASHER, ZINC PLATED		MATERIAL: ASTM SAE J429 GR8
8	2	-	288	P	90M13928-8	1-8UNC-2A HX HD CAP SCRW X 7.50 LG, GR 8, ZINC PLATED		MATERIAL: ASTM SAE J429 GR8
7	2	-	896	P	90M13928-7	1-8UNC-2A HX HD CAP SCRW X 4.25 LG, GR 8, ZINC PLATED		MATERIAL: ASTM SAE J429 GR8
6	2	-	AR	P	90M13928-6	1.0" STK PLATE		MATERIAL: ASTM A572 GRADE 50
5	2	-	AR	P	90M13928-5	ANGLE STK 4" X 6" X .50"		MATERIAL: ASTM A572 GRADE 50 (CROSS BRACING)
4	2	-	2	E	90M14349-1	PEDESTAL WELDMENT #3 SLS ENGINE SECTION TEST		
3	2	-	1	E	90M14348-1	PEDESTAL WELDMENT #2 SLS ENGINE SECTION TEST		
2	2	-	5	E	90M14347-1	PEDESTAL WELDMENT #1 SLS ENGINE SECTION TEST		
1	-	2	-	A	90M13928-1	PEDESTAL ASSEMBLY SLS ENGINE SECTION TEST		

A:ASSEMBLY/INSTALLATION E:EXISTING F:FABRICATED ITEM M:MODIFIED ITEM P:PURCHASED ITEM

STRESS	DATE	PROGRAM MANAGER	DATE
MATERIALS	DATE	TEST ENGINEER/REQUESTER	DATE
INDUSTRIAL SAFETY	DATE	ETS0 CONTRACTOR DESIGN LEAD	DATE
SAFETY AND MISSION ASSURANCE	DATE	ETS0 CIVIL SERVICE LEAD	DATE
BOEING TEST CONDUCTOR	DATE	CHECKER	DATE
PRESSURE CERTIFICATION MANAGER	DATE	ETS0 BRANCH CHIEF/TEAM LEAD	DATE

UNLESS OTHERWISE SPECIFIED
TOLERANCES ARE
FRACTIONS: $\pm \frac{1}{16}$ $\pm \frac{1^\circ}{2}$
DECIMALS: .X ± .06; .XX ± .03; .XXX ± .010; ∠ ± .50°
(DIMENSIONS ARE IN INCHES, DO NOT SCALE DRAWING)

DRAWN BY: D. BLEVINS | NEXT ASSEMBLY: 90M13930 | DATE: 04-03-14

PEDESTAL ASSEMBLY SLS ENGINE SECTION TEST

SPECIAL TEST EQUIPMENT DESIGN BRANCH - ET50
GEORGE C. MARSHALL SPACE FLIGHT CENTER
NATIONAL AERONAUTICS AND SPACE ADMINISTRATION
HUNTSVILLE, ALABAMA

90M13928 | REVISION ~

DWG SIZE E | SHEET 1 OF 2

APPROVED FOR PUBLIC RELEASE; DISTRIBUTION IS UNLIMITED

NOTICE - WHEN GOVERNMENT DRAWINGS, SPECIFICATIONS, OR OTHER DATA ARE USED FOR ANY PURPOSE OTHER THAN IN CONNECTION WITH A DEFINITELY RELATED GOVERNMENT PROCUREMENT OPERATION, THE UNITED STATES GOVERNMENT THEREBY INCURS NO RESPONSIBILITY NOR ANY OBLIGATION WHATSOEVER; AND THE FACT THAT THE GOVERNMENT MAY HAVE FORMULATED, FURNISHED, OR IN ANY WAY SUPPLIED THE SAID DRAWINGS, SPECIFICATIONS OR OTHER DATA IS NOT TO BE REGARDED BY IMPLICATION OR OTHERWISE AS IN ANY MANNER LICENSING THE HOLDER OR ANY OTHER PERSON OR CORPORATION, OR CONVEYING ANY RIGHTS OR PERMISSION TO MANUFACTURE, USE, OR SELL ANY PATENTED INVENTION THAT MAY IN ANY WAY BE RELATED THERETO.

REVISIONS			
SYM	DESCRIPTION	DATE	APPROVAL

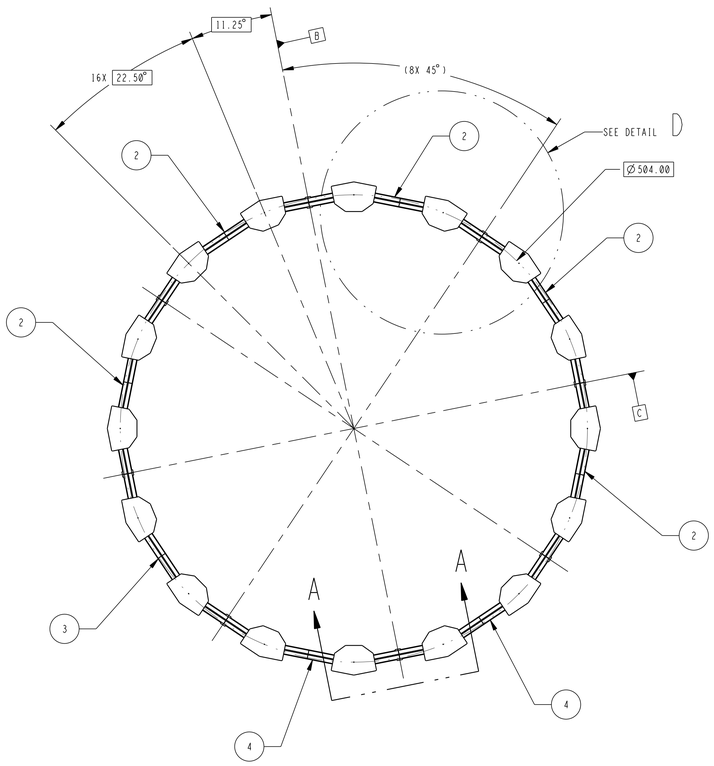

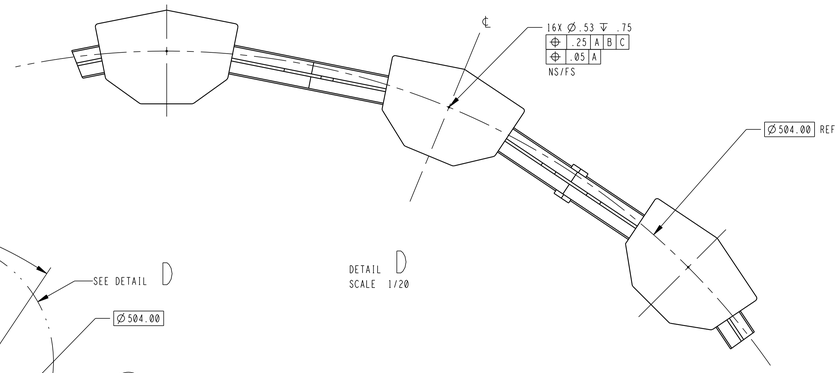

DETAIL D
SCALE 1/20

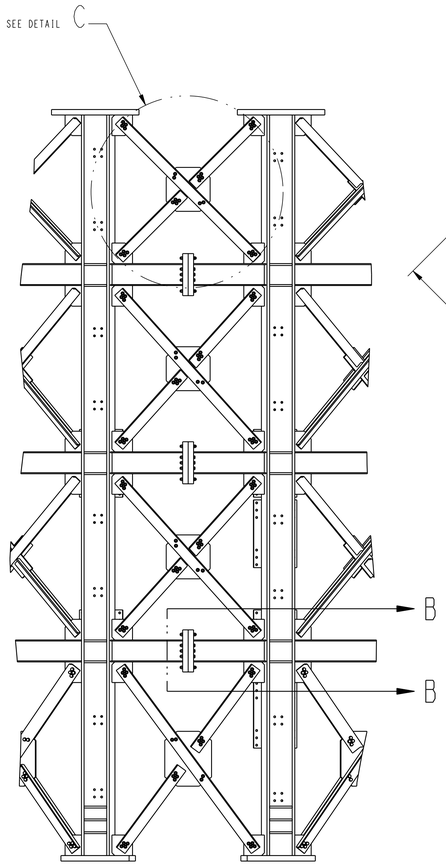

SECTION A - A
SCALE 1/32

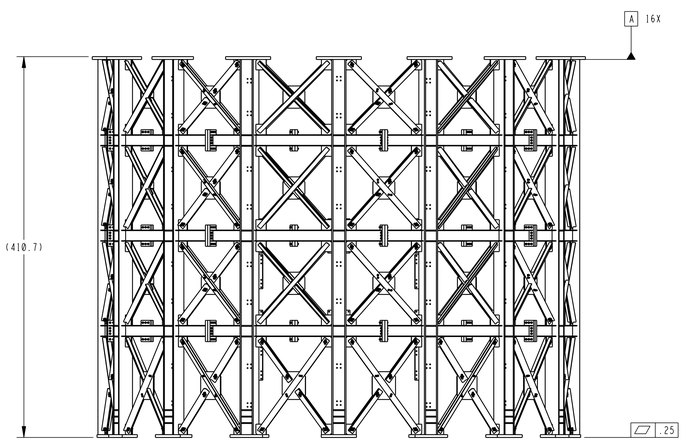

ASSEMBLY 1 4 7

ESTIMATED WEIGHT (INCLUDING FASTENERS) = 216,000 LBS.
SCALE 19/1200

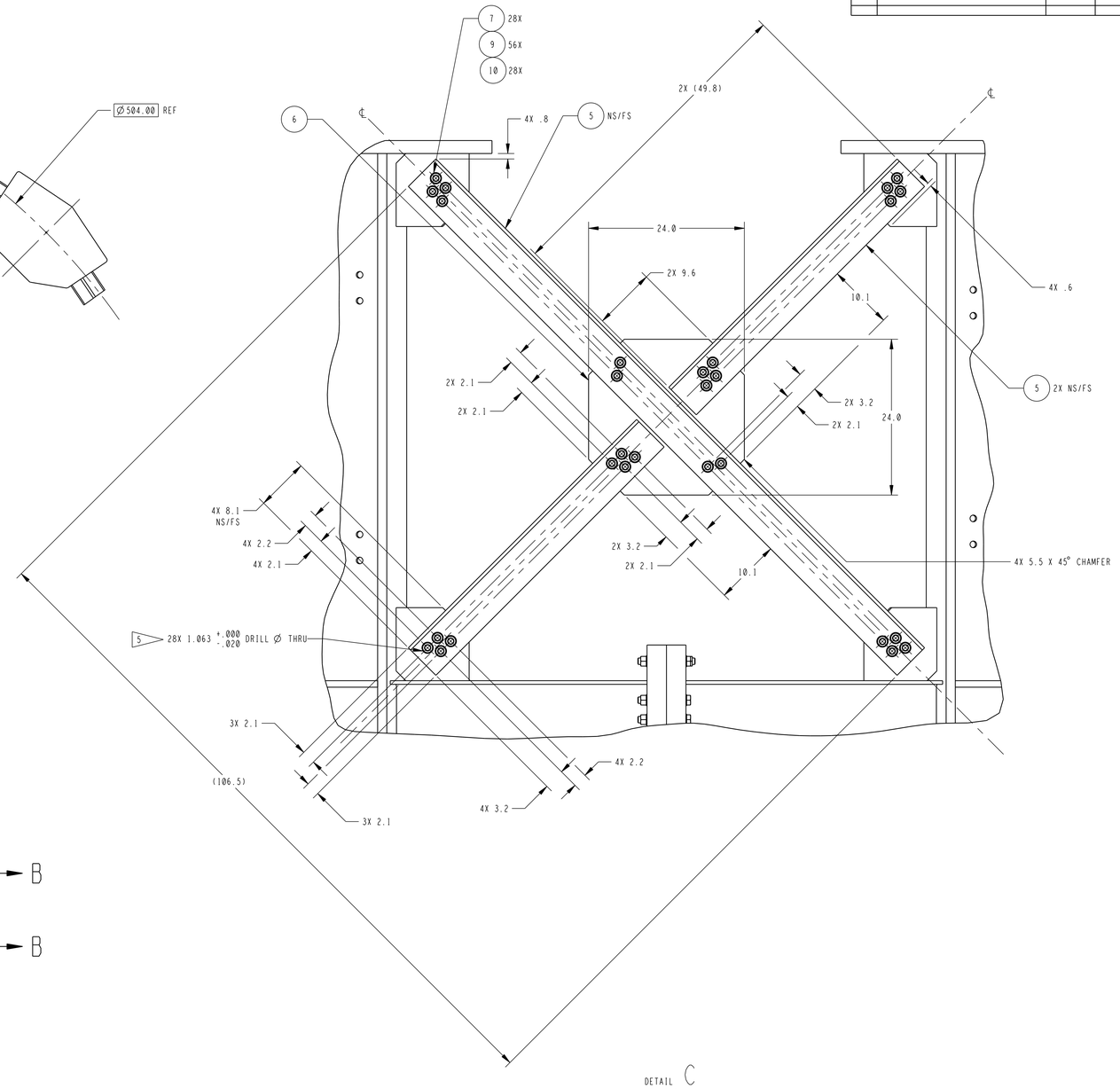

DETAIL C
8X SHOWN
24X SIMILAR
SCALE 1/8

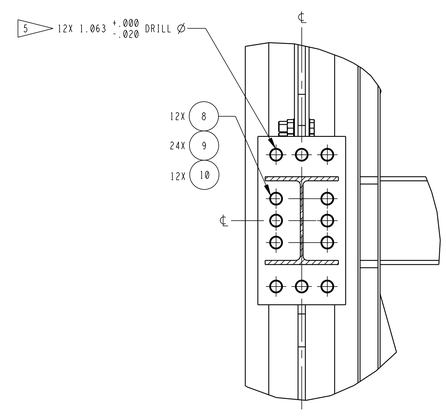

SECTION B - B
24X
SCALE 1/8

- PRELIMINARY -
THIS DRAWING HAS NOT COMPLETED THE REVIEW PROCESS AND IS SUBJECT TO CHANGE.
07-14-14
DATE

PEDESTAL ASSEMBLY SLS ENGINE SECTION TEST	SPECIAL TEST EQUIPMENT DESIGN BRANCH - ET50 GEORGE C. MARSHALL SPACE FLIGHT CENTER NATIONAL AERONAUTICS AND SPACE ADMINISTRATION HUNTSVILLE, ALABAMA
	90M13928 — REVISION SEE SHT1
	DWG SIZE E — SHEET 2 OF 2

NOTICE: WHEN GOVERNMENT DRAWINGS, SPECIFICATIONS, OR OTHER DATA ARE USED FOR ANY PURPOSE OTHER THAN IN CONNECTION WITH A DEFINITELY RELATED GOVERNMENT PROCUREMENT OPERATION, THE UNITED STATES GOVERNMENT THEREBY INCURS NO RESPONSIBILITY, NOR ANY OBLIGATION WHATSOEVER; AND THE FACT THAT THE GOVERNMENT MAY HAVE FORMULATED, FURNISHED, OR IN ANY WAY SUPPLIED THE SAID DRAWINGS, SPECIFICATIONS OR OTHER DATA IS NOT TO BE REGARDED BY IMPLICATION OR OTHERWISE AS IN ANY MANNER LICENSING THE HOLDER OR ANY OTHER PERSON OR CORPORATION, OR CONVEYING ANY RIGHTS OR PERMISSION TO MANUFACTURE, USE, OR SELL ANY PATENTED INVENTION THAT MAY IN ANY WAY BE RELATED THERETO.

REVISIONS			
SYM	DESCRIPTION	DATE	APPROVAL

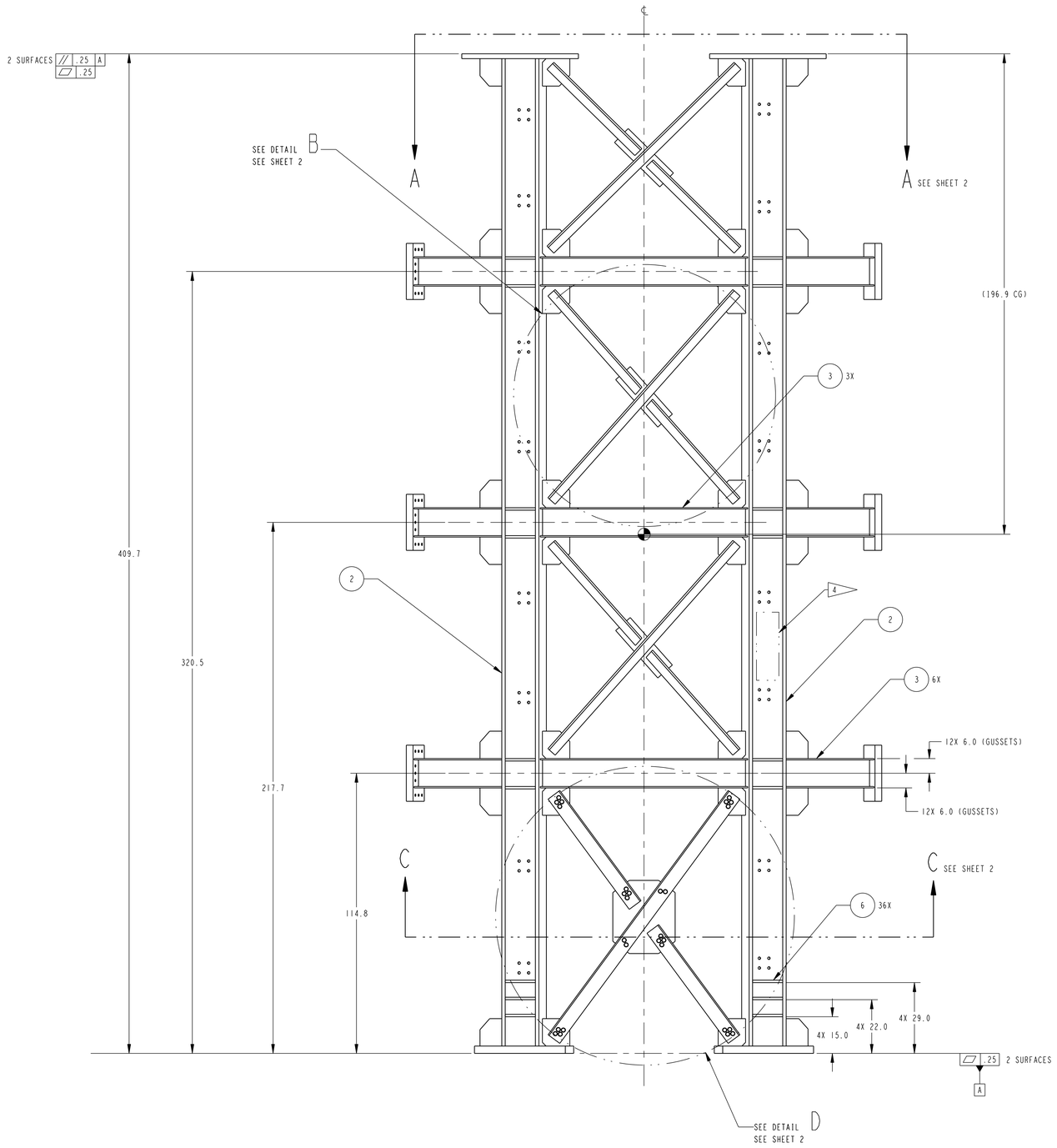

UNLESS OTHERWISE SPECIFIED:

1. REMOVE ALL BURRS AND BREAK ALL SHARP EDGES.
2. 125√ ALL MACHINED SURFACES.
   500√ ALL EDGES OF CUT PLATES AND ENDS OF AISC SHAPES.
3. DIMENSIONING AND TOLERANCING IN ACCORDANCE WITH ASME Y14.5-1994.
4. STENCIL PART NUMBER IN THE APPROXIMATE LOCATION SHOWN USING A CONTRASTING COLOR AND 2" TALL LETTERS. STENCIL PART NUMBER TO BE COMPLETED AFTER PAINTING PER DRAWING 90M13928.
5. COPED JOINTS AND WELD ACCESS HOLES SHALL BE PER THE EDITION OF ANSI/AWS D1.1/D1.1M "STRUCTURAL WELDING CODE-STEEL" THAT IS CURRENT AT THE RELEASE DATE OF THIS DRAWING. NOTE THAT REQUIRED WELD ACCESS HOLES HAVE NOT BEEN SHOWN AT THE DETAIL LEVEL IN THIS DRAWING.
6. ALL STRUCTURAL STEEL SHAPES SHALL CONFORM TO THE DESIGNATIONS AND DIMENSIONS OF THE AISC "STEEL CONSTRUCTION MANUAL", 14TH EDITION.
7. STEEL WELDING DESIGN, PROCEDURES, AND NON-DESTRUCTIVE EVALUATION SHALL BE PER ANSI/AWS D1.1/D1.1M. "STRUCTURAL WELDING CODE-STEEL" AND CURRENT AS OF THE RELEASE DATE OF THIS DRAWING. UTILIZE WELDING PRACTICES AND TECHNIQUES TO MINIMIZE DISTORTION. UNLESS OTHERWISE SPECIFIED, WELDS SHALL BE 100% VISUALLY INSPECTED.
8. AFTER WELDING AND PRIOR TO FINAL MACHINING, STRESS RELIEVE PER AWS D1.1, "STRUCTURAL WELDING CODE, STEEL", AND CURRENT AS OF THE RELEASE DATE OF THIS DRAWING.
9. DIMENSION DETERMINED BY DRAWING 90M13928.

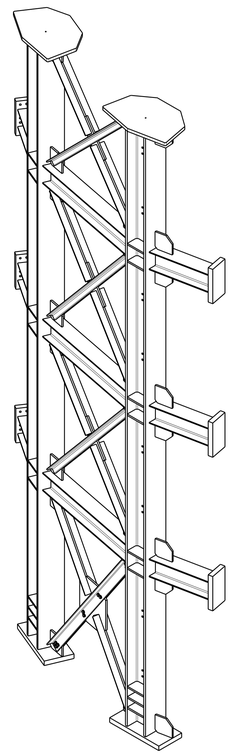

VISUAL REFERENCE ONLY
NO SCALE

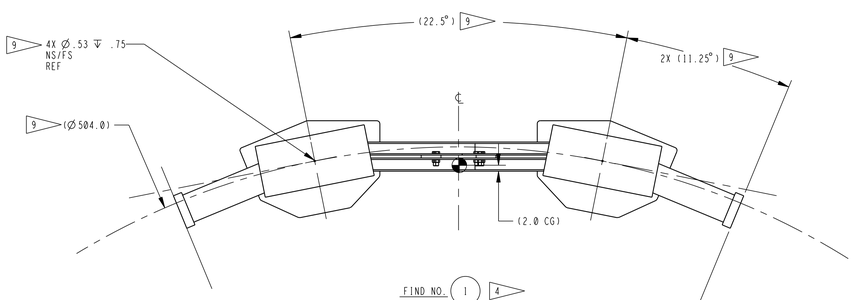

ESTIMATED WEIGHT (INCLUDING FASTENERS) = 23,270 LBS.
SCALE 1/20

- PRELIMINARY -
THIS DRAWING HAS NOT COMPLETED THE REVIEW PROCESS AND IS SUBJECT TO CHANGE.
07-14-14
DATE

FIND NO.	CALLOUT SHT NO.	DETAIL SHT NO.	TOT REQ'D		PART NO.	DESCRIPTION	VEND NO.	REMARKS
11	2	-	28	P	90M14347-11	1-8UNC HEAVY HEX NUT, ZINC FINISH		MATERIAL: ASTM A563, GRADE DH
10	2	-	56	P	90M14347-10	1" NOM DIA HIGH STRENGTH FLAT WASHER, ZINC FINISH		MATERIAL: ASTM F436
9	2	-	28	P	90M14347-9	1-8UNC HEAVY HEX BOLT X 4.25, ZINC FINISH		MATERIAL: ASTM A490
8	3	-	AR	P	90M14347-8	3.0" STK PLATE		MATERIAL: ASTM A572 GRADE 50
7	2,3	-	AR	P	90M14347-7	2.0" STK PLATE		MATERIAL: ASTM A572 GRADE 50
6	1,2,3	-	AR	P	90M14347-6	1.0" STK PLATE		MATERIAL: ASTM A572 GRADE 50
5	2	-	AR	P	90M14347-5	ANGLE STK 4" X 6" X .50"		MATERIAL: ASTM A572 GRADE 50 (CROSS BRACING)
4	2	-	AR	P	90M14347-4	ANGLE STK 4" X 4" X .50"		MATERIAL: ASTM A572 GRADE 50 (CROSS BRACING)
3	1	-	AR	P	90M14347-3	W12 X 53 WIDE FLANGE		MATERIAL: ASTM A992 STL
2	1	-	AR	P	90M14347-2	W14 X 193 WIDE FLANGE		MATERIAL: ASTM A992 STL
1	-	1	-	F	90M14347-1	PEDESTAL WELDMENT #1 SLS ENGINE SECTION TEST		

← A:ASSEMBLY/INSTALLATION E:EXISTING F:FABRICATED ITEM M:MODIFIED ITEM P:PURCHASED ITEM

STRESS	DATE	PROGRAM MANAGER	DATE
MATERIALS	DATE	TEST ENGINEER/RESIDENT	DATE
INDUSTRIAL SAFETY	DATE	ETS0 CONTRACTOR DESIGN LEAD	DATE
SAFETY AND MISSION ASSURANCE	DATE	ETS0 CIVIL SERVICE LEAD	DATE
BOEING TEST CONDUCTOR	DATE	CHECKER	DATE
PRESSURE CERTIFICATION MANAGER	DATE	ETS0 BRANCH CHIEF/TEAM LEAD	DATE

UNLESS OTHERWISE SPECIFIED
TOLERANCES ARE
FRACTIONS: ± 1/16 ± 1°/2
DECIMALS: .X- ± .06; .XX- ± .03; .XXX- ± .010; ∠- ± 50'
(DIMENSIONS ARE IN INCHES, DO NOT SCALE DRAWING)

DRAWN BY: D. BLEVINS | NEXT ASSEMBLY: 90M13928 | DATE: 03-19-14

PEDESTAL WELDMENT #1 SLS ENGINE SECTION TEST

SPECIAL TEST EQUIPMENT DESIGN BRANCH - ET50
GEORGE C. MARSHALL SPACE FLIGHT CENTER
NATIONAL AERONAUTICS AND SPACE ADMINISTRATION
HUNTSVILLE, ALABAMA

90M14347 REVISION ~

DRWG SIZE E | SHEET 1 OF 3

APPROVED FOR PUBLIC RELEASE; DISTRIBUTION IS UNLIMITED

NOTICE - WHEN GOVERNMENT DRAWINGS, SPECIFICATIONS, OR OTHER DATA ARE USED FOR ANY PURPOSE OTHER THAN IN CONNECTION WITH A DEFINITELY RELATED GOVERNMENT PROCUREMENT OPERATION, THE UNITED STATES GOVERNMENT THEREBY INCURS NO RESPONSIBILITY NOR ANY OBLIGATION WHATSOEVER; AND THE FACT THAT THE GOVERNMENT MAY HAVE FORMULATED, FURNISHED, OR IN ANY WAY SUPPLIED THE SAID DRAWINGS, SPECIFICATIONS OR OTHER DATA IS NOT TO BE REGARDED BY IMPLICATION OR OTHERWISE AS IN ANY MANNER LICENSING THE HOLDER OR ANY OTHER PERSON OR CORPORATION, OR CONVEYING ANY RIGHTS OR PERMISSION TO MANUFACTURE, USE, OR SELL ANY PATENTED INVENTION THAT MAY IN ANY WAY BE RELATED THERETO.

REVISIONS			
SYM	DESCRIPTION	DATE	APPROVAL

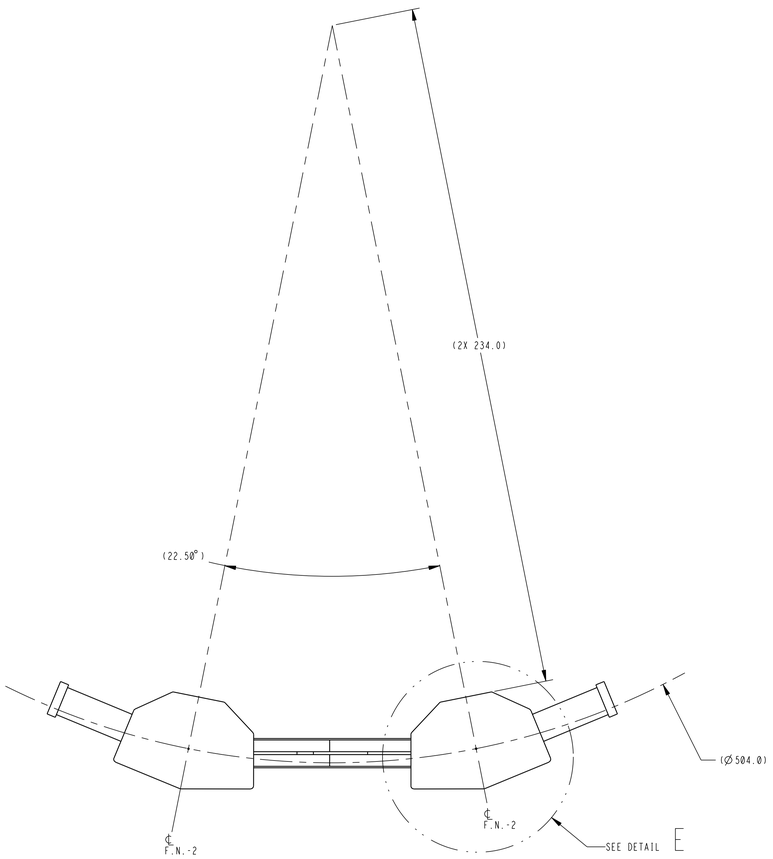

VIEW A-A
SEE SHEET 1

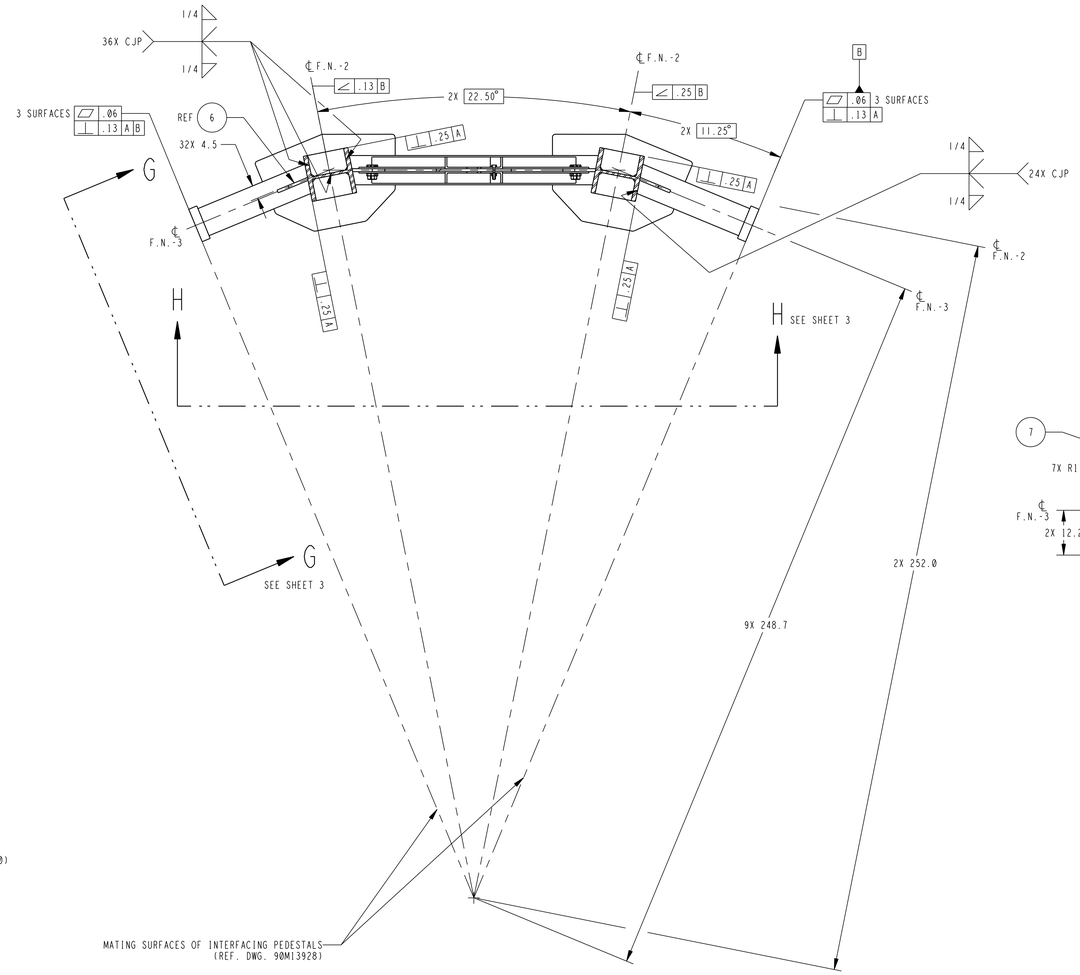

SECTION C-C
SEE SHEET 1

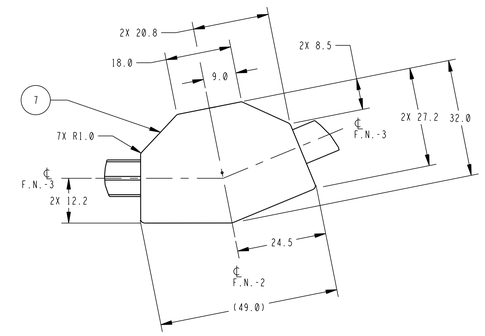

DETAIL E
2X
DIMENSIONS ARE TO CORNERS BEFORE ADDING RADII
SCALE 1/16

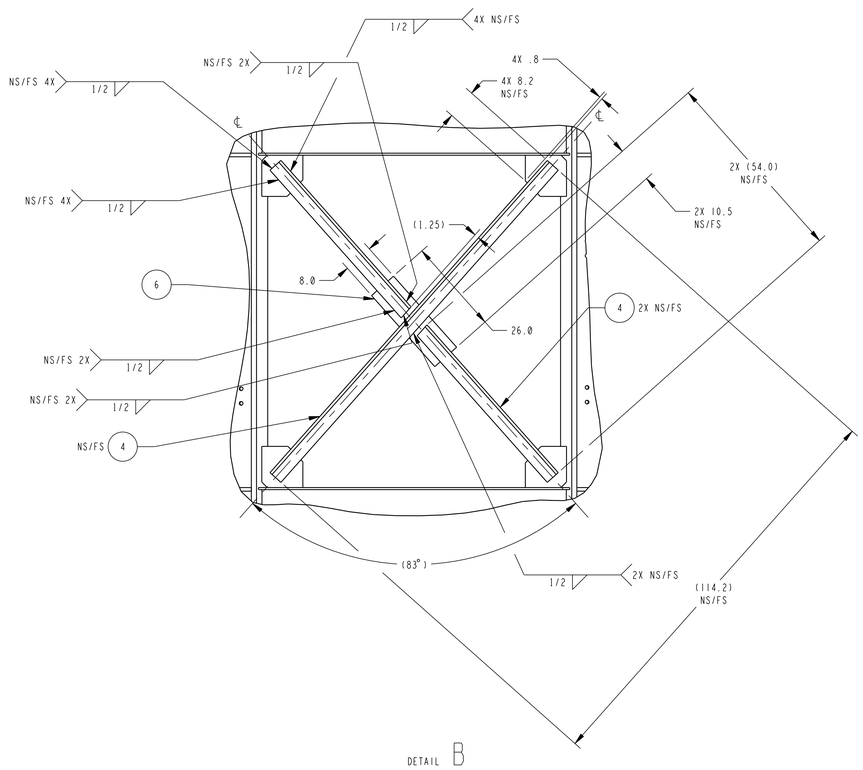

DETAIL B
3X
SEE SHEET 1
SCALE 1/16

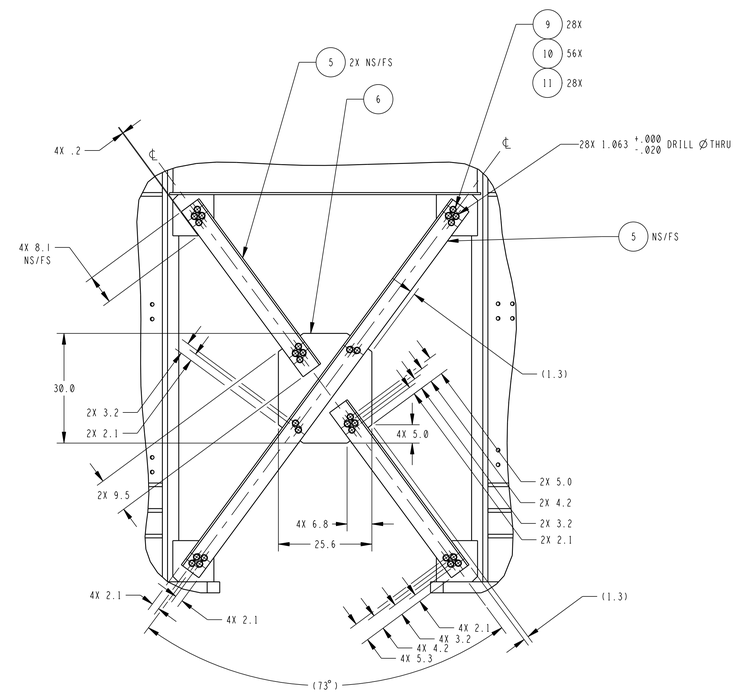

DETAIL D
SEE SHEET 1
SCALE 1/16

- PRELIMINARY -
THIS DRAWING HAS NOT COMPLETED THE REVIEW PROCESS AND IS SUBJECT TO CHANGE.
07-14-14
DATE

APPROVED FOR PUBLIC RELEASE; DISTRIBUTION IS UNLIMITED

PEDESTAL WELDMENT #1
SLS ENGINE
SECTION TEST

SPECIAL TEST EQUIPMENT
DESIGN BRANCH - ET50
GEORGE C. MARSHALL
SPACE FLIGHT CENTER
NATIONAL AERONAUTICS
AND SPACE ADMINISTRATION
HUNTSVILLE, ALABAMA

90M14347 | REVISION SEE SHT1

DWG SIZE E | SHEET 2 OF 3

NOTICE - WHEN GOVERNMENT DRAWINGS, SPECIFICATIONS, OR OTHER DATA ARE USED FOR ANY PURPOSE OTHER THAN IN CONNECTION WITH A DEFINITELY RELATED GOVERNMENT PROCUREMENT OPERATION, THE UNITED STATES GOVERNMENT THEREBY INCURS NO RESPONSIBILITY NOR OBLIGATION WHATSOEVER; AND THE FACT THAT THE GOVERNMENT MAY HAVE FORMULATED, FURNISHED, OR IN ANY WAY SUPPLIED THE SAID DRAWINGS, SPECIFICATIONS OR OTHER DATA IS NOT TO BE REGARDED BY IMPLICATION OR OTHERWISE AS IN ANY MANNER LICENSING THE HOLDER OR ANY OTHER PERSON OR CORPORATION, OR CONVEYING ANY RIGHTS OR PERMISSION TO MANUFACTURE, USE, OR SELL ANY PATENTED INVENTION THAT MAY IN ANY WAY BE RELATED THERETO.

REVISIONS			
SYM	DESCRIPTION	DATE	APPROVAL

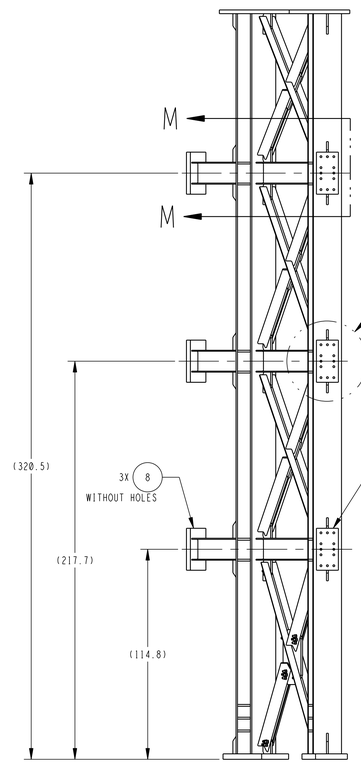

VIEW G-G
SEE SHEET 2
SCALE 1/32

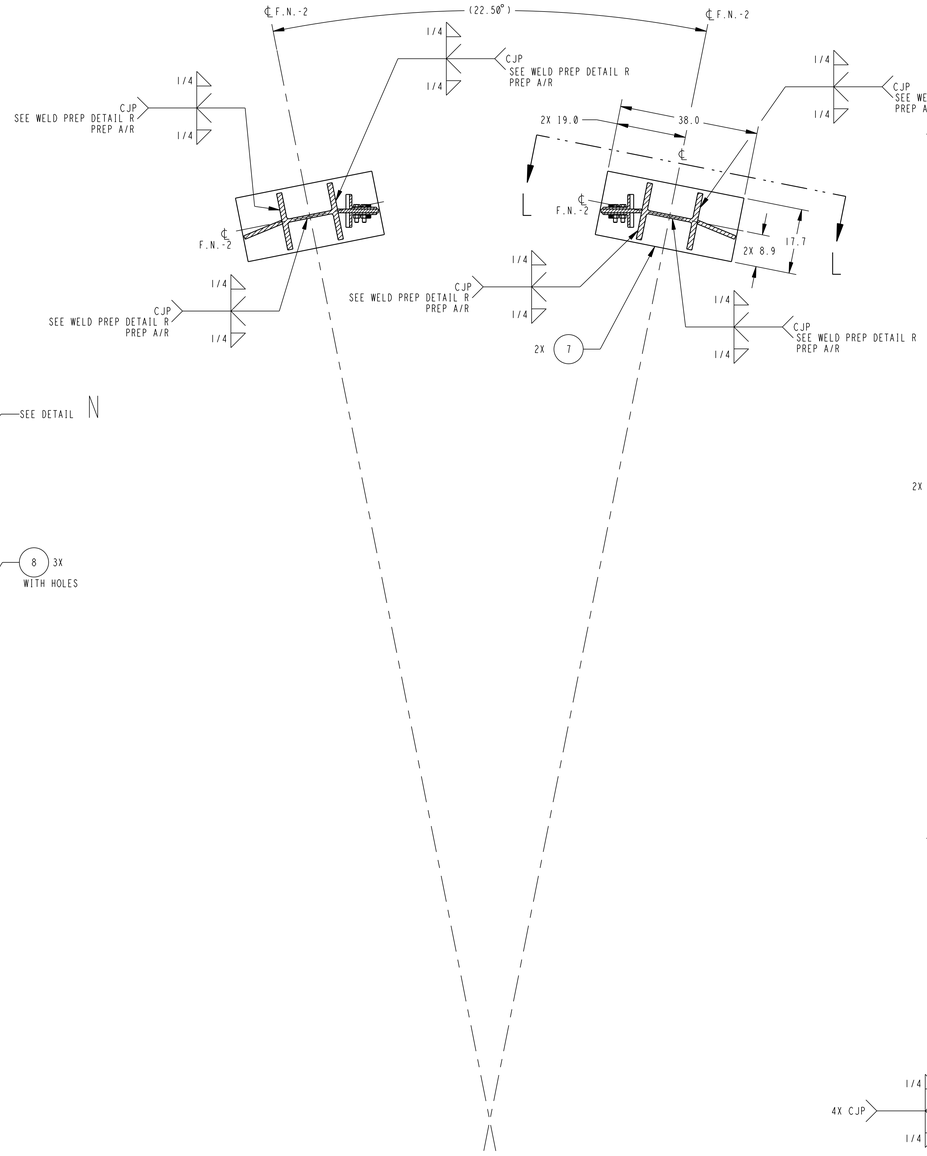

SECTION J-J
SCALE 1/16

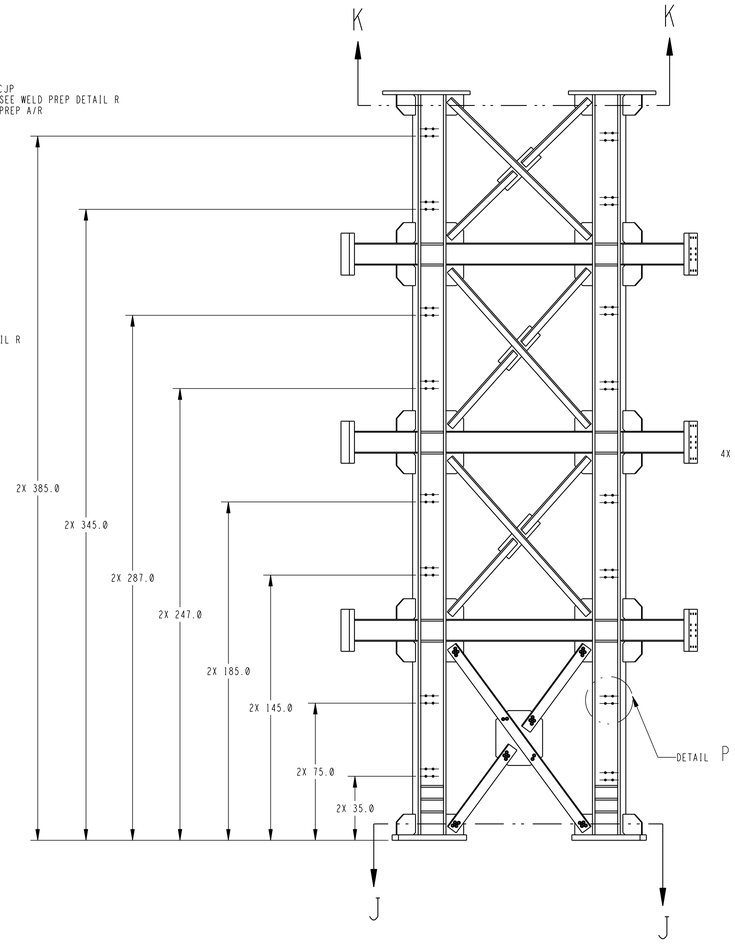

VIEW H-H
VIEW ROTATED 180° CW
SEE SHEET 2
SCALE 1/32

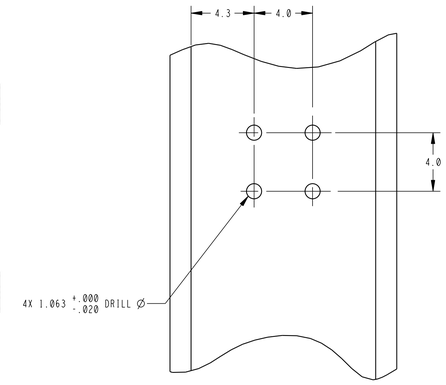

DETAIL P
16X
VIEW ALIGNED FOR CLARITY
SCALE 1/4

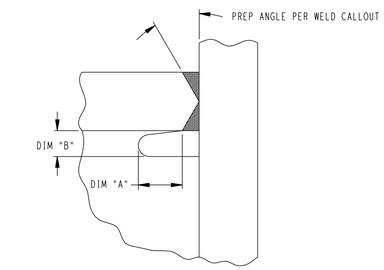

DIM "A" = 1.5 * WEB THICKNESS, BUT NOT LESS THAN 1-1/2"
DIM "B" = WEB THICKNESS, BUT NOT LESS THAN 3/4" NOR GREATER THAN 2"

WELD PREP DETAIL R

SCALE: NONE

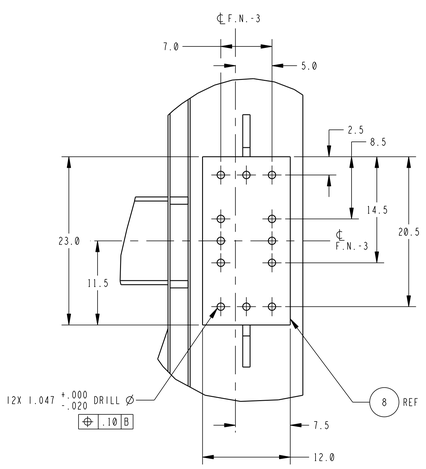

DETAIL N
3X
SCALE 1/8

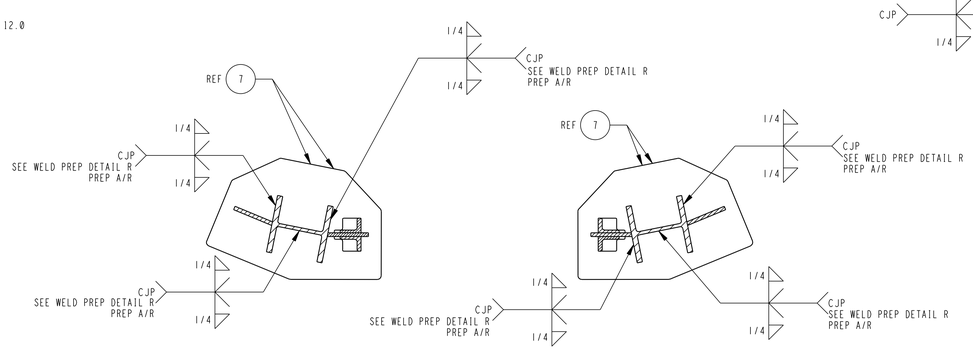

SECTION K-K
SCALE 1/16

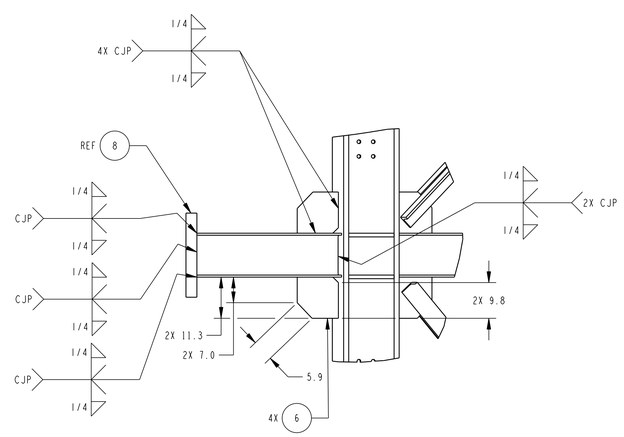

VIEW M-M
3X SHOWN
3X SIMILAR
SCALE 1/16

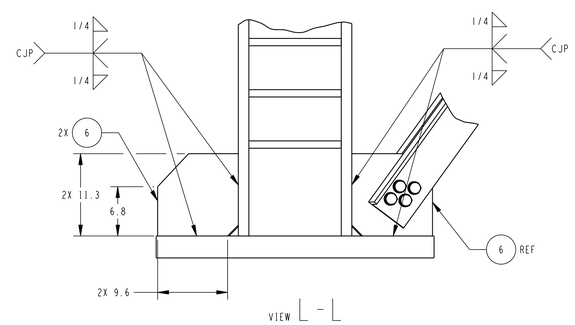

VIEW L-L
1X SHOWN
3X SIMILAR
SCALE 1/8

- PRELIMINARY -
THIS DRAWING HAS NOT COMPLETED THE REVIEW PROCESS AND IS SUBJECT TO CHANGE.
07-14-14
DATE

APPROVED FOR PUBLIC RELEASE; DISTRIBUTION IS UNLIMITED

PEDESTAL WELDMENT #1
SLS ENGINE
SECTION TEST

SPECIAL TEST EQUIPMENT DESIGN BRANCH - ET50
GEORGE C. MARSHALL SPACE FLIGHT CENTER
NATIONAL AERONAUTICS AND SPACE ADMINISTRATION
HUNTSVILLE, ALABAMA

90M14347 REVISION SEE SHT1

DRWG SIZE E SHEET 3 OF 3

NOTICE - WHEN GOVERNMENT DRAWINGS, SPECIFICATIONS, OR OTHER DATA ARE USED FOR ANY PURPOSE OTHER THAN IN CONNECTION WITH A DEFINITELY RELATED GOVERNMENT PROCUREMENT OPERATION, THE UNITED STATES GOVERNMENT THEREBY INCURS NO RESPONSIBILITY NOR ANY OBLIGATION WHATSOEVER; AND THE FACT THAT THE GOVERNMENT MAY HAVE FORMULATED, FURNISHED, OR IN ANY WAY SUPPLIED THE SAID DRAWINGS, SPECIFICATIONS OR OTHER DATA IS NOT TO BE REGARDED BY IMPLICATION OR OTHERWISE AS IN ANY MANNER LICENSING THE HOLDER OR ANY OTHER PERSON OR CORPORATION, OR CONVEYING ANY RIGHTS OR PERMISSION TO MANUFACTURE, USE, OR SELL ANY PATENTED INVENTION THAT MAY IN ANY WAY BE RELATED THERETO.

SYM	DESCRIPTION	DATE	APPROVAL

REVISIONS

UNLESS OTHERWISE SPECIFIED:

1. REMOVE ALL BURRS AND BREAK ALL SHARP EDGES.
2. 125 ALL MACHINED SURFACES.
   500 ALL EDGES OF CUT PLATES AND ENDS OF AISC SHAPES.
3. DIMENSIONING AND TOLERANCING IN ACCORDANCE WITH ASME Y14.5-1994.
4. STENCIL PART NUMBER IN THE APPROXIMATE LOCATION SHOWN USING A CONTRASTING COLOR AND 2" TALL LETTERS. STENCIL PART NUMBER TO BE COMPLETED AFTER PAINTING PER DRAWING 90M13928.
5. STEEL WELDING DESIGN, PROCEDURES, AND NON-DESTRUCTIVE EVALUATION SHALL BE PER ANSI/AWS D1.1/D1.1M, "STRUCTURAL WELDING CODE-STEEL" AND CURRENT AS OF THE RELEASE DATE OF THIS DRAWING. UTILIZE WELDING PRACTICES AND TECHNIQUES TO MINIMIZE DISTORTION. UNLESS OTHERWISE SPECIFIED, WELDS SHALL BE 100% VISUALLY INSPECTED.

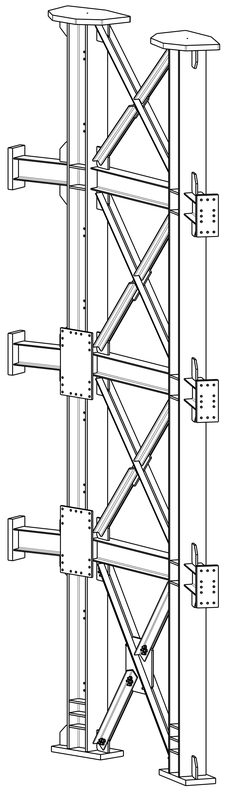

VISUAL REFERENCE ONLY
NO SCALE

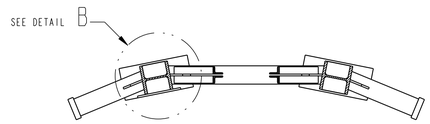

SECTION A-A

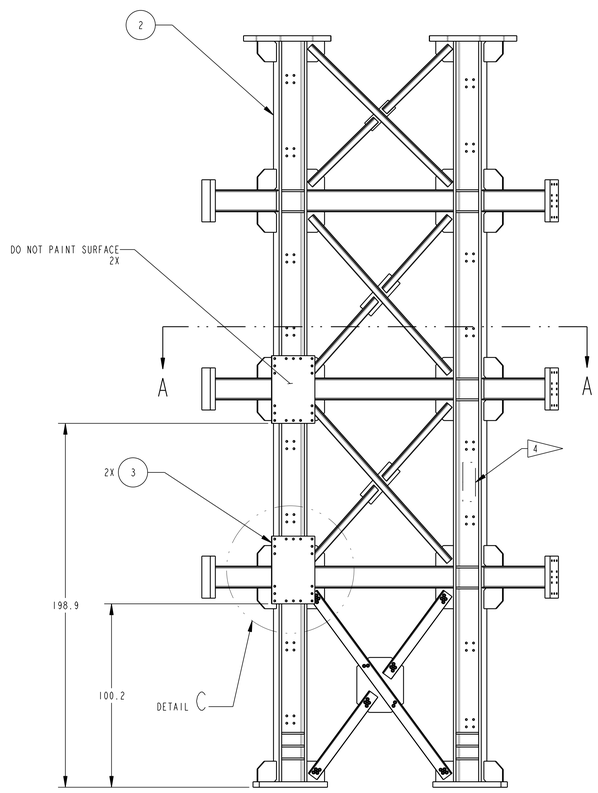

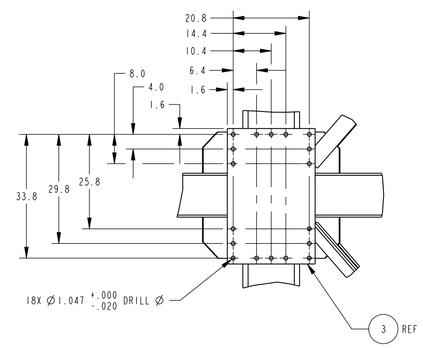

DETAIL C
2X
SCALE 0.063

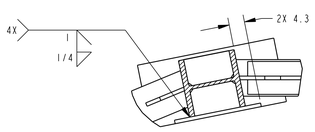

DETAIL B
SCALE 0.063

FIND NO. 1 4

ESTIMATED WEIGHT (INCLUDING FASTENERS) = 23,300 LBS.
SCALE 0.031

FIND NO.	CALLOUT SHT NO.	DETAIL SHT NO.	TOT REQ'D		PART NO.	DESCRIPTION	VEND NO.	REMARKS
3	1	-	2	F	90M14349-3	1.0" STK PLATE, 24" X 37"		MATERIAL: ASTM A572 GR50
2	1	-	1	E	90M14347-1	PEDESTAL WELDMENT #1 SLS ENGINE SECTION TEST		
1	-	-	-	M	90M14348-1	PEDESTAL WELDMENT #2 SLS ENGINE SECTION TEST		

A=ASSEMBLY/INSTALLATION E=EXISTING F=FABRICATED ITEM M=MODIFIED ITEM P=PURCHASED ITEM

STRESS	DATE	PROGRAM MANAGER	DATE
MATERIALS	DATE	TEST ENGINEER/REQUESTER	DATE
INDUSTRIAL SAFETY	DATE	ETS0 CONTRACTOR DESIGN LEAD	DATE
SAFETY AND MISSION ASSURANCE	DATE	ETS0 CIVIL SERVICE LEAD	DATE
BOEING TEST CONDUCTOR	DATE	CHECKER	DATE
PRESSURE CERTIFICATION MANAGER	DATE	ETS0 BRANCH CHIEF/TEAM LEAD	DATE

UNLESS OTHERWISE SPECIFIED
TOLERANCES ARE
FRACTIONS ± 1/16 ± 1/2°
DECIMALS .X ± .06 .XX ± .03 .XXX ± .010 ∠ ± .50°
(DIMENSIONS ARE IN INCHES, DO NOT SCALE DRAWING)

DRAWN BY D. BLEVINS | NEXT ASSEMBLY 90M13928 | DATE 01-22-14

PEDESTAL WELDMENT #2 SLS ENGINE SECTION TEST

SPECIAL TEST EQUIPMENT
DESIGN BRANCH - ET50
GEORGE C. MARSHALL SPACE FLIGHT CENTER
NATIONAL AERONAUTICS AND SPACE ADMINISTRATION
HUNTSVILLE, ALABAMA

90M14348 REVISION ~

DWG SIZE C SHEET 1 OF 1

- PRELIMINARY -
THIS DRAWING HAS NOT COMPLETED THE REVIEW PROCESS AND IS SUBJECT TO CHANGE.
07-14-14
DATE

APPROVED FOR PUBLIC RELEASE; DISTRIBUTION IS UNLIMITED

NOTICE - WHEN GOVERNMENT DRAWINGS, SPECIFICATIONS, OR OTHER DATA ARE USED FOR ANY PURPOSE OTHER THAN IN CONNECTION WITH A DEFINITELY RELATED GOVERNMENT PROCUREMENT OPERATION, THE UNITED STATES GOVERNMENT THEREBY INCURS NO RESPONSIBILITY NOR ANY OBLIGATION WHATSOEVER; AND THE FACT THAT THE GOVERNMENT MAY HAVE FORMULATED, FURNISHED, OR IN ANY WAY SUPPLIED THE SAID DRAWINGS, SPECIFICATIONS OR OTHER DATA IS NOT TO BE REGARDED BY IMPLICATION OR OTHERWISE AS IN ANY MANNER LICENSING THE HOLDER OR ANY OTHER PERSON OR CORPORATION, OR CONVEYING ANY RIGHTS OR PERMISSION TO MANUFACTURE, USE, OR SELL ANY PATENTED INVENTION THAT MAY IN ANY WAY BE RELATED THERETO.

REVISIONS

SYM	DESCRIPTION	DATE	APPROVAL

UNLESS OTHERWISE SPECIFIED:

1. REMOVE ALL BURRS AND BREAK ALL SHARP EDGES.
2. 125 ALL MACHINED SURFACES.
   500 ALL EDGES OF CUT PLATES AND ENDS OF AISC SHAPES.
3. DIMENSIONING AND TOLERANCING IN ACCORDANCE WITH ASME Y14.5-1994.
4. STENCIL PART NUMBER IN THE APPROXIMATE LOCATION SHOWN USING A CONTRASTING COLOR AND 2" TALL LETTERS. STENCIL PART NUMBER TO BE COMPLETED AFTER PAINTING PER DRAWING 90M13928.
5. STEEL WELDING DESIGN, PROCEDURES, AND NON-DESTRUCTIVE EVALUATION SHALL BE PER ANSI/AWS D1.1/D1.1M. "STRUCTURAL WELDING CODE-STEEL" AND CURRENT AS OF THE RELEASE DATE OF THIS DRAWING. UTILIZE WELDING PRACTICES AND TECHNIQUES TO MINIMIZE DISTORTION. UNLESS OTHERWISE SPECIFIED, WELDS SHALL BE 100% VISUALLY INSPECTED.

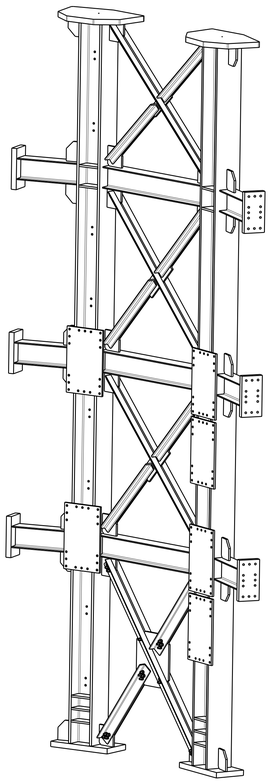

VISUAL REFERENCE ONLY
NO SCALE

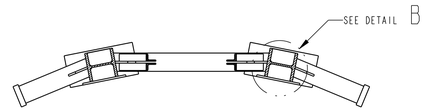

SECTION A-A

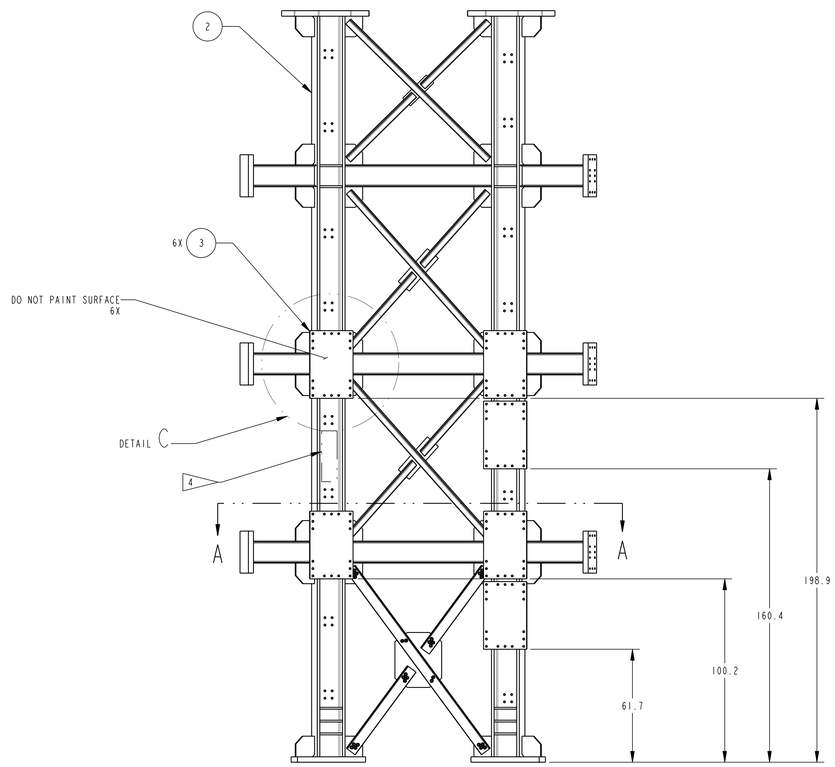

FIND NO. 1 4

ESTIMATED WEIGHT (INCLUDING FASTENERS) = 24,200 LBS.
SCALE 1/16

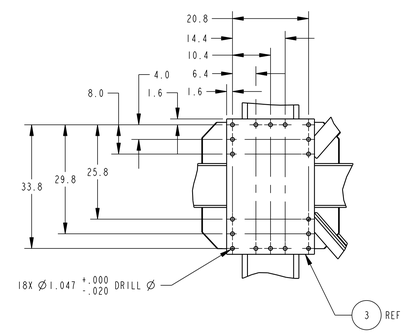

DETAIL C
2X AS SHOWN
4X SIMILAR
SCALE 1/16

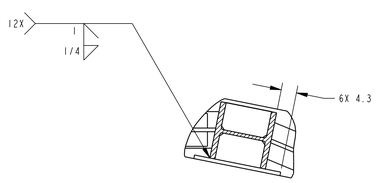

DETAIL B
SCALE 1/16

- PRELIMINARY -
THIS DRAWING HAS NOT COMPLETED THE REVIEW PROCESS AND IS SUBJECT TO CHANGE.
07-14-14
DATE

FIND NO.	CALLOUT SHT NO.	DETAIL SHT NO.	TOT REQ'D		PART NO.	DESCRIPTION	VEND NO.	REMARKS
3	1	-	6	F	90M14349-3	1.0" STK PLATE, 24" X 37"		MATERIAL: ASTM A572 GR50
2	1	-	1	E	90M14347-1	PEDESTAL WELDMENT #1 SLS ENGINE SECTION TEST		
1	-	-	-	M	90M14349-1	PEDESTAL WELDMENT #3 SLS ENGINE SECTION TEST		

A:ASSEMBLY/INSTALLATION E:EXISTING F:FABRICATED ITEM M:MODIFIED ITEM P:PURCHASED ITEM

STRESS	DATE	PROGRAM MANAGER	DATE
MATERIALS	DATE	TEST ENGINEER/REQUESTER	DATE
INDUSTRIAL SAFETY	DATE	ET50 CONTRACTOR DESIGN LEAD	DATE
SAFETY AND MISSION ASSURANCE	DATE	ET50 CIVIL SERVICE LEAD	DATE
BOEING TEST CONDUCTOR	DATE	CHECKER	DATE
PRESSURE CERTIFICATION MANAGER	DATE	ET50 BRANCH CHIEF/TEAM LEAD	DATE

UNLESS OTHERWISE SPECIFIED
TOLERANCES ARE

FRACTIONS	DECIMALS
± 1/16 ± 1/2	.X ± .06
	.XX ± .03
	.XXX ± .010
	∠ ± 30°

(DIMENSIONS ARE IN INCHES, DO NOT SCALE DRAWING)

DRAWN BY: D. BLEVINS
NEXT ASSEMBLY: 90M13928
DATE: 01-22-14

PEDESTAL WELDMENT #3 SLS ENGINE SECTION TEST

SPECIAL TEST EQUIPMENT DESIGN BRANCH - ET50
GEORGE C. MARSHALL SPACE FLIGHT CENTER
NATIONAL AERONAUTICS AND SPACE ADMINISTRATION
HUNTSVILLE, ALABAMA

90M14349 REVISION ~

DWG SIZE E SHEET 1 OF 1

APPROVED FOR PUBLIC RELEASE; DISTRIBUTION IS UNLIMITED

NOTICE - WHEN GOVERNMENT DRAWINGS, SPECIFICATIONS, OR OTHER DATA ARE USED FOR ANY PURPOSE OTHER THAN IN CONNECTION WITH A DEFINITELY RELATED GOVERNMENT PROCUREMENT OPERATION, THE UNITED STATES GOVERNMENT THEREBY INCURS NO RESPONSIBILITY NOR ANY OBLIGATION WHATSOEVER; AND THE FACT THAT THE GOVERNMENT MAY HAVE FORMULATED, FURNISHED, OR IN ANY WAY SUPPLIED THE SAID DRAWINGS, SPECIFICATIONS OR OTHER DATA IS NOT TO BE REGARDED BY IMPLICATION OR OTHERWISE AS IN ANY MANNER LICENSING THE HOLDER OR ANY OTHER PERSON OR CORPORATION, OR CONVEYING ANY RIGHTS OR PERMISSION TO MANUFACTURE, USE, OR SELL ANY PATENTED INVENTION THAT MAY IN ANY WAY BE RELATED THERETO.

REVISIONS			
SYM	DESCRIPTION	DATE	APPROVAL

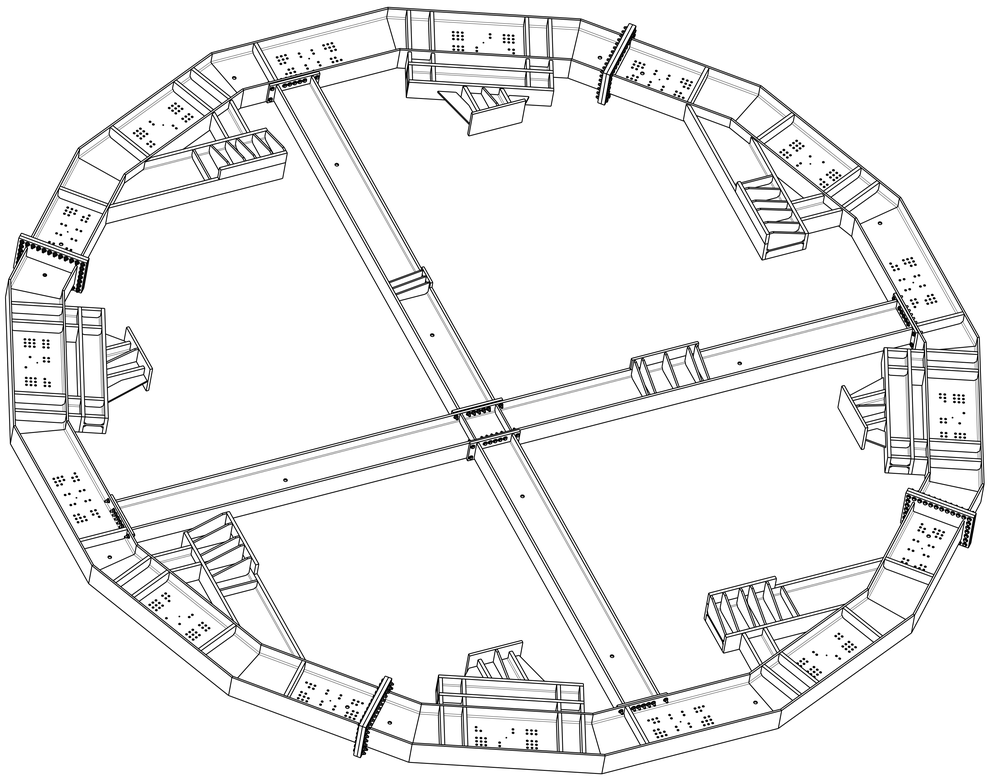

VISUAL REFERENCE ONLY
NO SCALE

UNLESS OTHERWISE SPECIFIED:

1. REMOVE ALL BURRS AND BREAK ALL SHARP EDGES.

2. 125 ALL MACHINED SURFACES.
   500 ALL EDGES OF CUT PLATES AND ENDS OF AISC SHAPES.

3. DIMENSIONING AND TOLERANCING IN ACCORDANCE WITH ASME Y14.5-1994.

4. PAINT ALL EXPOSED SURFACES USING EITHER OF THE FOLLOWING TWO FINISHES:

   1) MIL-STD-171F. PREPARE SURFACES PER 4.1 OR 4.4 AS NECESSARY; FINISH PER 5.2 AND 24.17.

   2) PREPARE SURFACES, ABRASIVE CLEANING WHERE NECESSARY, THEN POLYURETHANE PRIME AND TOP COAT USING SHERWIN WILLIAMS POLANE F63 (OR AN EQUIVALENT PRODUCT).

   FINISH COLOR BLUE NO.15102 OR SIMILAR SHADE PER FED-STD-595C.

   DO NOT PAINT MACHINED AND JOINT LOCATIONS OR OTHER INDICATED SURFACES. DO NOT PAINT HOLES, THREADS, SHIMS, OR FASTENERS. AREAS DAMAGED DURING ASSEMBLY OR INSTALLATION SHALL BE TOUCHED UP AFTER DELIVERY USING BRUSH OR ROLLER ONLY. PROTECT UNPAINTED SURFACES WITH TRI-FLOW OR A SIMILAR PRODUCT DESIGNED TO PREVENT CORROSION.

5. ALIGN AND ASSEMBLE TO DIMENSIONS SHOWN. MATCH DRILL HOLES BY TRANSFERRING HOLE PATTERN FROM PART OR WELDMENT TO MATING COMPONENT(S). MATCH MARK (STEEL STAMPING) MATING PARTS USING 1.0" TALL CHARACTERS. MARK SHALL BE UNIQUE COMBINATION OF ALPHABET LETTERS AND/OR NUMBERS. EXAMPLE: A1, AB, ETC.

6. FOR 150 KSI UTS FASTENERS (INCLUDING SAE GRADE 8 AND ASTM A490) TORQUE PER MSFC-STD-486B TO THE FOLLOWING VALUES:

   1-1/4" DIA: 1125-1320 FT-LBS

7. PROVIDE FULL-CONTACT SHIMS BETWEEN MATING PARTS AS NEEDED. MATCH MARK SHIMS AND MATING PARTS FOR REASSEMBLY BY ETCHING SHIMS AND STEEL STAMPING WELDMENTS USING 1" TALL CHARACTERS. MARK SHALL BE UNIQUE COMBINATION OF ALPHABET LETTERS AND/OR NUMBERS. EXAMPLE: A1, AB, ETC.

- PRELIMINARY -
THIS DRAWING HAS NOT COMPLETED THE REVIEW PROCESS AND IS SUBJECT TO CHANGE.
07-14-14
DATE

FIND NO.	CALLOUT SHT NO.	DETAIL SHT NO.	TOT REQ'D		PART NO.	DESCRIPTION	VEND NO.	REMARKS
10	2		84	P	90M14272-10	1-8UNC HEX BOLT X 5.00 LG, ZINC FINISH		MATERIAL: ASTM SAE J429 GRADE 8
9	2		220	P	90M14272-9	1-8UNC HEX NUT, ZINC FINISH		MATERIAL: ASTM SAE J995 GRADE 8
8	2		440	P	90M14272-8	1" NOM DIA HIGH STRENGTH FLAT WASHER, 2-1/2" OD, ZINC FINISH		MATERIAL: ASTM SAE GRADE 8
7	2		136	P	90M14272-7	1-8UNC HEX BOLT X 6.00 LG, ZINC FINISH		MATERIAL: ASTM SAE J429 GRADE 8
6	2	4	8	F	90M14272-6	GUSSET 1, 2.0" STK PLATE		MATERIAL: ASTM 572 GRADE 50
5	2		1	E	90M14275-1	CROSS BRACE WELDMENT 2 KICK RING SLS ENGINE SECTION TEST		
4	2		1	E	90M14440-1	CROSS BRACE WELDMENT 1 KICK RING SLS ENGINE SECTION TEST		
3	2		1	E	90M14274-1	CENTER CROSS BRACE WELDMENT KICK RING SLS ENGINE SECTION TEST		
2	2		4	E	90M14273-1	KICK RING WELDMENT OUTER SEGMENT SLS ENGINE SECTION TEST		
1	-	2,3	-	A	90M14272-1	KICK RING SLS ENGINE SECTION TEST		

A=ASSEMBLY/INSTALLATION E=EXISTING F=FABRICATED ITEM M=MODIFIED ITEM P=PURCHASED ITEM

STRESS	DATE	PROGRAM MANAGER	DATE
MATERIALS	DATE	TEST ENGINEER/REQUESTER	DATE
INDUSTRIAL SAFETY	DATE	ETS0 CONTRACTOR DESIGN LEAD	DATE
SAFETY AND MISSION ASSURANCE	DATE	ETS0 CIVIL SERVICE LEAD	DATE
FLIGHT INTERFACES	DATE	CHECKER	DATE
PRESSURE CERTIFICATION MANAGER	DATE	ETS0 BRANCH CHIEF/TEAM LEAD	DATE

UNLESS OTHERWISE SPECIFIED
TOLERANCES ARE

FRACTIONS	DECIMALS
$\pm \frac{1}{16}$ $\pm \frac{1}{2}$°	.X ± .06 .XX ± .03 .XXX ± .010 ∠ ± 30'

(DIMENSIONS ARE IN INCHES, DO NOT SCALE DRAWING)

DRAWN BY	NEXT ASSEMBLY	DATE
J. SHEPHERD	90M13930	07-11-14

KICK RING SLS ENGINE SECTION TEST

SPECIAL TEST EQUIPMENT DESIGN BRANCH - ET50
GEORGE C. MARSHALL SPACE FLIGHT CENTER
NATIONAL AERONAUTICS AND SPACE ADMINISTRATION
HUNTSVILLE, ALABAMA

90M14272 REVISION ~

DWNG SIZE E SHEET 1 OF 4

APPROVED FOR PUBLIC RELEASE; DISTRIBUTION IS UNLIMITED

NOTICE - WHEN GOVERNMENT DRAWINGS, SPECIFICATIONS, OR OTHER DATA ARE USED FOR ANY PURPOSE OTHER THAN IN CONNECTION WITH A DEFINITELY RELATED GOVERNMENT PROCUREMENT OPERATION, THE UNITED STATES GOVERNMENT THEREBY INCURS NO RESPONSIBILITY NOR ANY OBLIGATION WHATSOEVER, AND THE FACT THAT THE GOVERNMENT MAY HAVE FORMULATED, FURNISHED, OR IN ANY WAY SUPPLIED THE SAID DRAWINGS, SPECIFICATIONS OR OTHER DATA IS NOT TO BE REGARDED BY IMPLICATION OR OTHERWISE AS IN ANY MANNER LICENSING THE HOLDER OR ANY OTHER PERSON OR CORPORATION, OR CONVEYING ANY RIGHTS OR PERMISSION TO MANUFACTURE, USE, OR SELL ANY PATENTED INVENTION THAT MAY IN ANY WAY BE RELATED THERETO.

REVISIONS			
SYM	DESCRIPTION	DATE	APPROVAL

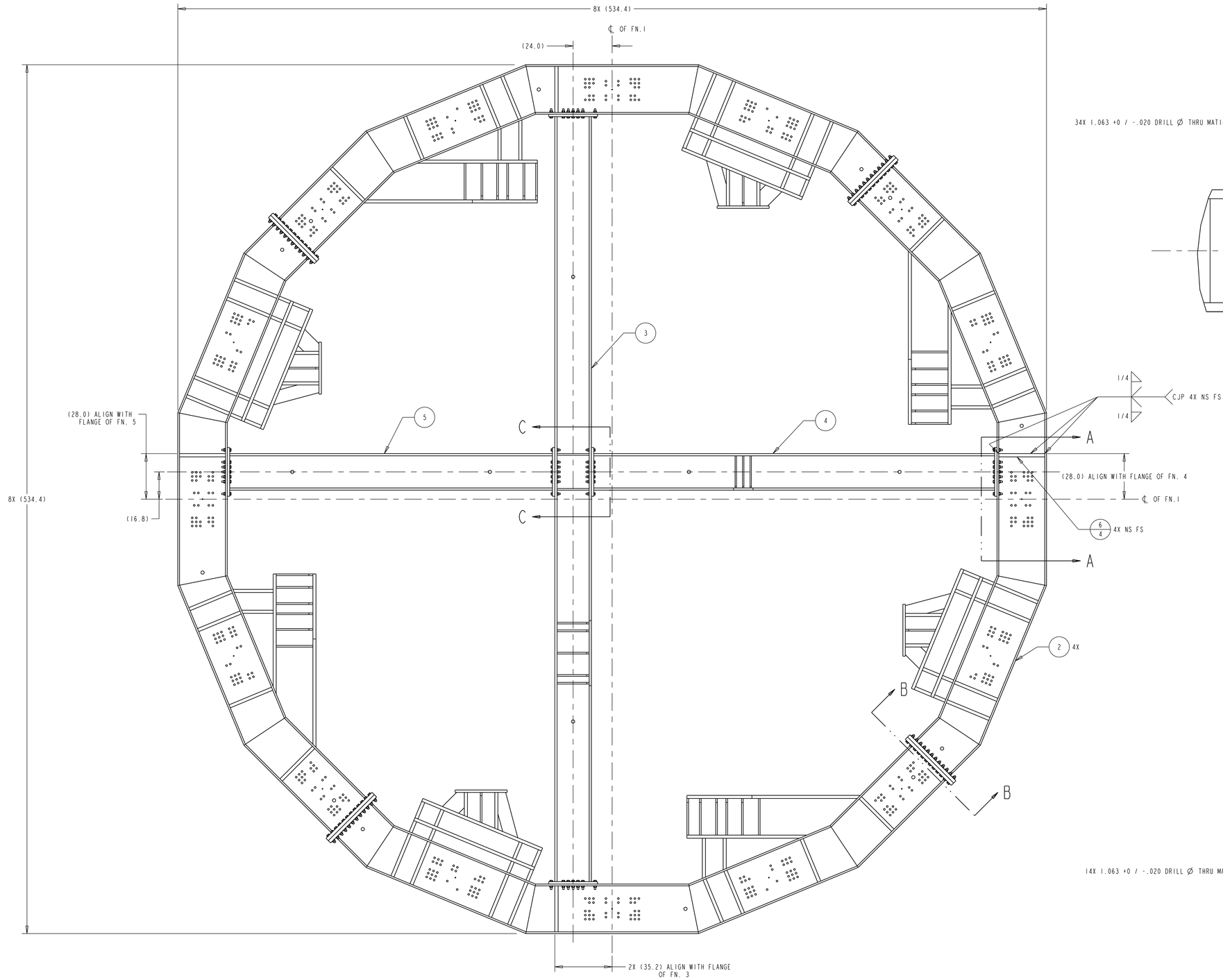

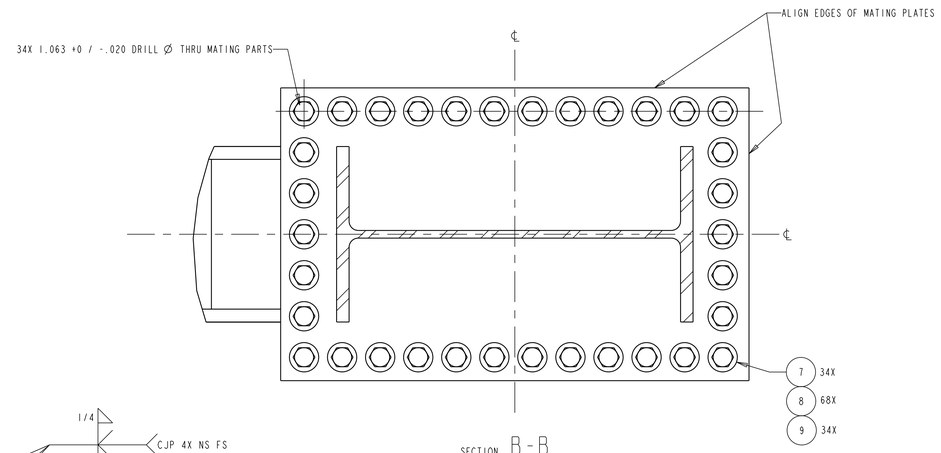

SECTION B-B
4X
SCALE 0.200

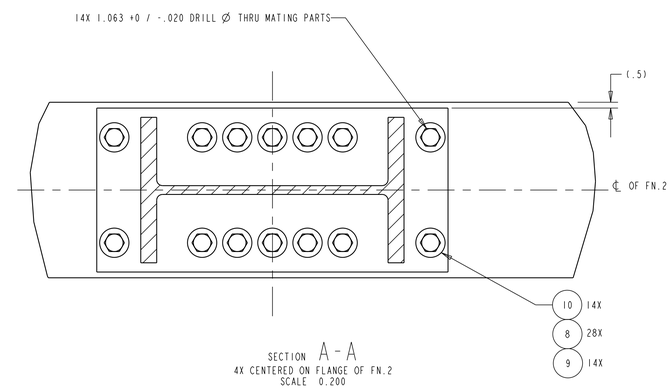

SECTION A-A
4X CENTERED ON FLANGE OF FN.2
SCALE 0.200

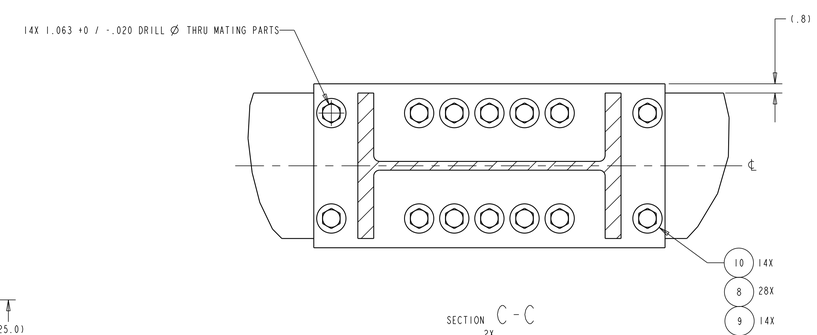

SECTION C-C
2X
CENTERED ON FLANGE OF FN.3
SCALE 0.200

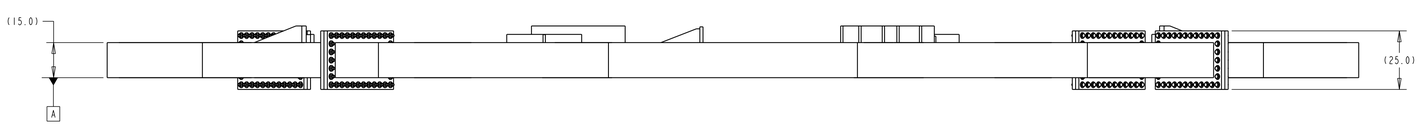

ASSEMBLY 1 4 7

ESTIMATED WEIGHT = 73,250 LBS.

SCALE 0.040

- PRELIMINARY -
THIS DRAWING HAS NOT COMPLETED THE REVIEW PROCESS AND IS SUBJECT TO CHANGE.
07-14-14
DATE

APPROVED FOR PUBLIC RELEASE; DISTRIBUTION IS UNLIMITED

KICK RING
SLS ENGINE SECTION
TEST

SPECIAL TEST EQUIPMENT DESIGN BRANCH - ET50
GEORGE C. MARSHALL SPACE FLIGHT CENTER
NATIONAL AERONAUTICS AND SPACE ADMINISTRATION
HUNTSVILLE, ALABAMA

90M14272 REVISION SEE SHT1

SIZE E SHEET 2 OF 4

NOTICE - WHEN GOVERNMENT DRAWINGS, SPECIFICATIONS, OR OTHER DATA ARE USED FOR ANY PURPOSE OTHER THAN IN CONNECTION WITH A DEFINITELY RELATED GOVERNMENT PROCUREMENT OPERATION, THE UNITED STATES GOVERNMENT THEREBY INCURS NO RESPONSIBILITY NOR ANY OBLIGATION WHATSOEVER, AND THE FACT THAT THE GOVERNMENT MAY HAVE FORMULATED, FURNISHED, OR IN ANY WAY SUPPLIED THE SAID DRAWINGS, SPECIFICATIONS OR OTHER DATA IS NOT TO BE REGARDED BY IMPLICATION OR OTHERWISE AS IN ANY MANNER LICENSING THE HOLDER OR ANY OTHER PERSON OR CORPORATION, OR CONVEYING ANY RIGHTS OR PERMISSION TO MANUFACTURE, USE, OR SELL ANY PATENTED INVENTION THAT MAY IN ANY WAY BE RELATED THERETO.

REVISIONS			
SYM	DESCRIPTION	DATE	APPROVAL

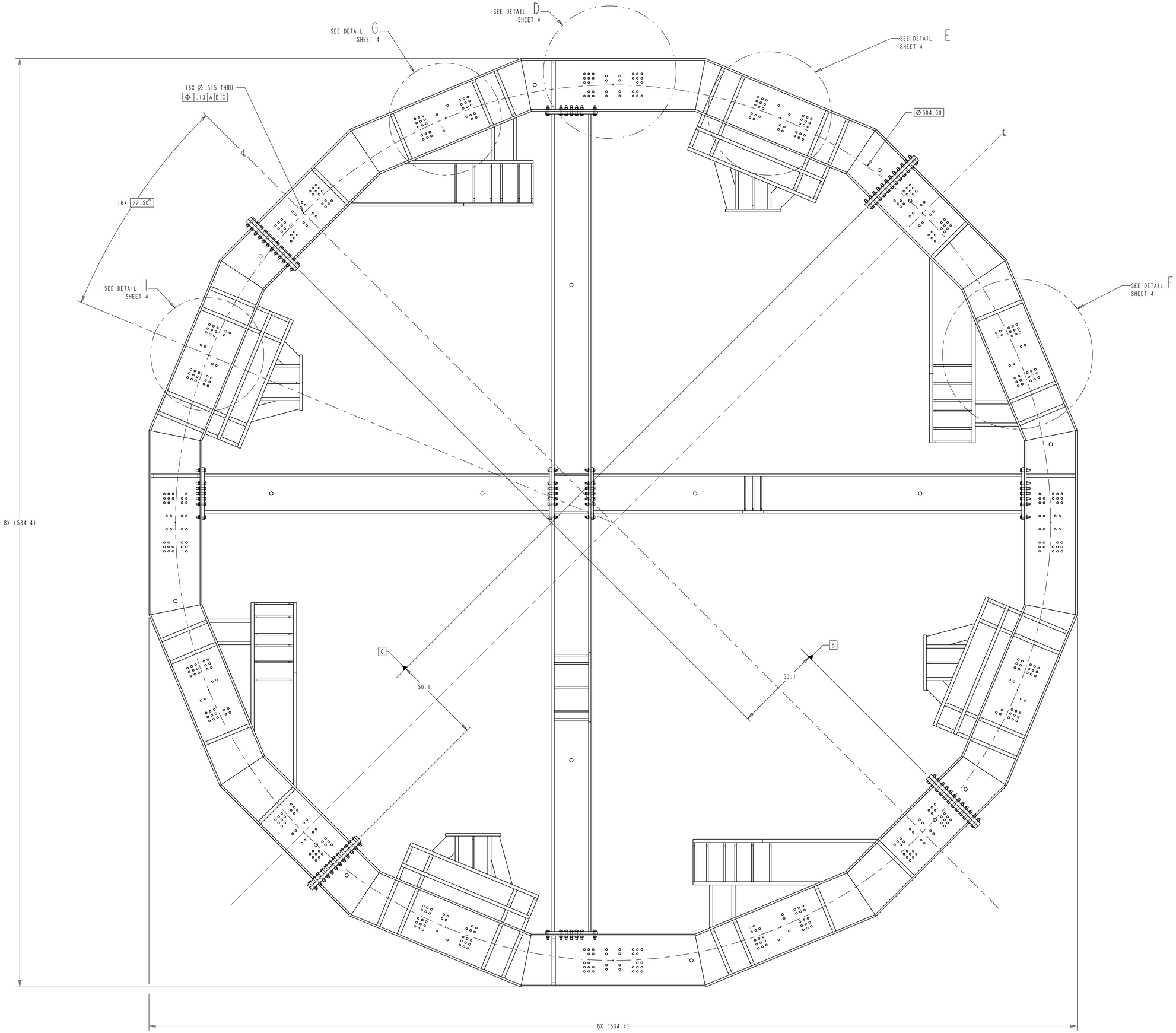

ASSEMBLY (I) SUPPLEMENTAL VIEW

SCALE 0.050

- PRELIMINARY -
THIS DRAWING HAS NOT COMPLETED THE REVIEW PROCESS AND IS SUBJECT TO CHANGE.
07-14-14
DATE

APPROVED FOR PUBLIC RELEASE; DISTRIBUTION IS UNLIMITED

KICK RING
SLS ENGINE SECTION
TEST

SPECIAL TEST EQUIPMENT
DESIGN BRANCH - ET50
GEORGE C. MARSHALL
SPACE FLIGHT CENTER
NATIONAL AERONAUTICS
AND SPACE ADMINISTRATION
HUNTSVILLE, ALABAMA

90M14272 | REVISION SEE SHT1

DWG SIZE E | SHEET 3 OF 4

NOTICE - WHEN GOVERNMENT DRAWINGS, SPECIFICATIONS, OR OTHER DATA ARE USED FOR ANY PURPOSE OTHER THAN IN CONNECTION WITH A DEFINITELY RELATED GOVERNMENT PROCUREMENT OPERATION, THE UNITED STATES GOVERNMENT THEREBY INCURS NO RESPONSIBILITY NOR ANY OBLIGATION WHATSOEVER; AND THE FACT THAT THE GOVERNMENT MAY HAVE FORMULATED, FURNISHED, OR IN ANY WAY SUPPLIED THE SAID DRAWINGS, SPECIFICATIONS OR OTHER DATA IS NOT TO BE REGARDED BY IMPLICATION OR OTHERWISE AS IN ANY MANNER LICENSING THE HOLDER OR ANY OTHER PERSON OR CORPORATION, OR CONVEYING ANY RIGHTS OR PERMISSION TO MANUFACTURE, USE, OR SELL ANY PATENTED INVENTION THAT MAY IN ANY WAY BE RELATED THERETO.

REVISIONS			
SYM	DESCRIPTION	DATE	APPROVAL

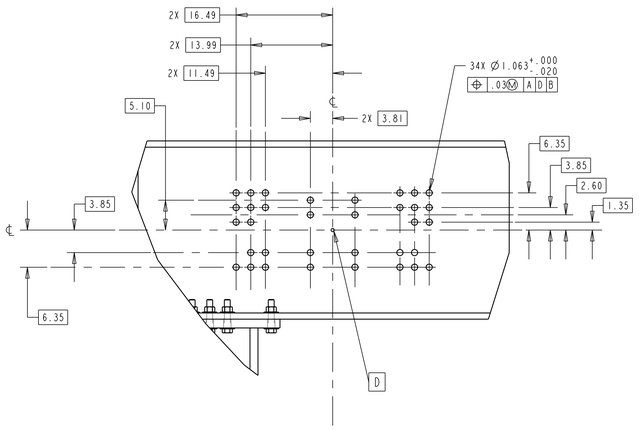

DETAIL D SHEET 3
8 PLACES @ 45°

SCALE 0.100

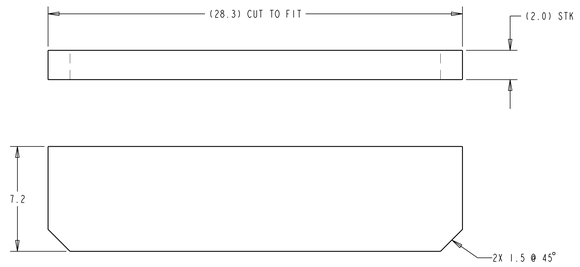

FIND NO. 6/2

SCALE 0.250

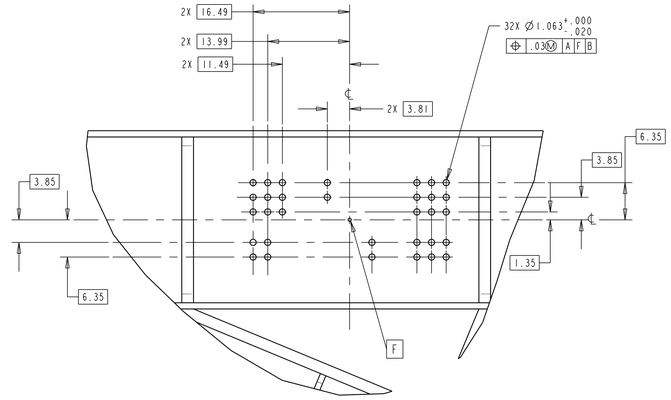

DETAIL F SHEET 3
VIEW ROTATED C.C.W. 67.5°
1X SHOWN 1X 180°

SCALE 0.100

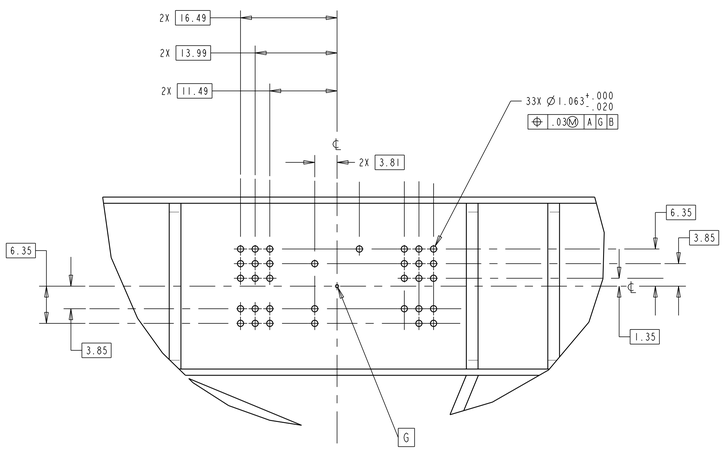

DETAIL G SHEET 3
VIEW ROTATED C.W. 22.5°
1X SHOWN 1X 180°

SCALE 0.100

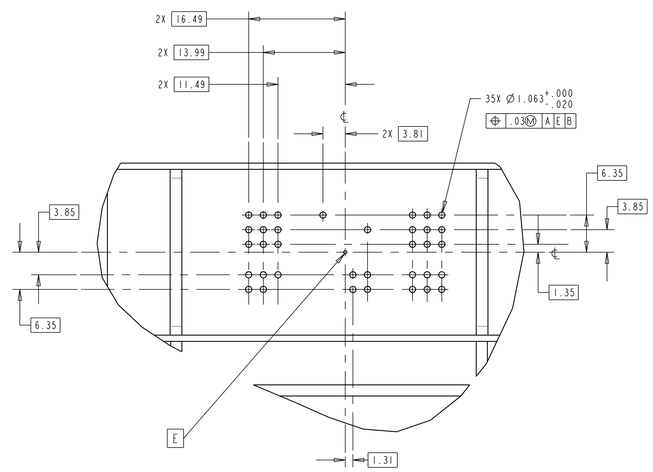

DETAIL E SHEET 3
VIEW ROTATED C.C.W. 22.5°
1X SHOWN 1X 180°

SCALE 0.100

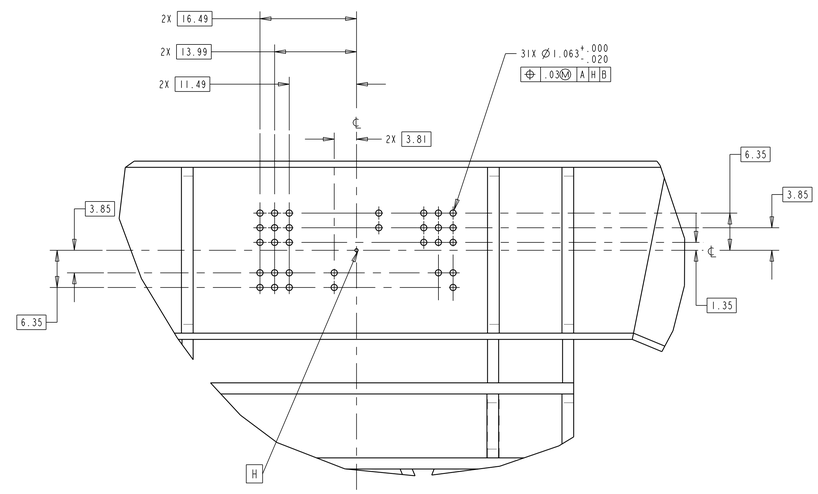

DETAIL H SHEET 3
VIEW ROTATED C.W. 67.5°
1X SHOWN 1X 180°

SCALE 0.100

- PRELIMINARY -
THIS DRAWING HAS NOT COMPLETED THE REVIEW PROCESS AND IS SUBJECT TO CHANGE.
07-14-14
DATE

APPROVED FOR PUBLIC RELEASE; DISTRIBUTION IS UNLIMITED

KICK RING
SLS ENGINE SECTION
TEST

SPECIAL TEST EQUIPMENT
DESIGN BRANCH - ET50
GEORGE C. MARSHALL
SPACE FLIGHT CENTER
NATIONAL AERONAUTICS
AND SPACE ADMINISTRATION
HUNTSVILLE, ALABAMA

90M14272 REVISION SEE SHT1

DWG SIZE E SHEET 4 OF 4

NOTICE - WHEN GOVERNMENT DRAWINGS, SPECIFICATIONS, OR OTHER DATA ARE USED FOR ANY PURPOSE OTHER THAN IN CONNECTION WITH A DEFINITELY RELATED GOVERNMENT PROCUREMENT OPERATION, THE UNITED STATES GOVERNMENT THEREBY INCURS NO RESPONSIBILITY NOR ANY OBLIGATION WHATSOEVER; AND THE FACT THAT THE GOVERNMENT MAY HAVE FORMULATED, FURNISHED, OR IN ANY WAY SUPPLIED THE SAID DRAWINGS, SPECIFICATIONS OR OTHER DATA IS NOT TO BE REGARDED BY IMPLICATION OR OTHERWISE AS IN ANY MANNER LICENSING THE HOLDER OR ANY OTHER PERSON OR CORPORATION, OR CONVEYING ANY RIGHTS OR PERMISSION TO MANUFACTURE, USE, OR SELL ANY PATENTED INVENTION THAT MAY IN ANY WAY BE RELATED THERETO.

REVISIONS

SYM	DESCRIPTION	DATE	APPROVAL

UNLESS OTHERWISE SPECIFIED:

1. REMOVE ALL BURRS AND BREAK ALL SHARP EDGES.
2. 125 ALL MACHINED SURFACES.
   500 ALL EDGES OF CUT PLATES AND ENDS OF AISC SHAPES.
3. DIMENSIONING AND TOLERANCING IN ACCORDANCE WITH ASME Y14.5-1994.
4. STENCIL PART NUMBER IN THE APPROXIMATE LOCATION SHOWN, USING A CONTRASTING COLOR AND 2" TALL LETTERS. STENCIL PART NUMBER TO BE COMPLETED AFTER PAINTING, SEE DRAWING 90M14272.
5. COPED JOINTS AND WELD ACCESS HOLES SHALL BE PER THE EDITION OF ANSI/AWS D1.1/D1.1M "STRUCTURAL WELDING CODE-STEEL" THAT IS CURRENT AT THE RELEASE DATE OF THIS DRAWING. NOTE THAT REQUIRED WELD ACCESS HOLES HAVE NOT BEEN SHOWN AT THE DETAIL LEVEL IN THIS DRAWING.
6. ALL STRUCTURAL STEEL SHAPES SHALL CONFORM TO THE DESIGNATIONS AND DIMENSIONS OF THE AISC "STEEL CONSTRUCTION MANUAL", 14TH EDITION.
7. STEEL WELDING DESIGN, PROCEDURES, AND NON-DESTRUCTIVE EVALUATION SHALL BE PER ANSI/AWS D1.1/D1.1M, "STRUCTURAL WELDING CODE-STEEL" AND CURRENT AS OF THE RELEASE DATE OF THIS DRAWING. UTILIZE WELDING PRACTICES AND TECHNIQUES TO MINIMIZE DISTORTION. UNLESS OTHERWISE SPECIFIED, WELDS SHALL BE 100% VISUALLY INSPECTED.
8. AFTER WELDING AND PRIOR TO FINAL MACHINING, STRESS RELIEVE PER AWS D1.1, "STRUCTURAL WELDING CODE, STEEL", AND CURRENT AS OF THE RELEASE DATE OF THIS DRAWING.

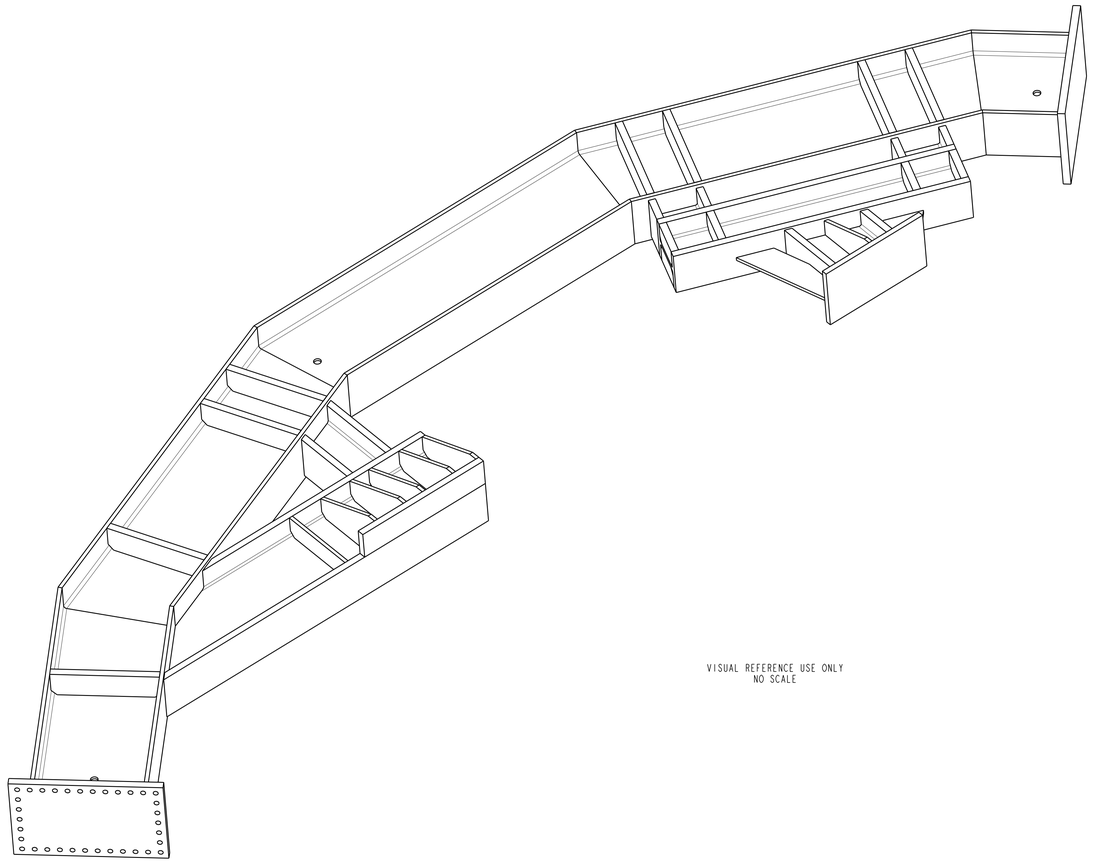

VISUAL REFERENCE USE ONLY
NO SCALE

- PRELIMINARY -
THIS DRAWING HAS NOT COMPLETED THE REVIEW PROCESS AND IS SUBJECT TO CHANGE.
07-11-14
DATE

FIND NO.	CALLOUT SHT NO.	DETAIL SHT NO.	TOT REQ'D		PART NO.	DESCRIPTION	VEND NO.	REMARKS
15	3		A/R	P	90M14273-15	1.89" THK PLATE STK.		MATERIAL: ASTM 572 GRADE 50
14	3	5	8	F	90M14273-14	GUSSET 4, 2.0" STK PLATE		MATERIAL: ASTM 572 GRADE 50
13	3	5	16	F	90M14273-13	GUSSET 3, 2.0" STK PLATE		MATERIAL: ASTM 572 GRADE 50
12	3,4	5	6	F	90M14273-12	GUSSET 2, 1.0" STK PLATE		MATERIAL: ASTM 572 GRADE 50
11	3	5	1	F	90M14273-11	BRACE 2, 1.0" STK PLATE		MATERIAL: ASTM 572 GRADE 50
10	3	5	1	F	90M14273-10	BRACE 1, 1.0" STK PLATE		MATERIAL: ASTM 572 GRADE 50
9	3	5	1	F	90M14273-9	GUSSET 1, 1.0" STK PLATE		MATERIAL: ASTM 572 GRADE 50
8	2		AR	P	90M14273-8	W24 X 250 WIDE FLANGE		MATERIAL: ASTM A992
7	3		AR	P	90M14273-7	2.00" THICK PLATE STK		MATERIAL: ASTM 572 GRADE 50
6	3		AR	P	90M14273-6	1.5" THICK PLATE STK		MATERIAL: ASTM 572 GRADE 50
5	3		AR	P	90M14273-5	1" THICK PLATE STK		MATERIAL: ASTM A992
4	2		AR	P	90M14273-4	W18 X 211 WIDE FLANGE		MATERIAL: ASTM A992
3	2		AR	P	90M14273-3	W12 X 210 WIDE FLANGE		MATERIAL: ASTM A992
2	2		AR	P	90M14273-2	W30 X 173 WIDE FLANGE		MATERIAL: ASTM A992
1	-	2	-	F	90M14273-1	KICK RING WELDMENT OUTER SEGMENT		

A:ASSEMBLY/INSTALLATION E:EXISTING F:FABRICATED ITEM M:MODIFIED ITEM P:PURCHASED ITEM

STRESS	DATE	PROGRAM MANAGER	DATE
MATERIALS	DATE	TEST ENGINEER/REQUESTER	DATE
INDUSTRIAL SAFETY	DATE	ETS0 CONTRACTOR DESIGN LEAD	DATE
SAFETY AND MISSION ASSURANCE	DATE	ETS0 CIVIL SERVICE LEAD	DATE
BOEING TEST CONDUCTOR	DATE	CHECKER	DATE
PRESSURE CERTIFICATION MANAGER	DATE	ETS0 BRANCH CHIEF/TEAM LEAD	DATE

UNLESS OTHERWISE SPECIFIED
TOLERANCES ARE
FRACTIONS: ± 1/16 ± 1/2°
DECIMALS: .X ± .06; .XX ± .03; .XXX ± .010; ∠ ± .50°
(DIMENSIONS ARE IN INCHES, DO NOT SCALE DRAWING)

DRAWN BY	NEXT ASSEMBLY	DATE
J. SHEPHERD	90M14272	10-22-14

KICK RING WELDMENT
OUTER SEGMENT
SLS ENGINE SECTION
TEST

SPECIAL TEST EQUIPMENT DESIGN BRANCH - ET50
GEORGE C. MARSHALL SPACE FLIGHT CENTER
NATIONAL AERONAUTICS AND SPACE ADMINISTRATION
HUNTSVILLE, ALABAMA

90M14273 REVISION ~

DWG SIZE E SHEET 1 OF 5

APPROVED FOR PUBLIC RELEASE; DISTRIBUTION IS UNLIMITED

NOTICE - WHEN GOVERNMENT DRAWINGS, SPECIFICATIONS, OR OTHER DATA ARE USED FOR ANY PURPOSE OTHER THAN IN CONNECTION WITH A DEFINITELY RELATED GOVERNMENT PROCUREMENT OPERATION, THE UNITED STATES GOVERNMENT THEREBY INCURS NO RESPONSIBILITY NOR ANY OBLIGATION WHATSOEVER; AND THE FACT THAT THE GOVERNMENT MAY HAVE FORMULATED, FURNISHED, OR IN ANY WAY SUPPLIED THE SAID DRAWINGS, SPECIFICATIONS OR OTHER DATA IS NOT TO BE REGARDED BY IMPLICATION OR OTHERWISE AS IN ANY MANNER LICENSING THE HOLDER OR ANY OTHER PERSON OR CORPORATION, OR CONVEYING ANY RIGHTS OR PERMISSION TO MANUFACTURE, USE, OR SELL ANY PATENTED INVENTION THAT MAY IN ANY WAY BE RELATED THERETO.

REVISIONS			
SYM	DESCRIPTION	DATE	APPROVAL

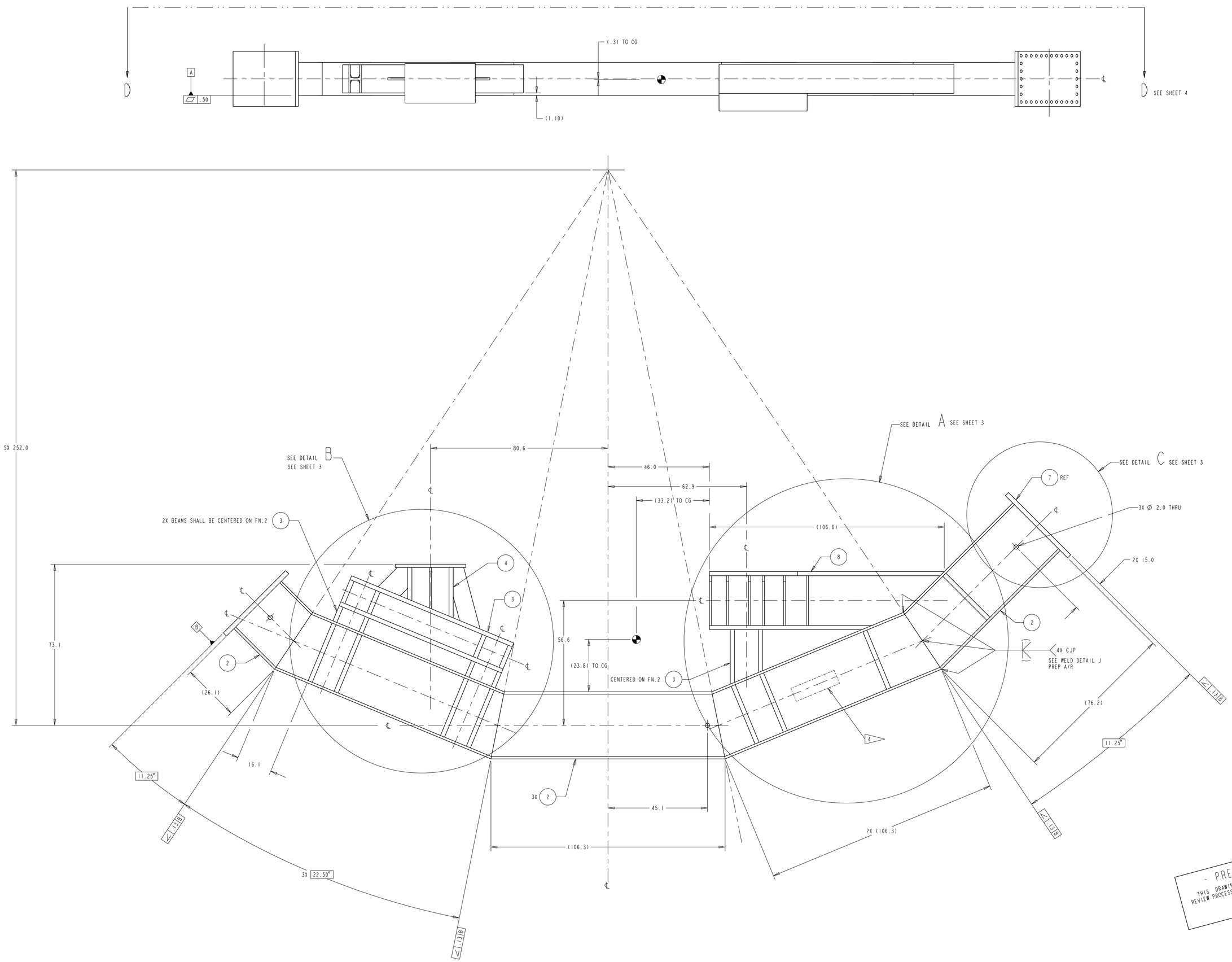

FIND NO. 1

ESTIMATED WEIGHT = 14100 LBS.

SCALE 0.067

APPROVED FOR PUBLIC RELEASE; DISTRIBUTION IS UNLIMITED

KICK RING WELDMENT
OUTER SEGMENT
SLS ENGINE SECTION
TEST

SPECIAL TEST EQUIPMENT
DESIGN BRANCH - ET50
GEORGE C. MARSHALL
SPACE FLIGHT CENTER
NATIONAL AERONAUTICS
AND SPACE ADMINISTRATION
HUNTSVILLE, ALABAMA

90M14273 | REVISION SEE SHT1

DWNG SIZE E | SHEET 2 OF 5

NOTICE - WHEN GOVERNMENT DRAWINGS, SPECIFICATIONS, OR OTHER DATA ARE USED FOR ANY PURPOSE OTHER THAN IN CONNECTION WITH A DEFINITELY RELATED GOVERNMENT PROCUREMENT OPERATION, THE UNITED STATES GOVERNMENT THEREBY INCURS NO RESPONSIBILITY NOR ANY OBLIGATION WHATSOEVER, AND THE FACT THAT THE GOVERNMENT MAY HAVE FORMULATED, FURNISHED, OR IN ANY WAY SUPPLIED THE SAID DRAWINGS, SPECIFICATIONS OR OTHER DATA IS NOT TO BE REGARDED BY IMPLICATION OR OTHERWISE AS IN ANY MANNER LICENSING THE HOLDER OR ANY OTHER PERSON OR CORPORATION, OR CONVEYING ANY RIGHTS OR PERMISSION TO MANUFACTURE, USE, OR SELL ANY PATENTED INVENTION THAT MAY IN ANY WAY BE RELATED THERETO.

REVISIONS			
SYM	DESCRIPTION	DATE	APPROVAL

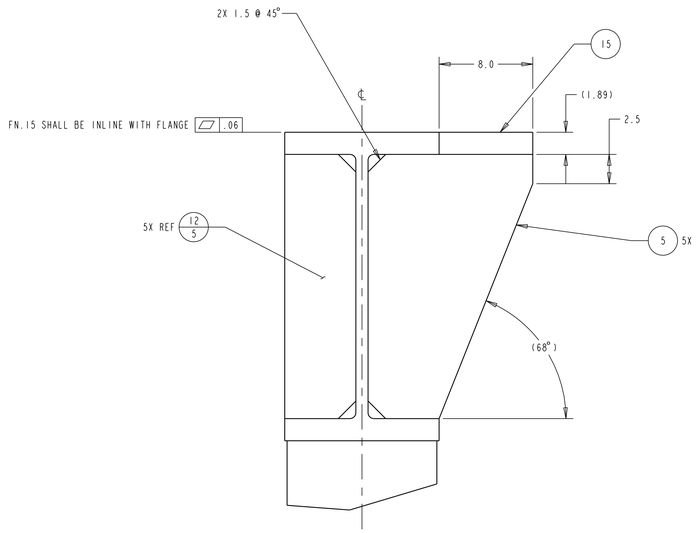

VIEW F - F
SCALE 0.200

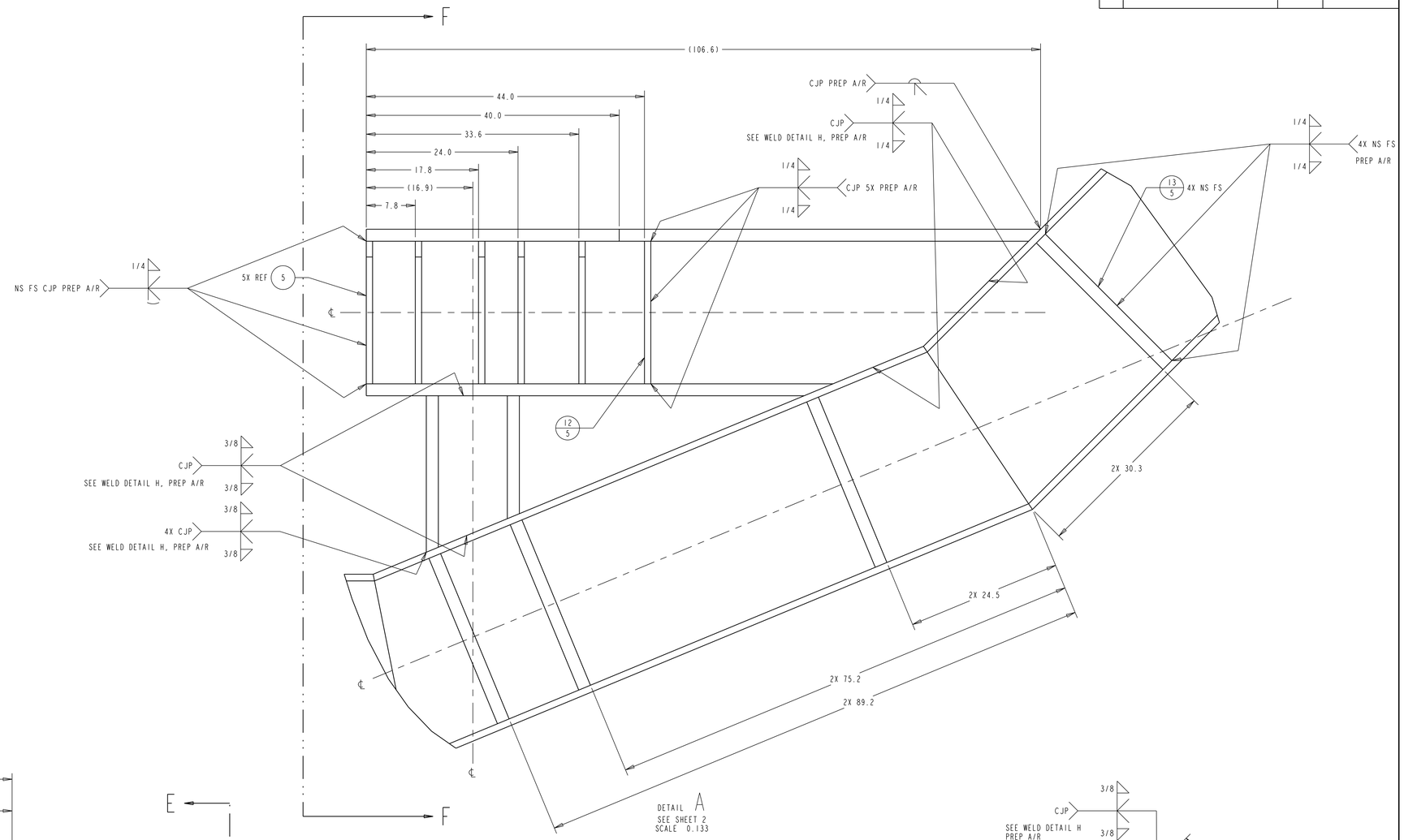

DETAIL A
SEE SHEET 2
SCALE 0.133

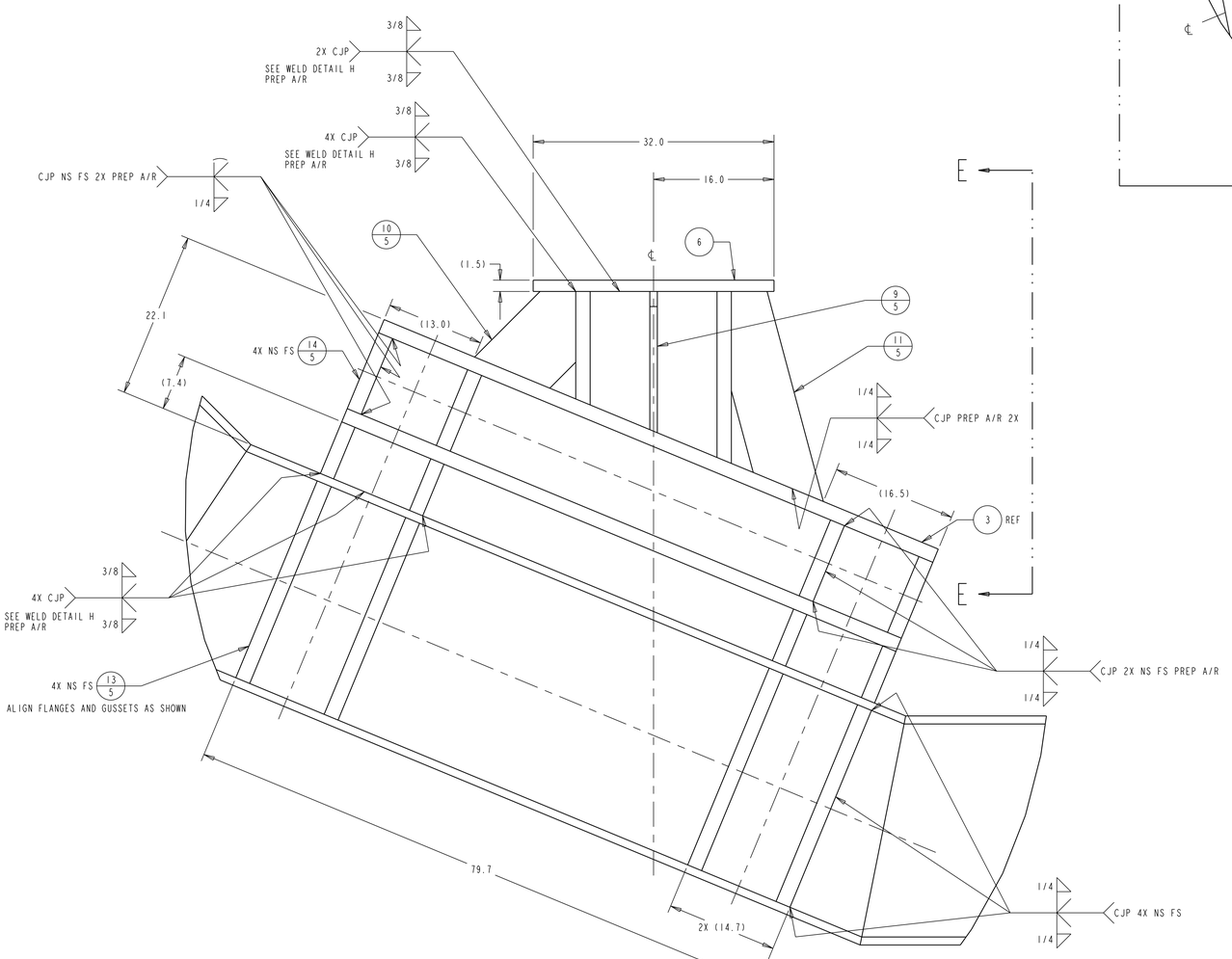

DETAIL B
SEE SHEET 2
SCALE 0.133

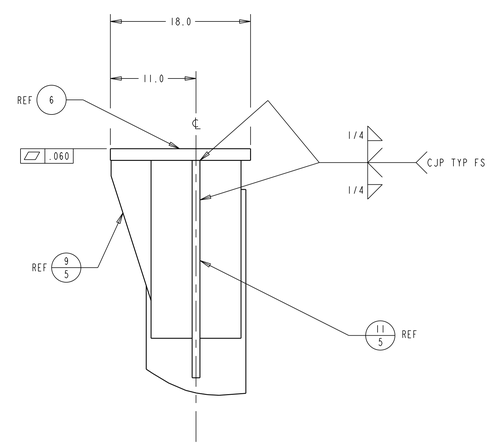

VIEW E - E
SCALE 0.133

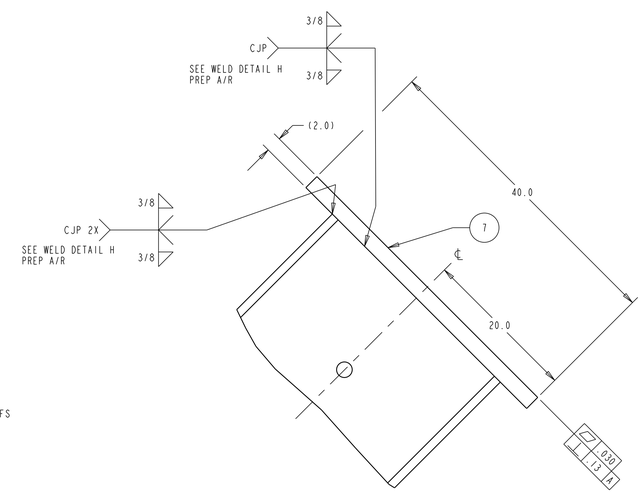

DETAIL C
2 PLACES SEE SHEET 2
SCALE 0.133

- PRELIMINARY -
THIS DRAWING HAS NOT COMPLETED THE REVIEW PROCESS AND IS SUBJECT TO CHANGE.
07-11-14
DATE

APPROVED FOR PUBLIC RELEASE; DISTRIBUTION IS UNLIMITED

KICK RING WELDMENT
OUTER SEGMENT
SLS ENGINE SECTION
TEST

SPECIAL TEST EQUIPMENT DESIGN BRANCH - ET50
GEORGE C. MARSHALL SPACE FLIGHT CENTER
NATIONAL AERONAUTICS AND SPACE ADMINISTRATION
HUNTSVILLE, ALABAMA

90M14273 REVISION SEE SHT1

SIZE E SHEET 3 OF 5

NOTICE - WHEN GOVERNMENT DRAWINGS, SPECIFICATIONS, OR OTHER DATA ARE USED FOR ANY PURPOSE OTHER THAN IN CONNECTION WITH A DEFINITELY RELATED GOVERNMENT PROCUREMENT OPERATION, THE UNITED STATES GOVERNMENT THEREBY INCURS NO RESPONSIBILITY NOR ANY OBLIGATION WHATSOEVER; AND THE FACT THAT THE GOVERNMENT MAY HAVE FORMULATED, FURNISHED, OR IN ANY WAY SUPPLIED THE SAID DRAWINGS, SPECIFICATIONS OR OTHER DATA IS NOT TO BE REGARDED BY IMPLICATION OR OTHERWISE AS IN ANY MANNER LICENSING THE HOLDER OR ANY OTHER PERSON OR CORPORATION, OR CONVEYING ANY RIGHTS OR PERMISSION TO MANUFACTURE, USE, OR SELL ANY PATENTED INVENTION THAT MAY IN ANY WAY BE RELATED THERETO.

REVISIONS			
SYM	DESCRIPTION	DATE	APPROVAL

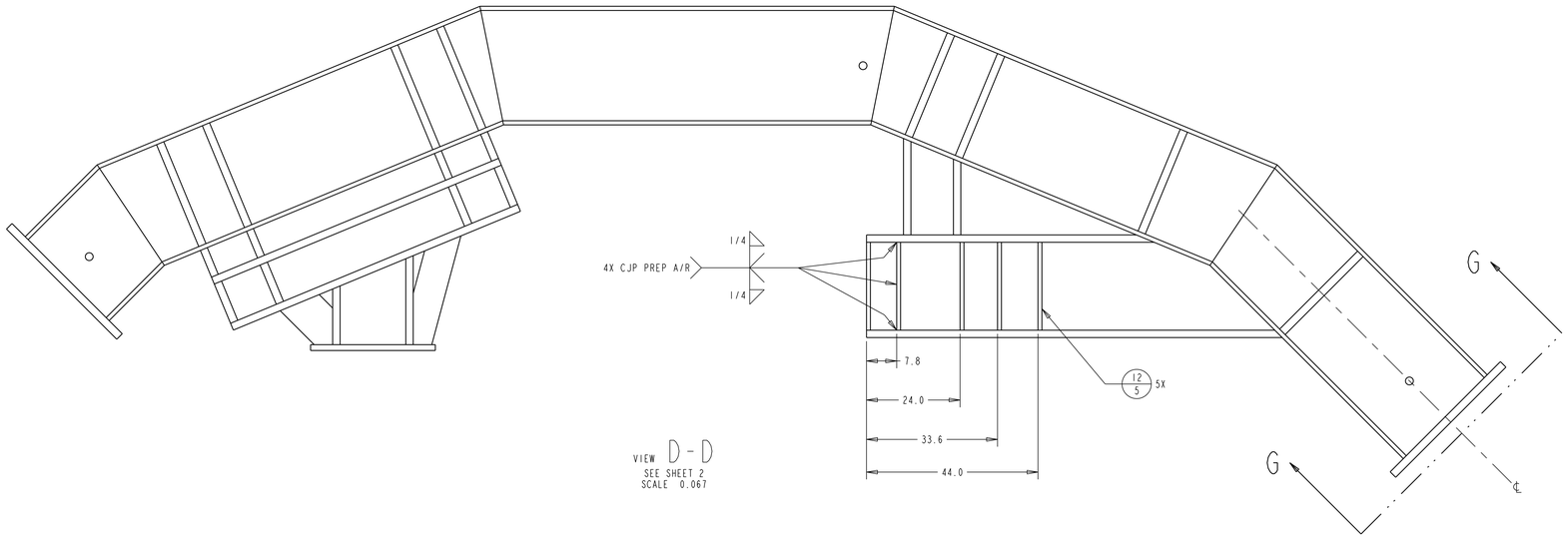

VIEW D-D
SEE SHEET 2
SCALE 0.067

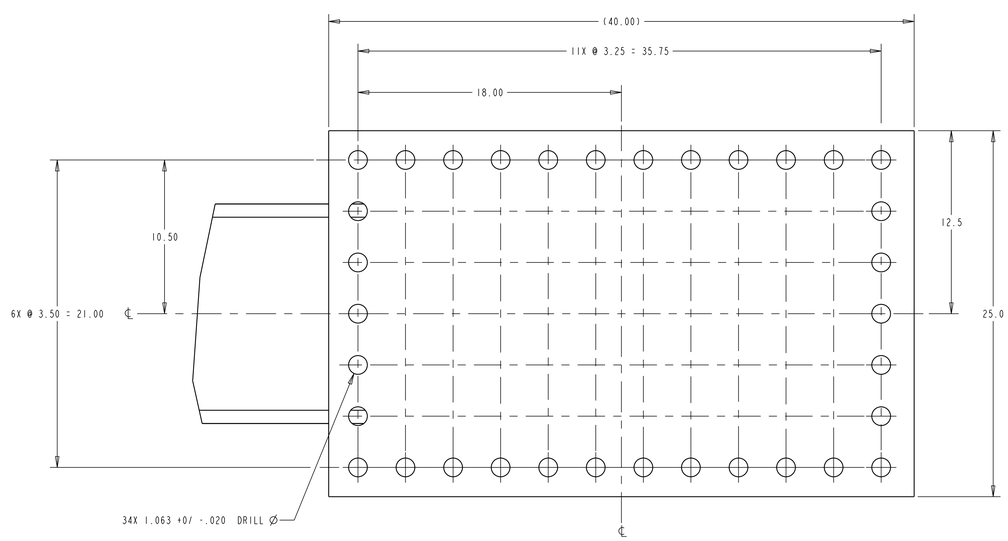

VIEW G-G
1X AS SHOWN AND 1X WITHOUT HOLES
SCALE 0.250

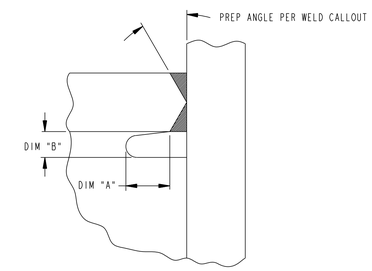

DIM "A" = 1.5 * WEB THICKNESS, BUT NOT LESS THAN 1-1/2"
DIM "B" = WEB THICKNESS, BUT NOT LESS THAN 3/4" NOR GREATER THAN 2"

WELD PREP DETAIL H
SCALE: NONE

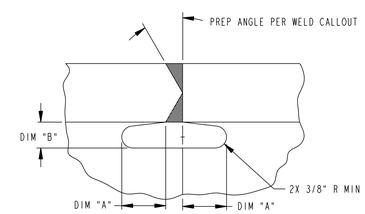

DIM "A" = 1.5 * WEB THICKNESS, BUT NOT LESS THAN 1-1/2"
DIM "B" = WEB THICKNESS, BUT NOT LESS THAN 3/4" NOR GREATER THAN 2"
"ADJUST AS NECESSARY TO ACCOMODATE ANGLE BETWEEN INTERSECTING BEAMS"

WELD PREP DETAIL J
SCALE: NONE

- PRELIMINARY -
THIS DRAWING HAS NOT COMPLETED THE REVIEW PROCESS AND IS SUBJECT TO CHANGE.
07-11-14
DATE

APPROVED FOR PUBLIC RELEASE; DISTRIBUTION IS UNLIMITED

KICK RING WELDMENT
OUTER SEGMENT
SLS ENGINE SECTION
TEST

SPECIAL TEST EQUIPMENT DESIGN BRANCH - ET50
GEORGE C. MARSHALL SPACE FLIGHT CENTER
NATIONAL AERONAUTICS AND SPACE ADMINISTRATION
HUNTSVILLE, ALABAMA

90M14273 REVISION SEE SHT1

DWG SIZE E SHEET 4 OF 5

NOTICE - WHEN GOVERNMENT DRAWINGS, SPECIFICATIONS, OR OTHER DATA ARE USED FOR ANY PURPOSE OTHER THAN IN CONNECTION WITH A DEFINITELY RELATED GOVERNMENT PROCUREMENT OPERATION, THE UNITED STATES GOVERNMENT THEREBY INCURS NO RESPONSIBILITY NOR ANY OBLIGATION WHATSOEVER, AND THE FACT THAT THE GOVERNMENT MAY HAVE FORMULATED, FURNISHED, OR IN ANY WAY SUPPLIED THE SAID DRAWINGS, SPECIFICATIONS OR OTHER DATA IS NOT TO BE REGARDED BY IMPLICATION OR OTHERWISE AS IN ANY MANNER LICENSING THE HOLDER OR ANY OTHER PERSON OR CORPORATION, OR CONVEYING ANY RIGHTS OR PERMISSION TO MANUFACTURE, USE, OR SELL ANY PATENTED INVENTION THAT MAY IN ANY WAY BE RELATED THERETO.

REVISIONS			
SYM	DESCRIPTION	DATE	APPROVAL

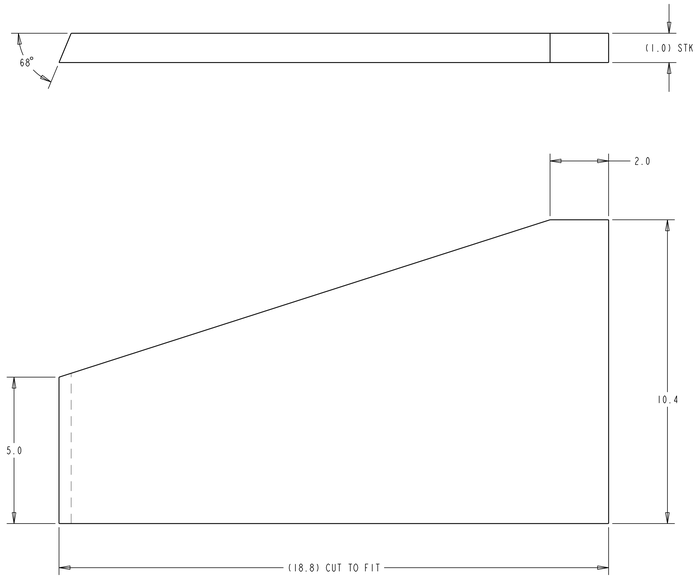

FIND NO. 9/3
SCALE 0.500

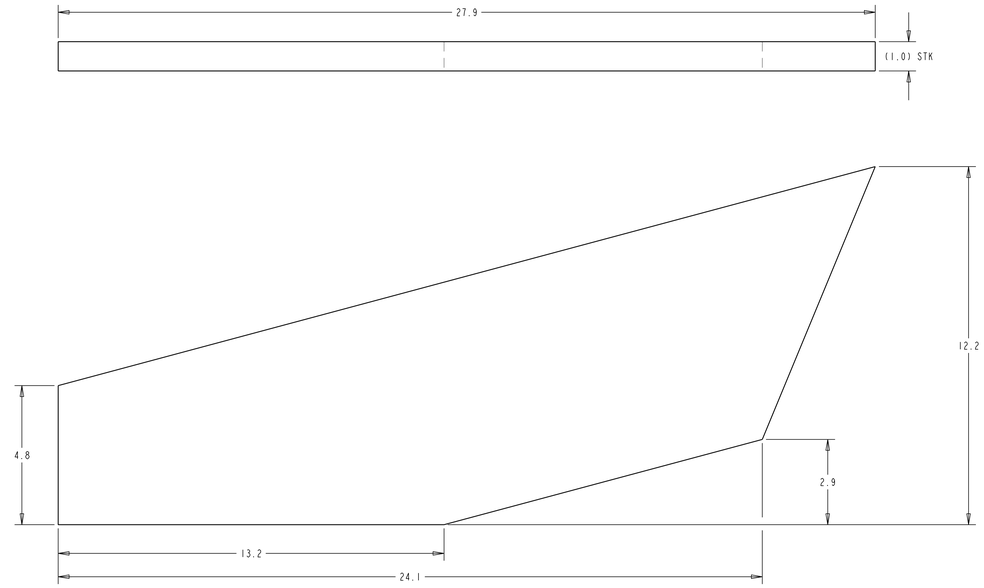

FIND NO. 11/3
SCALE 0.500

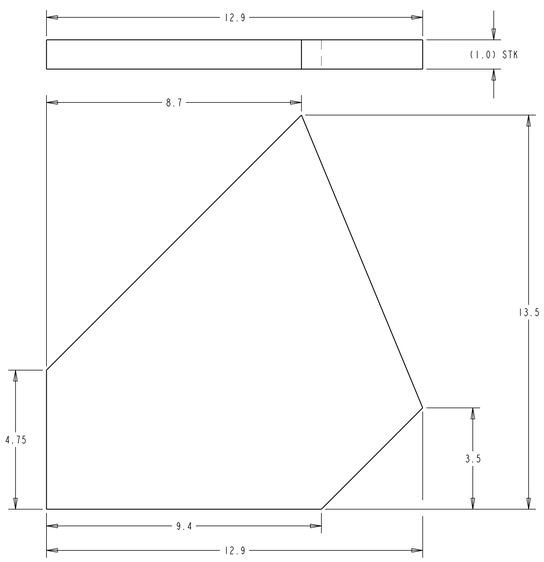

FIND NO. 10/3
SCALE 0.500

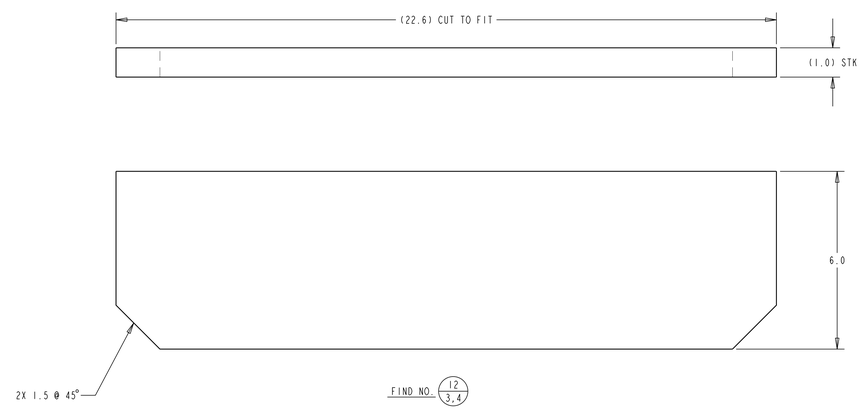

FIND NO. 12/3,4
SCALE 0.500

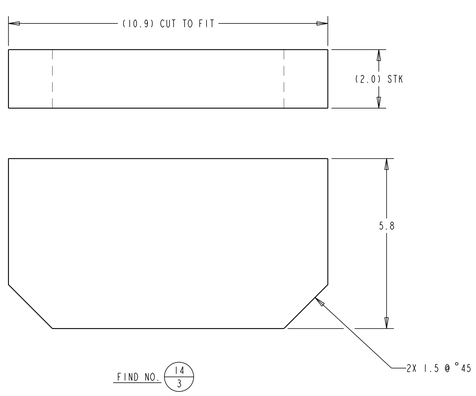

FIND NO. 14/3
SCALE 0.500

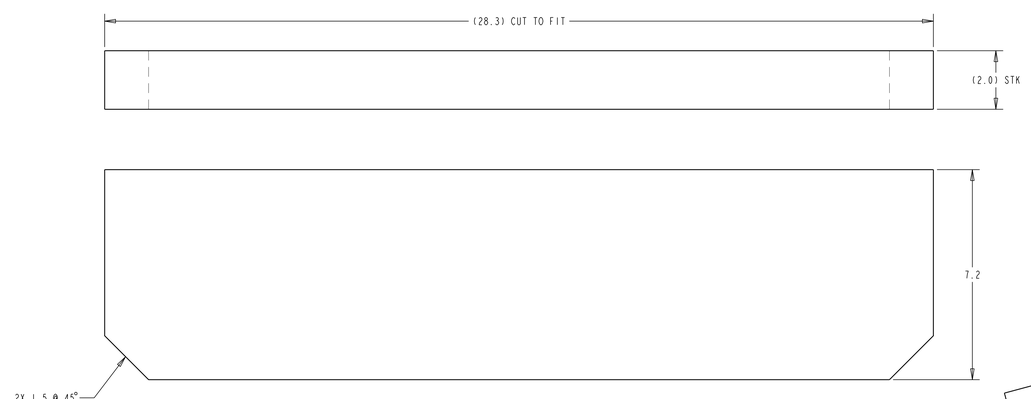

FIND NO. 13/3
SCALE 0.500

- PRELIMINARY -
THIS DRAWING HAS NOT COMPLETED THE REVIEW PROCESS AND IS SUBJECT TO CHANGE.
07-11-14
DATE

APPROVED FOR PUBLIC RELEASE; DISTRIBUTION IS UNLIMITED

KICK RING WELDMENT
OUTER SEGMENT
SLS ENGINE SECTION
TEST

SPECIAL TEST EQUIPMENT DESIGN BRANCH - ET50
GEORGE C. MARSHALL SPACE FLIGHT CENTER
NATIONAL AERONAUTICS AND SPACE ADMINISTRATION
HUNTSVILLE, ALABAMA

90M14273 REVISION SEE SHT1

DWG SIZE E SHEET 5 OF 5

NOTICE - WHEN GOVERNMENT DRAWINGS, SPECIFICATIONS, OR OTHER DATA ARE USED FOR ANY PURPOSE OTHER THAN IN CONNECTION WITH A DEFINITELY RELATED GOVERNMENT PROCUREMENT OPERATION, THE UNITED STATES GOVERNMENT THEREBY INCURS NO RESPONSIBILITY NOR ANY OBLIGATION WHATSOEVER, AND THE FACT THAT THE GOVERNMENT MAY HAVE FORMULATED, FURNISHED, OR IN ANY WAY SUPPLIED THE SAID DRAWINGS, SPECIFICATIONS OR OTHER DATA IS NOT TO BE REGARDED BY IMPLICATION OR OTHERWISE AS IN ANY MANNER LICENSING THE HOLDER OR ANY OTHER PERSON OR CORPORATION, OR CONVEYING ANY RIGHTS OR PERMISSION TO MANUFACTURE, USE, OR SELL ANY PATENTED INVENTION THAT MAY IN ANY WAY BE RELATED THERETO.

REVISIONS			
SYM	DESCRIPTION	DATE	APPROVAL

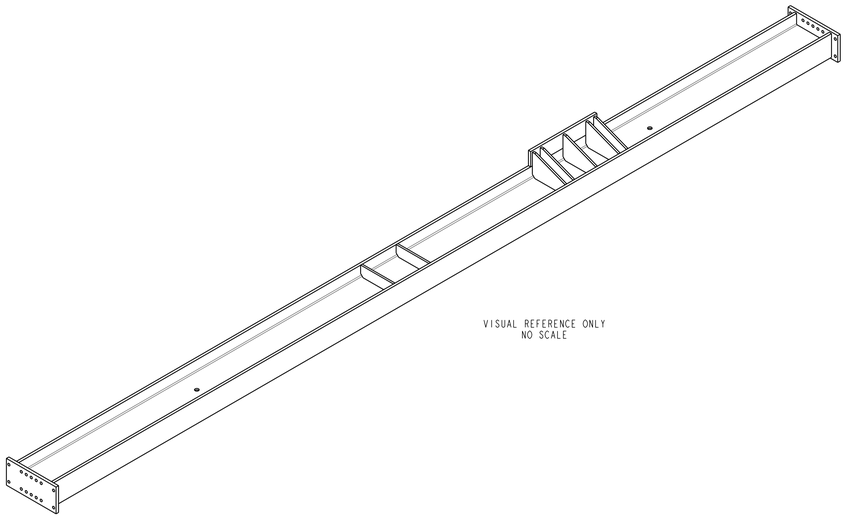

UNLESS OTHERWISE SPECIFIED:

1. REMOVE ALL BURRS AND BREAK ALL SHARP EDGES.
2. 125√ ALL MACHINED SURFACES.
   500√ ALL EDGES OF CUT PLATES AND ENDS OF AISC SHAPES.
3. DIMENSIONING AND TOLERANCING IN ACCORDANCE WITH ASME Y14.5-1994.
4. STENCIL PART NUMBER IN THE APPROXIMATE LOCATION SHOWN, USING A CONTRASTING COLOR AND 2" TALL LETTERS. STENCIL PART NUMBER TO BE COMPLETED AFTER PAINTING, SEE DRAWING 90M14272.
5. COPED JOINTS AND WELD ACCESS HOLES SHALL BE PER THE EDITION OF ANSI/AWS D1.1/D1.1M "STRUCTURAL WELDING CODE-STEEL" THAT IS CURRENT AT THE RELEASE DATE OF THIS DRAWING. NOTE THAT REQUIRED WELD ACCESS HOLES HAVE NOT BEEN SHOWN AT THE DETAIL LEVEL IN THIS DRAWING.
6. ALL STRUCTURAL STEEL SHAPES SHALL CONFORM TO THE DESIGNATIONS AND DIMENSIONS OF THE AISC "STEEL CONSTRUCTION MANUAL", 14TH EDITION.
7. STEEL WELDING DESIGN, PROCEDURES, AND NON-DESTRUCTIVE EVALUATION SHALL BE PER ANSI/AWS D1.1/D1.1M. "STRUCTURAL WELDING CODE-STEEL" AND CURRENT AS OF THE RELEASE DATE OF THIS DRAWING. UTILIZE WELDING PRACTICES AND TECHNIQUES TO MINIMIZE DISTORTION. UNLESS OTHERWISE SPECIFIED, WELDS SHALL BE 100% VISUALLY INSPECTED.
8. AFTER WELDING AND PRIOR TO FINAL MACHINING, STRESS RELIEVE PER AWS D1.1, "STRUCTURAL WELDING CODE, STEEL", AND CURRENT AS OF THE RELEASE DATE OF THIS DRAWING.

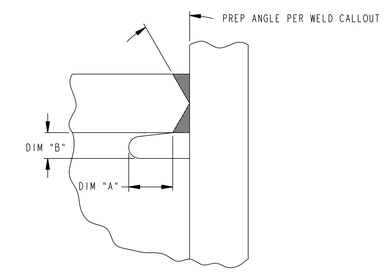

DIM "A" = 1.5 * WEB THICKNESS, BUT NOT LESS THAN 1-1/2"
DIM "B" = WEB THICKNESS, BUT NOT LESS THAN 3/4" NOR GREATER THAN 2"

WELD PREP DETAIL D
SCALE: NONE

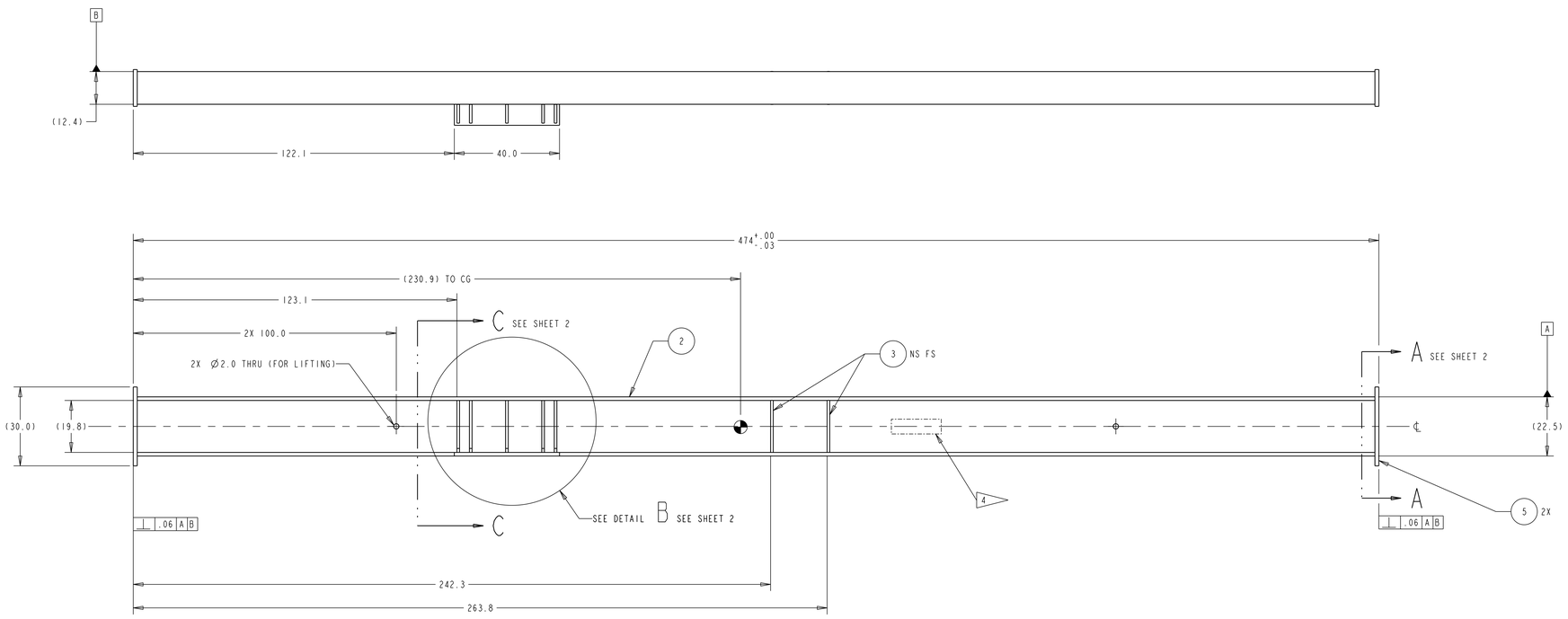

- PRELIMINARY -
THIS DRAWING HAS NOT COMPLETED THE REVIEW PROCESS AND IS SUBJECT TO CHANGE.
07-11-14
DATE

FIND NO. 1

ESTIMATED WEIGHT = 7250 LBS.

SCALE 0.050

FIND NO.	CALLOUT SHT NO.	DETAIL SHT NO.	TOT REQ'D		PART NO.	DESCRIPTION	VEND NO.	REMARKS
5	1		AR	P	90M14274-5	1.5" STK. PLATE		MATERIAL: ASTM 572 GRADE 50
4	2		AR	P	90M14274-4	1.36" PLATE		MATERIAL: ASTM 572 GRADE 50
3	2		AR	P	90M14274-3	1.0" STK. PLATE		MATERIAL: ASTM 572 GRADE 50
2	1		AR	P	90M14274-2	W21 X 166 WIDE FLANGE		MATERIAL: ASTM A992
1	-		-	F	90M14274-1	CENTER CROSS BRACE KICK RING SLS ENGINE SECTION TEST		

A:ASSEMBLY/INSTALLATION E:EXISTING F:FABRICATED ITEM M:MODIFIED ITEM P:PURCHASED ITEM

STRESS	DATE	PROGRAM MANAGER	DATE
MATERIALS	DATE	TEST ENGINEER/REDESIGNER	DATE
INDUSTRIAL SAFETY	DATE	ETS0 CONTRACTOR DESIGN LEAD	DATE
SAFETY AND MISSION ASSURANCE	DATE	ETS0 CIVIL SERVICE LEAD	DATE
BOEING TEST CONDUCTOR	DATE	CHECKER	DATE
PRESSURE CERTIFICATION MANAGER	DATE	ETS0 BRANCH CHIEF/TEAM LEAD	DATE

UNLESS OTHERWISE SPECIFIED
TOLERANCES ARE
FRACTIONS: ± 1/16 ± 1/2°
DECIMALS: .X ± .06; .XX ± .03; .XXX ± .010; ∠ ± .50°
(DIMENSIONS ARE IN INCHES, DO NOT SCALE DRAWING)

DRAWN BY	NEXT ASSEMBLY	DATE
JEFF SHEPHERD	90M14272	03-05-14

CENTER CROSS BRACE
KICK RING
SLS ENGINE SECTION
TEST

SPECIAL TEST EQUIPMENT
DESIGN BRANCH - ET50
GEORGE C. MARSHALL
SPACE FLIGHT CENTER
NATIONAL AERONAUTICS
AND SPACE ADMINISTRATION
HUNTSVILLE, ALABAMA

90M14274 REVISION ~

DWG SIZE E SHEET 1 OF 2

APPROVED FOR PUBLIC RELEASE; DISTRIBUTION IS UNLIMITED

NOTICE - WHEN GOVERNMENT DRAWINGS, SPECIFICATIONS, OR OTHER DATA ARE USED FOR ANY PURPOSE OTHER THAN IN CONNECTION WITH A DEFINITELY RELATED GOVERNMENT PROCUREMENT OPERATION, THE UNITED STATES GOVERNMENT THEREBY INCURS NO RESPONSIBILITY NOR ANY OBLIGATION WHATSOEVER; AND THE FACT THAT THE GOVERNMENT MAY HAVE FORMULATED, FURNISHED, OR IN ANY WAY SUPPLIED THE SAID DRAWINGS, SPECIFICATIONS OR OTHER DATA IS NOT TO BE REGARDED BY IMPLICATION OR OTHERWISE AS IN ANY MANNER LICENSING THE HOLDER OR ANY OTHER PERSON OR CORPORATION, OR CONVEYING ANY RIGHTS OR PERMISSION TO MANUFACTURE, USE, OR SELL ANY PATENTED INVENTION THAT MAY IN ANY WAY BE RELATED THERETO.

REVISIONS			
SYM	DESCRIPTION	DATE	APPROVAL

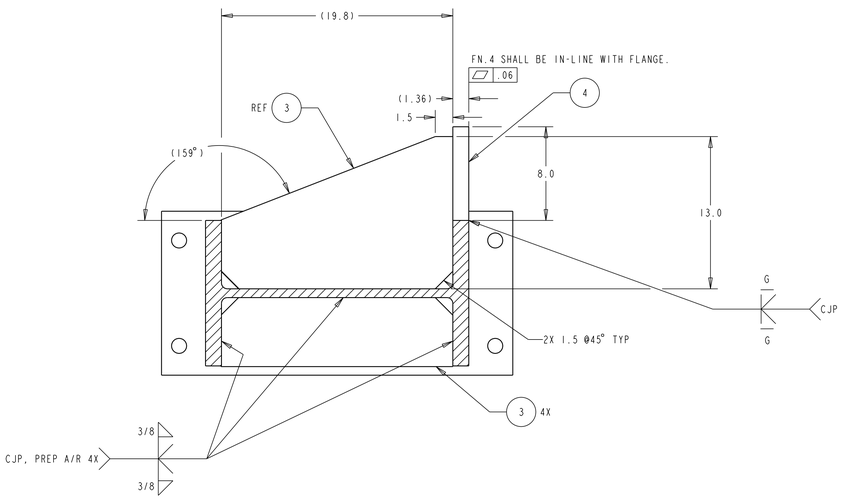

SECTION C - C
SEE SHEET 1
SCALE 0.200

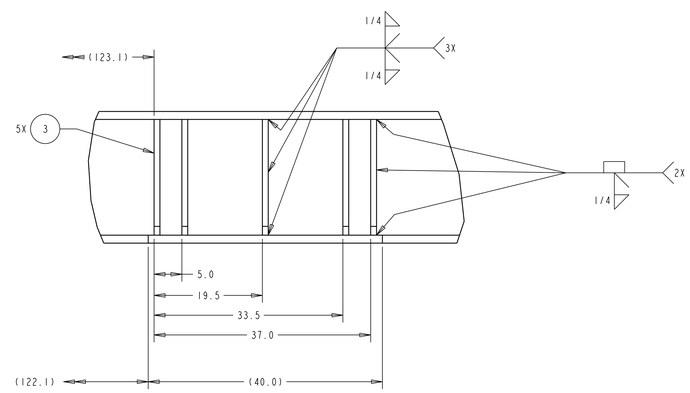

DETAIL B
SEE SHEET 1
SCALE 0.100

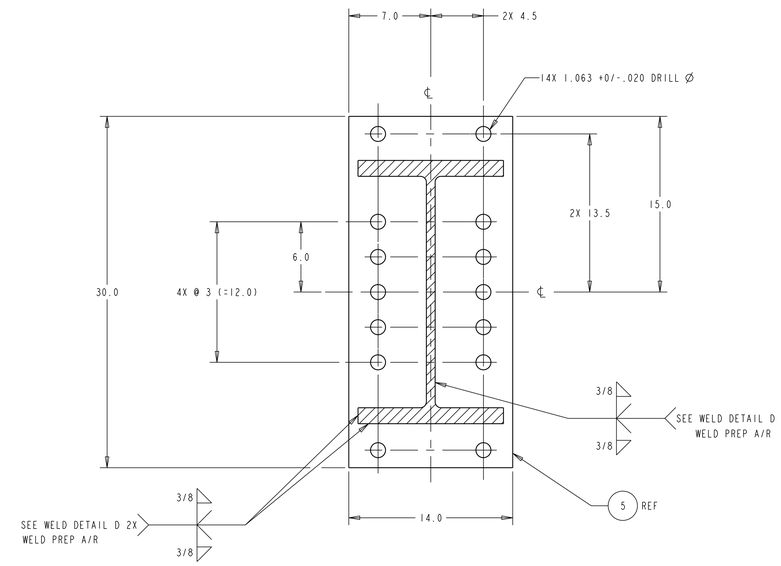

SECTION A - A
2X
SEE SHEET 1
SCALE 0.200

- PRELIMINARY -
THIS DRAWING HAS NOT COMPLETED THE REVIEW PROCESS AND IS SUBJECT TO CHANGE.
07-11-14
DATE

APPROVED FOR PUBLIC RELEASE; DISTRIBUTION IS UNLIMITED

CENTER CROSS BRACE
KICK RING
SLS ENGINE SECTION
TEST

SPECIAL TEST EQUIPMENT
DESIGN BRANCH - ET50
GEORGE C. MARSHALL
SPACE FLIGHT CENTER
NATIONAL AERONAUTICS
AND SPACE ADMINISTRATION
HUNTSVILLE, ALABAMA

90M14274 | REVISION SEE SHT1

DWNG SIZE E | SHEET 2 OF 2

NOTICE - WHEN GOVERNMENT DRAWINGS, SPECIFICATIONS, OR OTHER DATA ARE USED FOR ANY PURPOSE OTHER THAN IN CONNECTION WITH A DEFINITELY RELATED GOVERNMENT PROCUREMENT OPERATION, THE UNITED STATES GOVERNMENT THEREBY INCURS NO RESPONSIBILITY NOR ANY OBLIGATION WHATSOEVER; AND THE FACT THAT THE GOVERNMENT MAY HAVE FORMULATED, FURNISHED, OR IN ANY WAY SUPPLIED THE SAID DRAWINGS, SPECIFICATIONS OR OTHER DATA IS NOT TO BE REGARDED BY IMPLICATION OR OTHERWISE AS IN ANY MANNER LICENSING THE HOLDER OR ANY OTHER PERSON OR CORPORATION, OR CONVEYING ANY RIGHTS OR PERMISSION TO MANUFACTURE, USE, OR SELL ANY PATENTED INVENTION THAT MAY IN ANY WAY BE RELATED THERETO.

REVISIONS			
SYM	DESCRIPTION	DATE	APPROVAL

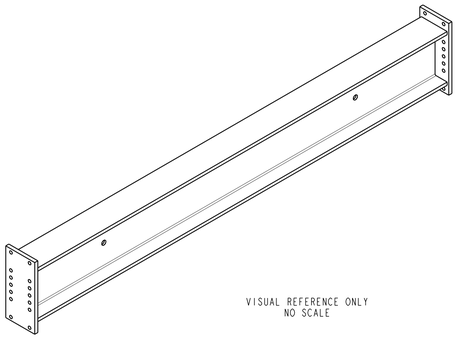

VISUAL REFERENCE ONLY
NO SCALE

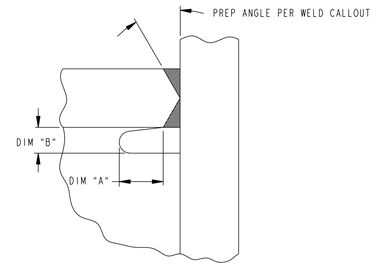

DIM "A" = 1.5 * WEB THICKNESS, BUT NOT LESS THAN 1-1/2"
DIM "B" = WEB THICKNESS, BUT NOT LESS THAN 3/4" NOR GREATER THAN 2"

WELD PREP DETAIL B

SCALE: NONE

UNLESS OTHERWISE SPECIFIED:

1. REMOVE ALL BURRS AND BREAK ALL SHARP EDGES.
2. 125/ ALL MACHINED SURFACES.
   500/ ALL EDGES OF CUT PLATES AND ENDS OF AISC SHAPES.
3. DIMENSIONING AND TOLERANCING IN ACCORDANCE WITH ASME Y14.5-1994.
4. STENCIL PART NUMBER IN THE APPROXIMATE LOCATION SHOWN, USING A CONTRASTING COLOR AND 2" TALL LETTERS. STENCIL PART NUMBER TO BE COMPLETED AFTER PAINTING, SEE DRAWING 90M14272.
5. COPED JOINTS AND WELD ACCESS HOLES SHALL BE PER THE EDITION OF ANSI/AWS D1.1/D1.1M "STRUCTURAL WELDING CODE-STEEL" THAT IS CURRENT AT THE RELEASE DATE OF THIS DRAWING. NOTE THAT REQUIRED WELD ACCESS HOLES HAVE NOT BEEN SHOWN AT THE DETAIL LEVEL IN THIS DRAWING.
6. ALL STRUCTURAL STEEL SHAPES SHALL CONFORM TO THE DESIGNATIONS AND DIMENSIONS OF THE AISC "STEEL CONSTRUCTION MANUAL", 14TH EDITION.
7. STEEL WELDING DESIGN, PROCEDURES, AND NON-DESTRUCTIVE EVALUATION SHALL BE PER ANSI/AWS D1.1/D1.1M, "STRUCTURAL WELDING CODE-STEEL" AND CURRENT AS OF THE RELEASE DATE OF THIS DRAWING. UTILIZE WELDING PRACTICES AND TECHNIQUES TO MINIMIZE DISTORTION. UNLESS OTHERWISE SPECIFIED, WELDS SHALL BE 100% VISUALLY INSPECTED.
8. AFTER WELDING AND PRIOR TO FINAL MACHINING, STRESS RELIEVE PER AWS D1.1, "STRUCTURAL WELDING CODE, STEEL", AND CURRENT AS OF THE RELEASE DATE OF THIS DRAWING.

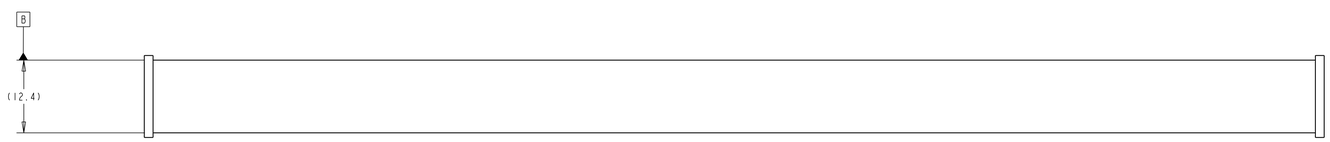

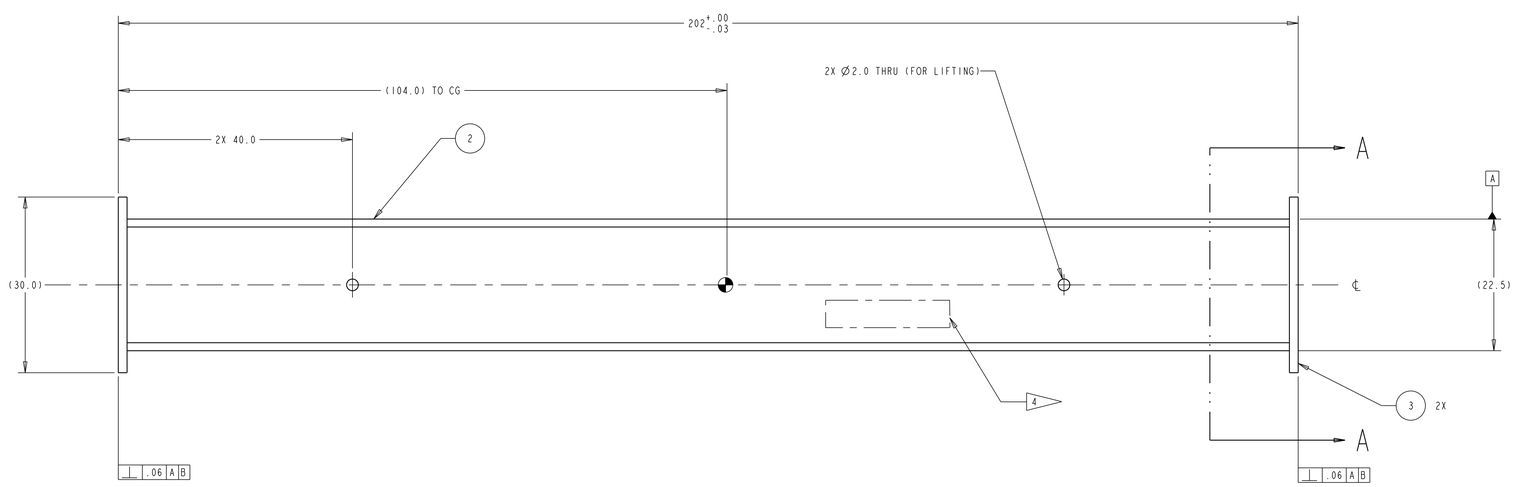

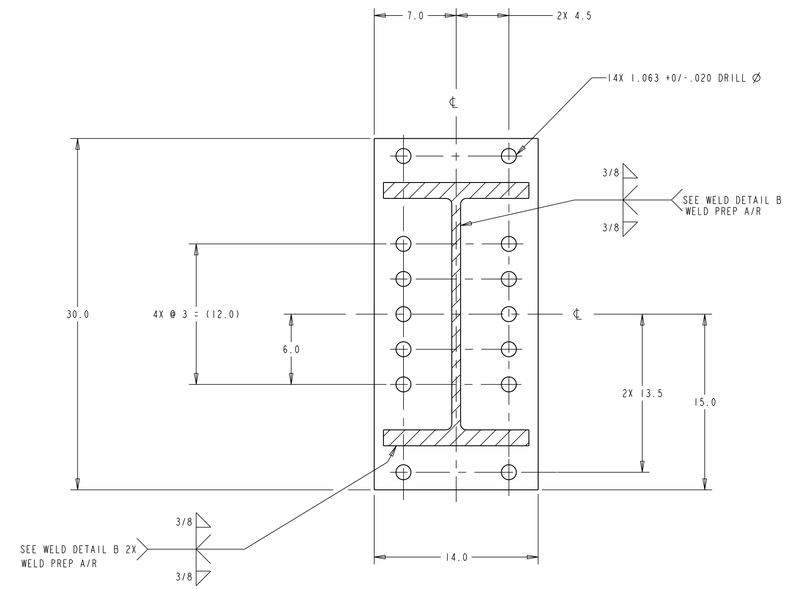

SECTION A - A
SCALE 2X 0.200

FIND NO. 1

ESTIMATED WEIGHT = 3000 LBS.

SCALE 0.100

- PRELIMINARY -
THIS DRAWING HAS NOT COMPLETED THE REVIEW PROCESS AND IS SUBJECT TO CHANGE.
07-11-14
DATE

FIND NO.	CALLOUT SHT NO.	DETAIL SHT NO.	TOT REQ'D		PART NO.	DESCRIPTION	VEND NO.	REMARKS
3	1		AR	P	90M14275-3	1.5" STK PLATE		MATERIAL: ASTM 572 GRADE 50
2	1		AR	P	90M14275-2	W21 X 166 WIDE FLANGE		MATERIAL: ASTM A992
1	-		-	F	90M14275-1	CROSS BRACE WELDMENT 2 KICK RING SLS ENGINE SECTION TEST		

A=ASSEMBLY/INSTALLATION E=EXISTING F=FABRICATED ITEM M=MODIFIED ITEM P=PURCHASED ITEM

STRESS	DATE	PROGRAM MANAGER	DATE
MATERIALS	DATE	TEST ENGINEER/REQUESTER	DATE
INDUSTRIAL SAFETY	DATE	ETS0 CONTRACTOR DESIGN LEAD	DATE
SAFETY AND MISSION ASSURANCE	DATE	ETS0 CIVIL SERVICE LEAD	DATE
BOEING TEST CONDUCTOR	DATE	CHECKER	DATE
PRESSURE CERTIFICATION MANAGER	DATE	ETS0 BRANCH CHIEF/TEAM LEAD	DATE

UNLESS OTHERWISE SPECIFIED
TOLERANCES ARE
FRACTIONS: ± 1/16 ± 1°/2
DECIMALS: .X ± .06; .XX ± .03; .XXX ± .010; ∠ ± .50°
(DIMENSIONS ARE IN INCHES, DO NOT SCALE DRAWING)

DRAWN BY J.SHEPHERD | NEXT ASSEMBLY 90M14272 | DATE 03-21-14

CROSS BRACE WELDMENT 2
KICK RING
SLS ENGINE SECTION TEST

SPECIAL TEST EQUIPMENT DESIGN BRANCH - ET50
GEORGE C. MARSHALL SPACE FLIGHT CENTER
NATIONAL AERONAUTICS AND SPACE ADMINISTRATION
HUNTSVILLE, ALABAMA

90M14275 | REVISION -

DWG SIZE E | SHEET 1 OF 1

APPROVED FOR PUBLIC RELEASE; DISTRIBUTION IS UNLIMITED

NOTICE - WHEN GOVERNMENT DRAWINGS, SPECIFICATIONS, OR OTHER DATA ARE USED FOR ANY PURPOSE OTHER THAN IN CONNECTION WITH A DEFINITELY RELATED GOVERNMENT PROCUREMENT OPERATION, THE UNITED STATES GOVERNMENT THEREBY INCURS NO RESPONSIBILITY NOR ANY OBLIGATION WHATSOEVER; AND THE FACT THAT THE GOVERNMENT MAY HAVE FORMULATED, FURNISHED, OR IN ANY WAY SUPPLIED THE SAID DRAWINGS, SPECIFICATIONS OR OTHER DATA IS NOT TO BE REGARDED BY IMPLICATION OR OTHERWISE AS IN ANY MANNER LICENSING THE HOLDER OR ANY OTHER PERSON OR CORPORATION, OR CONVEYING ANY RIGHTS OR PERMISSION TO MANUFACTURE, USE, OR SELL ANY PATENTED INVENTION THAT MAY IN ANY WAY BE RELATED THERETO.

REVISIONS			
SYM	DESCRIPTION	DATE	APPROVAL

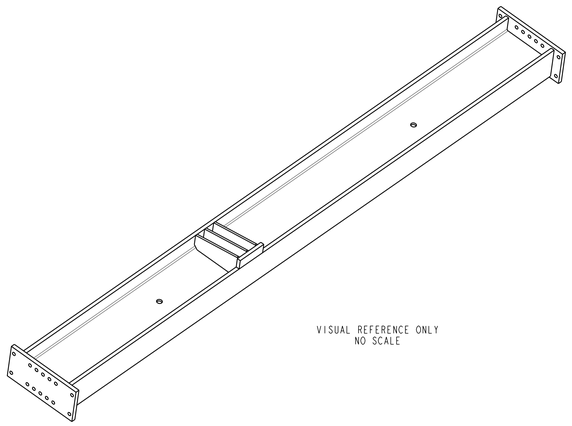

VISUAL REFERENCE ONLY
NO SCALE

UNLESS OTHERWISE SPECIFIED:

1. REMOVE ALL BURRS AND BREAK ALL SHARP EDGES.
2. 125√ ALL MACHINED SURFACES.
   500√ ALL EDGES OF CUT PLATES AND ENDS OF AISC SHAPES.
3. DIMENSIONING AND TOLERANCING IN ACCORDANCE WITH ASME Y14.5-1994.
4. STENCIL PART NUMBER IN THE APPROXIMATE LOCATION SHOWN, USING A CONTRASTING COLOR AND 2" TALL LETTERS. STENCIL PART NUMBER TO BE COMPLETED AFTER PAINTING, SEE DRAWING 90M14272.
5. COPED JOINTS AND WELD ACCESS HOLES SHALL BE PER THE EDITION OF ANSI/AWS D1.1/D1.1M "STRUCTURAL WELDING CODE-STEEL" THAT IS CURRENT AT THE RELEASE DATE OF THIS DRAWING. NOTE THAT REQUIRED WELD ACCESS HOLES HAVE NOT BEEN SHOWN AT THE DETAIL LEVEL IN THIS DRAWING.
6. ALL STRUCTURAL STEEL SHAPES SHALL CONFORM TO THE DESIGNATIONS AND DIMENSIONS OF THE AISC "STEEL CONSTRUCTION MANUAL", 14TH EDITION.
7. STEEL WELDING DESIGN, PROCEDURES, AND NON-DESTRUCTIVE EVALUATION SHALL BE PER ANSI/AWS D1.1/D1.1M, "STRUCTURAL WELDING CODE-STEEL" AND CURRENT AS OF THE RELEASE DATE OF THIS DRAWING. UTILIZE WELDING PRACTICES AND TECHNIQUES TO MINIMIZE DISTORTION. UNLESS OTHERWISE SPECIFIED, WELDS SHALL BE 100% VISUALLY INSPECTED.
8. AFTER WELDING AND PRIOR TO FINAL MACHINING, STRESS RELIEVE PER AWS D1.1, "STRUCTURAL WELDING CODE, STEEL", AND CURRENT AS OF THE RELEASE DATE OF THIS DRAWING.

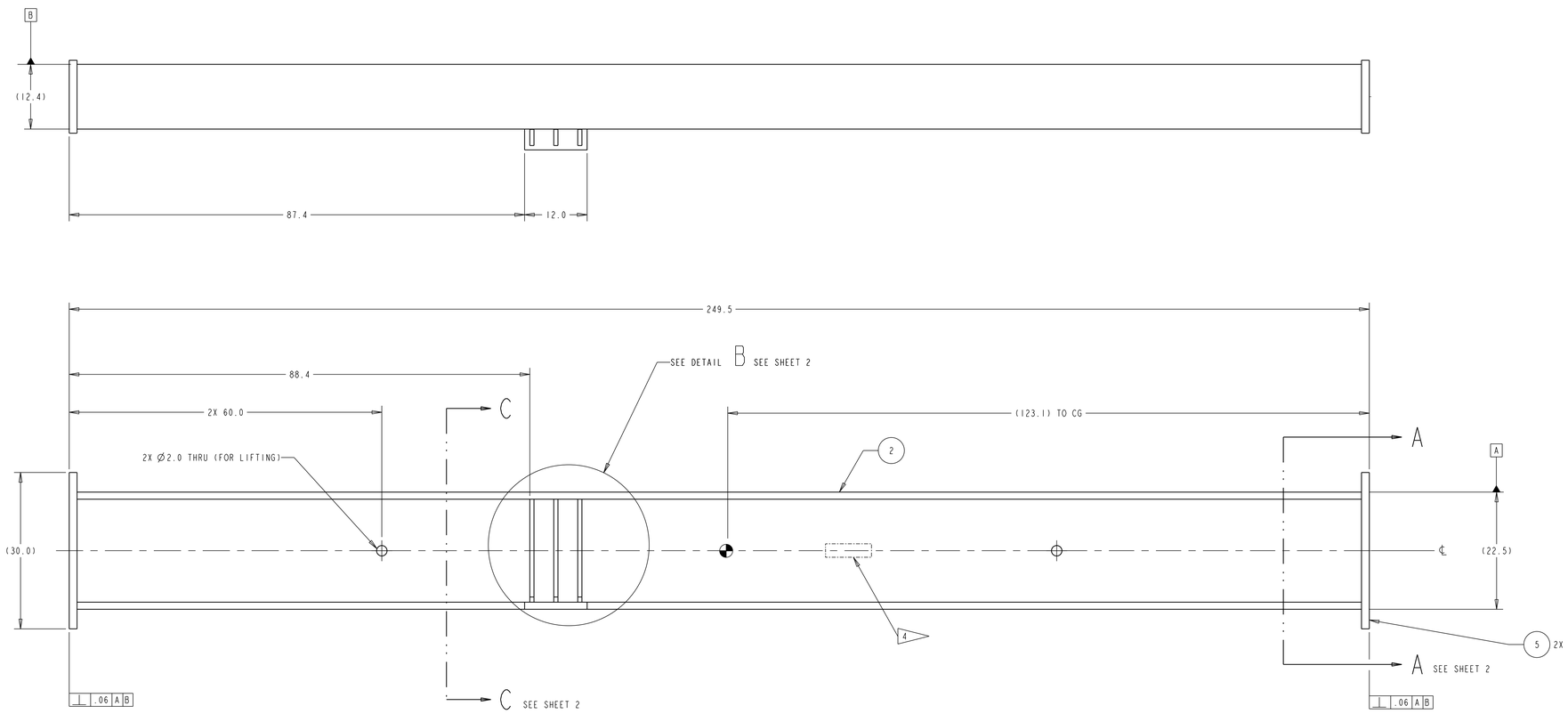

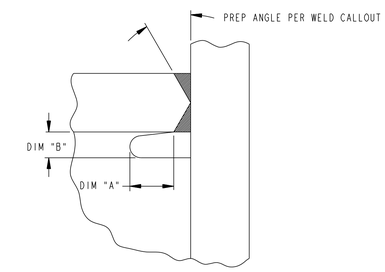

DIM "A" = 1.5 * WEB THICKNESS, BUT NOT LESS THAN 1-1/2"
DIM "B" = WEB THICKNESS, BUT NOT LESS THAN 3/4" NOR GREATER THAN 2"

WELD PREP DETAIL D
SCALE: NONE

- PRELIMINARY -
THIS DRAWING HAS NOT COMPLETED THE REVIEW PROCESS AND IS SUBJECT TO CHANGE.
07-11-14
DATE

FIND NO. 1

ESTIMATED WEIGHT = 3800 LBS.
SCALE 0.100

FIND NO.	CALLOUT SHT NO.	DETAIL SHT NO.	TOT REQ'D		PART NO.	DESCRIPTION	VEND NO.	REMARKS
5	1		AR	P	90M14440-5	1.5" STK PLATE		MATERIAL: ASTM 572 GRADE 50
4	2		AR	P	90M14440-4	1.36" PLATE		MATERIAL: ASTM 572 GRADE 50
3	2		AR	P	90M14440-3	1.0" STK PLATE		MATERIAL: ASTM 572 GRADE 50
2	1		AR	P	90M14440-2	W21 X 166 WIDE FLANGE		MATERIAL: ASTM A992
1	-		-	F	90M14440-1	CROSS BRACE WELDMENT 1 KICK RING SLS ENGINE SECTION TEST		

A=ASSEMBLY/INSTALLATION E=EXISTING F=FABRICATED ITEM M=MODIFIED ITEM P=PURCHASED ITEM

STRESS	DATE	PROGRAM MANAGER	DATE
MATERIALS	DATE	TEST ENGINEER/REQUESTER	DATE
INDUSTRIAL SAFETY	DATE	ETS0 CONTRACTOR DESIGN LEAD	DATE
SAFETY AND MISSION ASSURANCE	DATE	ETS0 CIVIL SERVICE LEAD	DATE
BOEING TEST CONDUCTOR	DATE	CHECKER	DATE
PRESSURE CERTIFICATION MANAGER	DATE	ETS0 BRANCH CHIEF/TEAM LEAD	DATE

UNLESS OTHERWISE SPECIFIED
TOLERANCES ARE
FRACTIONS: ± 1/16 ± 1/2"
DECIMALS: .X ± .06; .XX ± .03; .XXX ± .010; ∠ ± 30'
(DIMENSIONS ARE IN INCHES, DO NOT SCALE DRAWING)

NEXT ASSEMBLY: 90M14272
DRAWN BY: JEFF SHEPHERD
DATE: 03-19-14

CROSS BRACE WELDMENT 1 KICK RING SLS ENGINE SECTION TEST

SPECIAL TEST EQUIPMENT DESIGN BRANCH - ET50
GEORGE C. MARSHALL SPACE FLIGHT CENTER
NATIONAL AERONAUTICS AND SPACE ADMINISTRATION
HUNTSVILLE, ALABAMA

90M14440 REVISION ~

DWG SIZE E SHEET 1 OF 2

APPROVED FOR PUBLIC RELEASE; DISTRIBUTION IS UNLIMITED

NOTICE - WHEN GOVERNMENT DRAWINGS, SPECIFICATIONS, OR OTHER DATA ARE USED FOR ANY PURPOSE OTHER THAN IN CONNECTION WITH A DEFINITELY RELATED GOVERNMENT PROCUREMENT OPERATION, THE UNITED STATES GOVERNMENT THEREBY INCURS NO RESPONSIBILITY NOR ANY OBLIGATION WHATSOEVER; AND THE FACT THAT THE GOVERNMENT MAY HAVE FORMULATED, FURNISHED, OR IN ANY WAY SUPPLIED THE SAID DRAWINGS, SPECIFICATIONS OR OTHER DATA IS NOT TO BE REGARDED BY IMPLICATION OR OTHERWISE AS IN ANY MANNER LICENSING THE HOLDER OR ANY OTHER PERSON OR CORPORATION, OR CONVEYING ANY RIGHTS OR PERMISSION TO MANUFACTURE, USE, OR SELL ANY PATENTED INVENTION THAT MAY IN ANY WAY BE RELATED THERETO.

REVISIONS			
SYM	DESCRIPTION	DATE	APPROVAL

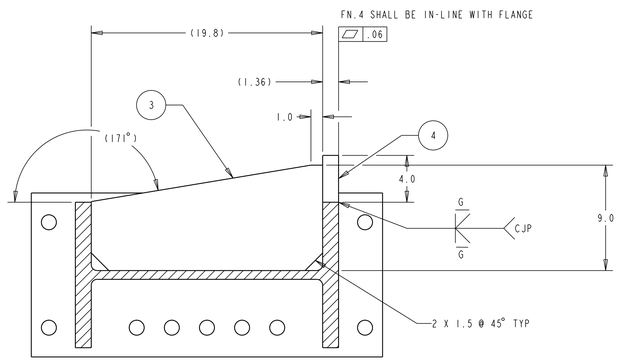

SECTION C - C
SEE SHEET 1
SCALE 0.200

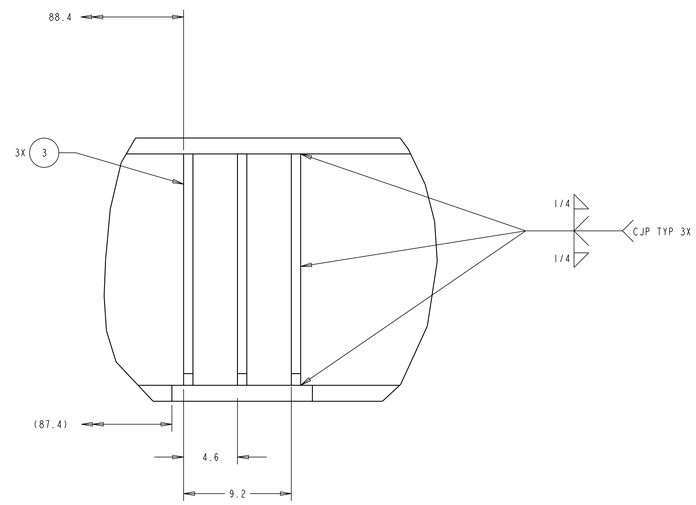

DETAIL B
SEE SHEET 1
SCALE 0.200

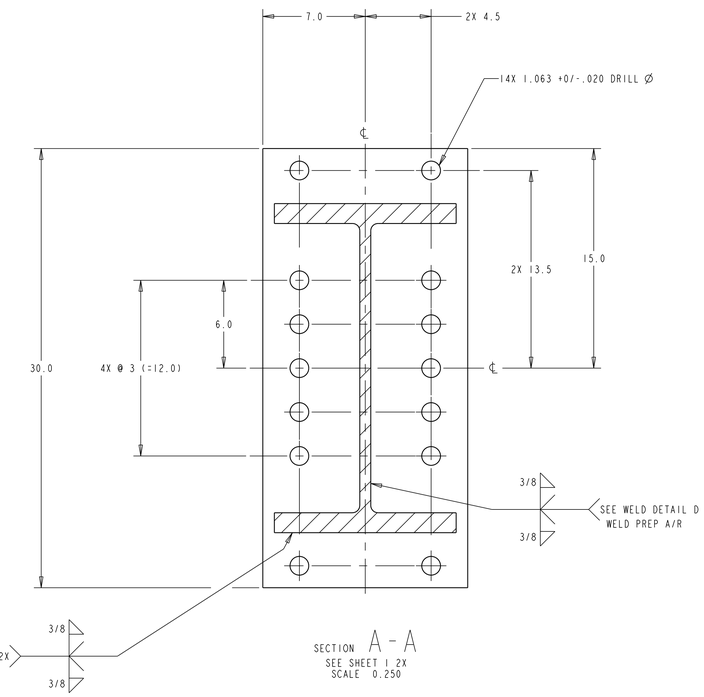

SECTION A - A
SEE SHEET 1 2X
SCALE 0.250

- PRELIMINARY -
THIS DRAWING HAS NOT COMPLETED THE REVIEW PROCESS AND IS SUBJECT TO CHANGE.
07-11-14
DATE

APPROVED FOR PUBLIC RELEASE; DISTRIBUTION IS UNLIMITED

CROSS BRACE WELDMENT
1 KICK RING
SLS ENGINE SECTION
TEST

SPECIAL TEST EQUIPMENT
DESIGN BRANCH - ET50
GEORGE C. MARSHALL
SPACE FLIGHT CENTER
NATIONAL AERONAUTICS
AND SPACE ADMINISTRATION
HUNTSVILLE, ALABAMA

90M14440 REVISION SEE SHT1

DWG SIZE E SHEET 2 OF 2