NOTICE - WHEN GOVERNMENT DRAWINGS, SPECIFICATIONS, OR OTHER DATA ARE USED FOR ANY PURPOSE OTHER THAN IN CONNECTION WITH A DEFINITELY RELATED GOVERNMENT PROCUREMENT OPERATION, THE UNITED STATES GOVERNMENT THEREBY INCURS NO RESPONSIBILITY NOR ANY OBLIGATION WHATSOEVER; AND THE FACT THAT THE GOVERNMENT MAY HAVE FORMULATED, FURNISHED, OR IN ANY WAY SUPPLIED THE SAID DRAWINGS, SPECIFICATIONS OR OTHER DATA IS NOT TO BE REGARDED BY IMPLICATION OR OTHERWISE AS IN ANY MANNER LICENSING THE HOLDER OR ANY OTHER PERSON OR CORPORATION, OR CONVEYING ANY RIGHTS OR PERMISSION TO MANUFACTURE, USE, OR SELL ANY PATENTED INVENTION THAT MAY IN ANY WAY BE RELATED THERETO.

REVISIONS

SYM	DESCRIPTION	DATE	APPROVAL

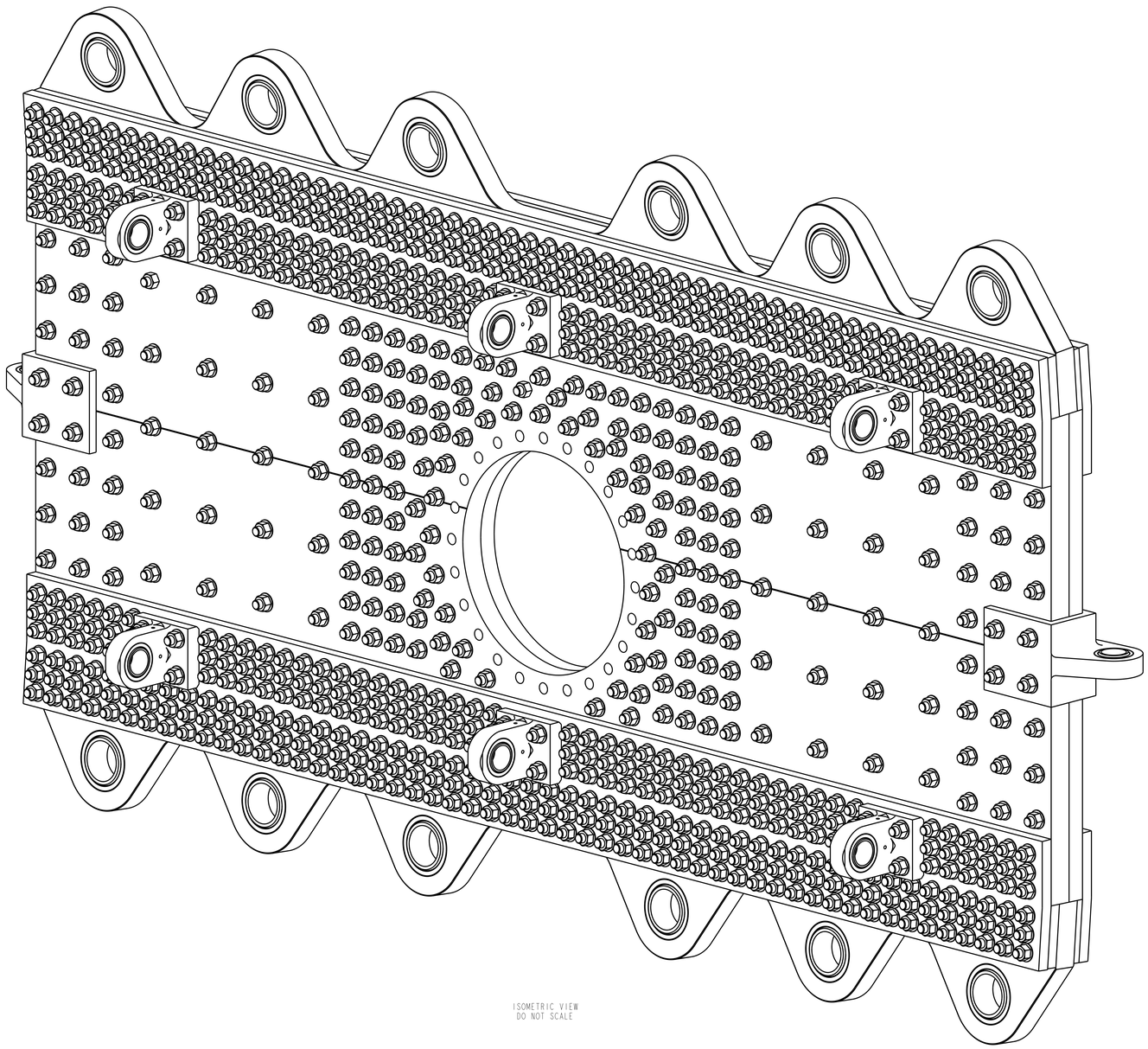

ISOMETRIC VIEW
DO NOT SCALE

UNLESS OTHERWISE SPECIFIED:

1. REMOVE ALL BURRS AND BREAK ALL SHARP EDGES.
2. 250/ ALL MACHINED SURFACES.
   500/ ALL EDGES OF CUT PLATES AND ENDS OF AISC SHAPES.
3. DIMENSIONING AND TOLERANCING IN ACCORDANCE WITH ASME Y14.5-1994.
4. STENCIL PART NUMBER IN THE APPROXIMATE LOCATION SHOWN USING A CONTRASTING COLOR AND 2" TALL LETTERS.
5. EXCEPT WHERE NOTED, MACHINE PART TO WITHIN 0.10" ± .03" OF FINAL DIMENSIONS AND HEAT TREAT PER AMS-H-6875B TO 150-180 KSI ULTIMATE TENSILE STRENGH (UTS). NO TENSILE SPECIMENS REQUIRED. IN THE AREA(S) INDICATED, AND USING SUITABLE METHODS THAT DO NOT GENERATE SUFFICIENT HEAT TO AFFECT THE HARDNESS MEASUREMENT, REMOVE SURFACE SCALE TO EXPOSE PARENT MATERIAL. PREPARE SURFACE AS REQUIRED AND PERFORM A ROCKWELL SURFACE HARDNESS TO VERIFY THE TARGET UTS.

   IF THE MEASURED UTS IS BELOW 150 KSI, THEN THE HEAT TREAT PROCESS MAY BE REPEATED. IF THE UTS IS ABOVE 180 KSI, THE PART SHALL NOT BE HEAT TREATED A SECOND TIME. REPRESENTATIVES FROM NASA STRESS AND MATERIALS ORGANIZATIONS WILL EVALUATE THE USABILITY OF THE PART.

   WRITTEN CERTIFICATION OF THE HARDNESS TESTS, THE CALCULATED UTS AND PART NUMBER SERIALIZATION SHALL BE PROVIDED FOR EACH PART PRODUCED AND SHALL BE TRACEABLE TO MATERIAL CERTIFICATION.
6. PAINT ALL EXPOSED SURFACES USING THE FOLLOWING FINISH: PREPARE SURFACES, ABRASIVE CLEANING WHERE NECESSARY, THEN POLYURETHANE PRIME AND TOP COAT USING SHERWIN WILLIAMS POLANE F63. FINISH COLOR ORANGE NO. 12246 PER FED-STD-595C.

   DO NOT PAINT MACHINED OR OTHER INDICATED SURFACES. DO NOT PAINT HOLES OR THREADS. AREAS DAMAGED DURING ASSEMBLY OR INSTALLATION SHALL BE TOUCHED UP AFTER DELIVERY USING BRUSH OR ROLLER ONLY. PROTECT UNPAINTED SURFACES WITH TRI-FLOW TO PREVENT CORROSION.

   SUBSTITUTIONS FOR PAINT TYPE, COLOR SHADE, OR PROTECTIVE COATING MAY BE PERMITTED WITH NASA ENGINEERING APPROVAL.
7. INSTALL PER MANUFACTURER'S INSTRUCTIONS.
8. LUBRICATE FASTENER THREADS WITH CONOCO HD#2 GREASE. TORQUE BOLTS IN ACCORDANCE WITH MSFC-STD-486B IN THREE STEPS: 400-500FT-LBS, 900-1000FT-LBS AND 1400-1475FT-LBS. REMOVE EXCESS LUBRICANT WITH A LINT-FREE CLOTH.
9. HOLE PATTERN INTERRUPTED BY SRB PY BRACKET HOLES: NO HOLES UNDER SRB PY BRACKETS. PATTERN OTHERWISE CONTINUES ALONG PART.
10. FIND NUMBERS 18 & 19 ARE ACCEPTABLE ALTERNATIVES FOR FIND NUMBERS 2 & 3 WHEN STACKED PER SHEET 4, MAIN PLATES ALTERNATE BUILDUP.
11. PROCEDURE: USING GAGE DEPTH OF BUILDUP OF FIND NUMBERS -2/-3 (OR ALTERNATELY FIND NUMBERS -19/-18/-19), ESTABLISH AND RECORD THE LOCATION OF DATUM C BY MARKING A SCRIBED LINE TO WITHIN +/-.010. THIS SCRIBED LINE WILL SUBSEQUENTLY BE USED AS DATUM C.
12. MINIMALLY BREAK EDGES OF F/Ns -2 & -3 (OR ALTERNATELY -19s) LOCALLY TO ASSURE FLUSH FIT OF F/N -9, DATUM [Y]. SHIM F/N -9, SIDE OPPOSITE DATUM [X], .063 MAX, TO FIT.
13. TORQUE BOLTS STARTING AT DATUM [D], WORKING RADIALLY OUTWARD OR STARTING AT DATUM [B] WORKING OUTWARD EQUALLY PER SIDE.
14. STEEL STAMP AS / WHERE SHOWN USING .25" HIGH CHARACTERS
15. BEFORE PAINTING, PROOF LOAD TO 150% OF TENSILE LOAD MAX GIVEN IF PART IS FABRICATED FROM WELDED PLATE. INSPECT WELDS USING MAGNETIC PARTICAL TESTING PER ASTM E 1444 AFTER PROOF LOAD TEST USING WELD INSPECTION CRITERIA SPECIFIED FOR A MSFC-SPEC-3679, CLASS B WELD.

- PRELIMINARY -
THIS DRAWING HAS NOT COMPLETED THE REVIEW PROCESS AND IS SUBJECT TO CHANGE.
07-17-14
DATE

	FIND NO.	CALLOUT SHT NO.	DETAIL SHT NO.	TOT REQ'D		PART NO.	DESCRIPTION	VEND NO.	REMARKS
10	19	4	4	AR	F	90M13944-19	PLATE, INTERFACE, MAIN, ALTERNATE		2.5" THK STK STEEL PER ASTM A514, GRADE 100
10	18	4	4	AR	F	90M13944-18	PLATE, BACKUP, MAIN, ALTERNATE		2.0" THK STK STEEL PER ASTM A514, GRADE 100
6	17	5		8	P	90M13944-17	BEARING, SPHERICAL, 4.0" PIN DIA	1	P.N. B64-L (RBC)
6	16	2		12	P	90M13944-16	BEARING, SPHERICAL, 6.5" PIN DIA	1	P.N. B104-9L (RBC)
	15	6		828	P	90M13944-15	1-1/2-6UNC-2B HEX NUT		GRADE 8, ZINC PLATED
	14	6		1656	P	90M13944-14	1-1/2" FLAT WASHER, ALLOY STEEL		
	13	6		24	P	90M13944-13	1-1/2 -6UNC-2A HX HD CAP SCRW, 13.5" GRIP x 16.00 LG		GRADE 8, ZINC PLATED
	12	6		582	P	90M13944-12	1-1/2 -6UNC-2A HX HD CAP SCRW, 11.0" GRIP x 13.50 LG		GRADE 8, ZINC PLATED
	11	6		8	P	90M13944-11	1-1/2 -6UNC-2A HX HD CAP SCRW, 10.0" GRIP x 12.50 LG		GRADE 8, ZINC PLATED
	10	6		214	P	90M13944-10	1-1/2 -6UNC-2A HX HD CAP SCRW, 7.0" GRIP x 9.50 LG		GRADE 8, ZINC PLATED
	9	2	5	2	F	90M13944-9	SWIVEL EYE BRACKET, SRB PZ		4340 STEEL, HT TO 150-180KSI
	8	2	5	6	F	90M13944-8	SWIVEL EYE BRACKET, SRB PY		4340 STEEL, HT TO 150-180KSI
	7	2	4	4	F	90M13944-7	PLATE, CLAMP, ANGLED		ASTM A514, GRADE 100
	6	2	4	2	F	90M13944-6	PLATE, FILLER		ASTM A514, GRADE 100
	5	2	4	2	F	90M13944-5	PLATE, FILLER		ASTM A514, GRADE 100
	4	2	4	2	F	90M13944-4	PLATE, INTERFACE, SRB PX LUG		ASTM A514, GRADE 90
10	3	2	4	1	F	90M13944-3	PLATE, BACKUP, MAIN	2	4.0" THK STK, 130ksi YIELD STRENGTH STEEL
10	2	2	4	1	F	90M13944-2	PLATE, INTERFACE, MAIN	2	3.0" THK STK, 130ksi YIELD STRENGTH STEEL
	1		2, 6	-	A	90M13944-1	ASSEMBLY, LOAD BEAM, SRB PX/PY/PZ, SLS INTERTANK TEST		

A=ASSEMBLY/INSTALLATION E=EXISTING F=FABRICATED ITEM M=MODIFIED ITEM P=PURCHASED ITEM

SUGGESTED VENDOR:

1. APPLIED INDUSTRIAL TECHNOLOGY
   2408 E. WILLOW STREET
   SCOTTSBORO, AL
   (256) 259-1445
2. LEECO STEEL, LLC.
   O'NEAL INDUSTRIAL METALS GROUP
   2605 EAST 39TH STREET
   CHATTANOOGA, TN
   (423)-475-5643

STRESS	DATE	PROGRAM MANAGER	DATE
MATERIALS	DATE	TEST ENGINEER/REQUESTER	DATE
INDUSTRIAL SAFETY	DATE	ET50 CONTRACTOR DESIGN LEAD	DATE
SAFETY AND MISSION ASSURANCE	DATE	ET50 CIVIL SERVICE LEAD	DATE
FLIGHT INTERFACES	DATE	CHECKER	DATE
PRESSURE CERTIFICATION MANAGER	DATE	ET50 BRANCH CHIEF/TEAM LEAD	DATE

UNLESS OTHERWISE SPECIFIED
TOLERANCES ARE
FRACTIONS: ± 1/16 ± 1°/2
DECIMALS: .X- ± .06; .XX- ± .03; .XXX- ± .010; ∠- ± 30°
(DIMENSIONS ARE IN INCHES, DO NOT SCALE DRAWING)

DRAWN BY	NEXT ASSEMBLY	DATE
CJ NONA	90M13941-1	06-16-14

ASSEMBLY,
LOAD BEAM,
SRB PX/PY/PZ,
SLS INTERTANK TEST

SPECIAL TEST EQUIPMENT DESIGN BRANCH - ET50
GEORGE C. MARSHALL SPACE FLIGHT CENTER
NATIONAL AERONAUTICS AND SPACE ADMINISTRATION
HUNTSVILLE, ALABAMA

90M13944 — REVISION ~

DWG STK E — SHEET 1 OF 6

APPROVED FOR PUBLIC RELEASE; DISTRIBUTION IS UNLIMITED

NOTICE - WHEN GOVERNMENT DRAWINGS, SPECIFICATIONS, OR OTHER DATA ARE USED FOR ANY PURPOSE OTHER THAN IN CONNECTION WITH A DEFINITELY RELATED GOVERNMENT PROCUREMENT OPERATION, THE UNITED STATES GOVERNMENT THEREBY INCURS NO RESPONSIBILITY NOR ANY OBLIGATION WHATSOEVER; AND THE FACT THAT THE GOVERNMENT MAY HAVE FORMULATED, FURNISHED, OR IN ANY WAY SUPPLIED THE SAID DRAWINGS, SPECIFICATIONS OR OTHER DATA IS NOT TO BE REGARDED BY IMPLICATION OR OTHERWISE AS IN ANY MANNER LICENSING THE HOLDER OR ANY OTHER PERSON OR CORPORATION, OR CONVEYING ANY RIGHTS OR PERMISSION TO MANUFACTURE, USE, OR SELL ANY PATENTED INVENTION THAT MAY IN ANY WAY BE RELATED THERETO.

REVISIONS			
SYM	DESCRIPTION	DATE	APPROVAL

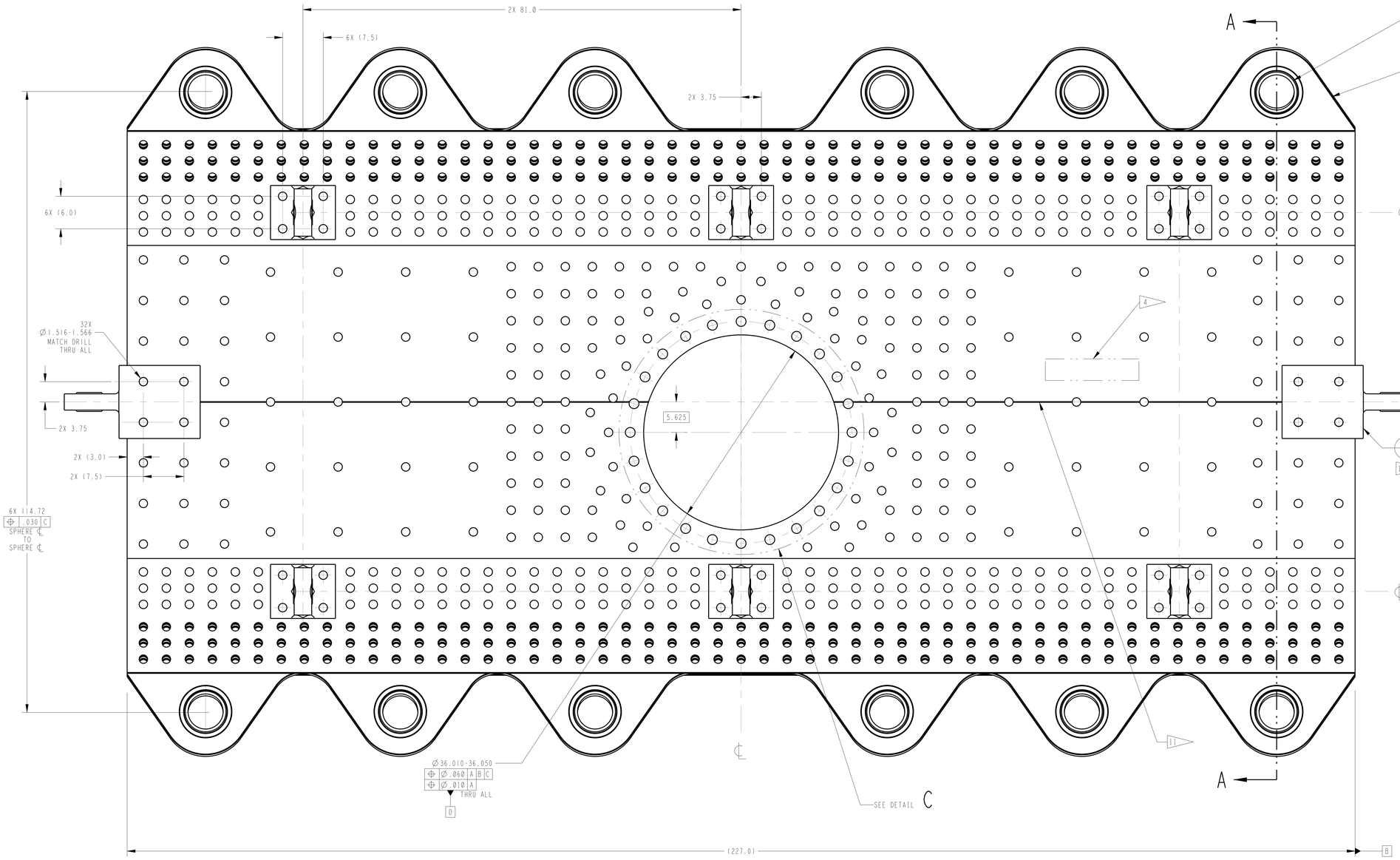

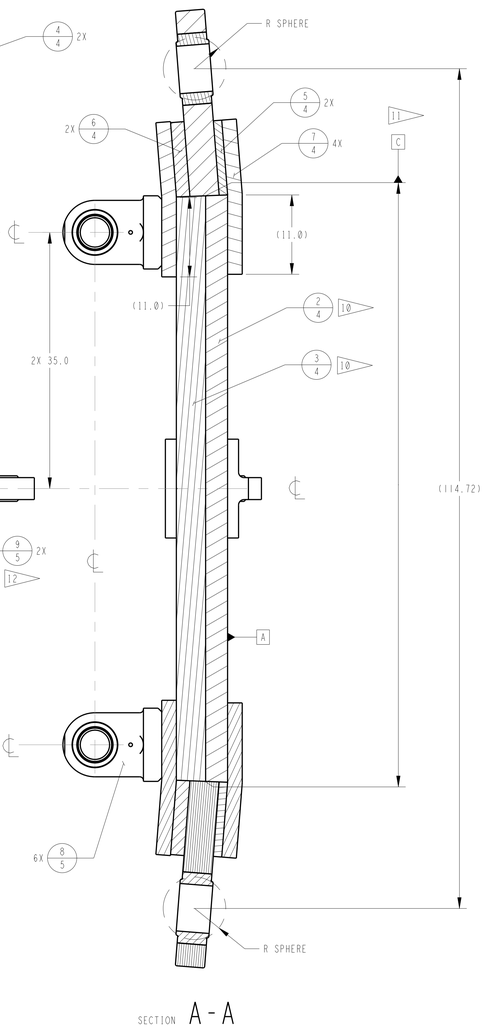

SECTION A-A

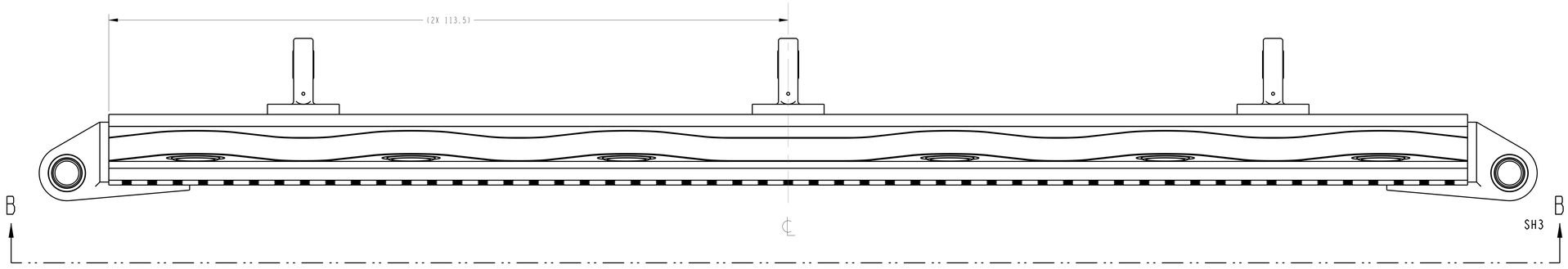

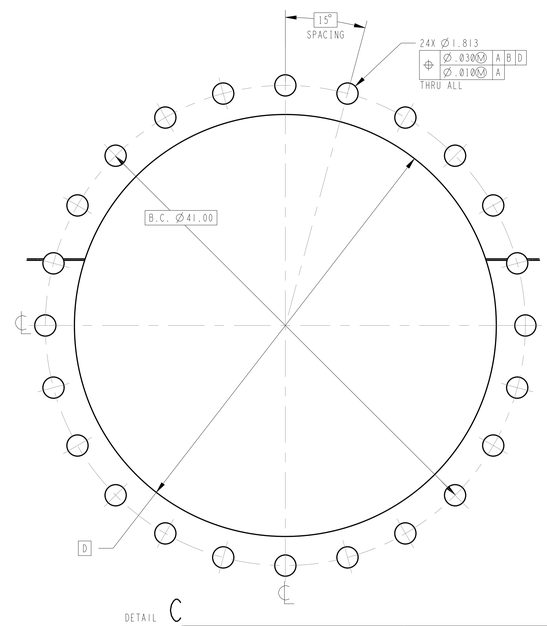

DETAIL C
SCALE 1/5

ASSEMBLY 1

(HARDWARE NOT SHOWN FOR CLARITY)
SCALE 1/8

- PRELIMINARY -
THIS DRAWING HAS NOT COMPLETED THE REVIEW PROCESS AND IS SUBJECT TO CHANGE.
07-11-14
DATE

APPROVED FOR PUBLIC RELEASE; DISTRIBUTION IS UNLIMITED

ASSEMBLY,
LOAD BEAM,
SRB PX/PY/PZ,
SLS INTERTANK TEST

SPECIAL TEST EQUIPMENT DESIGN BRANCH - ET50
GEORGE C. MARSHALL SPACE FLIGHT CENTER
NATIONAL AERONAUTICS AND SPACE ADMINISTRATION
HUNTSVILLE, ALABAMA

90M13944 REVISION SEE SHT1

SIZE E SHEET 2 OF 6

NOTICE - WHEN GOVERNMENT DRAWINGS, SPECIFICATIONS, OR OTHER DATA ARE USED FOR ANY PURPOSE OTHER THAN IN CONNECTION WITH A DEFINITELY RELATED GOVERNMENT PROCUREMENT OPERATION, THE UNITED STATES GOVERNMENT THEREBY INCURS NO RESPONSIBILITY NOR ANY OBLIGATION WHATSOEVER; AND THE FACT THAT THE GOVERNMENT MAY HAVE FORMULATED, FURNISHED, OR IN ANY WAY SUPPLIED THE SAID DRAWINGS, SPECIFICATIONS OR OTHER DATA IS NOT TO BE REGARDED BY IMPLICATION OR OTHERWISE AS IN ANY MANNER LICENSING THE HOLDER OR ANY OTHER PERSON OR CORPORATION, OR CONVEYING ANY RIGHTS OR PERMISSION TO MANUFACTURE, USE, OR SELL ANY PATENTED INVENTION THAT MAY IN ANY WAY BE RELATED THERETO.

REVISIONS			
SYM	DESCRIPTION	DATE	APPROVAL

NOTE: HOLES DETAILED IN THIS VIEW ARE MIRRORED ABOUT DATUM B, AS SHOWN

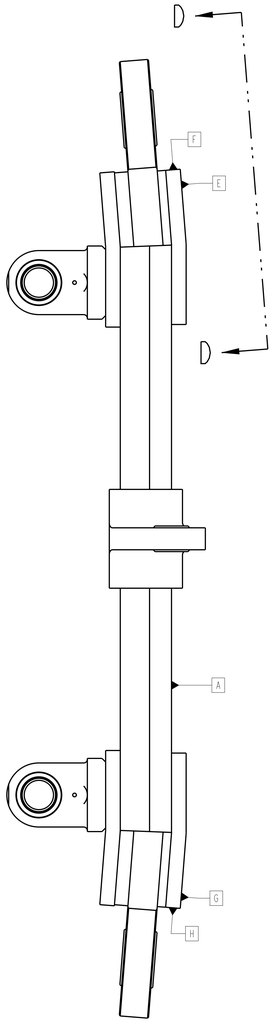

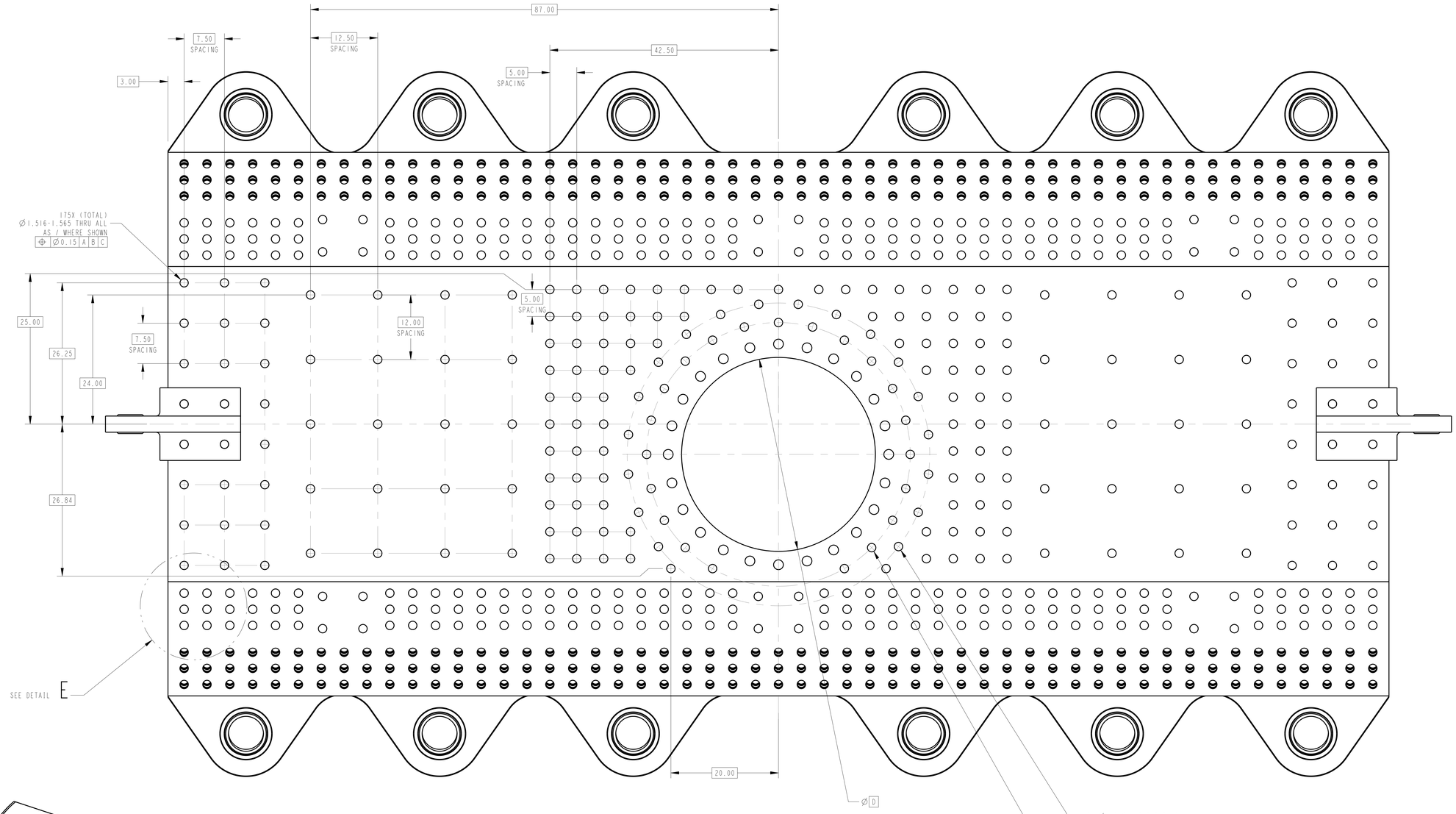

VIEW B-B - SHT2
(HARDWARE NOT SHOWN FOR CLARITY)
SCALE 1/8

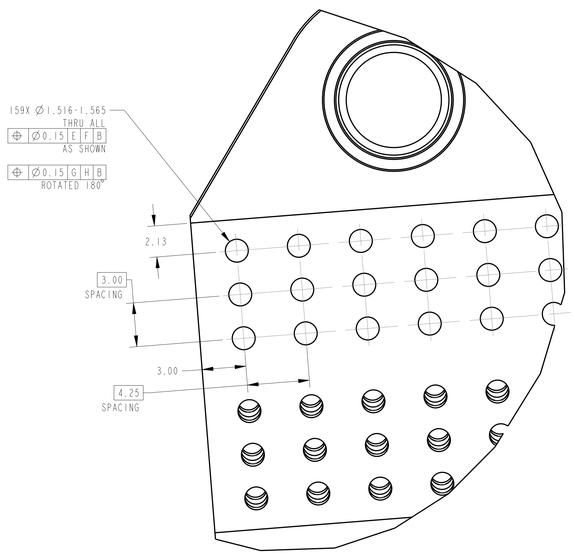

VIEW D-D
SCALE 1/4

1X AS SHOWN
1X ROTATED 180°

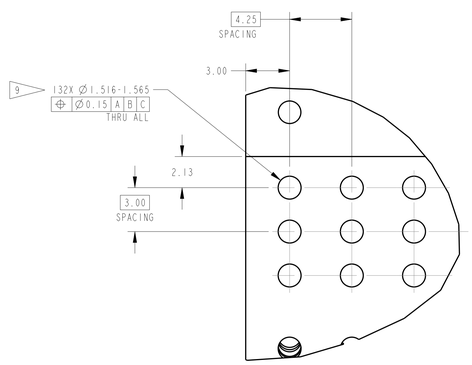

DETAIL E
SCALE 1/4

1X AS SHOWN
1X ROTATED 180°

- PRELIMINARY -
THIS DRAWING HAS NOT COMPLETED THE REVIEW PROCESS AND IS SUBJECT TO CHANGE.
07-17-14
DATE

APPROVED FOR PUBLIC RELEASE; DISTRIBUTION IS UNLIMITED

ASSEMBLY,
LOAD BEAM,
SRB PX/PY/PZ,
SLS INTERTANK TEST

SPECIAL TEST EQUIPMENT DESIGN BRANCH - ET50
GEORGE C. MARSHALL SPACE FLIGHT CENTER
NATIONAL AERONAUTICS AND SPACE ADMINISTRATION
HUNTSVILLE, ALABAMA

90M13944 | REVISION SEE SHT1

DRWG SIZE E | SHEET 3 OF 6

NOTICE - WHEN GOVERNMENT DRAWINGS, SPECIFICATIONS, OR OTHER DATA ARE USED FOR ANY PURPOSE OTHER THAN IN CONNECTION WITH A DEFINITELY RELATED GOVERNMENT PROCUREMENT OPERATION, THE UNITED STATES GOVERNMENT THEREBY INCURS NO RESPONSIBILITY NOR ANY OBLIGATION WHATSOEVER; AND THE FACT THAT THE GOVERNMENT MAY HAVE FORMULATED, FURNISHED, OR IN ANY WAY SUPPLIED THE SAID DRAWINGS, SPECIFICATIONS OR OTHER DATA IS NOT TO BE REGARDED BY IMPLICATION OR OTHERWISE AS IN ANY MANNER LICENSING THE HOLDER OR ANY OTHER PERSON OR CORPORATION, OR CONVEYING ANY RIGHTS OR PERMISSION TO MANUFACTURE, USE, OR SELL ANY PATENTED INVENTION THAT MAY IN ANY WAY BE RELATED THERETO.

REVISIONS			
SYM	DESCRIPTION	DATE	APPROVAL

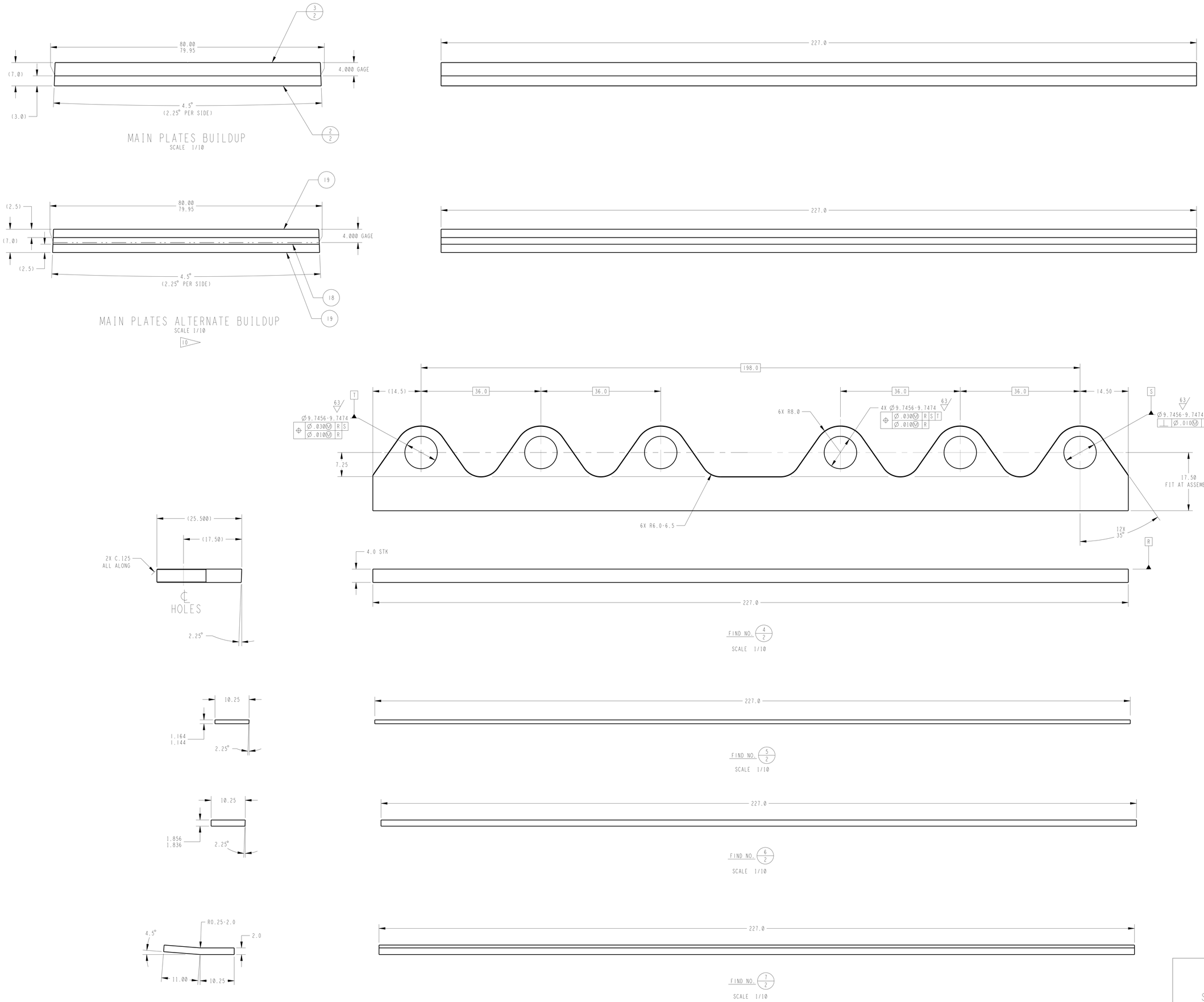

- PRELIMINARY -
THIS DRAWING HAS NOT COMPLETED THE REVIEW PROCESS AND IS SUBJECT TO CHANGE.
07-17-14
DATE

APPROVED FOR PUBLIC RELEASE; DISTRIBUTION IS UNLIMITED

ASSEMBLY,
LOAD BEAM,
SRB PX/PY/PZ,
SLS INTERTANK TEST

SPECIAL TEST EQUIPMENT DESIGN BRANCH - ET50
GEORGE C. MARSHALL SPACE FLIGHT CENTER
NATIONAL AERONAUTICS AND SPACE ADMINISTRATION
HUNTSVILLE, ALABAMA

90M13944 — REVISION SEE SHT1

DRWG TYPE E — SHEET 4 OF 6

NOTICE - WHEN GOVERNMENT DRAWINGS, SPECIFICATIONS, OR OTHER DATA ARE USED FOR ANY PURPOSE OTHER THAN IN CONNECTION WITH A DEFINITELY RELATED GOVERNMENT PROCUREMENT OPERATION, THE UNITED STATES GOVERNMENT THEREBY INCURS NO RESPONSIBILITY NOR ANY OBLIGATION WHATSOEVER; AND THE FACT THAT THE GOVERNMENT MAY HAVE FORMULATED, FURNISHED, OR IN ANY WAY SUPPLIED THE SAID DRAWINGS, SPECIFICATIONS OR OTHER DATA IS NOT TO BE REGARDED BY IMPLICATION OR OTHERWISE AS IN ANY MANNER LICENSING THE HOLDER OR ANY OTHER PERSON OR CORPORATION, OR CONVEYING ANY RIGHTS OR PERMISSION TO MANUFACTURE, USE, OR SELL ANY PATENTED INVENTION THAT MAY IN ANY WAY BE RELATED THERETO.

REVISIONS			
SYM	DESCRIPTION	DATE	APPROVAL

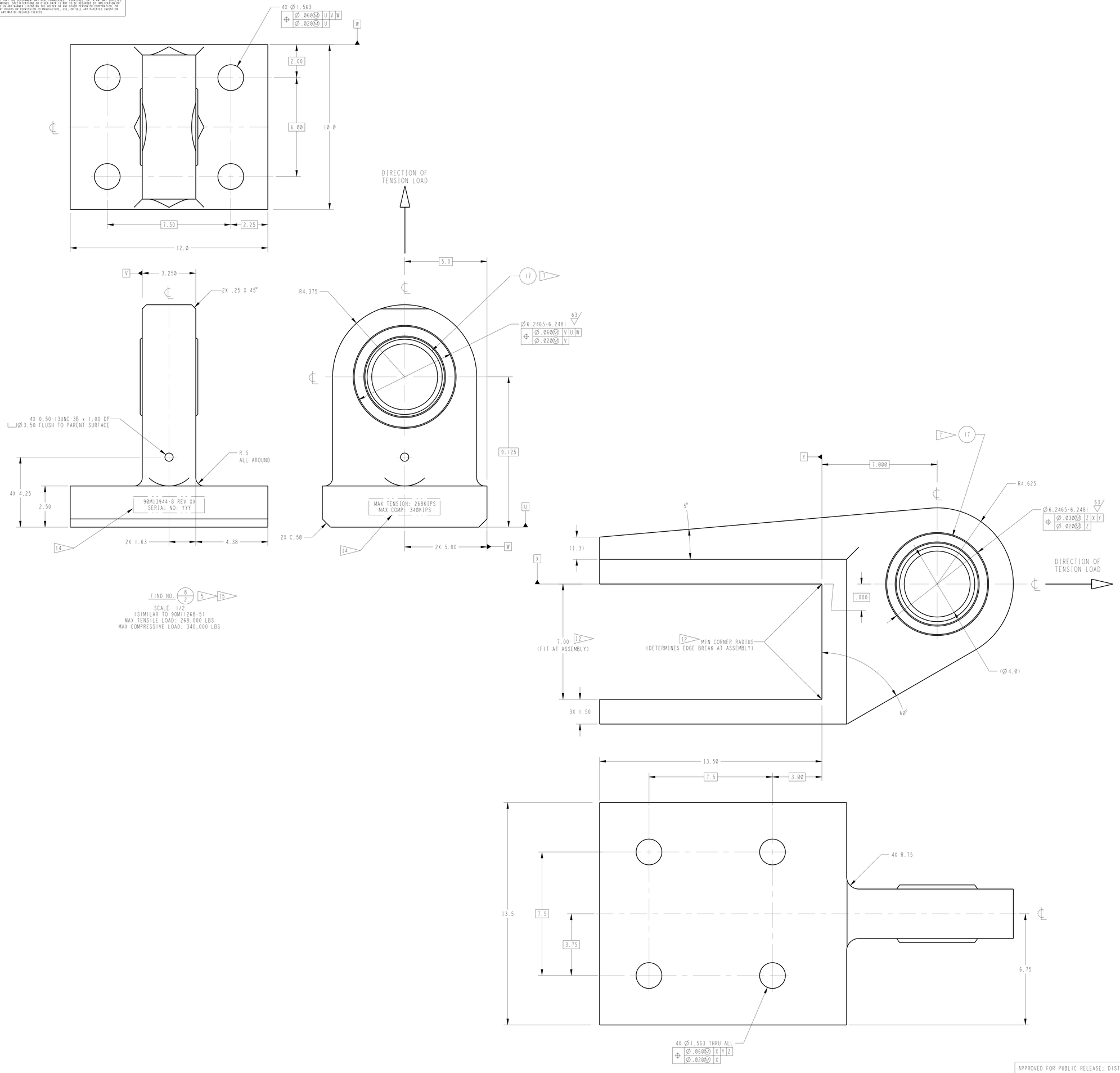

- PRELIMINARY -
THIS DRAWING HAS NOT COMPLETED THE REVIEW PROCESS AND IS SUBJECT TO CHANGE.
07-17-14
DATE

APPROVED FOR PUBLIC RELEASE; DISTRIBUTION IS UNLIMITED

ASSEMBLY,
LOAD BEAM,
SRB PX/PY/PZ,
SLS INTERTANK TEST

SPECIAL TEST EQUIPMENT DESIGN BRANCH - ET50
GEORGE C. MARSHALL SPACE FLIGHT CENTER
NATIONAL AERONAUTICS AND SPACE ADMINISTRATION
HUNTSVILLE, ALABAMA

90M13944 — REVISION SEE SHT1

SIZE E — SHEET 5 OF 6

NOTICE - WHEN GOVERNMENT DRAWINGS, SPECIFICATIONS, OR OTHER DATA ARE USED FOR ANY PURPOSE OTHER THAN IN CONNECTION WITH A DEFINITELY RELATED GOVERNMENT PROCUREMENT OPERATION, THE UNITED STATES GOVERNMENT THEREBY INCURS NO RESPONSIBILITY NOR ANY OBLIGATION WHATSOEVER; AND THE FACT THAT THE GOVERNMENT MAY HAVE FORMULATED, FURNISHED, OR IN ANY WAY SUPPLIED THE SAID DRAWINGS, SPECIFICATIONS OR OTHER DATA IS NOT TO BE REGARDED BY IMPLICATION OR OTHERWISE AS IN ANY MANNER LICENSING THE HOLDER OR ANY OTHER PERSON OR CORPORATION, OR CONVEYING ANY RIGHTS OR PERMISSION TO MANUFACTURE, USE, OR SELL ANY PATENTED INVENTION THAT MAY IN ANY WAY BE RELATED THERETO.

REVISIONS			
SYM	DESCRIPTION	DATE	APPROVAL

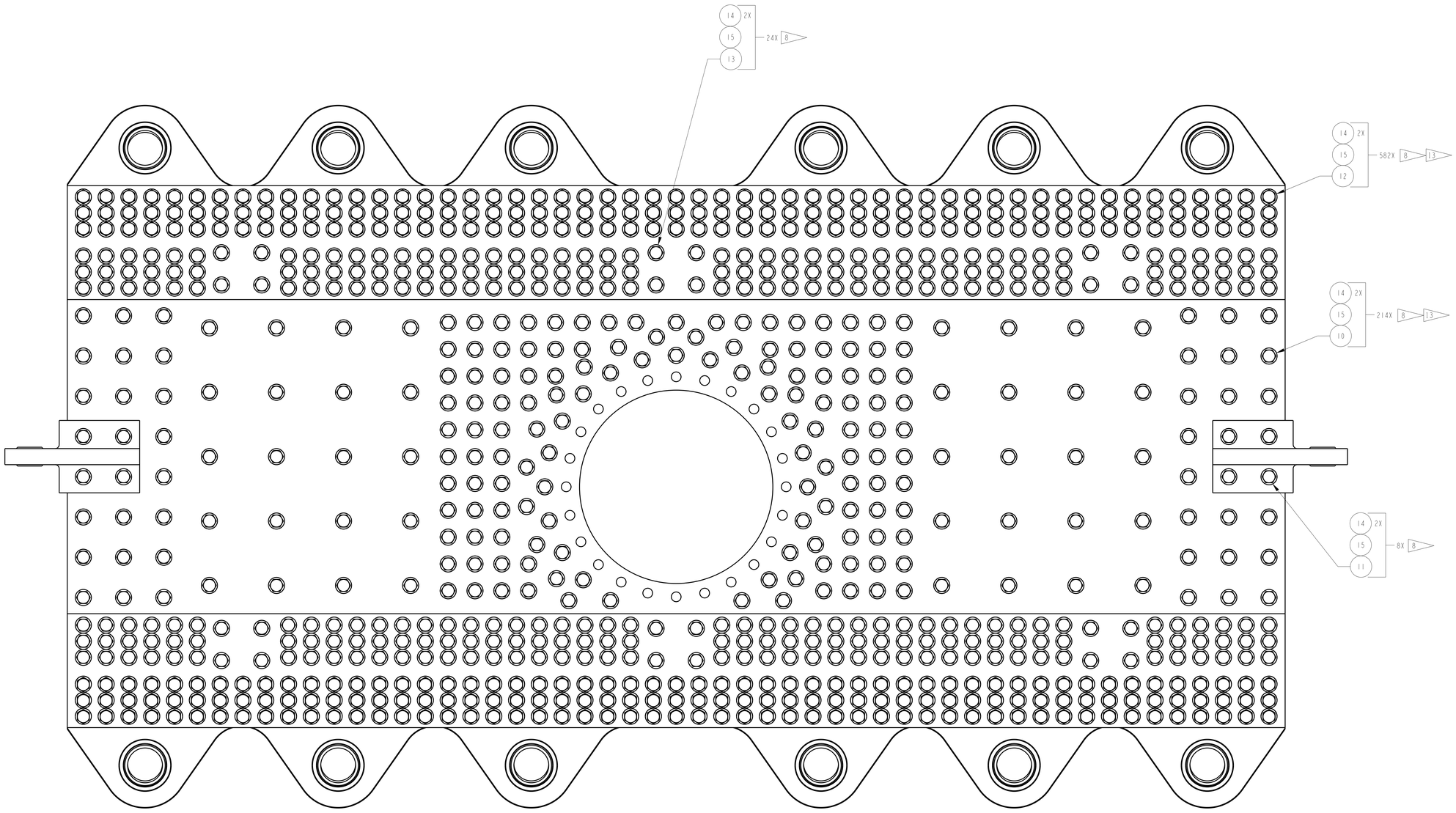

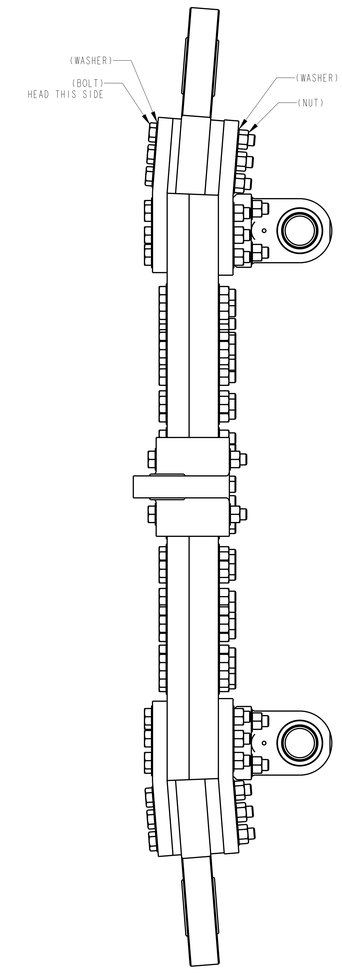

ASSEMBLY (1) HARDWARE LAYOUT

SCALE 1/8

- PRELIMINARY -
THIS DRAWING HAS NOT COMPLETED THE REVIEW PROCESS AND IS SUBJECT TO CHANGE.
07-17-14
DATE

ASSEMBLY,
LOAD BEAM,
SRB PX/PY/PZ,
SLS INTERTANK TEST

SPECIAL TEST EQUIPMENT
DESIGN BRANCH - ET50
GEORGE C. MARSHALL
SPACE FLIGHT CENTER
NATIONAL AERONAUTICS
AND SPACE ADMINISTRATION
HUNTSVILLE, ALABAMA

90M13944 REVISION SEE SHT1

SIZE E SHEET 6 OF 6

APPROVED FOR PUBLIC RELEASE; DISTRIBUTION IS UNLIMITED