Table 1

Line	PN	Drawing Name	Part/Assem/Weld	Fab Quantity
A	B	C	D	E
1	PMA1	Proteus_Maxiumus	Assembly	1
2	PMW1	Proteus Main Plate Weld	Weldment	1
3	PM01	Proteus Main Plate	part	1
4	KF50	KF-NW50 Weld Stub	part	4
5	KF40	KF-NW40 Weld Stub	part	6
6	PMW2	Proteus Top Vac Shell	Weldment	1
7	PM02	Proteus Top Vac Flange	part	1
8	PM04	Proteus Top Vac Wall	part	1
9	PM03	Proteus Top Vac Dome	part	1
10	PMW3	Proteus Bottom Vac She	Weldment	1
11	PM05	Proteus bottom vac flang	part	1
12	PM06	proteus bottom vac wall	part	1
13	PM07	proteus bottom vac dome	part	1
14	PMW4	proteus vac nipple	Weldment	1
15	PM08	proteus vac flange	part	1
16	PM09	proteus vac section 1	part	1
17	PM10	o-ring vac flange	part	1
18	PM11	proteus test cover	part	1
19	PMW5	proteus working shield 50	Weldment	1
20	PM12	50k working shield bottor	part	1
21	PM13	50k working shield wall	part	1
22	PM14	50k working shield termir	part	1
23	PM15	50k shield lid	part	1
24	PMW6	4k working shield	Weldment	1
25	PM16	4k working shield bottom	part	1
26	PM17	4k working shield wall	part	1
27	PM18	4k working shield top flar	part	1
28	PM19	4k shield lid	part	1
29	PMW7	utility shield 50k	Weldment	1
30	PM20	50k utility shield top flang	part	1
31	PM21	50k utility shield wall	part	1
32	PM22	50k utility shield end flan	part	1
33	PM23	50k utility shield lid	part	1
34	PMW8	4k utility shield	Weldment	1
35	PM24	4k utility shield top flange	part	1
36	PM25	4k utility shield wall	part	1
37	PM26	4k utility shield bottom fla	part	1
38	PM27	4k utility shield lid	part	1
39	PM28	main suspension mount t	part	2
40	PM29	front suspension mount t	part	1
41	PM30	outer vert strap	part	6
42	PM31	outer hexapod foot	part	3
43	PM32	outer g10 leg	part	6
44	PM33	hexapod top	part	6
45	PM34	vert strap	part	6
46	PM35	hexapod foot	part	3
47	PM36	25k facet bar	part	3
48	PM37	g10 leg	part	6
49	PM38	4k washer plate	part	1
50	PM39	50k ring	part	1
51	PM40	4k plate	part	1
52	93340A410	key locking threaded inse	insert	44
53	93904A400	key locking threaded inse	insert	72
54	PM41	rear leg bracket	part	2
55	PM42	rear leg	part	2
56	PM43	front leg	part	1
57	PM44	front floor bracket	part	1
58	PM45	rear floor bracket	part	1
59	PM46	floor brace	part	2
60	9008T460	leveling caster	caster	3
61	PM47	connector cover	part	2
62	93715A605	M8x1.25/ M5x0.8 key loc	insert	5

NASA Supplied Drawings

Custom Cryogenic Dewar Assembly

NNG14519760Q

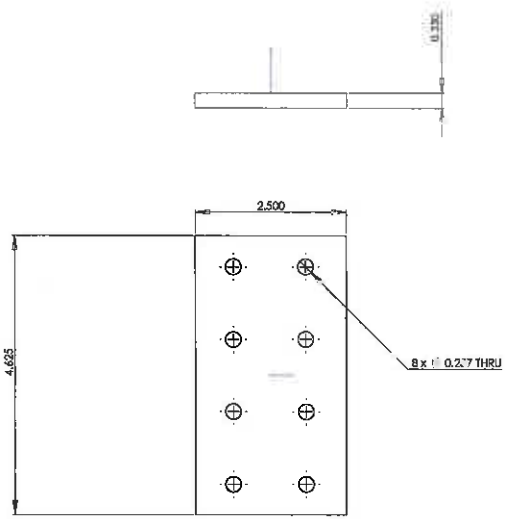

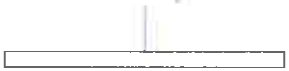

FOLLOW CAD MODEL GEOMETRY EXCEPT AS INDICATED

National Aeronautics and Space Administration

Goddard Space Flight Center
Kogut Group

4K proteus washer plate

Material: AISI 304

Make Quantity: 1

SCALE: 1:1

PN: PM38
REV: A-03

1

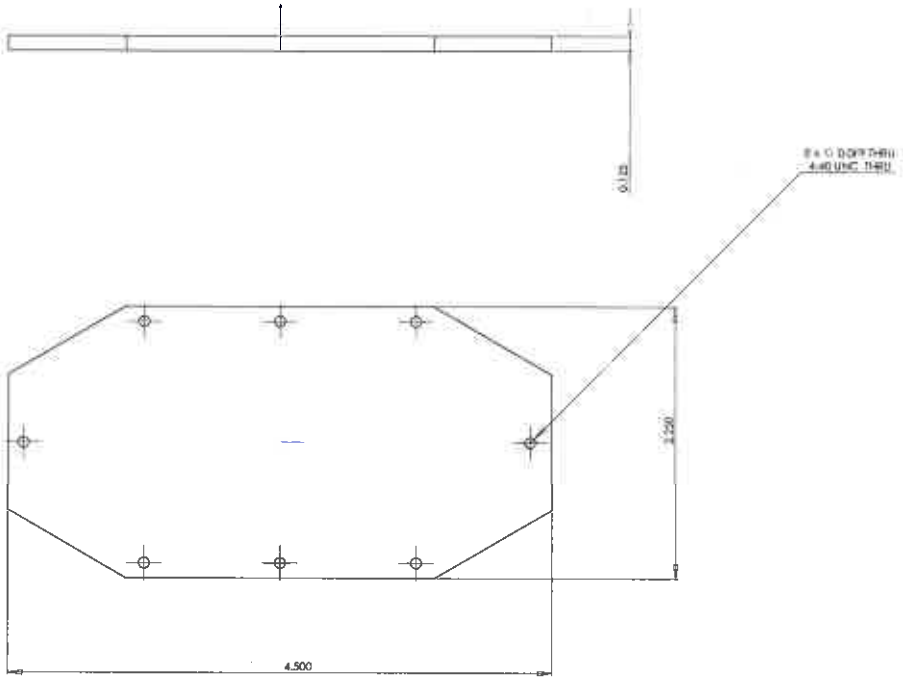

FOLLOW CAD MODEL GEOMETRY EXCEPT AS INDICATED

National Aeronautics and Space Administration

Goddard Space Flight Center
Kogut Group

connector cover

Material: OFHC Copper 101

Make Quantity: 2

SCALE: 2:1

PN: PM47
REV: A-04

2

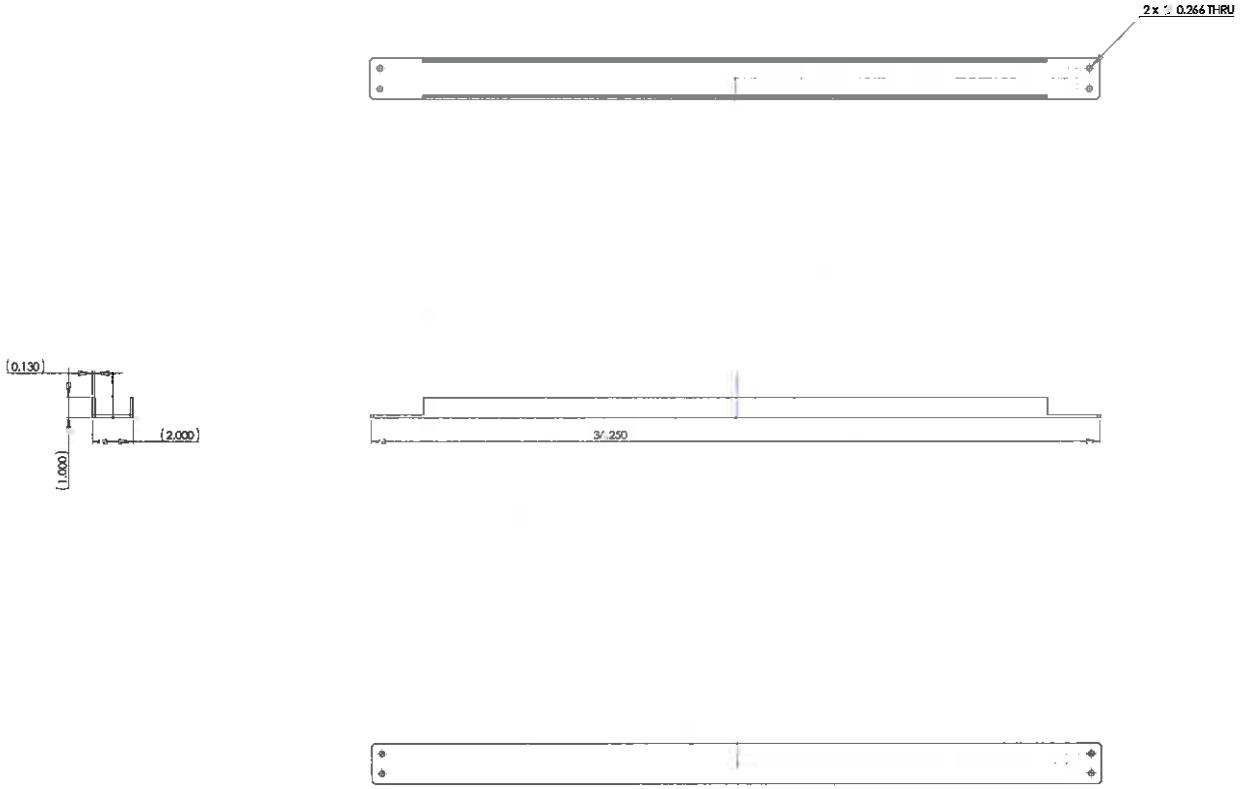

FOLLOW CAD MODEL GEOMETRY EXCEPT AS INDICATED

National Aeronautics and Space Administration

floor brace

Material: 6061-T6 (SS)

Make Quantity: 2

SCALE: 1:3

Goddard Space Flight Center
Kogut Group

PN: PM46
REV: A-08

3

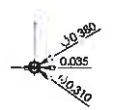

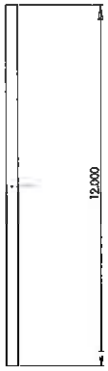

FOLLOW CAD MODEL GEOMETRY EXCEPT AS INDICATED

National Aeronautics and Space Administration

Goddard Space Flight Center
Kogut Group

G10 leg for proteus hexapod

Material: G10, FR4

Blake Quantiliani

SCALE: 1:2

PN: PM37
REV: A-03

4

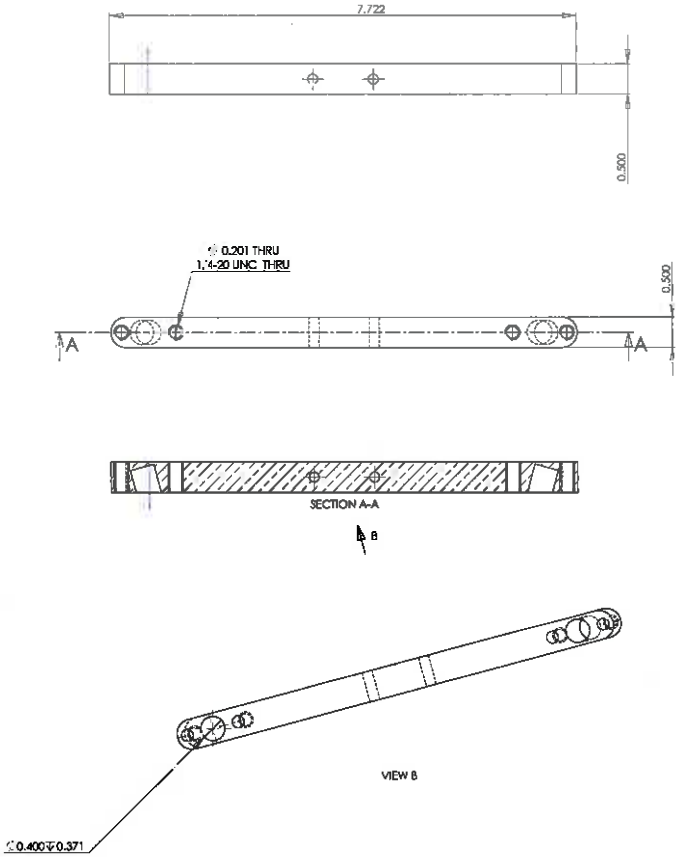

FOLLOW CAD MODEL GEOMETRY EXCEPT AS INDICATED

National Aeronautics and Space Administration

Goddard Space Flight Center
Kogut Group

hexapod foot for proteus

Material: Brass

Mike Quantill

SCALE: 1:1

PN: PM35
REV: A-06

5

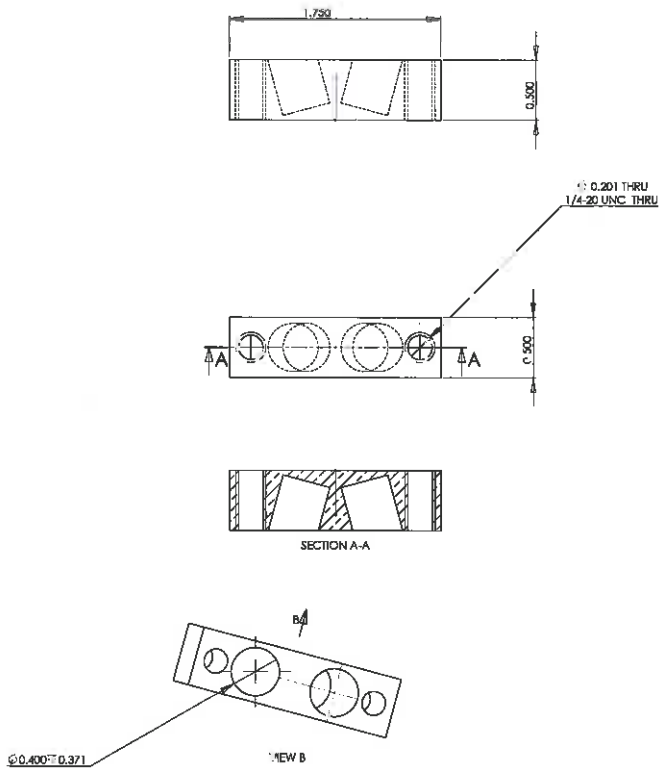

FOLLOW CAD MODEL GEOMETRY EXCEPT AS INDICATED

National Aeronautics and Space Administration

Goddard Space Flight Center
Kogut Group

hexapod top for proteus

Material: Brass

Make Quantity: 6

SCALE: 2:1

PN: PM33
REV: A-04

6

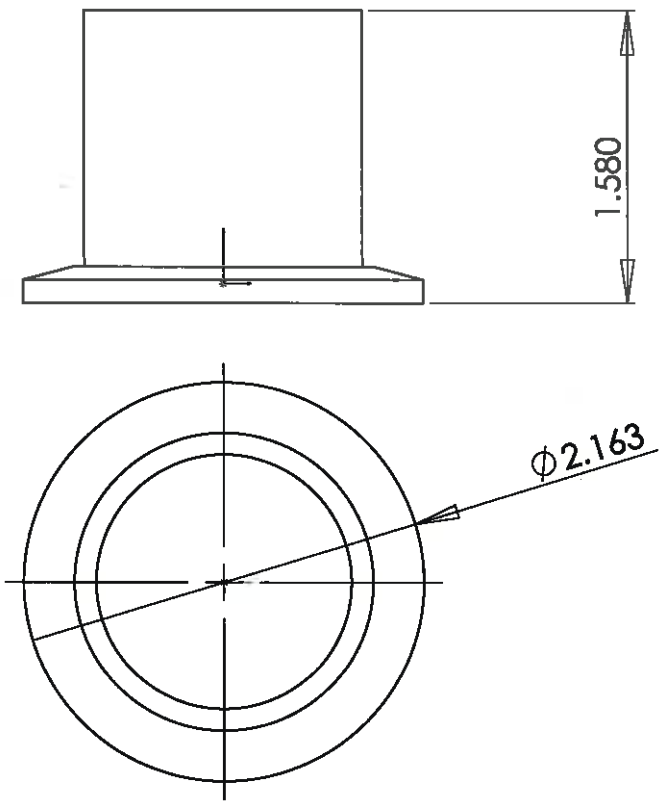

UNLESS OTHERWISE SPECIFIED:

DIMENSIONS ARE IN INCHES
TOLERANCES:
ANGULAR: MACH ± 0.05° BEND ± 0.1°
TWO PLACE DECIMAL ± 0.010
THREE PLACE DECIMAL ± 0.005

CONTACT:

National Aeronautics and Space Administration

Goddard Space Flight Center
Kogut Group

KF-NW40 weld stub

Material: 6061-T6 (SS)

Make Quantity: 6

PN: KF40
REV: A-06

SCALE: 1:1

7

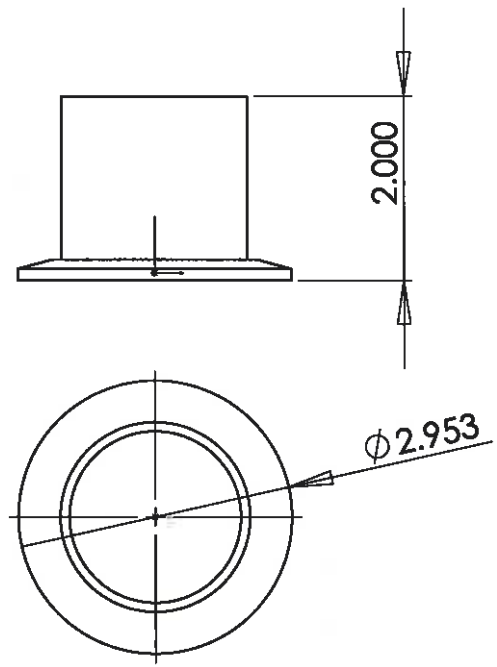

UNLESS OTHERWISE SPECIFIED:

DIMENSIONS ARE IN INCHES
TOLERANCES:
ANGULAR: MACH ± 0.05° BEND ± 0.1°
TWO PLACE DECIMAL ± 0.010
THREE PLACE DECIMAL ± 0.005

CONTACT:

National Aeronautics and Space Administration

Goddard Space Flight Center
Kogut Group

KF-NW50 weld stub

Material: 6061-T6 (SS)

Make Quantity: 4

PN: KF50
REV: A-03

SCALE: 1:2

8

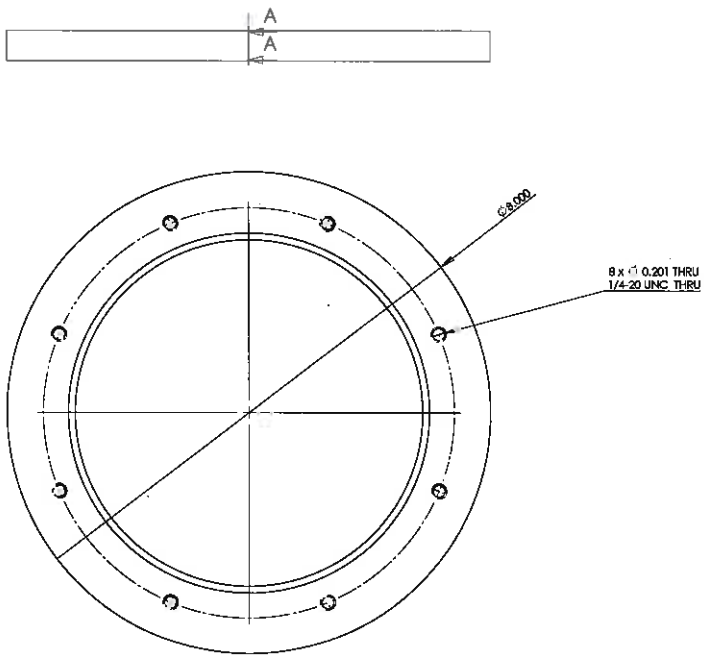

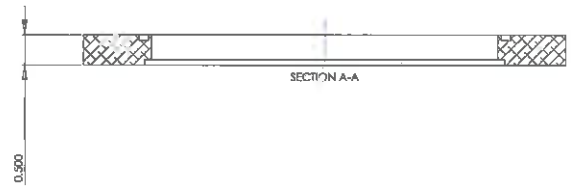

FOLLOW CAD MODEL GEOMETRY EXCEPT AS INDICATED

National Aeronautics and Space Administration

Goddard Space Flight Center
Kogut Group

O-ring Vac Flange

Material: 6061-T6 (SS)

Make Quantity: 1

SCALE: 1:1

PN: PM10
REV: A-03

9

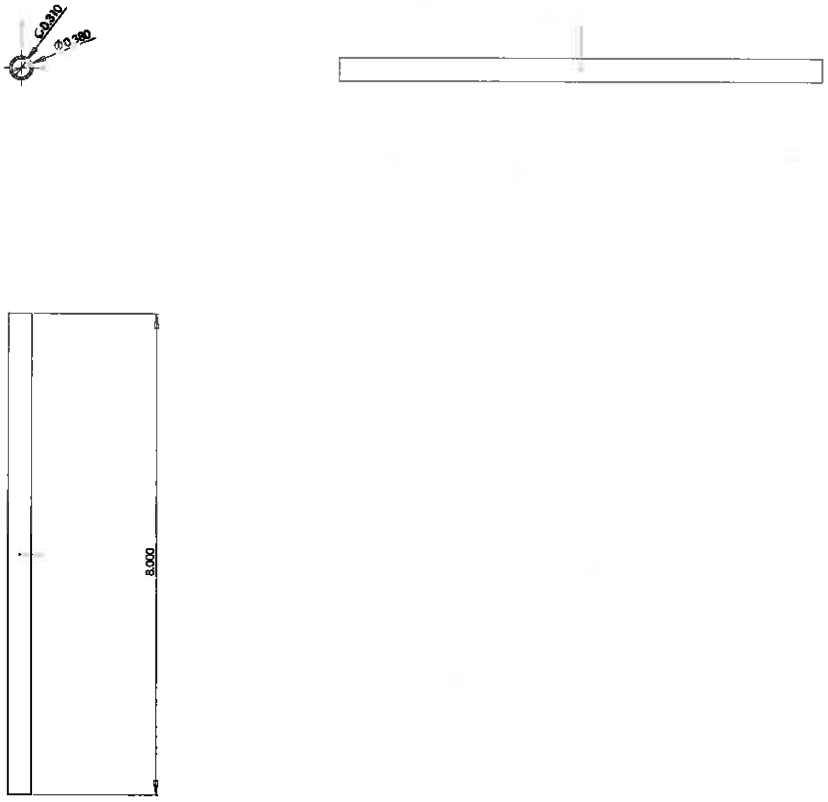

FOLLOW CAD MODEL GEOMETRY EXCEPT AS INDICATED

UNLESS OTHERWISE SPECIFIED:
DIMENSIONS ARE IN INCHES
TOLERANCES:
FRACTIONAL ±
ANGULAR: MACH ± BEND ±
TWO PLACE DECIMAL ±
THREE PLACE DECIMAL ±
FINISH
DO NOT SCALE DRAWING

National Aeronautics and Space Administration

Goddard Space Flight Center
Keyut Group

outer G10 leg for proteus hexapod

Material: G10, FR4

Mike Quanill

SCALE: 1:1

PN: PM32
REV: A-03

10

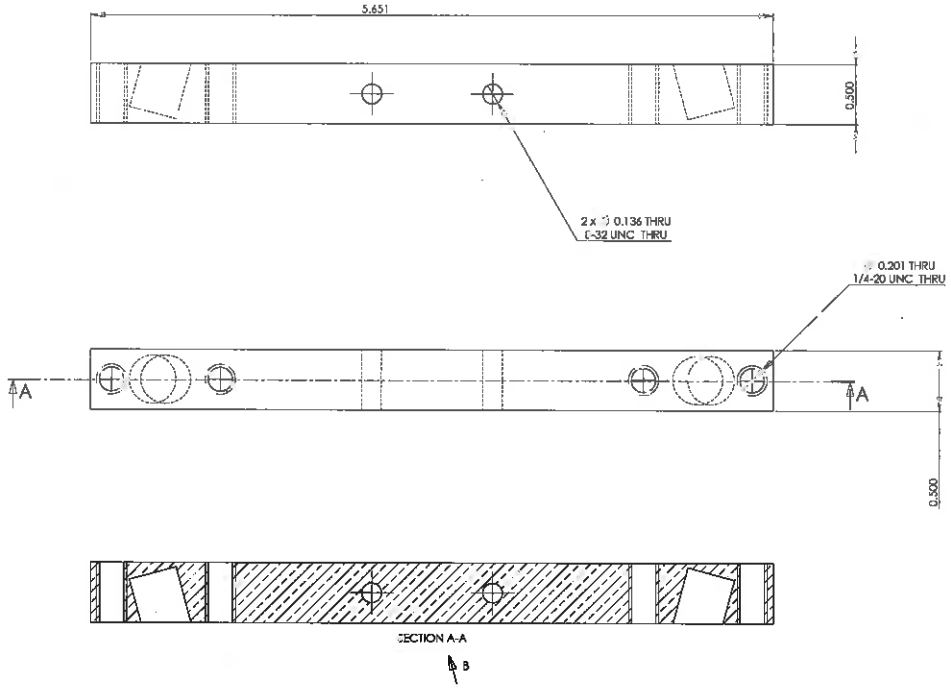

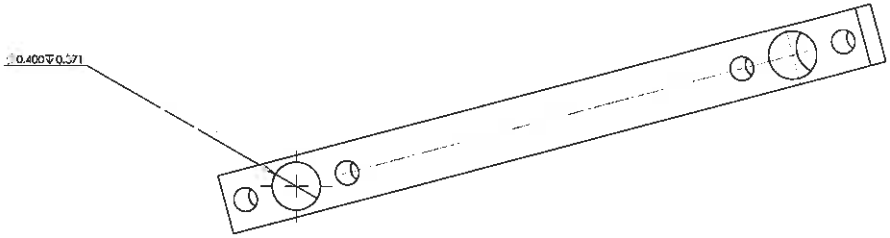

VIEW B

FOLLOW CAD MODEL GEOMETRY EXCEPT AS INDICATED

National Aeronautics and Space Administration

Goddard Space Flight Center
Kogul Group

outer hexapod foot for proteus

Material: Brass

Make Quantity: 3

SCALE: 2:1

PN: PM31
REV: A-03

11

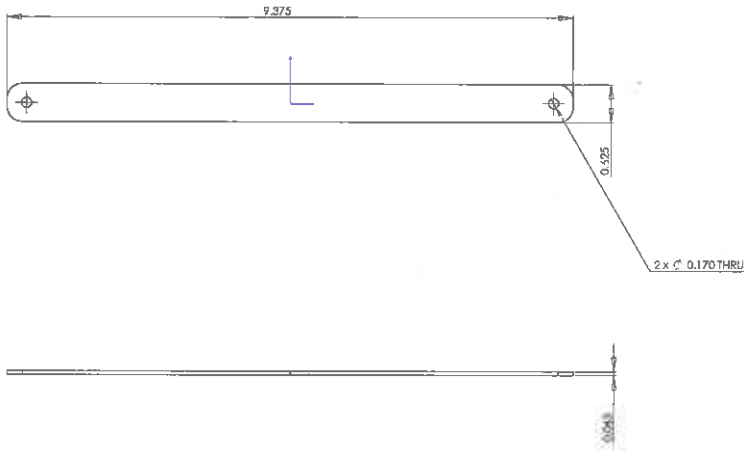

FOLLOW CAD MODEL GEOMETRY EXCEPT AS INDICATED

National Aeronautics and Space Administration

Goddard Space Flight Center
Kogut Group

outer vert strap for protecs

Material: G10/FR4

Make Quantity: 6

SCALE: 1:1

PN: PM30
REV: A-04

12

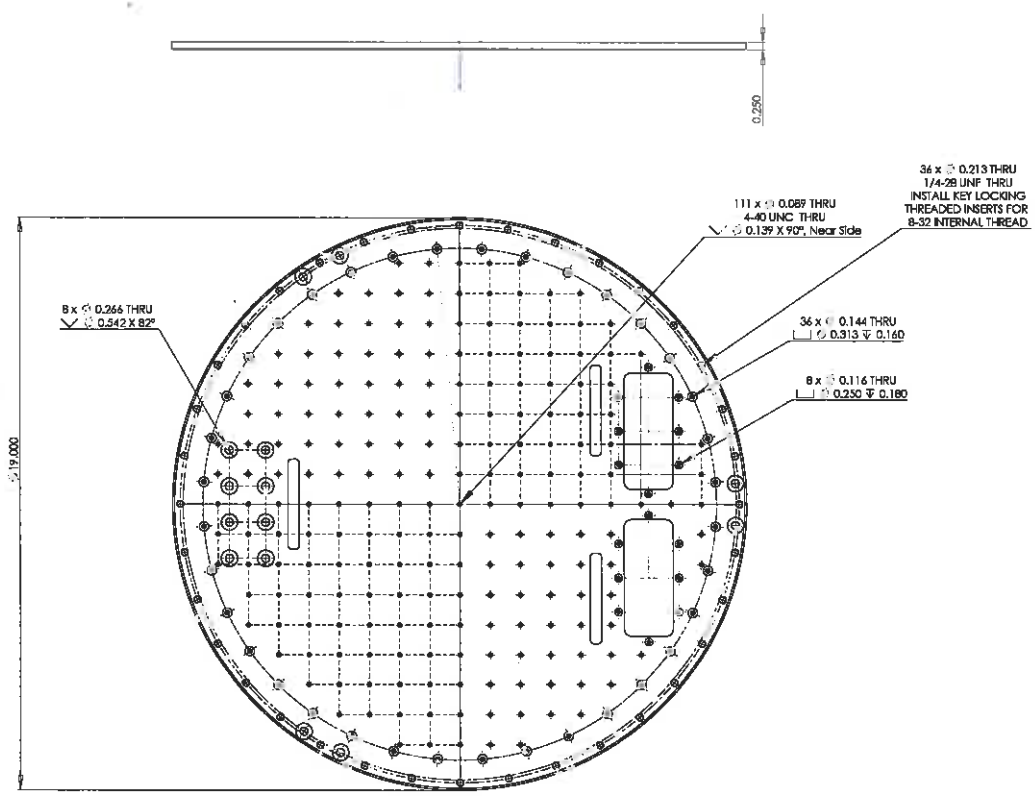

Plating:
No flash or Ti flash or Cu flash for adhesion, (no Ni)
Pure soft Au plating, 50 to 100 microinches thick.

FOLLOW CAD MODEL GEOMETRY EXCEPT AS INDICATED

National Aeronautics and Space Administration

Goddard Space Flight Center
Kogut Group

Dipleus 4K plate

Material: OFHC Copper 101

Make Quantity: 1

SCALE 1:2

PN: PM40
REV: B-02

13

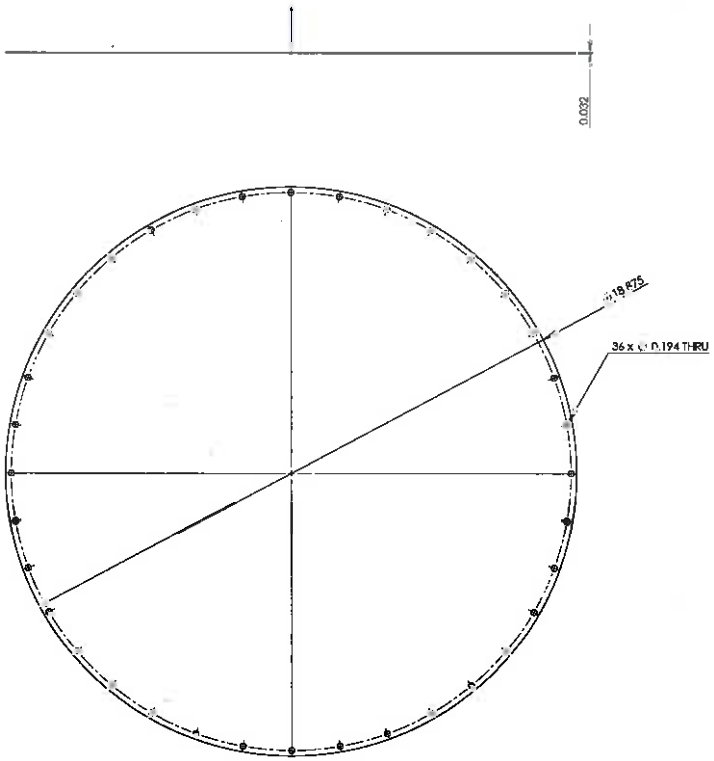

FOLLOW CAD MODEL GEOMETRY EXCEPT AS INDICATED

National Aeronautics and Space Administration

Goddard Space Flight Center
Kogut Group

proteus 4K shield lid

Material: 6061-T6 (SS)

Make Quantity: 1

SCALE: 1:1

PN: PM19
REV: A-06

14

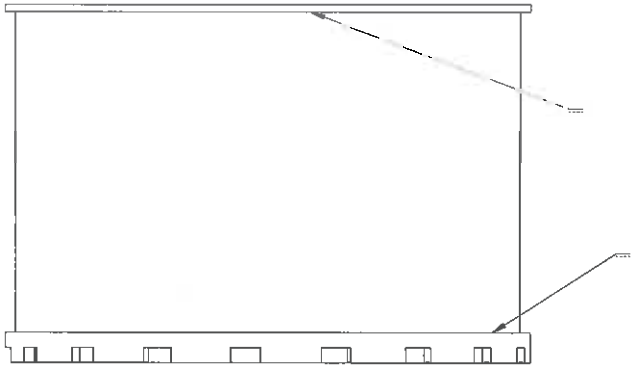

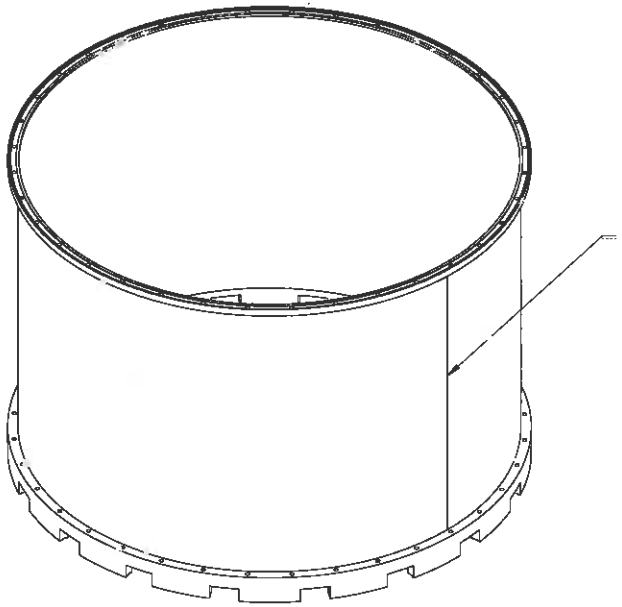

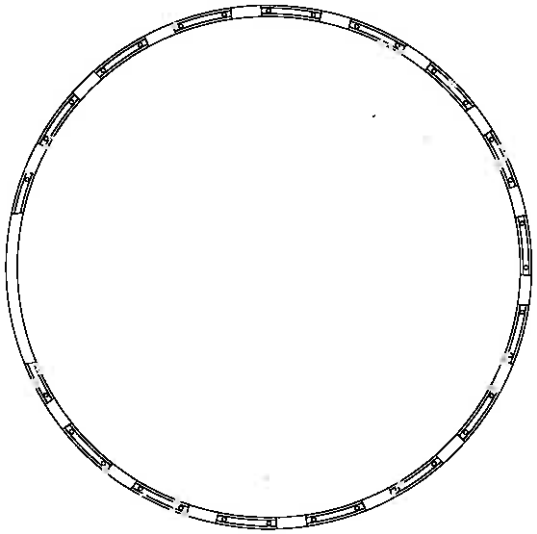

FOLLOW CAD MODEL GEOMETRY EXCEPT AS INDICATED

National Aeronautics and Space Administration

Goddard Space Flight Center Legal Group

proteus 4K utility shield

Material:

Make Quantity: 1

SCALE: 1:2

PN: PMW8
REV: A-08

15

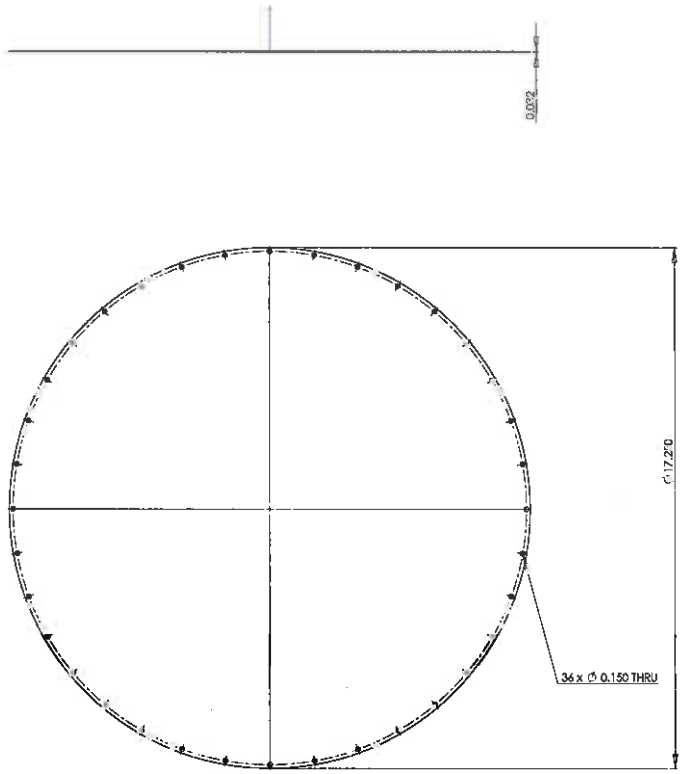

FOLLOW CAD MODEL GEOMETRY EXCEPT AS INDICATED

National Aeronautics and Space Administration

Goddard Space Flight Center
Engul Group

proteus 4K utility shield lid

Material: 6061-T6 (SS)

Make Quantity: 1

SCALE: 1:1

PN: PM27
REV: A-03

16

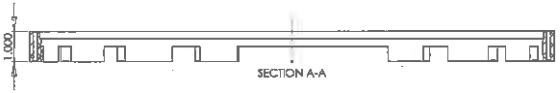

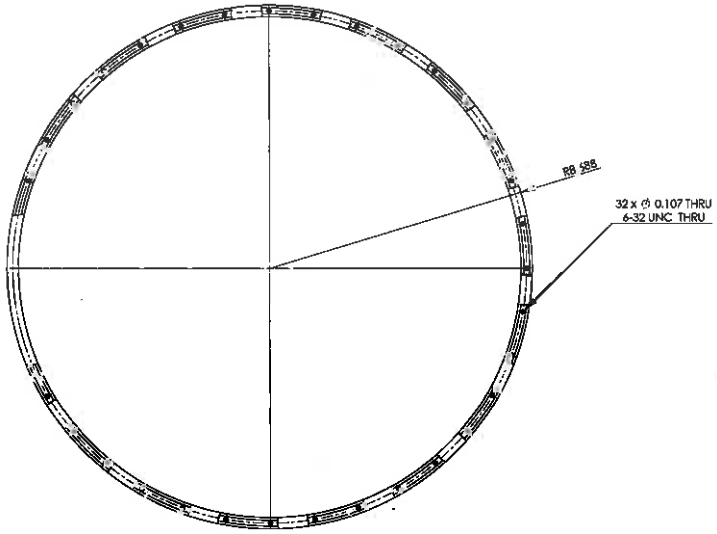

FOLLOW CAD MODEL GEOMETRY EXCEPT AS INDICATED

National Aeronautics and Space Administration

Goddard Space Flight Center
Kogul Group

proteus 4K utility shield top flange

Material: 3061-T6 (SS)

Make Quantity: 1

SCALE: 1:2

PN: PM24
REV: A-07

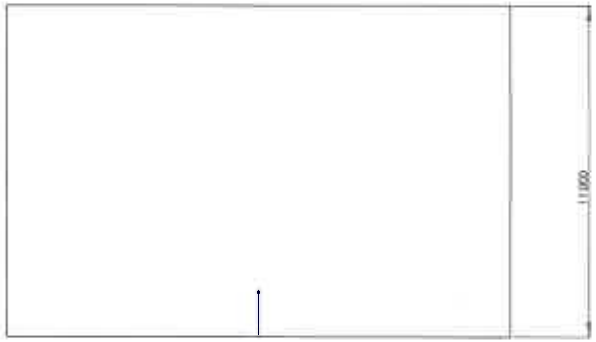

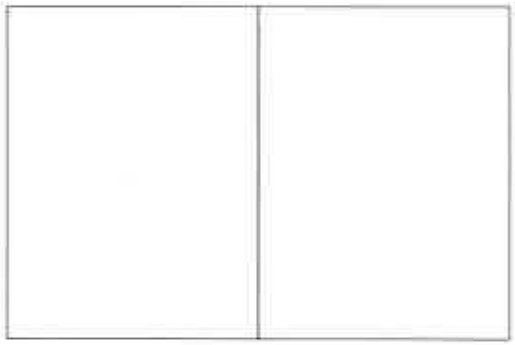

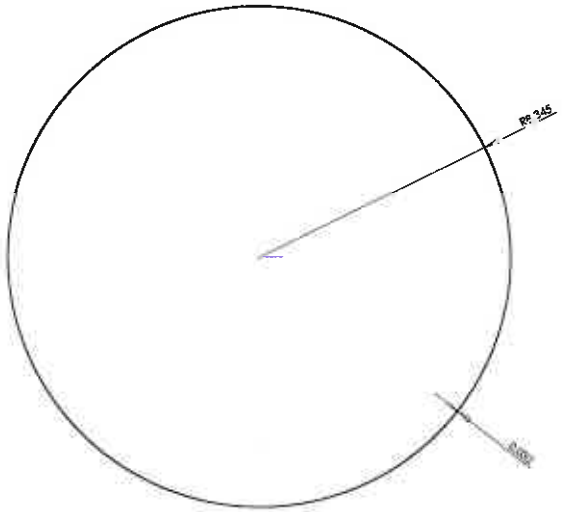

FOLLOW CAD MODEL GEOMETRY EXCEPT AS INDICATED

National Aeronautics and Space Administration

Goddard Space Flight Center
Digital Group

proteus 4K utility shield wall

Material: 6061-T6 (CS)

Make Quantity: 1

SCALE 1:2

PN: PM25
REV: A-08

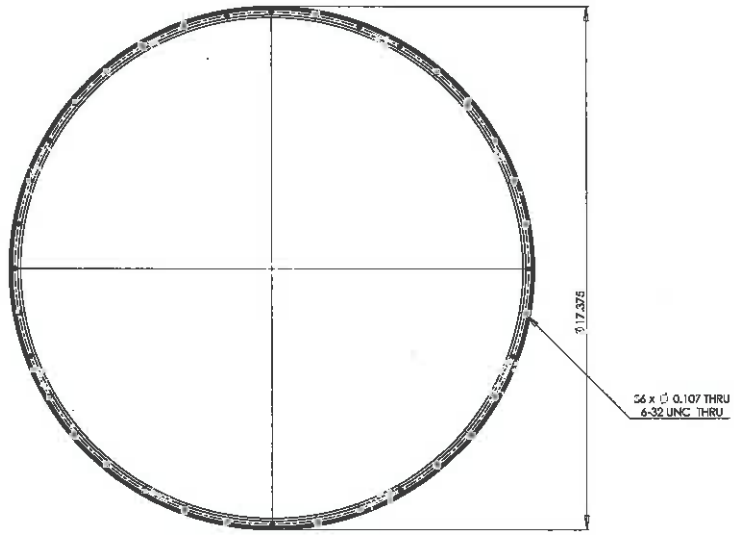

FOLLOW CAD MODEL GEOMETRY EXCEPT AS INDICATED

National Aeronautics and Space Administration

Goddard Space Flight Center
Kogul Group

proteus 4K utility shield bottom flange

Material: 6061-T6 (SS)

Make Quantity 1

SCALE 1:2

PN: PM26
REV: A-03

ITEM NO.	PART NUMBER	QTY.
1	proteus 4K working shield bottom flange	1
2	proteus 4K working shield top flange	1
3	proteus 4K working shield wall	1

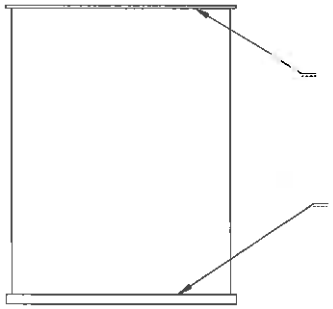

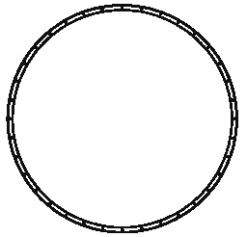

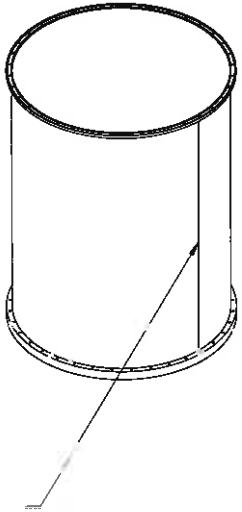

FOLLOW CAD MODEL GEOMETRY EXCEPT AS INDICATED

National Aeronautics and Space Administration

Goddard Space Flight Center
Kogut Group

proteus 4K working shield

Material:

Value Quantity

SCALE: 1:5

PN: PMW6
REV: A-09

20

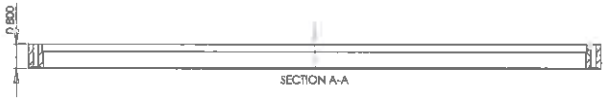

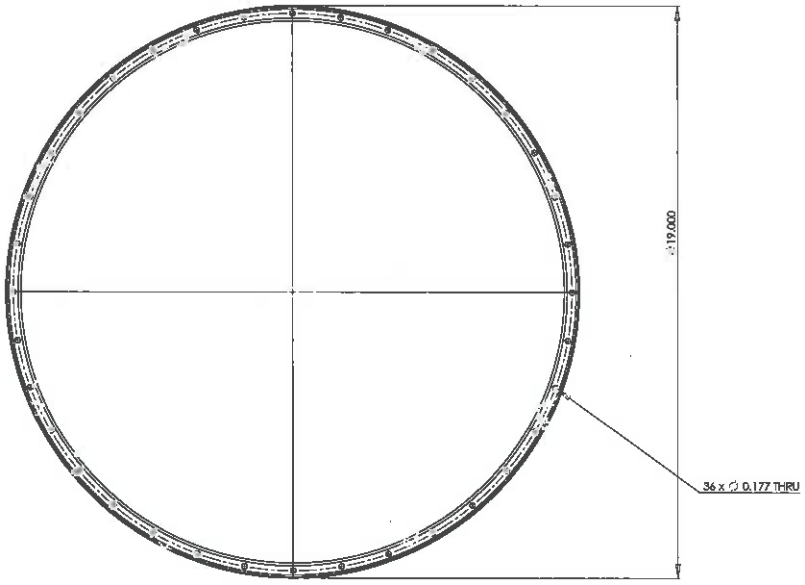

FOLLOW CAD MODEL GEOMETRY EXCEPT AS INDICATED

National Aeronautics and Space Administration

Goddard Space Flight Center
Kogul Group

proteus 4K working shield bottom flange

Material: 6061-T6 (SS)

Scale Quantity: 1

SCALE 1:2

PN: PM16
REV: A-05

21

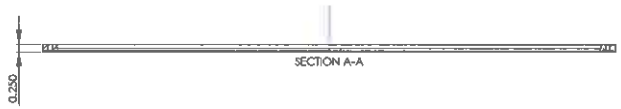

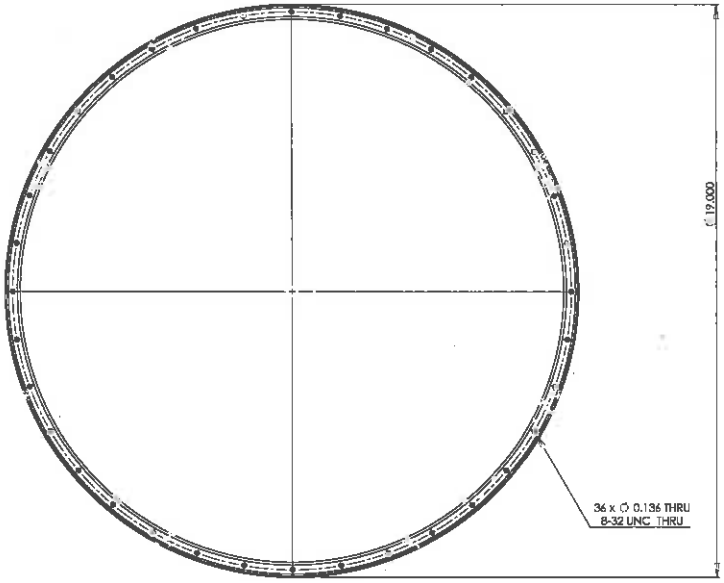

FOLLOW CAD MODEL GEOMETRY EXCEPT AS INDICATED

National Aeronautics and Space Administration

Goddard Space Flight Center
Kogul Group

proteus 4K working shield top flange

Material: 6061-T6 (SS)

Make Quantity: 1

SCALE: 1:2

PN: PM18
REV: A-03

22

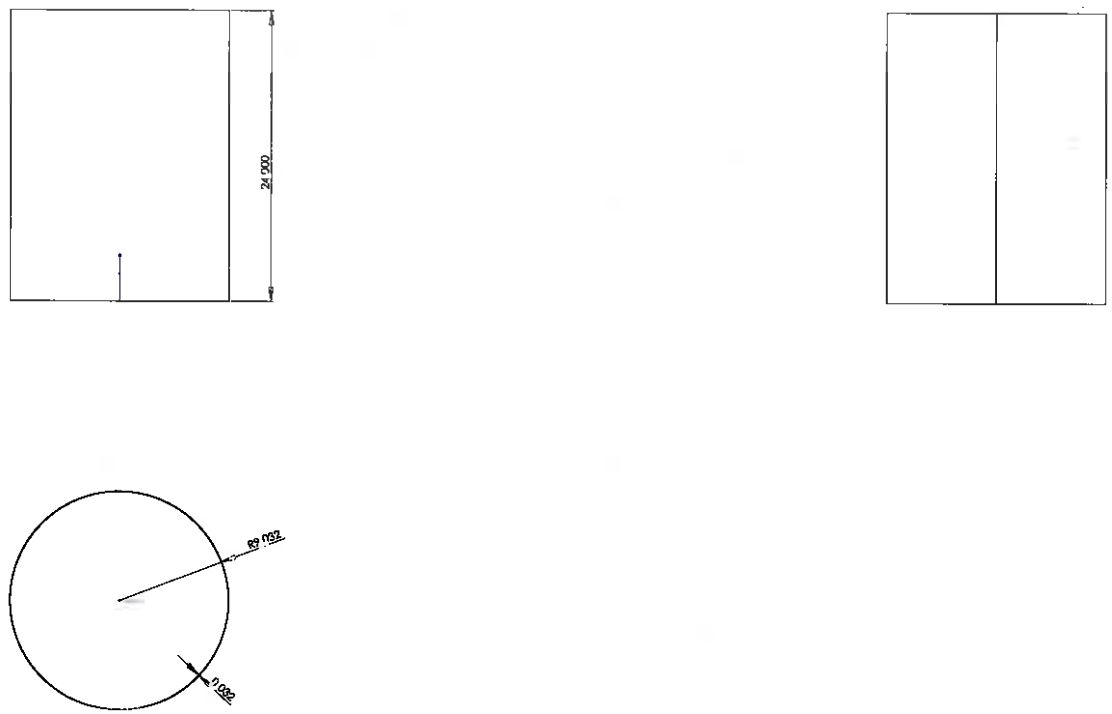

FOLLOW CAD MODEL GEOMETRY EXCEPT AS INDICATED

National Aeronautics and Space Administration

Goddard Space Flight Center
Kogut Group

proteus 4K working shield wall

Material: 6061-T6 (SS)

Make Quantity: 1

SCALE: 1:5

PN: PM17
REV: A-09

23

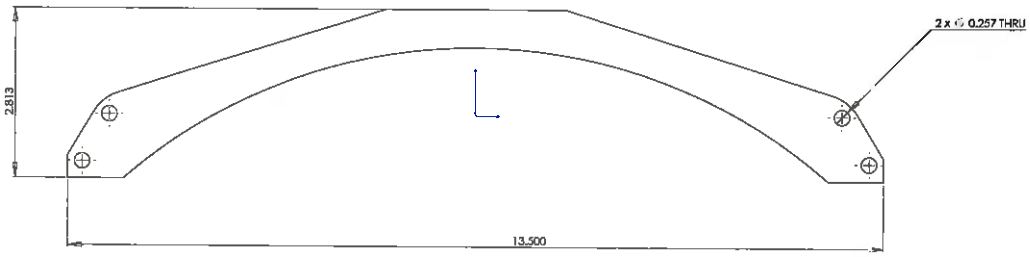

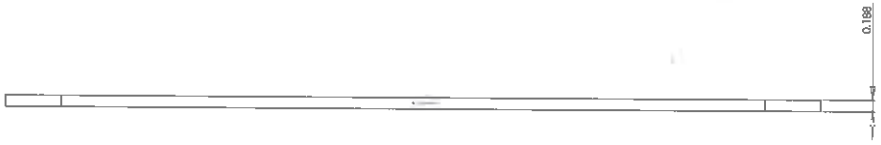

FOLLOW CAD MODEL GEOMETRY EXCEPT AS INDICATED

National Aeronautics and Space Administration

Goddard Space Flight Center
Kogial Group

proteus 25K facet bar

Material: Brass

Make Quantity: 3

SCALE: 1:1

PN: PM36
REV: A-04

24

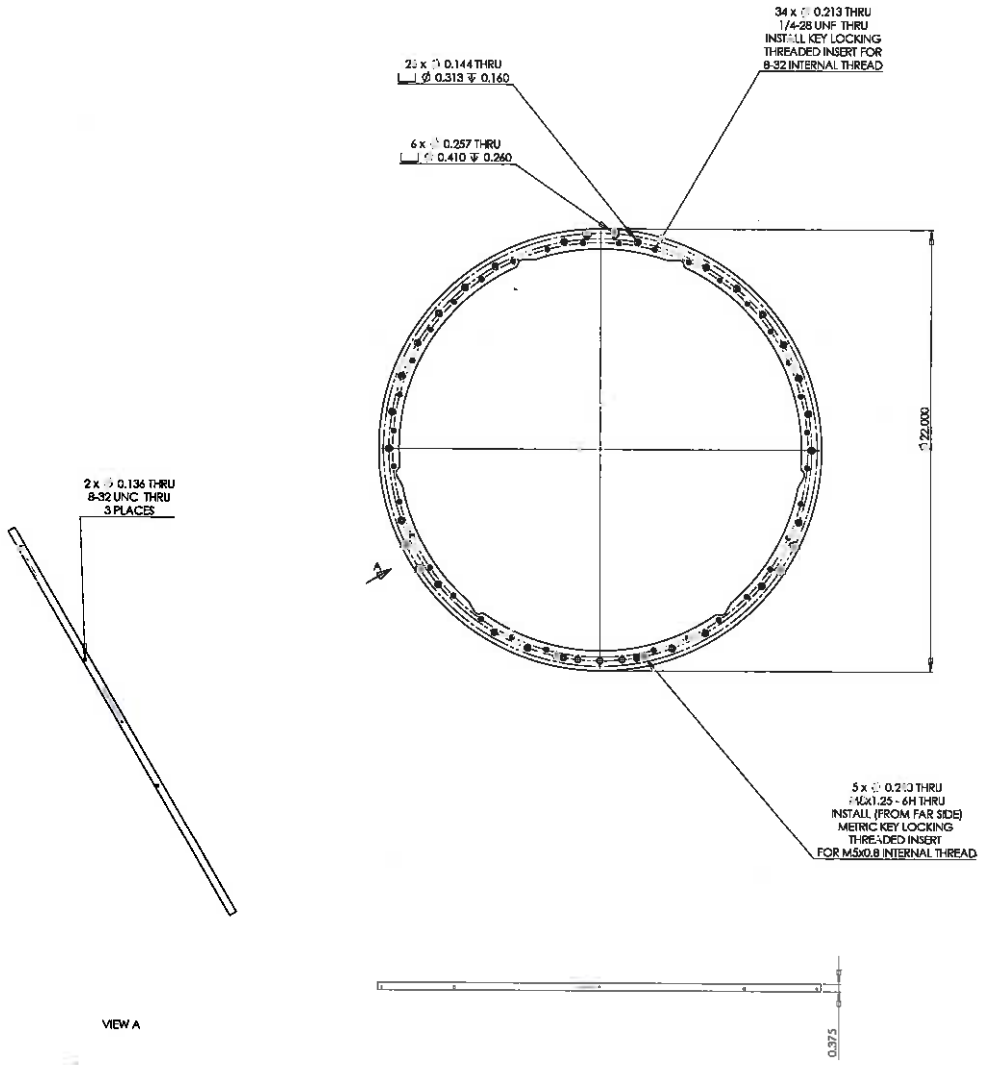

Plating:
No flash or Ti flash or Cu flash for adhesion. (no Ni)
Pure soft Au plating, 50 to 100 microinches thick.

FOLLOW CAD MODEL GEOMETRY EXCEPT AS INDICATED

National Aeronautics and Space Administration

Goddard Space Flight Center
Kogel Group

proteus 50K ring

Material: OFHC Copper 101

Make Quantity: 1

SCALE 1:1

PN: PM39
REV: A-11

25

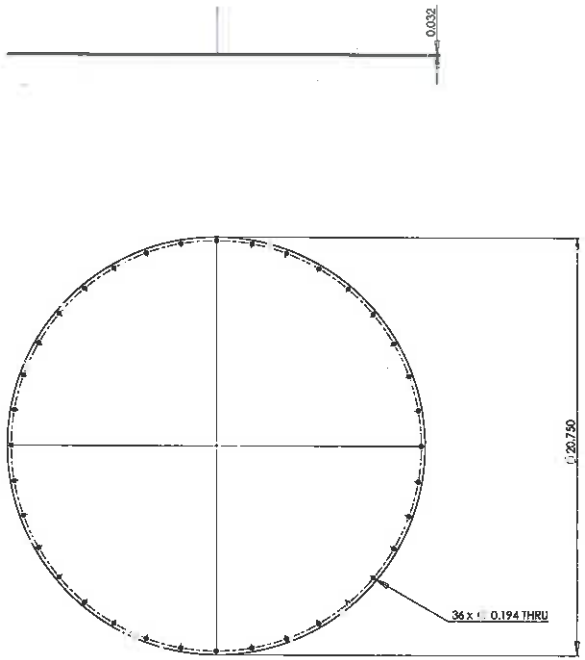

FOLLOW CAD MODEL GEOMETRY EXCEPT AS INDICATED

National Aeronautics and Space Administration

Goddard Space Flight Center
Knight Group

proteus 50K shield lid

Material: 6061-T6 (SS)

Make Quantity: 1

SCALE: 1:3

PN: PM15
REV: A-04

26

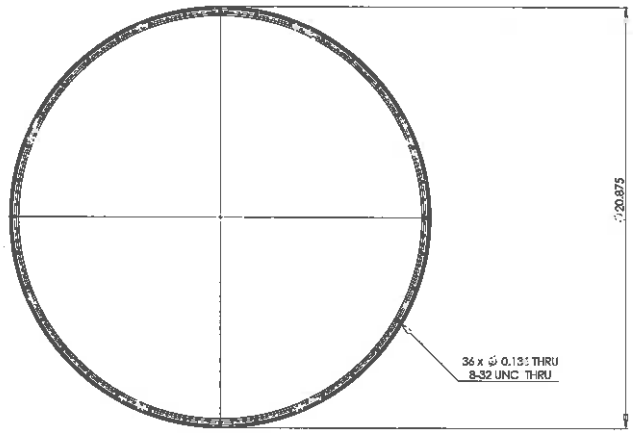

FOLLOW CAD MODEL GEOMETRY EXCEPT AS INDICATED

National Aeronautics and Space Administration

Goddard Space Flight Center
Kogut Group

proteus 50K shield terminal flange

Material: 6061-T6 (SS)

Order Quantity: 1

SCALE: 1:3

PN: PM14
REV: A-04

27

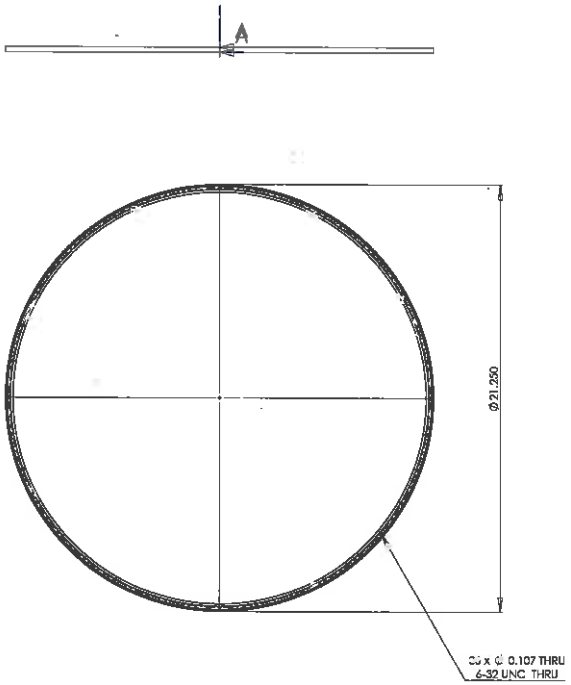

FOLLOW CAD MODEL GEOMETRY EXCEPT AS INDICATED

National Aeronautics and Space Administration

Goddard Space Flight Center
Kogut Group

proteus 50K utility shield end flange

Material: 6061-T6 (SS)

Make Quantity: 1

SCALE: 1:3

PN: PM22
REV: A-03

28

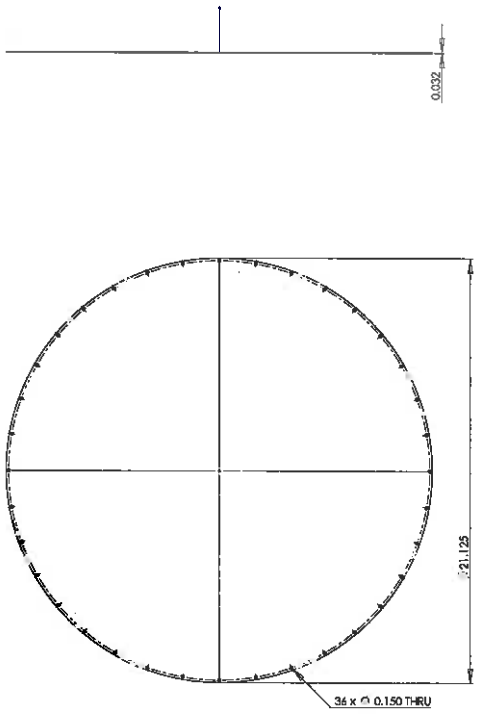

FOLLOW CAD MODEL GEOMETRY EXCEPT AS INDICATED

National Aeronautics and Space Administration

Goddard Space Flight Center
Kapton Group

proteus 50K utility shield lid

Material: 6061-T6 (SS)

Make Quantity: 1

SCALE: 1:3

PN: PM23
REV: A-05

29

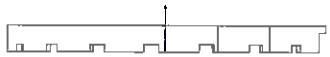

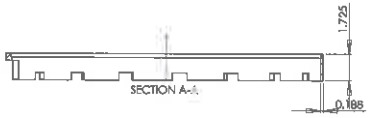

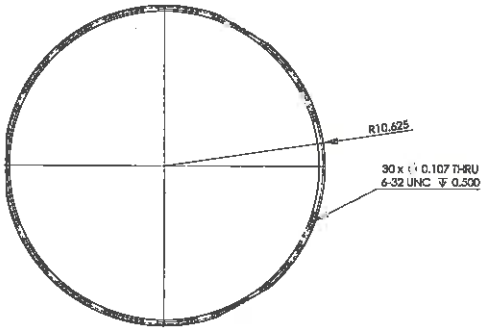

FOLLOW CAD MODEL GEOMETRY EXCEPT AS INDICATED

National Aeronautics and Space Administration

Goddard Space Flight Center
Kogul Group

proteus 50K utility shield top flange

Material: 6061-T6 (SI)

Make Quantity: 1

SCALE: 1:1

PN: PM20
REV: A-08

30

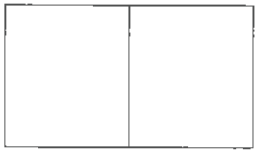

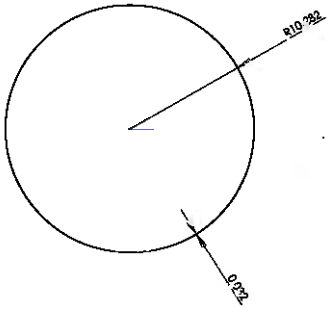

FOLLOW CAD MODEL GEOMETRY EXCEPT AS INDICATED

UNLESS OTHERWISE SPECIFIED, DIMENSIONS ARE IN INCHES
TOLERANCE:
CODING:

National Aeronautics and Space Administration

Goddard Space Flight Center
Kogut Group

proteus 50K utility shield wall

Material: 6061-T6 (SS)

Make Quantity: 1

SCALE: 1:5

PN: PM21
REV: A-06

31

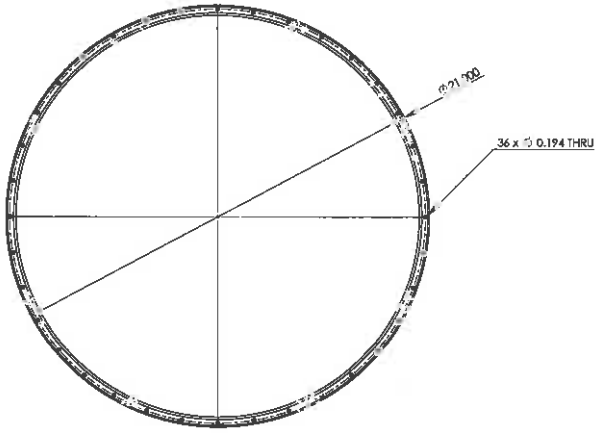

FOLLOW CAD MODEL GEOMETRY EXCEPT AS INDICATED

National Aeronautics and Space Administration

Goddard Space Flight Center
Kogut Group

proteus 50K working shield bottom flange

Material: 6061-T6 (SS)

Make Quantity: 1

SCALE: 1:3

PN: PM12
REV: A-05

32

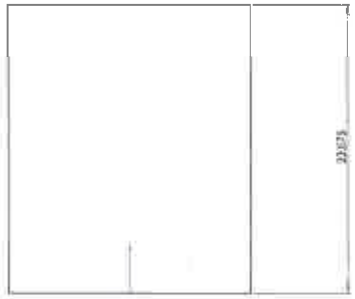

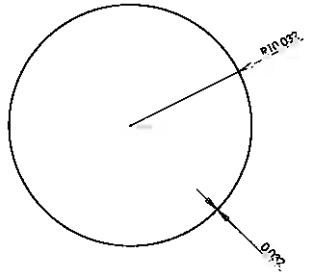

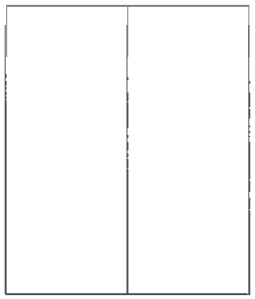

FOLLOW CAD MODEL GEOMETRY EXCEPT AS INDICATED

National Aeronautics and Space Administration

Goddard Space Flight Center
Kogut Group

proteus 50K working shield wall

Material: 6061-T6 (SS)

Item Quantity: 1

PN: PM13
REV: A-06

SCALE: 1:5

33

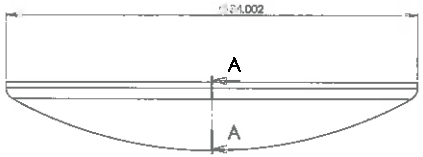

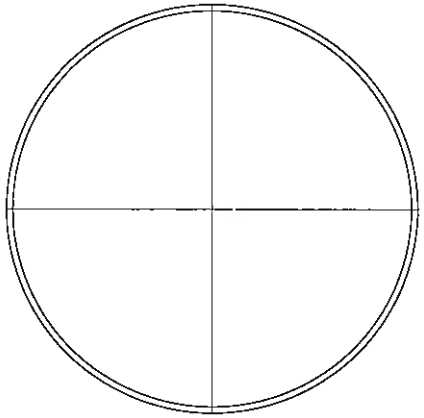

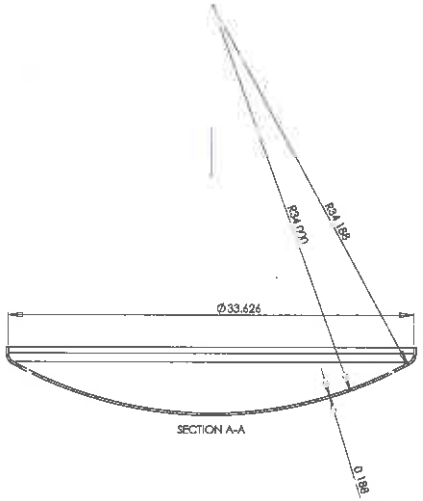

Rev D, Now with Thicker Dome!
And More Standardized Spin Radius!

FOLLOW CAD MODEL GEOMETRY EXCEPT AS INDICATED

CONTACT:

National Aeronautics and Space Administration

Goddard Space Flight Center
Kogul Group

proteus bottom vac dome

Material: 6061-T6 (SS)

Make Quantity: 1

SCALE: 1:5

PN: PM07
REV: D-02

34

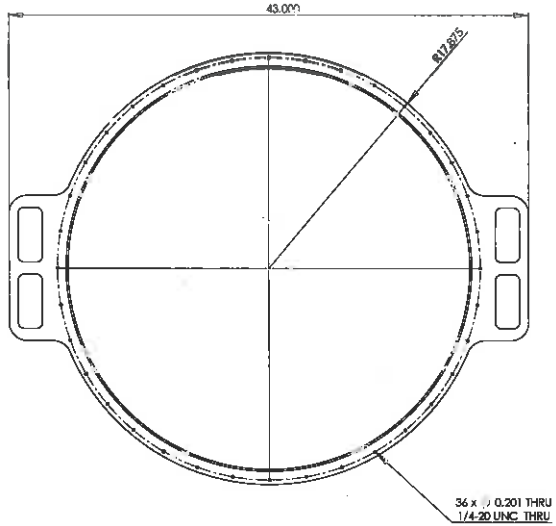

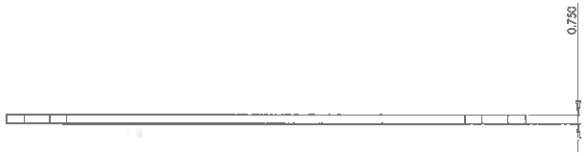

FOLLOW CAD MODEL GEOMETRY EXCEPT AS INDICATED

National Aeronautics and Space Administration

Goddard Space Flight Center
Kogut Group

proteus bottom vac flange

Material: 6061-T6 (SS)

Item Quantity: 1

SCALE: 1:5

PN: PM05
REV: A-04

35

ITEM NO.	PART NUMBER	QTY.
1	proteus bottom vac flange	1
2	proteus bottom vac wall	1
3	proteus bottom vac dome	1

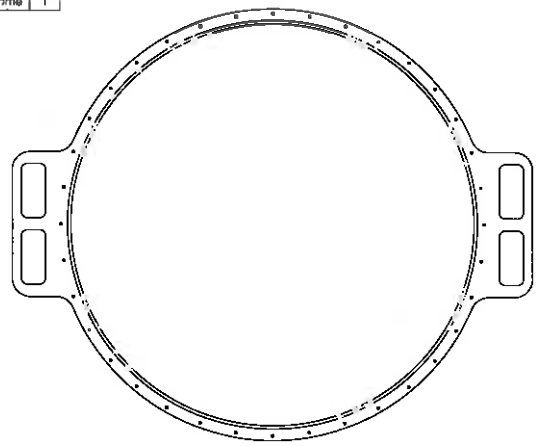

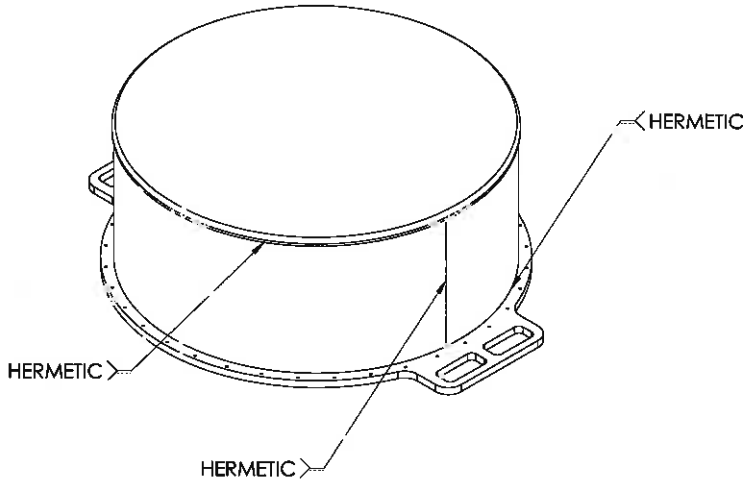

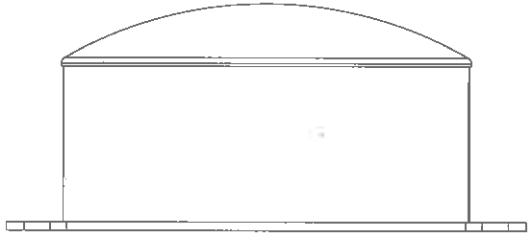

FOLLOW CAD MODEL GEOMETRY EXCEPT AS INDICATED

National Aeronautics and Space Administration

Goddard Space Flight Center Kogul Group

proteus bottom vac shell

Material:

Make Quantity: 1

SCALE: 1:5

PN: PMW3
REV: A-05

36

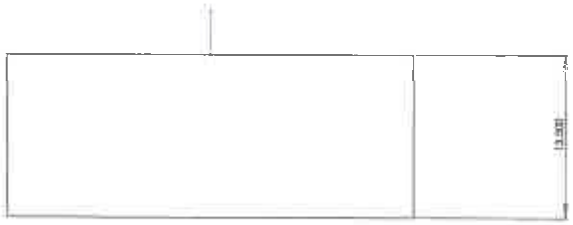

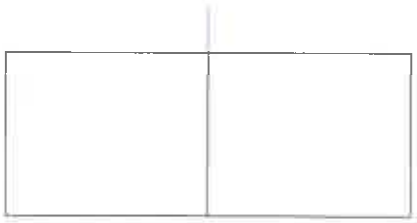

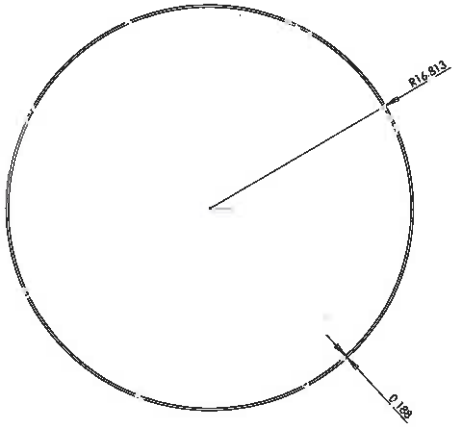

Rev D, Non-with Thicker Wall

FOLLOW CAD MODEL GEOMETRY EXCEPT AS INDICATED

National Aeronautics and Space Administration

Goddard Space Flight Center Kapton Group

proteus bottom vac wall

Material: 6061-T6 (SS)

Scale Quantity: 1

SCALE: 1:5

PN: PM06
REV: D-01

37

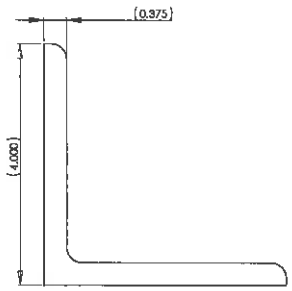

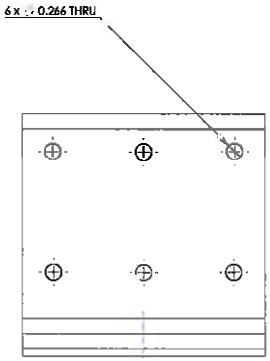

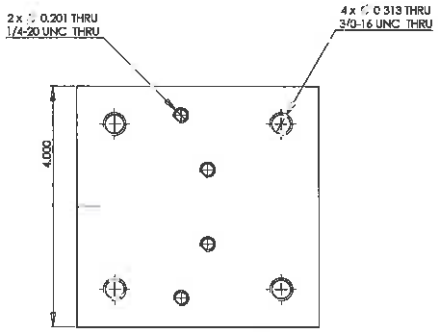

FOLLOW CAD MODEL GEOMETRY EXCEPT AS INDICATED

National Aeronautics and Space Administration

Goddard Space Flight Center
Kogul Group

proteus front floor bracket

Material: 6061-T6 (SS)

Make Quantity: 1

SCALE: 1:1

PN: PM44
REV: A-06

38

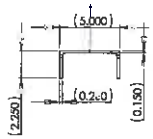

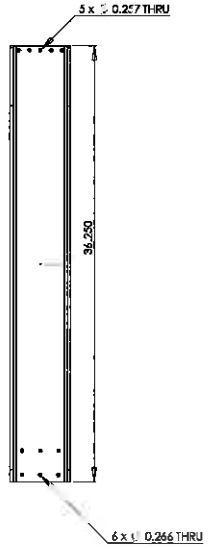

FOLLOW CAD MODEL GEOMETRY EXCEPT AS INDICATED

National Aeronautics and Space Administration

Goddard Space Flight Center
Kaput Group

proteus front leg

Material: 6061-T6 (SS)

Make Quantity: 1

SCALE: 1:5

PN: PM43
REV: A-07

39

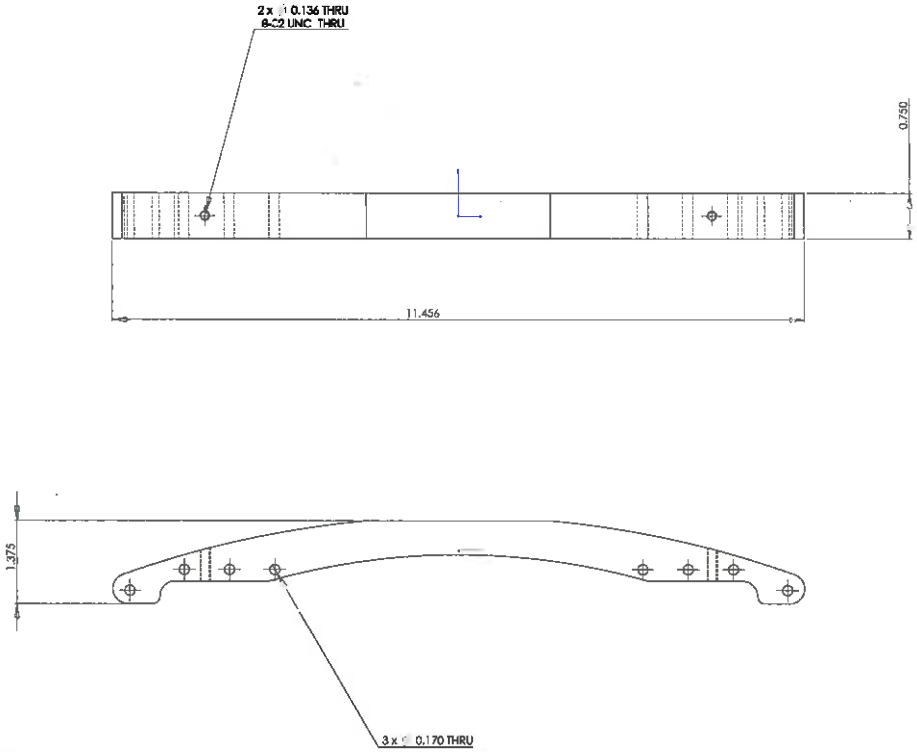

FOLLOW CAD MODEL GEOMETRY EXCEPT AS INDICATED

National Aeronautics and Space Administration

Goddard Space Flight Center
Kogul Group

proteus front suspension mount block

Material: 6061-T6 (SS)

Make Quantity: 1

SCALE 1:1

PN: PM29
REV: A-05

40

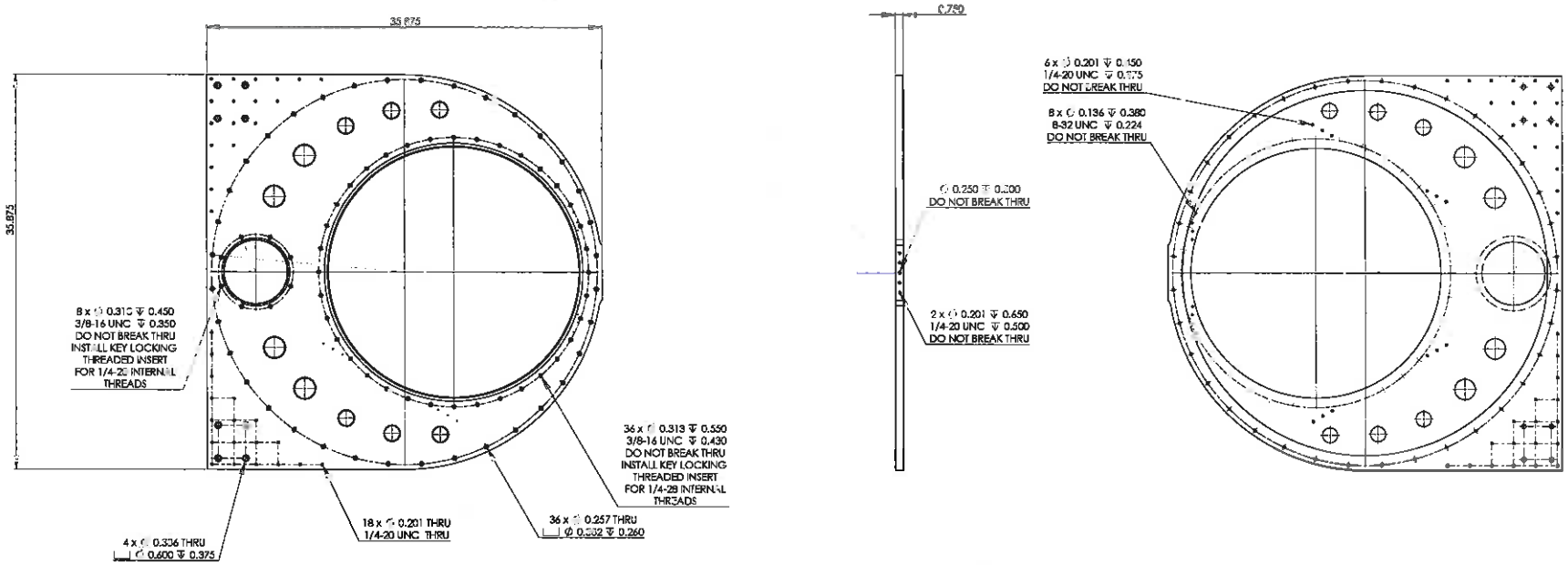

FOLLOW CAD MODEL GEOMETRY EXCEPT AS INDICATED

National Aeronautics and Space Administration

Goddard Space Flight Center
Kogul Group

Proteus Main Plate

Material: 6061-T6 (SS)

Order Quantity: 1

SCALE: 1:1

PN: PM01
REV: C-16

41

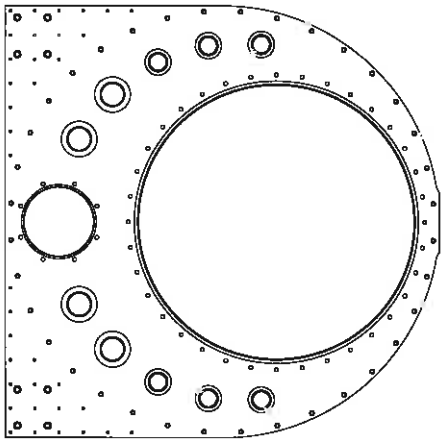

ITEM NO.	PART NUMBER	main plate weld/QTY.
1	KF-NW40 weld stub	6
2	KF-NW50 weld stub	4
3	Proteus Main Plate	1

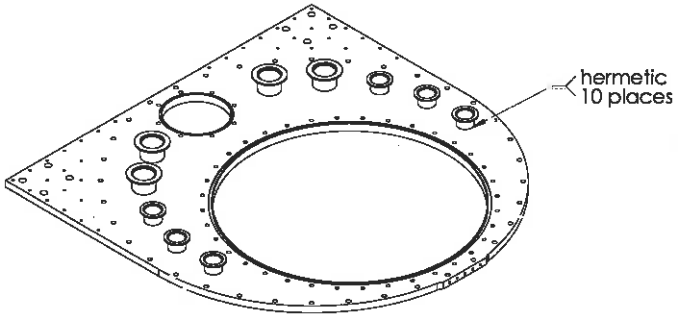

National Aeronautics and Space Administration

Goddard Space Flight Center Kogull Group

Proteus Main Plate Weldment

Material: 6061-T6 (US)

Finite Quantity: 1

SCALE: 1:3

PN:PMW1

REV: A-01

42

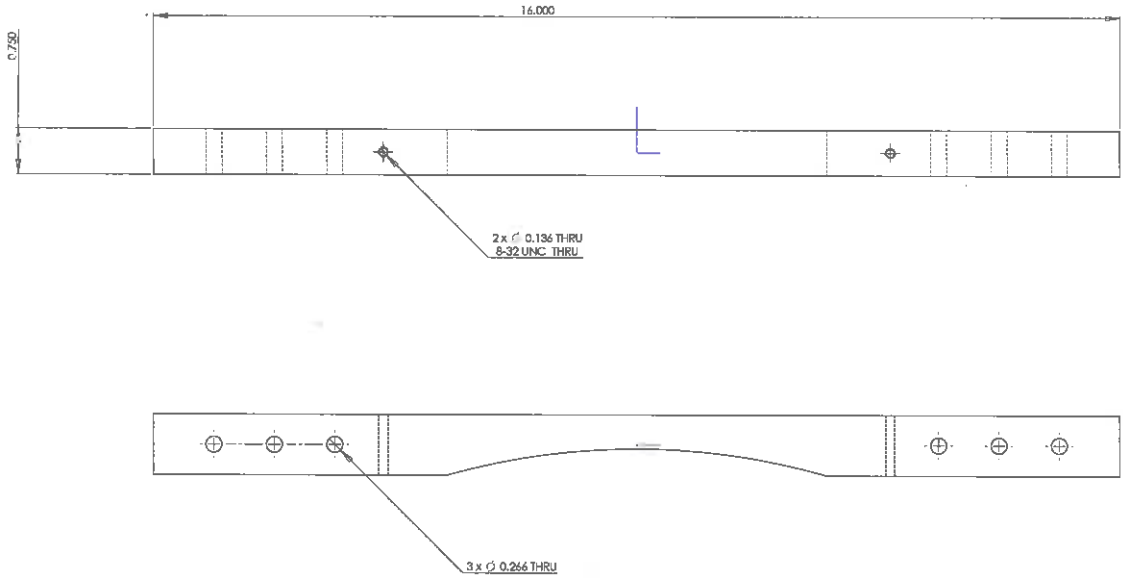

FOLLOW CAD MODEL GEOMETRY EXCEPT AS INDICATED

National Aeronautics and Space Administration

Goddard Space Flight Center
Kopal Group

proteus main suspension mount block

Material: 6061-T6 (SS)

Make Quantity: 2

SCALE: 1:1

PN: PM28
REV: A-06

43

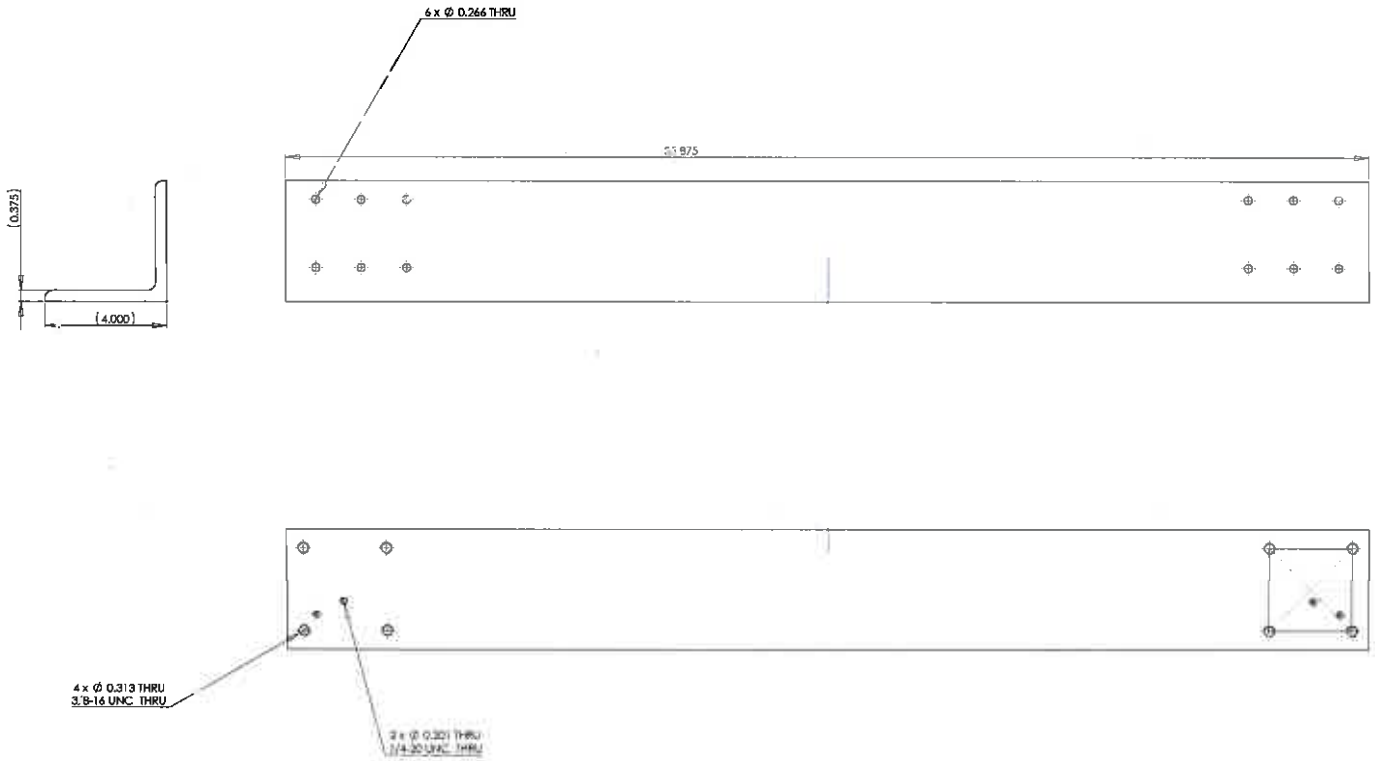

FOLLOW CAD MODEL GEOMETRY EXCEPT AS INDICATED

National Aeronautics and Space Administration

Goddard Space Flight Center
Kogut Group

proteus rear floor bracket

Material: 6061-T6 (US)

Make Quantity: 1

SCALE: 1:1

PN: PM45
REV: A-08

44

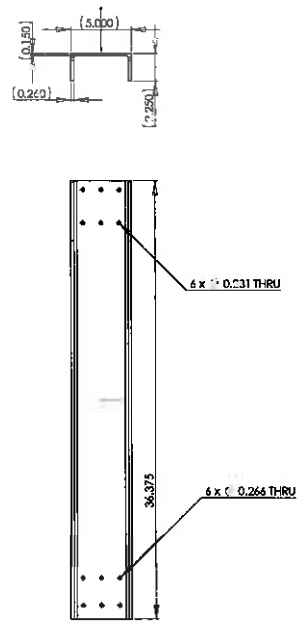

FOLLOW CAD MODEL GEOMETRY EXCEPT AS INDICATED

National Aeronautics and Space Administration

proteus rear leg

Material: 6061-T6 (SS)

Make Quantity: 2

SCALE: 1:5

Goddard Space Flight Center
Kogut Group

PN: PM42
REV: A-05

45

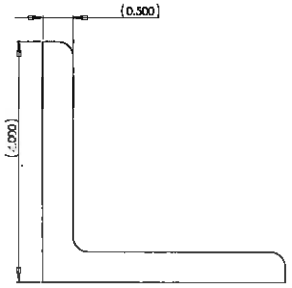

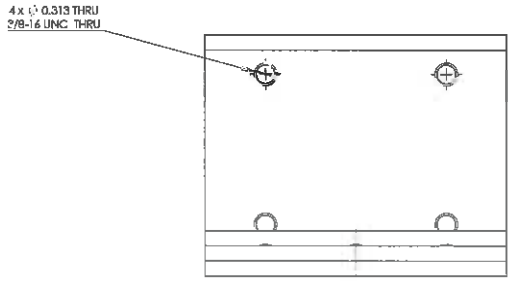

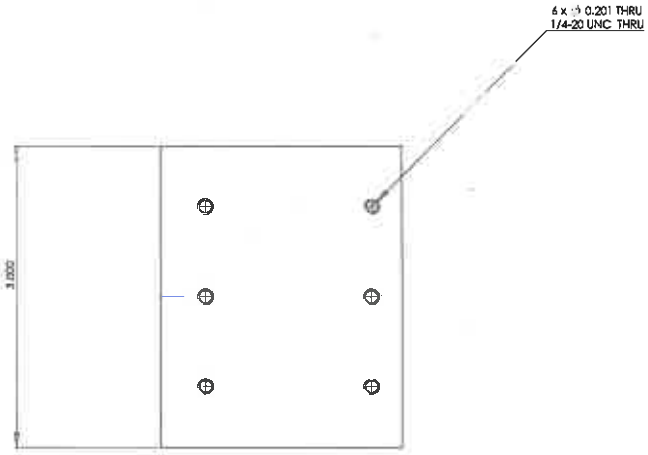

FOLLOW CAD MODEL GEOMETRY EXCEPT AS INDICATED

National Aeronautics and Space Administration

Goddard Space Flight Center Target Group

proteus rear leg bracket

Material: 6061-T6 (SS)

Make Quantity: 2

SCALE: 1:1

PN: PM41
REV: A-04

46

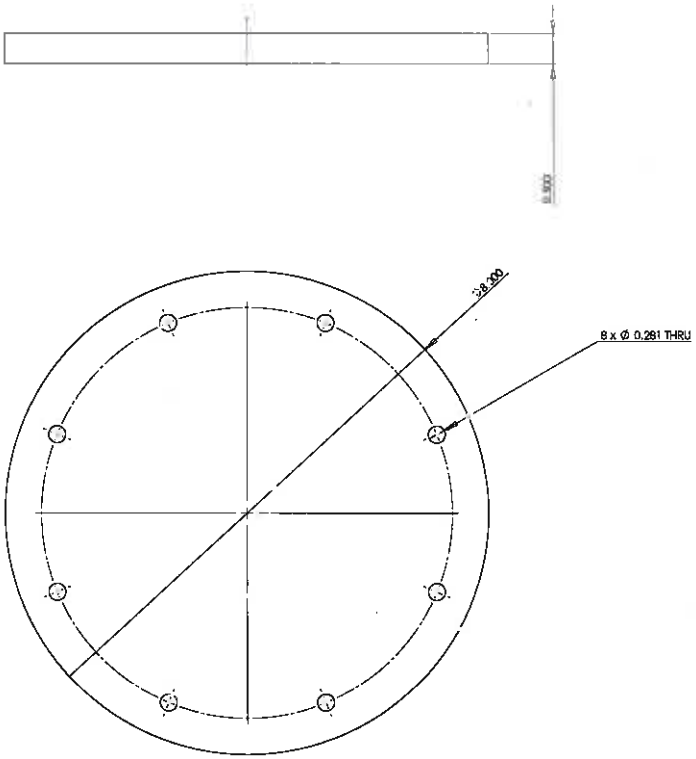

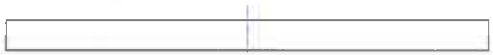

FOLLOW CAD MODEL GEOMETRY EXCEPT AS INDICATED

National Aeronautics and Space Administration

Goddard Space Flight Center
Kugat Group

Proteus test cover

Material: 6061-T6 (SS)

Make Quantity: 1

SCALE: 1:1

PN: PM11
REV: A-04

47

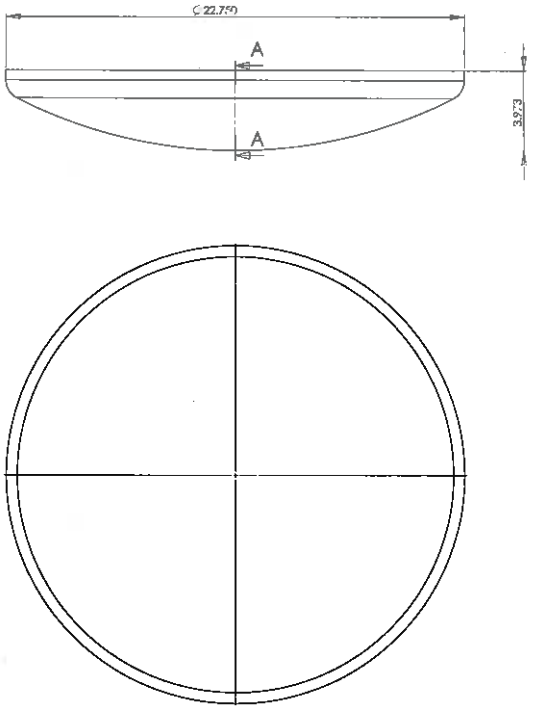

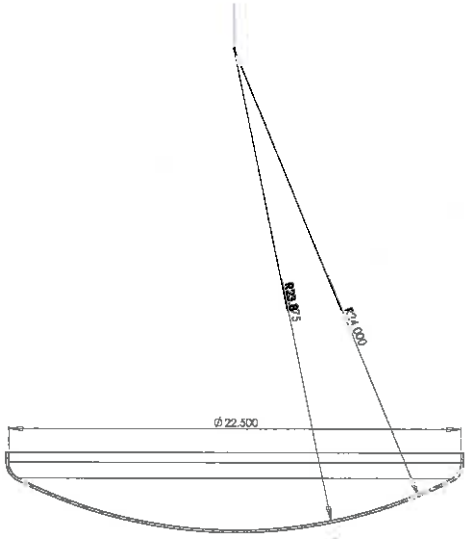

SECTION A-A

Rev D, Now with Thicker Dome!
And Have Standardized Spin Radius!

FOLLOW CAD MODEL GEOMETRY EXCEPT AS INDICATED

National Aeronautics and Space Administration

Goddard Space Flight Center
Kogut Group

proteus top vac dome

Material: 6061-T6 (SS)

Make Quantity

SCALE: 1:3

PN: PM03
REV: D-01

48

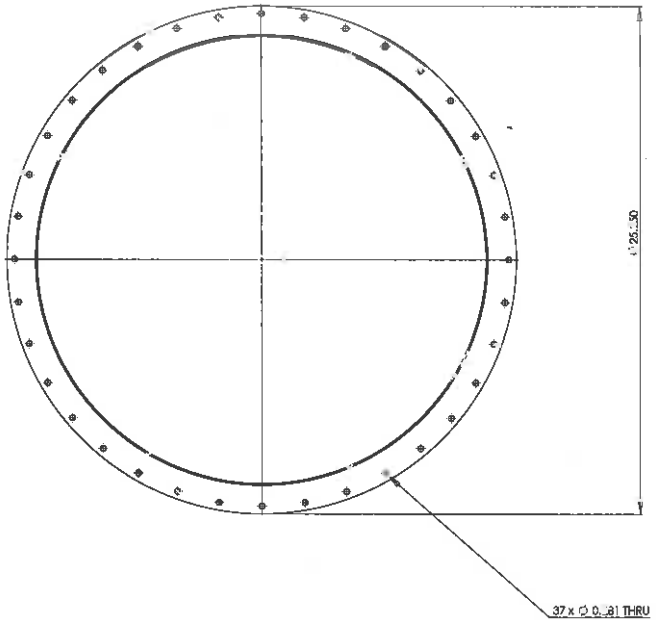

FOLLOW CAD MODEL GEOMETRY EXCEPT AS INDICATED

National Aeronautics and Space Administration

Goddard Space Flight Center
Kogut Group

proteus top vac flange

Material: 6061-T6 (SS)

Make Quantity: 1

SCALE: 1:3

PN: PM02
REV: A-03

49

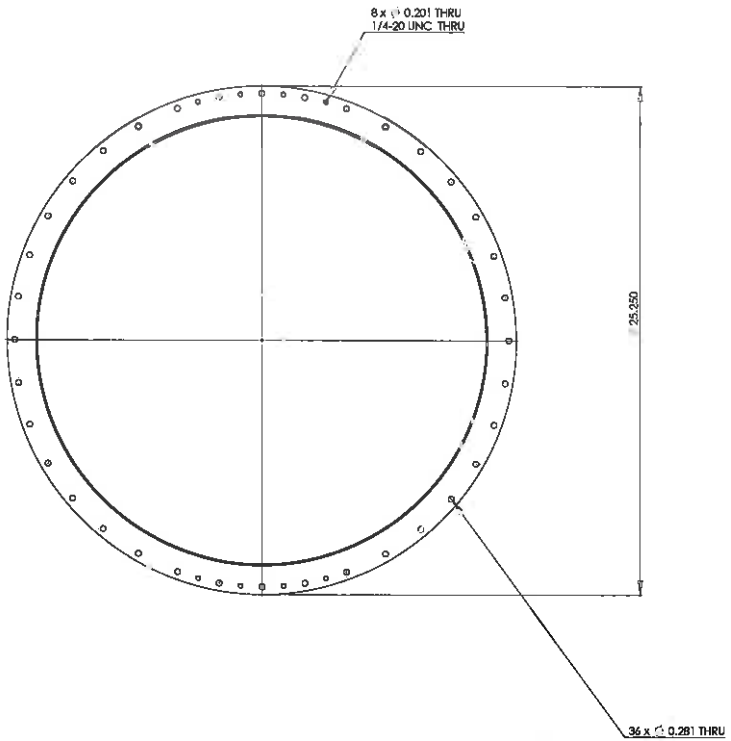

FOLLOW CAD MODEL GEOMETRY EXCEPT AS INDICATED

National Aeronautics and Space Administration

Goddard Space Flight Center
Kogul Group

proteus top vac flange

Material: 6061-T6 (SS)

Plate Quantity: 1

SCALE 1:3

PN: PM02
REV: A-06

50

ITEM NO.	PART NUMBER	QTY.
1	proteus top vac flange	1
2	proteus top vac dome	1
3	proteus top vac wall	1

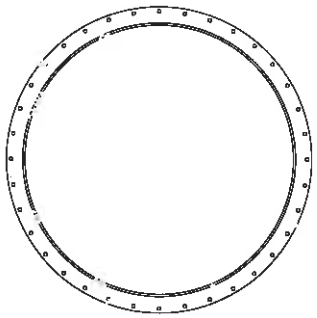

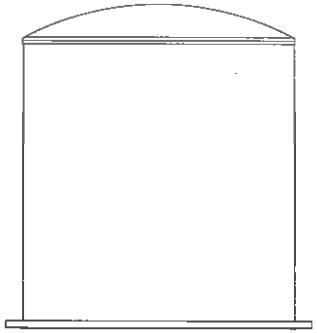

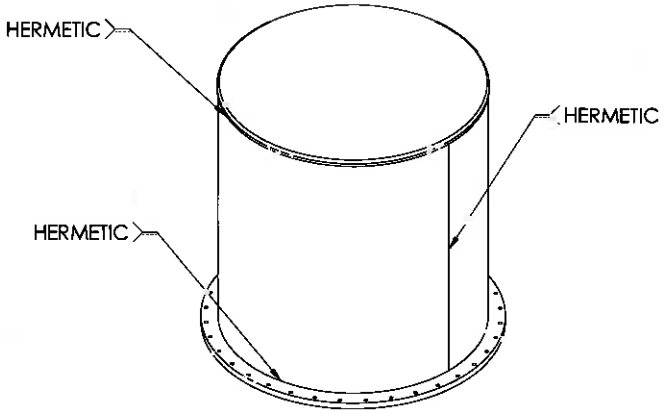

FOLLOW CAD MODEL GEOMETRY EXCEPT AS INDICATED

National Aeronautics and Space Administration

Goddard Space Flight Center
Kugut Group

proteus top vac shell

Material:

Note Quantity: 1

SCALE: 1:5

PN: PMW2
REV: A-03

51

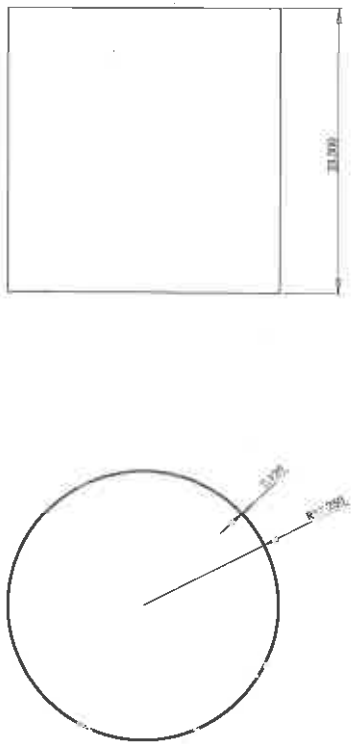

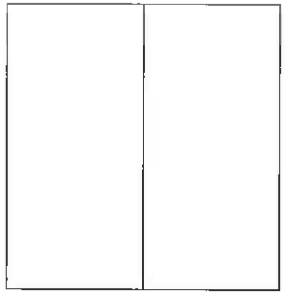

Rev. D, Nov with Thicker Wall

FOLLOW CAD MODEL GEOMETRY EXCEPT AS INDICATED

National Aeronautics and Space Administration

Goddard Space Flight Center Ropul Group

proteus top vac wall

Material: 6061-T6 (SS)

Mass: Quantity: 1

SCALE: 1:1

PN: PM04
REV: D-01

52

ITEM NO.	PART NUMBER	NOUD/QTY.
1	proteus 50K utility shield top flange	1
2	proteus 50K utility shield end flange	1
3	proteus 50K utility shield wall	1

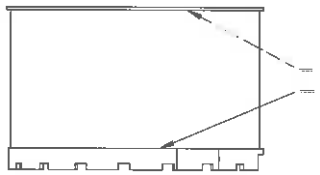

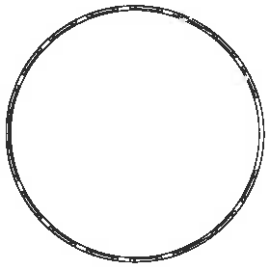

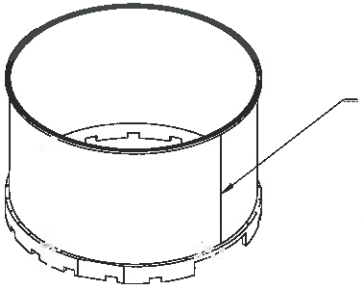

FOLLOW CAD MODEL GEOMETRY EXCEPT AS INDICATED

National Aeronautics and Space Administration

Goddard Space Flight Center Kegut Group

proteus utility shield 50K

Material:

Make Quantity: 1

SCALE: 1:5

PN: PMW7
REV: A-10

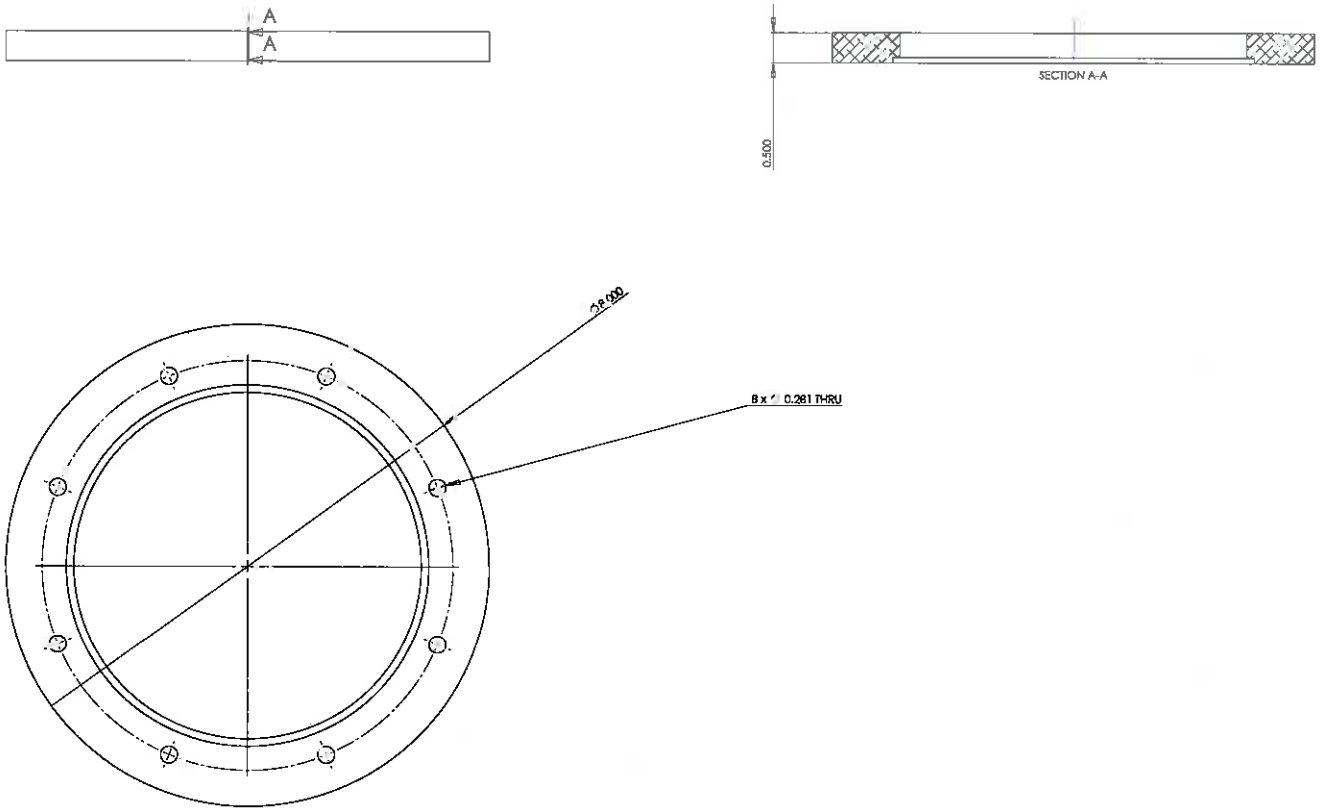

FOLLOW CAD MODEL GEOMETRY EXCEPT AS INDICATED

National Aeronautics and Space Administration

Goddard Space Flight Center
Kogut Group

Proteus Vac Flange

Material: 6061-T6 (SS)

Order Quantity: 1

SCALE: 1:1

PN: PM08
REV: A-03

ITEM NO.	PART NUMBER	QTY.
1	O-ring Vac Flange	1
2	Proteus Vac Section 1	1
3	Proteus Vac Flange	1

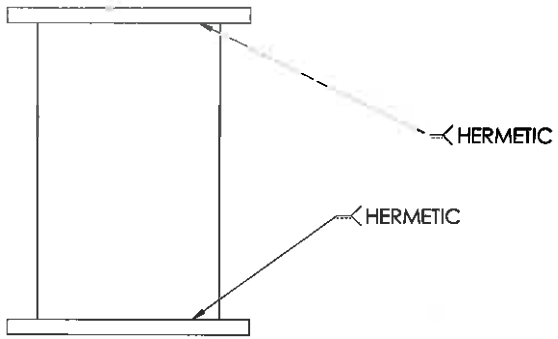

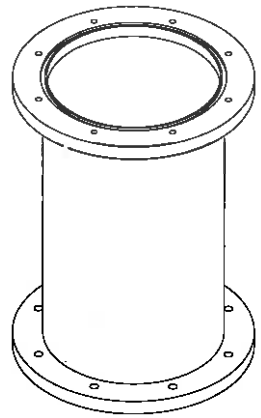

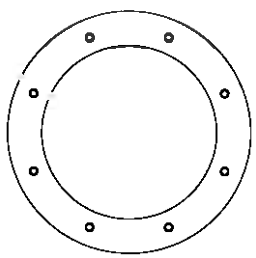

FOLLOW CAD MODEL GEOMETRY EXCEPT AS INDICATED

National Aeronautics and Space Administration

Goddard Space Flight Center Kogut Group

Proteus Vac Nipple 1

Material:

Make Quantity: 1

SCALE: 1 :

PN: PMW4
REV: A-08

55

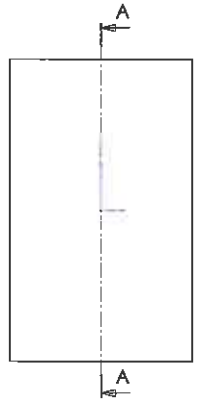

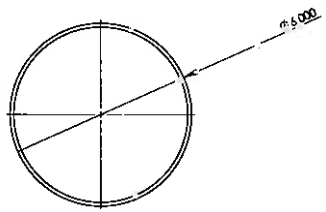

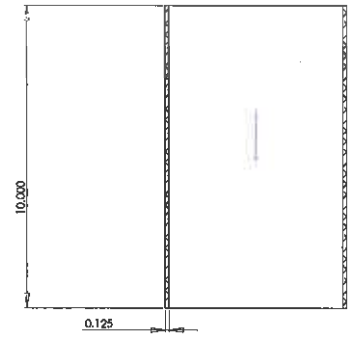

SECTION A-A

USE STOCK TUBING

FOLLOW CAD MODEL GEOMETRY EXCEPT AS INDICATED

National Aeronautics and Space Administration

Goddard Space Flight Center
Kogul Group

Proteus Vac Section 1

Material: 6061-T6 (SS)

Make Quantity: 1

SCALE: 1:2

PN: PM09
REV: A-07

56

ITEM NO.	PART NUMBER	QTY.
1	proteus 50K working shield bottom flange	1
2	proteus 50K shield terminal flange	1
3	proteus 50K working shield wall	1

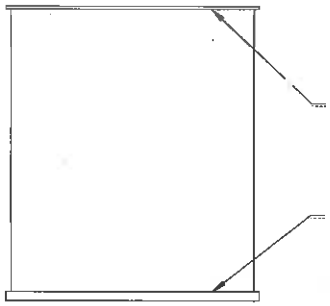

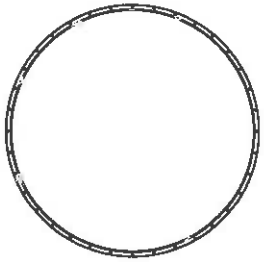

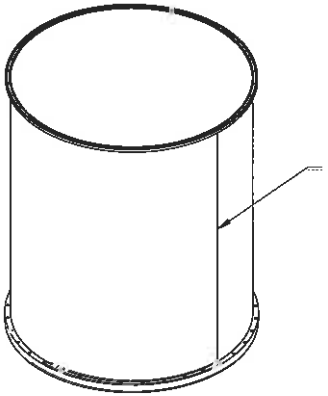

FOLLOW CAD MODEL GEOMETRY EXCEPT AS INDICATED

National Aeronautics and Space Administration

Goddard Space Flight Center
Kogul Group

proteus working shield 50K

Material:

Make Quantity: 1

SCALE: 1:5

PN: PMW5
REV: A-05

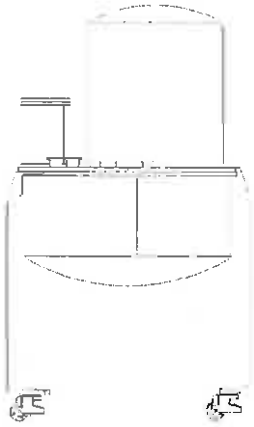

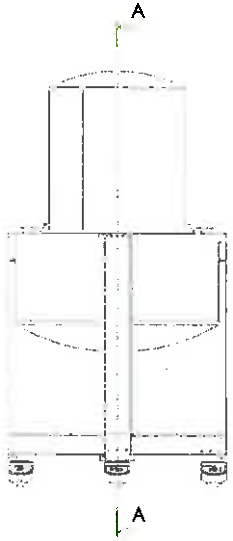

SECTION A-A

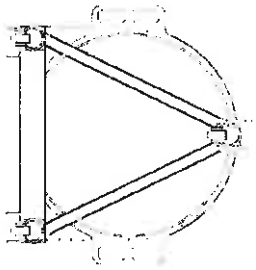

FOLLOW CAD MODEL GEOMETRY EXCEPT AS INDICATED

National Aeronautics and Space Administration

Goddard Space Flight Center Kogut Group

Proteus Maximus Assembly

Material:

Make Quantity: 1

SCALE: 1:10

PN: PMA1
REV: D-04

58

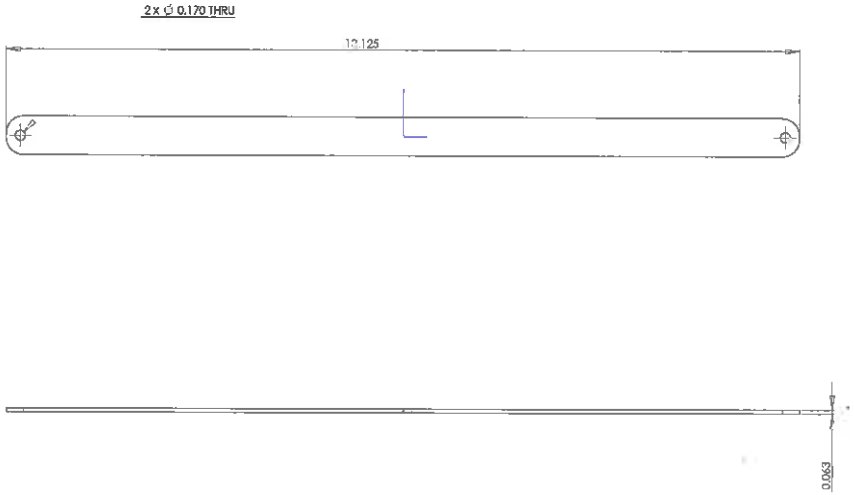

FOLLOW CAD MODEL GEOMETRY EXCEPT AS INDICATED

National Aeronautics and Space Administration

Goddard Space Flight Center
Kogut Group

vent strap for proteus

Material: G10/FR4

Make Quantity: 6

SCALE: 1:1

PN: PM34
REV: A-05

59