WALLOPS AIRFIELD REPAIR PROJECT, PHASE 1 (A-2C, A-3B, A-4B & TA-3A)

NATIONAL AERONAUTICS AND SPACE ADMINISTRATION
GODDARD SPACE FLIGHT CENTER
WALLOPS FLIGHT FACILITY
WALLOPS ISLAND, VIRGINIA

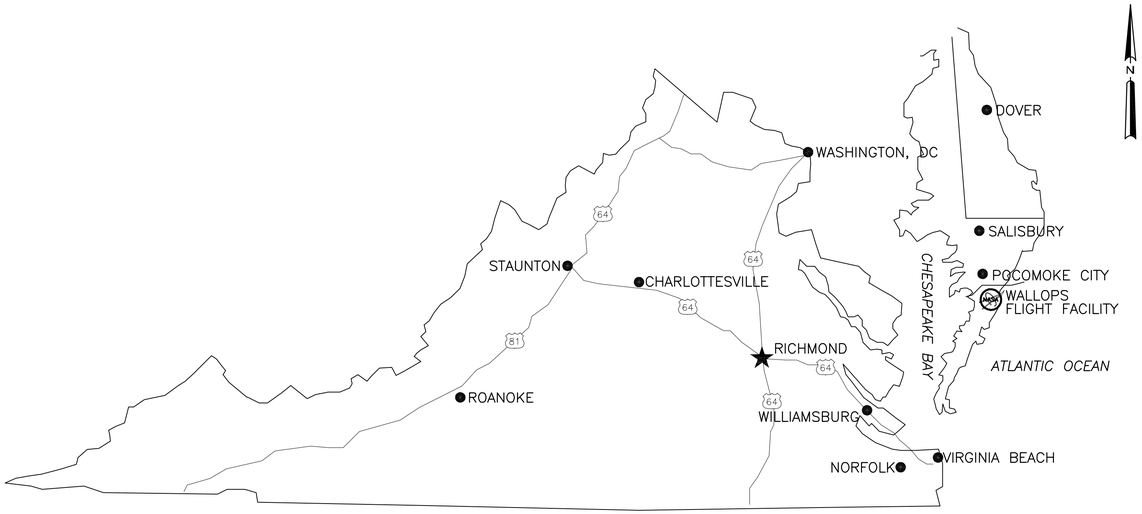

A VICINITY MAP
NTS

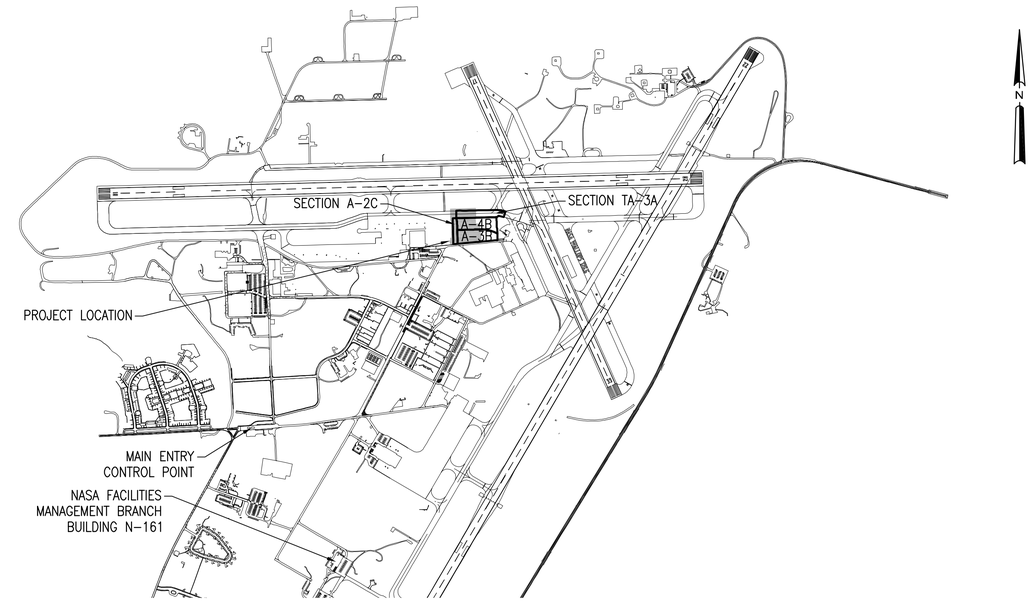

B LOCATION MAP
1" = 1000'

INDEX OF DRAWINGS

SHEET NO.	DWG. NO.	PAGE NO.	SHEET TITLE
GENERAL			
G–001	16929	1	COVER SHEET
G–002	16930	2	GENERAL NOTES AND HAUL ROUTE
SURVEY			
V–100	16931	3	SURVEY CONTROL PLAN
CIVIL			
C–001	16932	4	NOTES, LEGEND, AND ABBREVIATIONS
CD101	16933	5	DEMOLITION PLAN
CD102	16934	6	DEMOLITION PLAN
CD103	16935	7	DEMOLITION PLAN
CD104	16936	8	DEMOLITION PLAN
CD501	16937	9	DEMOLITION DETAILS
CG101	16938	10	GRADING PLAN
CIVIL (CONTINUED)			
CG102	16939	11	GRADING PLAN
CG103	16940	12	GRADING PLAN
CG104	16941	13	GRADING PLAN
CS101	16942	14	JOINT LAYOUT PLAN
CS102	16943	15	JOINT LAYOUT PLAN
CS103	16944	16	JOINT LAYOUT PLAN
CS104	16945	17	JOINT LAYOUT PLAN
CS501	16946	18	NEW WORK DETAILS
CS502	16947	19	NEW WORK DETAILS
CM101	16948	20	MARKING PLAN
CM102	16949	21	MARKING PLAN
CM103	16950	22	MARKING PLAN
CM104	16951	23	MARKING PLAN
CM501	16952	24	MARKING DETAILS

G–001

NATIONAL AERONAUTICS AND SPACE ADMINISTRATION
GODDARD SPACE FLIGHT CENTER
WALLOPS FLIGHT FACILITY
WALLOPS ISLAND, VIRGINIA 23337

DATE	LET.	REVISIONS	CK.	AP.

PROJECT ENGINEER — DATE :
SUBMITTED BY — DATE : 5-5-2014
PROJECT MANAGER

NASA SAFETY — DATE 5-5-2014
FIRE PROTECTION — DATE : 5-15-2014

CONSTRUCTION MANAGEMENT — DATE : 5-5-2014
O & M — DATE : 5-5-2014

ENGINEERING APPROVAL — DATE 5-5-2014
ENGINEERING GROUP LEADER
BRANCH APPROVAL — DATE 5-5-2014
BRANCH HEAD

GRAPHIC SCALE 0' 1000' 2000'
1"=1000'
AUTOCAD – RELEASE 2010
FILE NAME: '1-1337236-G-0
SCALE 1" = 1000'
SHEET 1 OF 24

WALLOPS AIRFIELD REPAIR PROJECT
PHASE I
COVER SHEET

PROJECT NUMBER: 1337236
DR. STH — DATE:
CK. LMH — REVISED:

DRAWING NO. 16929

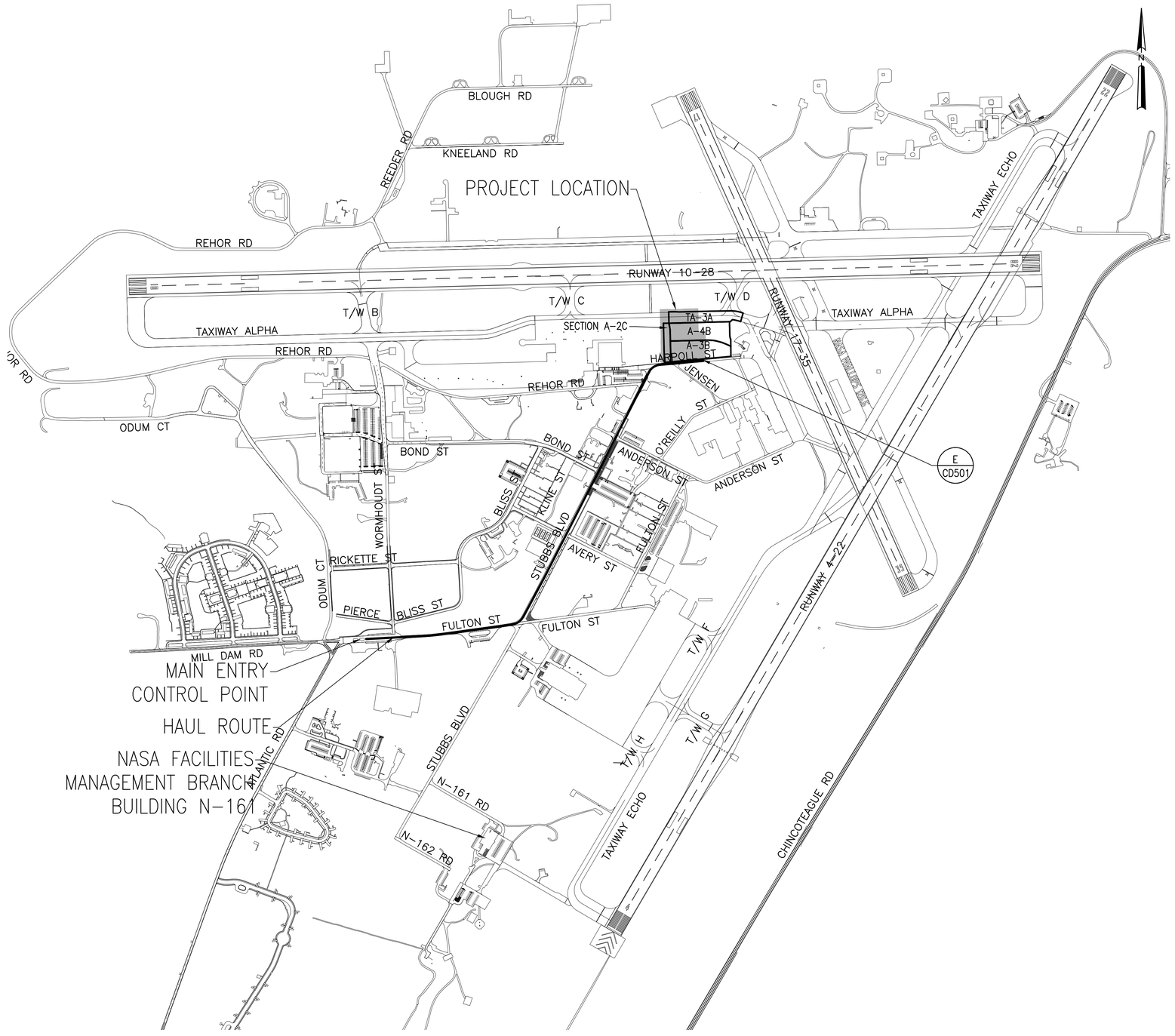

A HAUL ROUTE
1" = 500'

GENERAL NOTES

1. ALL DIMENSIONS ARE IN FEET (FT) AND INCHES (INCH).
2. ITEMS OF NEW WORK INDICATED ON REPAIR SCHEDULE WERE OBTAINED BY FIELD SURVEY. CONTRACTOR MUST FIELD VERIFY EXACT LOCATION OF REPAIR ITEMS AND OBTAIN CONCURRENCE OF LOCATION WITH THE CONTRACTING OFFICER PRIOR TO BEGINNING WORK.
3. CONTRACTOR MUST FIELD VERIFY EXACT LOCATION OF UNDERGROUND UTILITY PRIOR TO BEGINNING CONSTRUCTION. ASSUME ALL PAVEMENTS ARE BOUND BY UNDERGROUND ELECTRIC AT MINIMUM OF 1.5 FEET BELOW EXISTING GRADE, WHETHER SHOWN OR NOT. CONTACT CONTRACTING OFFICER TECHNICAL REPRESENTATIVE 15 DAYS PRIOR TO ANY EXCAVATION.
4. CONTRACTOR MUST COMPLY WITH THE WALLOPS FLIGHT FACILITY DIG PERMIT PROCESS. ALLOW 15 DAYS TO HAVE ANY UNDERGROUND UTILITIES LOCATED PRIOR TO EXCAVATION. HAVE THEM CONTACT THE CONTRACT OFFICER TO START THE PROCESS.
5. CONTRACTOR MUST MAINTAIN STORM DRAINAGE DURING CONSTRUCTION. PROVIDE BYPASS OR OTHER MEANS TO MAINTAIN SYSTEM FUNCTIONALITY. DO NOT ALLOW SEDIMENT TO ENTER SYSTEM DURING DEMOLITION AND CONSTRUCTION.
6. CONTRACTOR MUST USE CAUTION PERFORMING WORK AROUND LIGHTS AND ADJACENT PAVEMENT TO REMAIN. CONTRACTOR IS RESPONSIBLE FOR REPAIR OR REPLACEMENT OF DAMAGED ITEMS TO THE SATISFACTION OF THE CONTRACTING OFFICER.
7. THE AIRFIELD MUST REMAIN ACTIVE DURING CONSTRUCTION.
8. AIRCRAFT OPERATIONS MUST HAVE THE RIGHT OF WAY AT ALL TIMES.
9. PROVIDE EROSION AND SEDIMENT CONTROL, FOD (DEBRIS) CONTROL, AND TRAFFIC CONTROL MEASURES AS INDICATED.
10. THE CONTRACTOR MUST PROVIDE AND IS RESPONSIBLE FOR ALL NECESSARY EROSION AND SEDIMENT CONTROL PLANS AND PERMITS.
11. THE CONTRACTOR MUST UTILIZE WATER TO CONTROL DUST AS NECESSARY.
12. ALL CONSTRUCTION EQUIPMENT, PERSONNEL, AND SUPPLIERS MUST STAY WITH IN THE DESIGNATED CONSTRUCTION LIMITS, STAGING AREAS OR HAUL ROUTES UNLESS APPROVED BY THE AIRFIELD MANAGER. CONSTRUCTION LIMITS ARE DEFINED AS A RADIUS OR OFFSET OF 25' ON TURF AND 15' ON PAVEMENT FROM ANY REQUIRED WORK FEATURE.
13. THE CONTRACTOR MUST NOTIFY THE CONTRACTING OFFICER A MINIMUM OF 48 HOURS PRIOR TO REQUIRING ANY SECTION OF A RUNWAY OR TAXIWAY TO BE CLOSED.
14. APPROPRIATE NOTAMS WILL BE ISSUED BY THE AIRFIELD MANAGER FOR ALL RUNWAY AND TAXIWAY CLOSURES.
15. ALL CONTRACTOR PERSONNEL OPERATION VEHICLES SHALL COMPLETE THE WALLOPS FLIGHT FACILITY DRIVERS TRAINING PROGRAM PRIOR TO COMMENCING AND CONSTRUCTION ACTIVITY ON THE FLIGHT LINE.
16. CROSSING AN ACTIVE RUNWAY WILL BE PERMITTED BUT MUST BE COORDINATED THROUGH THE TOWER. THE CONTRACTOR MUST BE PROVIDED BASE RADIOS FOR COMMUNICATION WITH THE TOWER.
17. THE CONTRACTOR MUST MONITOR THE NASA WALLOPS RADIO FREQUENCY CONTINUOUSLY WHEN WORKING ON THE AIRFIELD.
18. ALL MATERIALS ARE NEW UNLESS INDICATED AS EXISTING.
19. LAYDOWN/STAGING AREA IS WITHIN 1000 FEET OF NEW WORK. CONTRACTING OFFICER WILL DEFINE LAYDOWN/STAGING AREA AND HAUL ROUTES AT PRE-CONSTRUCTION MEETING.

GENERAL NOTES (CONTINUED)

20. ANY DISCREPANCY BETWEEN THESE DRAWINGS AND THE ACTUAL FIELD CONDITIONS MUST BE BROUGHT TO THE ATTENTION OF THE CONTRACTING OFFICER BEFORE COMMENCING WORK.

GENERAL WORK NOTES

1. PROVIDE WORK AS INDICATED IN ACCORDANCE CONTRACT DOCUMENTS.
2. ISOLATED REPAIRS ARE ITEMIZED ON REPAIR SCHEDULE SHEETS.
3. REESTABLISH EXISTING JOINTS IN NEW WORK, U.N.O. FOR CONCRETE SLABS WHERE LENGTH EXCEEDS 1.5 TIMES THE WIDTH, PROVIDE JOINT AT MID LENGTH OF SLAB.
4. UPON COMPLETION OF REPAIRS (RECONSTRUCTION, RESURFACING, OVERLAYING, ISOLATED ROUTINE, ETC.), REESTABLISH EXISTING PAVEMENT MARKINGS DISTURBED. MARKING PLAN DETAILS ARE LOCATED ON MARKING DETAIL SHEETS.
5. AIRFIELD MARKINGS THAT HAVE BEEN DISTURBED DURING CONSTRUCTION MUST BE REESTABLISHED.
6. PAVEMENT SHALL BE THOROUGHLY, CLEAN AND FREE OF ALL LOOSE MATERIALS, AND PRETREATED WITH HERBICIDE TO REMOVE ALL VEGETATION, PRIOR TO PLACEMENT OF BIT. CONCRETE, CRACK SEALING, OR APPLYING SEAL COATS.
7. REESTABLISH GRADES TO EXISTING, UNLESS NOTED OTHERWISE.
8. THOROUGHLY CLEAN ALL PAVEMENT SURFACES PRIOR TO LEAVING THE WORK SITE AT THE END OF THE WORK DAY. A POWER SWEEPER AND A VACUUM TRUCK MUST BE PROVIDED BY THE CONTRACTOR AND MUST BE ON SITE DURING CONSTRUCTION. A VACUUM TRUCK IS REQUIRED ON ALL SURFACES REQUIRING MILLING. ALL OTHER FEATURES SHALL BE CLEANED WITH A POWER SWEEPER.

G-002

NATIONAL AERONAUTICS AND SPACE ADMINISTRATION
GODDARD SPACE FLIGHT CENTER
WALLOPS FLIGHT FACILITY
WALLOPS ISLAND, VIRGINIA 23337

DATE	LET.	REVISIONS	CK.	AP.

PROJECT ENGINEER — DATE :
SUBMITTED BY — DATE : 5-5-2014 — PROJECT MANAGER
NASA SAFETY — DATE 5-5-2014
FIRE PROTECTION — DATE : 5-5-2014
CONSTRUCTION MANAGEMENT — DATE : 5-5-2014
O & M — DATE : 5-5-2014
ENGINEERING APPROVAL — DATE 5-5-2014 — ENGINEERING GROUP LEADER
BRANCH APPROVAL — DATE 5-5-2014 — BRANCH HEAD

GRAPHIC SCALE 1"=500' 0' 500' 1000'
AUTOCAD – RELEASE 2010
FILE NAME: '1-1337236-G-0
SCALE 1" = 500'
SHEET 2 OF 24

WALLOPS AIRFIELD REPAIR PROJECT PHASE I
GENERAL NOTES AND HAUL ROUTE
PROJECT NUMBER: 1337236
DR. STH DATE:
CK. LMH REVISED:
DRAWING NO. 16930

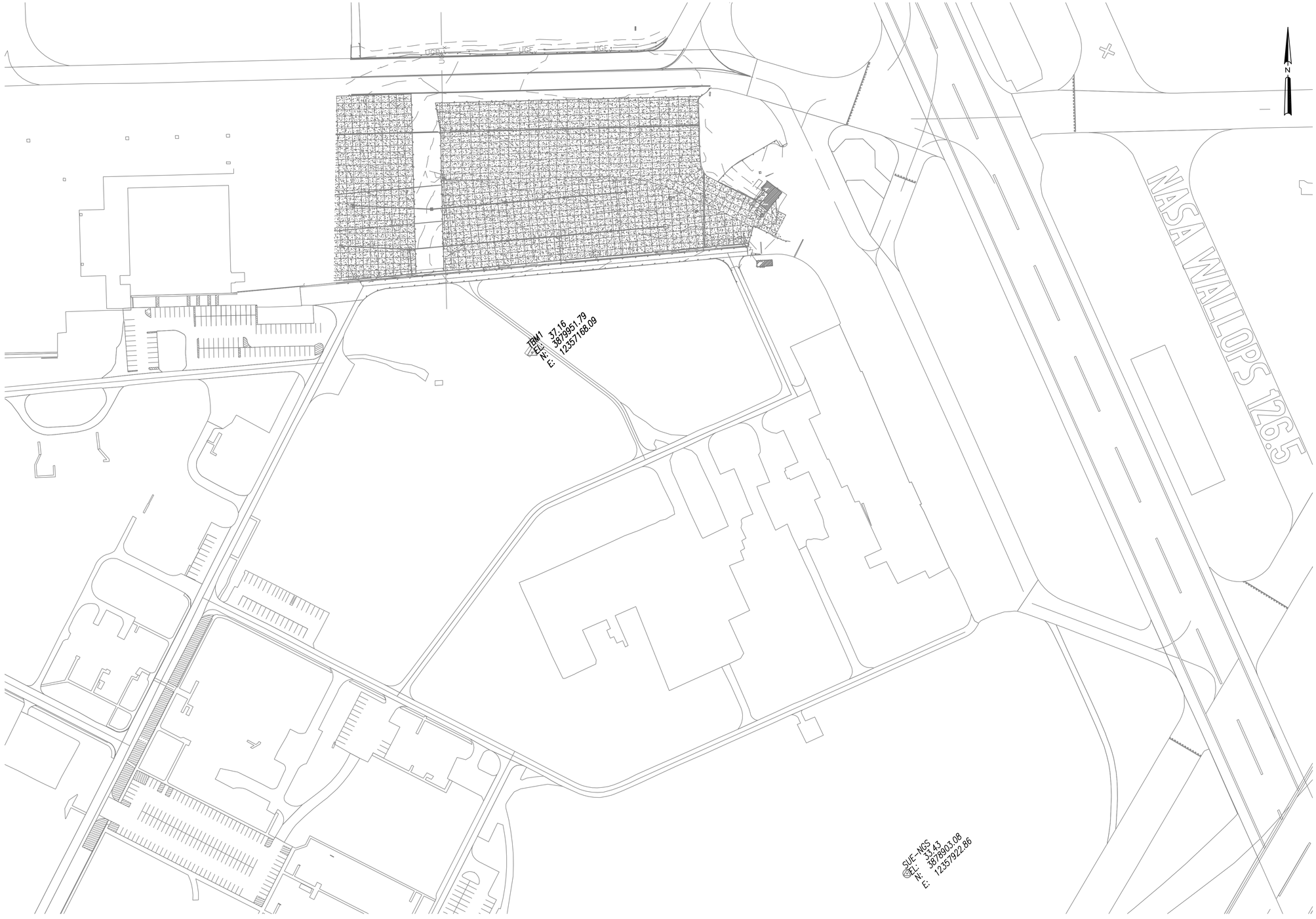

A SURVEY CONTROL PLAN
1" = 100'

SURVEY NOTES

1. TOPOGRAPHIC SURVEY DATA WAS COLLECTED AND PREPARED BY NAVFAC ATLANTIC USING TOPCON GR-5 EQUIPMENT BETWEEN THE DATES OF DECEMBER 2013 AND FEBRUARY 2014.

1.1. COORDINATES AND ELEVATION ARE SHOWN IN US SURVEY FEET.

1.2. THE GEOID MODEL USED IS GEOID12A GRID.

1.3. THE HORIZONTAL DATUM USED IS NAD83(2011).

1.4. THE VERTICAL DATUM USED IS NAVD88 COMPUTED USING GEOID MODEL GEOID12A.

1.5. THE PROJECTION USED IS STATE PLANE COORDINATES (83) VIRGINIA SOUTH.

2. TBM1 HORIZONTAL AND VERTICAL VALUES HAVE BEEN FOUND BY TAKING THE WEIGHTED AVERAGE OF 21 HOURS OF OPUS SOLUTIONS OVER SIX SET-UPS FROM DATA TAKEN ON 12 DECEMBER, 2013 (AT 2), 18 FEBRUARY, 2014, 19 FEBRUARY, 2014, 20 FEBRUARY, 2014, AND 21 FEBRUARY, 2014.

3. THE SURVEY CONTROL POINT INFORMATION IS BELOW:

3.2. POINT NAME: TBM1
NORTHING: 3,879,951.79
EASTING: 12,357,168.09
ORHTO HEIGHT: 37.16
DESCRIPTION: EXPOSED REBAR IN CONCRETE DUMPSTER PAD 220 FEET SOUTH OF THE INTERSECTION OF HARPOLL STREET AND JENSEN STREET ON JENSEN STREET.

3.1. POINT NAME: SUE
NORTHING: 3,878,903.08
EASTING: 12,357,922.86
ORTHO HEIGHT: 33.43 (10.19 METERS)
DESCRIPTION: STAINLESS STEEL ROD IN SLEEVE

V-100

NATIONAL AERONAUTICS AND SPACE ADMINISTRATION
GODDARD SPACE FLIGHT CENTER
WALLOPS FLIGHT FACILITY
WALLOPS ISLAND, VIRGINIA 23337

DATE	LET.	REVISIONS	CK.	AP.

PROJECT ENGINEER — DATE :
SUBMITTED BY — DATE : 5-5-2014 — PROJECT MANAGER
NASA SAFETY — DATE 5-5-2014
FIRE PROTECTION — DATE : 5-15-2014
CONSTRUCTION MANAGEMENT — DATE : 5-5-2014
O & M — DATE : 5-5-2014
ENGINEERING APPROVAL — DATE 5-5-2014 — ENGINEERING GROUP LEADER
BRANCH APPROVAL — DATE 5-5-2014 — BRANCH HEAD

GRAPHIC SCALE 1"=100' 0' 100' 200'
AUTOCAD – RELEASE 2010
FILE NAME: '1-1337236-V-1
SCALE
SHEET 3 OF 24

WALLOPS AIRFIELD REPAIR PROJECT PHASE I
SURVEY CONTROL PLAN
PROJECT NUMBER: 1337236
DR. STH DATE:
CK. LMH REVISED:
DRAWING NO. 16931

LEGEND

EXISTING

- LIMIT OF CONSTRUCTION
- CONTROL POINT (BENCH MARK) — BM EL: 0.00 N: 3880880.62 E: 12367304.36
- TEMPORARY BENCH MARK — TBM EL: 0.00 N: 3880859.79 E: 12367304.36
- EXISTING SPOT ELEVATION — × 0.00
- EXISTING MAJOR CONTOUR — 2.00
- EXISTING MINOR CONTOUR — 1.50
- EXISTING PCC PAVEMENT AND JOINTS
- EXISTING AC PAVEMENT
- EXISTING STORM MANHOLE
- EXISTING STORM DROP INLET
- EXISTING STORM PIPE
- EXISTING HANDHOLE — E
- EXISTING UNDERGROUND ELECTRIC — UGE
- EXISTING ELEVATED TAXIWAY EDGE LIGHT
- EXISTING LIGHTED TAXIWAY SIGN
- EXISTING CONCRETE CURB
- EXISTING CONCRETE CURB AND GUTTER
- EXISTING YELLOW PAVEMENT MARKINGS
- EXISTING CLEANOUT
- EXISTING BOLLARD
- EXISTING CHAIN LINK FENCE — X
- EXISTING BUILDING
- EXISTING STATIC GROUND RECEPTACLE
- EXISTING ELECTRICAL MANHOLE — E
- EXISTING SANITATION MANHOLE — S

NEW WORK

- LIMIT OF CONSTRUCTION
- NEW SPOT ELEVATION — + 0.00
- NEW MAJOR CONTOUR — 2.00
- NEW MINOR CONTOUR — 1.50
- NEW PCC PAVEMENT AND JOINTS
- NEW AC PAVEMENT SECTION
- NEW AC OVERLAY OVER EXISTING MILLED AC PAVEMENT
- NEW AC OVERLAY OVER EXISTING GROUND PCC PAVEMENT
- REGRADE AND SEED TURF
- NEW ROLLED CURB
- NEW MOORING EYE
- NEW STATIC GROUND RECEPTACLE
- NEW ELECTRICAL HANDHOLE — E
- NEW DROP INLET
- NEW STORM PIPE
- NEW YELLOW PAVEMENT MARKINGS
- NEW CHAIN LINK FENCE — X
- NEW MANHOLE — D

DEMOLITION AND ESC

- LIMIT OF CONSTRUCTION
- REMOVE VARIABLE THICKNESS ASPHALT OVERLAY OVER 6 TO 7 INCH PCC PAVEMENT AND UNDERLYING BASE MATERIAL
- MILL AS REQUIRED
- REMOVE VARIABLE THICKNESS ASPHALT OVERLAY AND GRIND PCC
- REMOVE EXISTING STORM PIPE
- REMOVE EXISTING CHAIN LINK FENCE — X
- DROP INLET PROTECTION
- DEBRIS BARRIER — FB
- SILT FENCE — SF

ABBREVIATIONS

ABAND	ABANDONED
BM	BENCH MARK
BIT	BITUMINOUS
CB	CATCH BASIN
CL	CENTER LINE
CLF	CHAIN LINK FENCE
CONC	CONCRETE
COND	CONDUIT
CO	CONTRACTING OFFICER
CJ	CONTRACTION JOINT
CVR	COVER
DCJ	DOWELED CONTRACTION JOINT
DKJ	DOWELED CONSTRUCTION JOINT
DIA	DIAMETER
ELEC	ELECTRIC
EXST, E	EXISTING
ES	EXISTING STORM DRAINAGE PIPE
ESC	EROSION AND SEDIMENT CONTROL
EJ	EXPANSION JOINT
FT	FEET
GOV'T	GOVERNMENT
H	HEIGHT, PAVEMENT THICKNESS
IN	INCH/ES
LBS	POUNDS
MH	MAN HOLE
MAX	MAXIMUM
MTL	METAL
MIN	MINIMUM
OC	ON CENTER
PCC	PORTLAND CEMENT CONCRETE
PSI	POUNDS PER SQUARE INCH
PVC	POLYVINYL CHLORIDE
R	REINFORCED CONCRETE PAVEMENT
R/W	RUNWAY
SS	SLEEPER SLAB
STA	STATION
S	STORM SEWER
T/W	TAXIWAY
TEL	TELEPHONE
TBM	TEMPORARY BENCH MARK
TE	THICKENED EDGE
TEB	THICKENED EDGE BUTT JOINT
TEJ	THICKENED EDGE JOINT
TOS	TOE OF SLOPE
TOB	TOP OF BANK
TDZ	TOUCH DOWN ZONE
TYP	TYPICAL
UG	UNDER GROUND
UNO	UNLESS NOTED OTHERWISE
WTR	WATER
W	WIDTH

STORM STRUCTURE SCHEDULE

1. USE DETAIL C ON SHEET CS502 FOR ALL DROP INLET STRUCTURES.
2. USE DETAIL E ON SHEET CS502 FOR ALL MAN HOLES.

S1 — NEW DROP INLET
RIM = 36.22
INV 15" (SW) = 31.72
INV 15" (E) = 31.82

S2 — NEW MAN HOLE
RIM = 36.76
INV 15" (W) = 32.23

S3 — NEW MAN HOLE
RIM = 36.17
INV 15" (W) = 31.32
INV 15" (E) = 31.48
INV 15" (NE) = 31.42

S4 — NEW DROP INLET
RIM = 34.76
INV 15" (W) = 31.08
INV 15" (E) = 31.18

S5 — NEW MAN HOLE
RIM = 35.48
INV 15" (W) = 31.54
INV 12" (E) = 32.40
INV 9" (S) = 32.60

SECTION OR DETAIL SYMBOL

A
C000

LETTER INDICATES SECTION, PROFILE, OR DETAIL

SHEET NUMBER WHERE SECTION, PROFILE, OR DETAIL IS SHOWN

EROSION & SEDIMENT CONTROL

1. THE CONTRACTOR MUST OBTAIN A GENERAL CONSTRUCTION PERMIT FROM THE VIRGINIA DEPARTMENT OF ENVIRONMENTAL QUALITY.
2. UNLESS OTHERWISE INDICATED, ALL VEGETATIVE AND STRUCTURAL EROSION AND SEDIMENT CONTROL PRACTICES MUST BE CONSTRUCTED AND MAINTAINED ACCORDING TO MINIMUM SPECIFIED STANDARDS
3. THE CONTRACTOR MUST APPLY PERMANENT OR TEMPORARY SOIL STABILIZATION TO ALL DISTURBED AREAS WITHIN 7 DAYS AFTER FINAL GRADE IS REACHED ON ANY PORTION OF THE SITE. SOIL STABILIZATION MUST ALSO BE APPLIED TO DISTURBED AREAS WHICH MAY NOT BE AT FINAL GRADE BUT WHICH WILL REMAIN UNDISTURBED FOR LONGER THAN 30 DAYS. SOIL STABILIZATION MEASURES INCLUDE VEGETATIVE ESTABLISHMENT, MULCHING, AND THE EARLY APPLICATION OF GRAVEL BASE MATERIAL ON AREAS TO BE PAVED.
4. ALL EROSION AND SEDIMENT CONTROL MEASURES ARE TO BE PLACED PRIOR TO CONSTRUCTION.
5. THE CONTRACTOR MUST INSPECT ALL EROSION CONTROL MEASURES PERIODICALLY AND AFTER EACH RUNOFF PRODUCING RAINFALL EVENT. ANY NECESSARY REPAIRS TO MAINTAIN THE EFFECTIVENESS OF THE EROSION CONTROL DEVICES AND CLEANUP OF SEDIMENTATION ARE THE RESPONSIBILITY OF THE CONTRACTOR AND MUST BE MADE IMMEDIATELY.
6. THE CONTRACTOR MUST LIMIT SITE ACCESS BY CONSTRUCTION VEHICLES TO ENTRANCES PROTECTED BY A STONE CONSTRUCTION ENTRANCE OR AN APPROVED COMPARABLE CONTROL MEASURE. SEDIMENT MUST BE REMOVED FROM PAVED AREAS ON A CONTINUOUS BASIS.
7. STOCK PILES OF SOIL AND OTHER ERODIBLE MATERIALS MUST BE STABILIZED OR PROTECTED WITH SEDIMENT TRAPPING MEASURES. THE CONTRACTOR IS RESPONSIBLE FOR THE TEMPORARY PROTECTION AND PERMANENT STABILIZATION FOR STOCKPILES ON SITE AS WELL AS FOR MATERIALS TRANSPORTED FROM THE PROJECT SITE.
8. THE CONTRACTOR MUST MONITOR AND TAKE PRECAUTIONS TO CONTROL DUST INCLUDING (BUT NOT LIMITED TO) USE OF WATER, MULCH, OR CHEMICAL DUST ADHESIVES AND CONTROL OF CONSTRUCTION SITE TRAFFIC.
9. EFFLUENT FROM DEWATERING OPERATIONS MUST BE FILTERED OR PASSED THROUGH AN APPROVED SEDIMENT TRAPPING DEVICE, OR BOTH, AND DISCHARGED IN A MANNER THAT DOES NOT ADVERSELY AFFECT ADJACENT PROPERTIES, WETLANDS, WATERWAYS, OR THE STORM DRAINAGE SYSTEM.
10. THE CONTRACTOR IS RESPONSIBLE FOR INSTALLATION AND MAINTENANCE OF ANY ADDITIONAL CONTROL MEASURES NECESSARY TO PREVENT EROSION AND SEDIMENTATION AS DETERMINED NECESSARY BY THE CONTRACTING OFFICER.
11. TEMPORARY EROSION AND SEDIMENT CONTROL MEASURES ARE NOT TO BE REMOVED UNTIL ALL DISTURBED AREAS ARE STABILIZED. AFTER STABILIZATION IS COMPLETE, ALL MEASURES MUST BE REMOVED WITHIN 30 DAYS. TRAPPED SEDIMENT MUST BE SPREAD AND SEEDED.

POST CONSTRUCTION SURVEY

1. UPON COMPLETION OF OVERLAYS AND RECONSTRUCTION, THE CONTRACTOR MUST PERFORM A POST–CONSTRUCTION TOPOGRAPHIC SURVEY USING THE SAME LOCATION AND INTERVALS AS THE EXISTING CONDITIONS AND DEMOLITION SHEETS SHOW.
2. THE POST CONSTRUCTION SURVEY IS TO VERIFY PLANED GRADES AND ELEVATIONS WERE ACHIEVED.
3. THE ELEVATIONS OF POINTS SURVEYED MUST BE SHOWN TO 0.01 FEET AND NOTED ON A LOCATION PLAN SHOWING ALL SURVEY POINTS. INCORPORATE SURVEY IN THE AS–BUILT DRAWINGS.

C–001

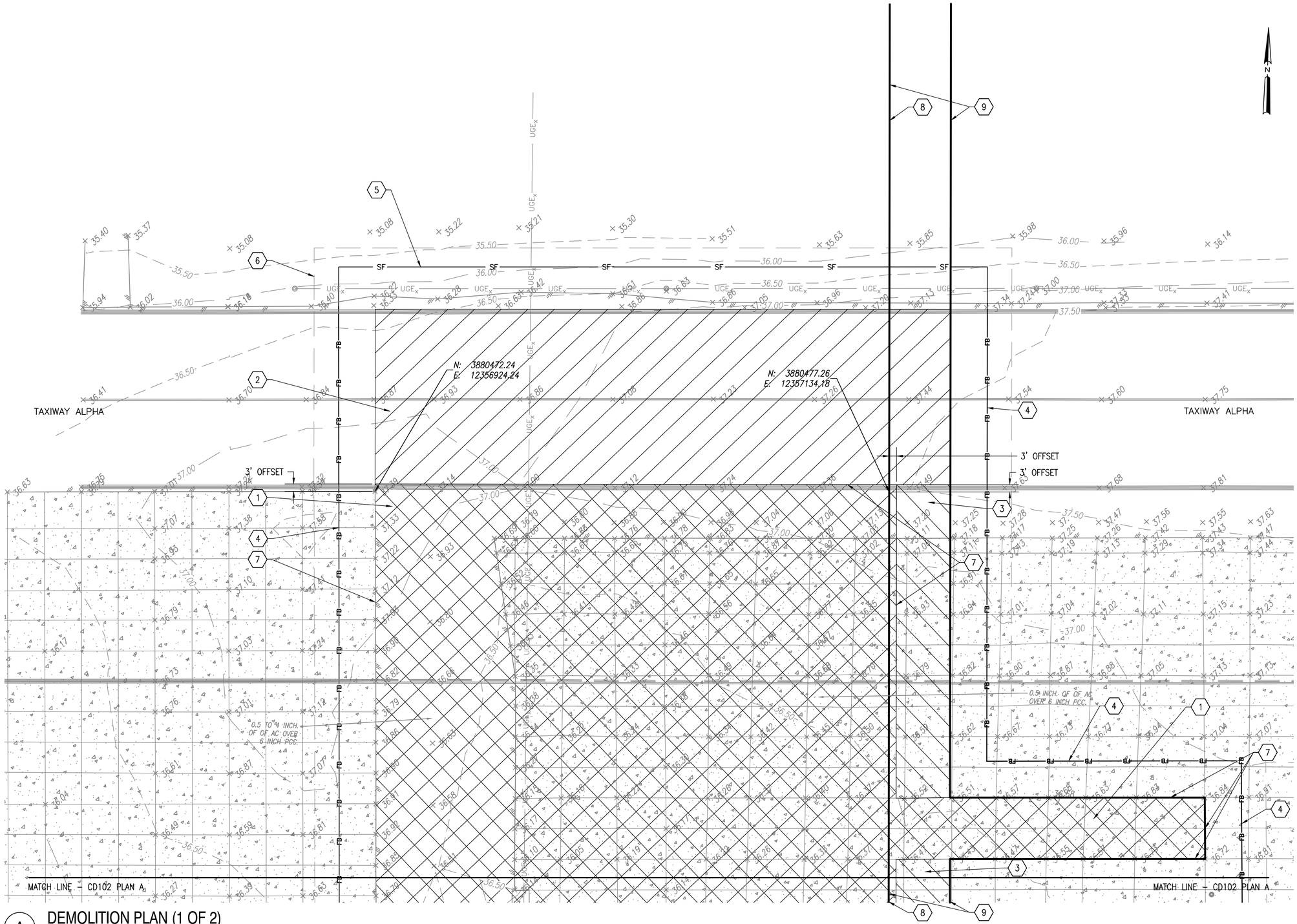

A DEMOLITION PLAN (1 OF 2)

1" = 20'

DEMOLITION NOTES

1. REMOVE 0.5 TO 4 INCH VARIABLE THICKNESS AC OVERLAY OVER 6 TO 10 INCH PCC PAVEMENT AND UNDERLYING BASE MATERIAL AS REQUIRED TO PROVIDE NEW PCC PAVEMENT SECTION. FOR BASIS OF BID ASSUME AVERAGE SECTION THICKNESS TO BE $2\frac{1}{4}$ INCHES OF AC OVERLAY OVER 8 INCHES OF PCC.
2. MILL AS REQUIRED TO PROVIDE VARIABLE THICKNESS AC OVERLAY. FOR BASIS OF BID ASSUME AVERAGE MILL DEPTH OF $1\frac{1}{4}$ INCHES.
3. REMOVE VARIABLE THICKNESS ASPHALT OVERLAY AND GRIND PCC AS REQUIRED TO PROVIDE AC OVERLAY.
4. PROVIDE DEBRIS BARRIER THROUGH ALL PHASES OF CONSTRUCTION, SEE DETAIL C, SHEET CD501.
5. PROVIDE SILT FENCE THROUGH ALL PHASES OF CONSTRUCTION, SEE DETAIL A, SHEET CD501.
6. LIMIT OF CONSTRUCTION.
7. PROVIDE PARALLEL SAWED JOINT AT INTERFACE OF PCC OR AC OVER PCC TO REMAIN. SEE DETAIL F, SHEET CD501.
8. MATCH LINE FOR OPTIONS 1, 2 AND 3.
9. BASE BID WORK BETWEEN LINES DENOTED MUST BE REMOVED FROM OPTION 1, 2 AND 3 BID PRICES.

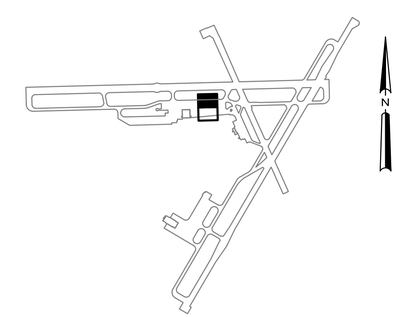

B KEY PLAN

NTS

CD101

NATIONAL AERONAUTICS AND SPACE ADMINISTRATION
GODDARD SPACE FLIGHT CENTER
WALLOPS FLIGHT FACILITY
WALLOPS ISLAND, VIRGINIA 23337

DATE	LET.	REVISIONS	CK.	AP.

PROJECT ENGINEER — DATE :
SUBMITTED BY — DATE : 5-5-2014
PROJECT MANAGER

NASA SAFETY — DATE 5-5-2014
FIRE PROTECTION — DATE : 5-5-2014

CONSTRUCTION MANAGEMENT — DATE : 5-5-2014
O & M — DATE : 5-5-2014

ENGINEERING APPROVAL — DATE 5-5-2014
ENGINEERING GROUP LEADER
BRANCH APPROVAL — DATE 5-5-2014
BRANCH HEAD

GRAPHIC SCALE 1"=20' 0' 20' 40'

AUTOCAD – RELEASE 2010
FILE NAME: '1-1337236-CD1

SCALE 1" = 20'
SHEET 5 OF 24

WALLOPS AIRFIELD REPAIR PROJECT
PHASE I
DEMOLITION PLAN

PROJECT NUMBER: 1337236
DR. STH
CK. LMH
DATE:
REVISED:

DRAWING NO. 16933

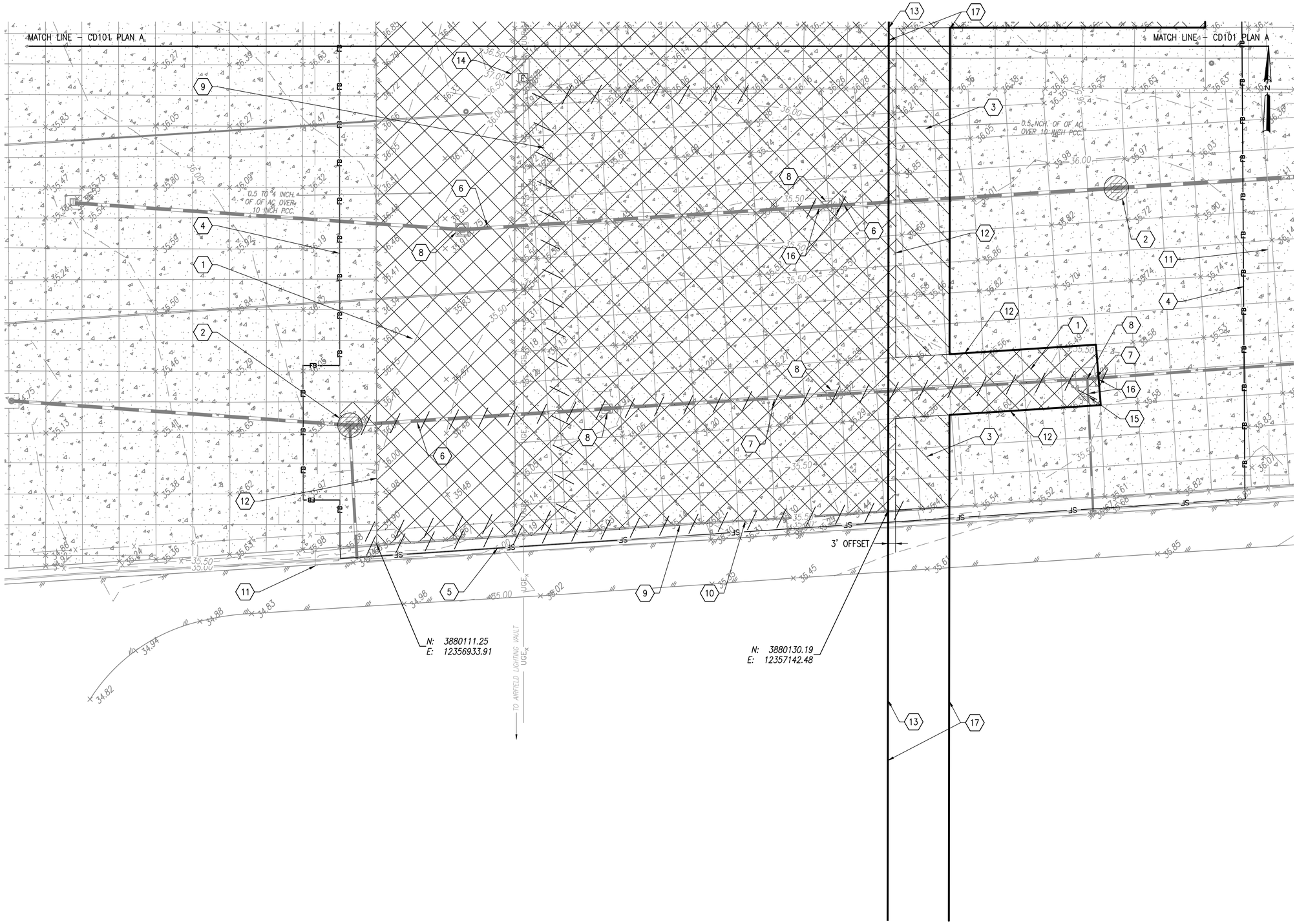

DEMOLITION NOTES

1. REMOVE 0.5 TO 4 INCH VARIABLE THICKNESS AC OVERLAY OVER 6 TO 10 INCH PCC PAVEMENT AND UNDERLYING BASE MATERIAL AS REQUIRED TO PROVIDE NEW PCC AND AC PAVEMENT SECTIONS. FOR BASIS OF BID ASSUME AVERAGE SECTION THICKNESS TO BE 2¼ INCHES OF AC OVERLAY OVER 8 INCHES OF PCC.
2. PROVIDE SEDIMENT CONTROL MEASURES FOR DROP INLETS THROUGH ALL PHASES OF CONSTRUCTION, SEE DETAIL B, SHEET CD501.
3. REMOVE VARIABLE THICKNESS ASPHALT OVERLAY AND GRIND PCC AS REQUIRED TO PROVIDE AC OVERLAY.
4. PROVIDE DEBRIS BARRIER THROUGH ALL PHASES OF CONSTRUCTION, SEE DETAIL C, SHEET CD501.
5. PROVIDE SILT FENCE THROUGH ALL PHASES OF CONSTRUCTION, SEE DETAIL A, SHEET CD501.
6. REMOVE EXISTING 15 INCH RCP AS REQUIRED.
7. REMOVE EXISTING 12 INCH RCP AS REQUIRED.
8. REMOVE STORM DRAINAGE STRUCTURE.
9. REMOVE EXISTING CHAIN LINK FENCE WITHIN CONSTRUCTION LIMITS.
10. REMOVE EXISTING CURB WITHIN CONSTRUCTION LIMITS.
11. LIMIT OF CONSTRUCTION.
12. PROVIDE PARALLEL SAWED JOINT AT INTERFACE OF PCC OR AC OVER PCC TO REMAIN. SEE DETAIL F, SHEET CD501.
13. MATCH LINE FOR OPTIONS 1, 2 AND 3.
14. ELECTRICAL HAND HOLE AND STRUCTURE TO REMAIN, TOP OF HAND HOLE TO BE RECONSTRUCTED TO MEET FINISH GRADE.
15. REMOVE EXISTING 9 INCH RCP AS REQUIRED.
16. REMOVE STORM PIPE TO NEAREST PIPE JOINT.
17. BASE BID WORK BETWEEN LINES DENOTED MUST BE REMOVED FROM OPTION 1, 2 AND 3 BID PRICES.

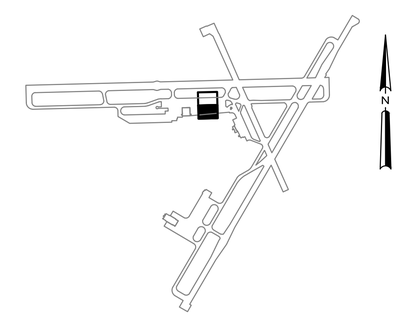

A DEMOLITION PLAN (2 OF 2)
1" = 20'

B KEY PLAN
NTS

CD102

NATIONAL AERONAUTICS AND SPACE ADMINISTRATION
GODDARD SPACE FLIGHT CENTER
WALLOPS FLIGHT FACILITY
WALLOPS ISLAND, VIRGINIA 23337

DATE	LET.	REVISIONS	CK.	AP.

PROJECT ENGINEER — DATE :
SUBMITTED BY — DATE : 5-5-2014
PROJECT MANAGER
NASA SAFETY — DATE 5-5-2014
FIRE PROTECTION — DATE : 5-5-2014
CONSTRUCTION MANAGEMENT — DATE : 5-5-2014
O & M — DATE : 5-5-2014
ENGINEERING APPROVAL — DATE 5-5-2014
ENGINEERING GROUP LEADER
BRANCH APPROVAL — DATE 5-5-2014
BRANCH HEAD

GRAPHIC SCALE 1"=20' 0' 20' 40'
AUTOCAD – RELEASE 2010
FILE NAME: '1-1337236-CD1
SCALE 1" = 20'
SHEET 6 OF 24

WALLOPS AIRFIELD REPAIR PROJECT PHASE I
DEMOLITION PLAN
PROJECT NUMBER: 1337236
DR. STH
CK. LMH
DATE:
REVISED:
DRAWING NO. 16934

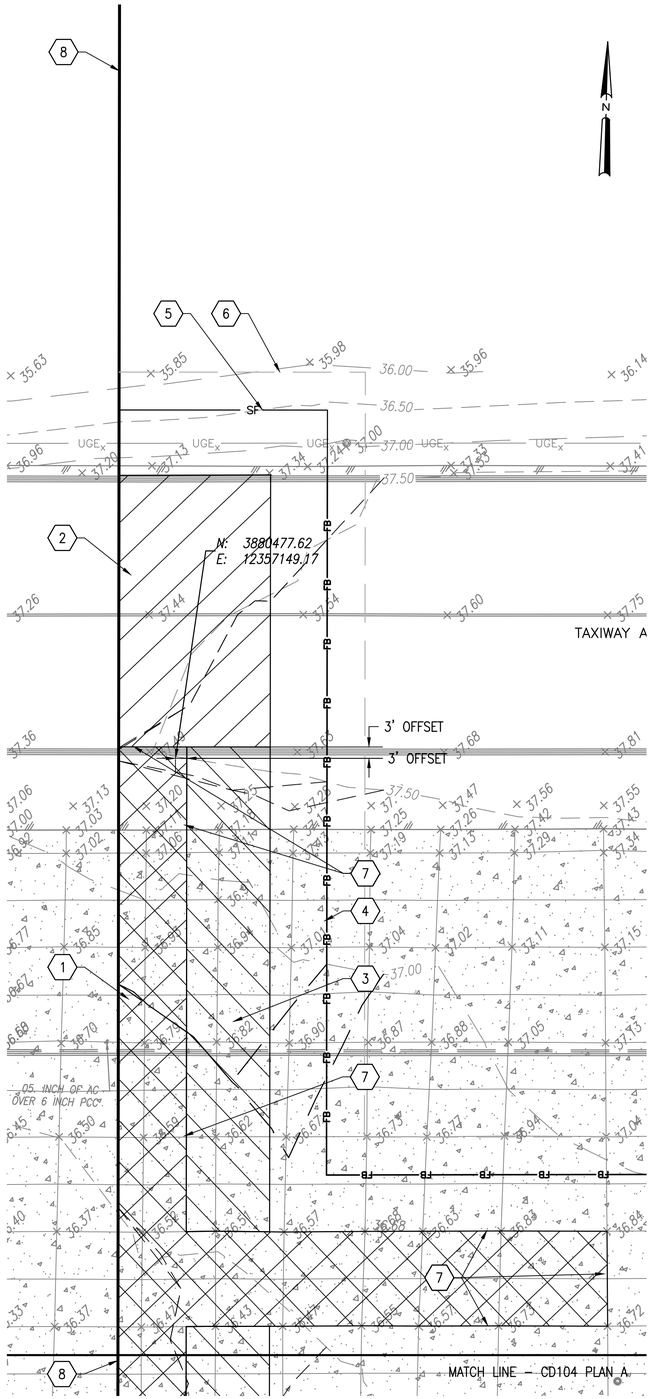

A DEMOLITION PLAN - OPTION 1 (1 OF 2)
1" = 20'

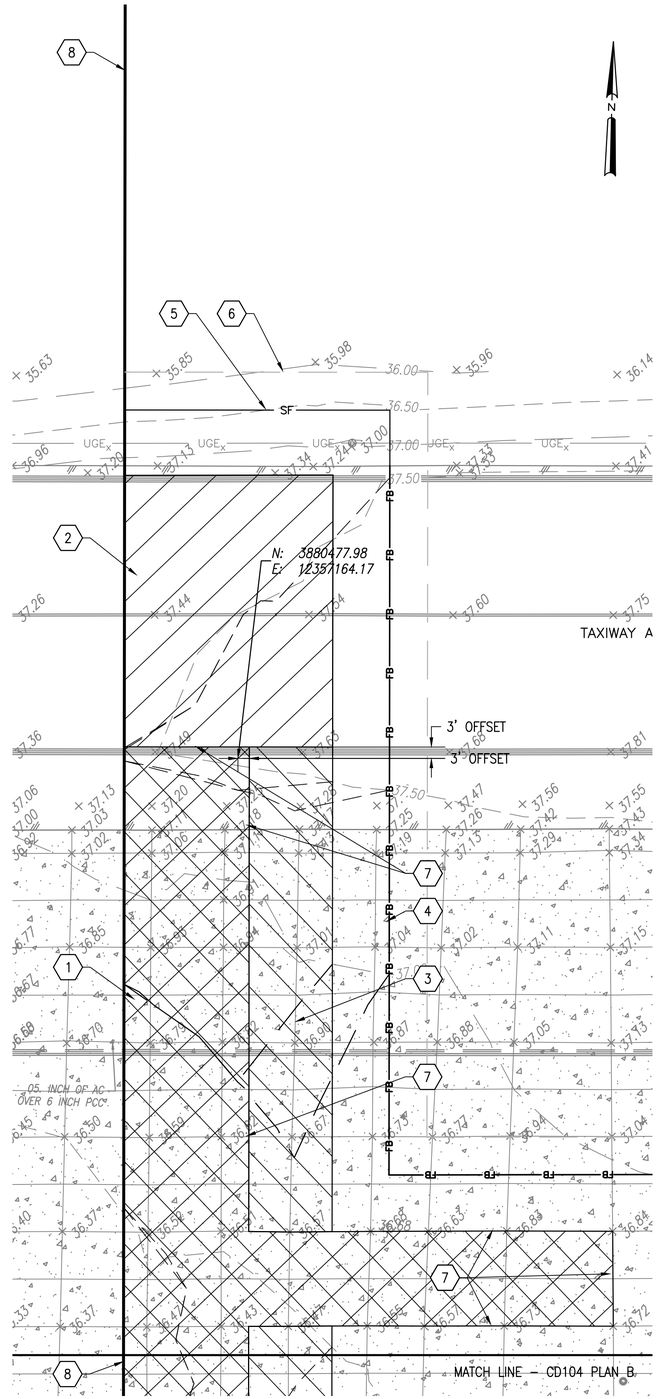

B DEMOLITION PLAN - OPTION 2 (1 OF 2)
1" = 20'

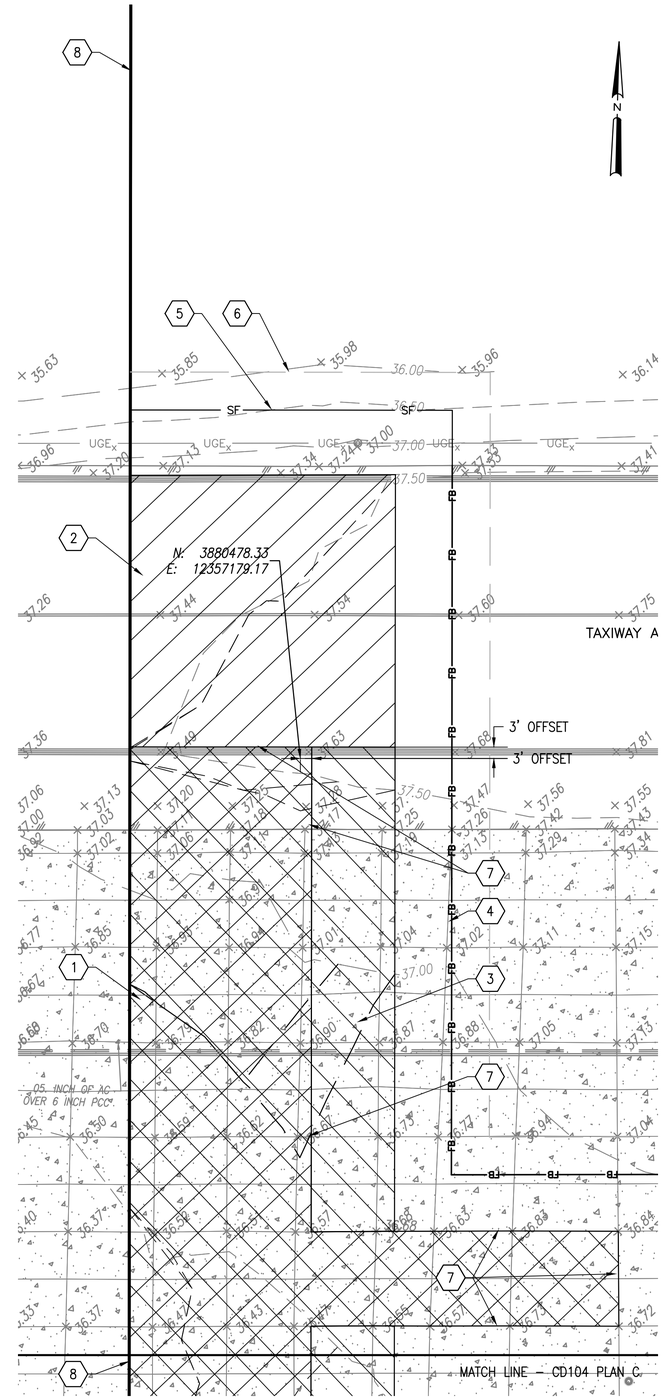

C DEMOLITION PLAN - OPTION 3 (1 OF 2)
1" = 20'

DEMOLITION NOTES

1. REMOVE 0.5 AC OVERLAY OVER 6 TO 10 INCH PCC PAVEMENT AND UNDERLYING BASE MATERIAL AS REQUIRED TO PROVIDE NEW PCC PAVEMENT SECTION. FOR BASIS OF BID ASSUME AVERAGE SECTION THICKNESS TO BE ½ INCHES OF AC OVERLAY OVER 8 INCHES OF PCC.
2. MILL AS REQUIRED TO PROVIDE VARIABLE THICKNESS AC OVERLAY. FOR BASIS OF BID ASSUME AN AVERAGE MILL DEPTH OF 2 INCHES.
3. REMOVE VARIABLE THICKNESS ASPHALT OVERLAY AND GRIND PCC AS REQUIRED TO PROVIDE AC OVERLAY.
4. PROVIDE DEBRIS BARRIER THROUGH ALL PHASES OF CONSTRUCTION, SEE DETAIL C, SHEET CD501.
5. PROVIDE SILT FENCE THROUGH ALL PHASES OF CONSTRUCTION, SEE DETAIL A, SHEET CD501.
6. LIMIT OF CONSTRUCTION.
7. PROVIDE PARALLEL SAWED JOINT AT INTERFACE OF PCC OR AC OVER PCC TO REMAIN. SEE DETAIL F, SHEET CD501.
8. MATCH LINE FOR OPTIONS 1, 2 AND 3.

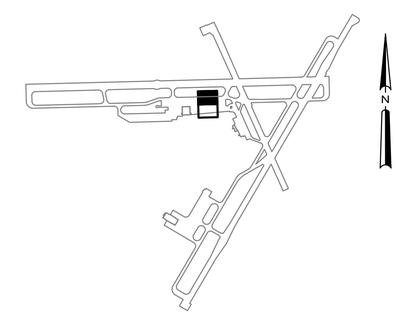

D KEY PLAN
NTS

CD103

NATIONAL AERONAUTICS AND SPACE ADMINISTRATION
GODDARD SPACE FLIGHT CENTER
WALLOPS FLIGHT FACILITY
WALLOPS ISLAND, VIRGINIA 23337

DATE	LET.	REVISIONS	CK.	AP.

PROJECT ENGINEER — DATE :
SUBMITTED BY — DATE : 5-5-2014
PROJECT MANAGER

NASA SAFETY — DATE 5-5-2014
FIRE PROTECTION — DATE : 5-5-2014

CONSTRUCTION MANAGEMENT — DATE : 5-5-2014
O & M — DATE : 5-5-2014

ENGINEERING APPROVAL — DATE 5-5-2014
ENGINEERING GROUP LEADER
BRANCH APPROVAL — DATE 5-5-2014
BRANCH HEAD

GRAPHIC SCALE 1"=20' 0' 20' 40'
AUTOCAD – RELEASE 2010
FILE NAME: '1-1337236-CD1
SCALE 1" = 20'
SHEET 7 OF 24

WALLOPS AIRFIELD REPAIR PROJECT
PHASE I
DEMOLITION PLAN
PROJECT NUMBER: 1337236
DR. STH DATE:
CK. LMH REVISED:
DRAWING NO. 16935

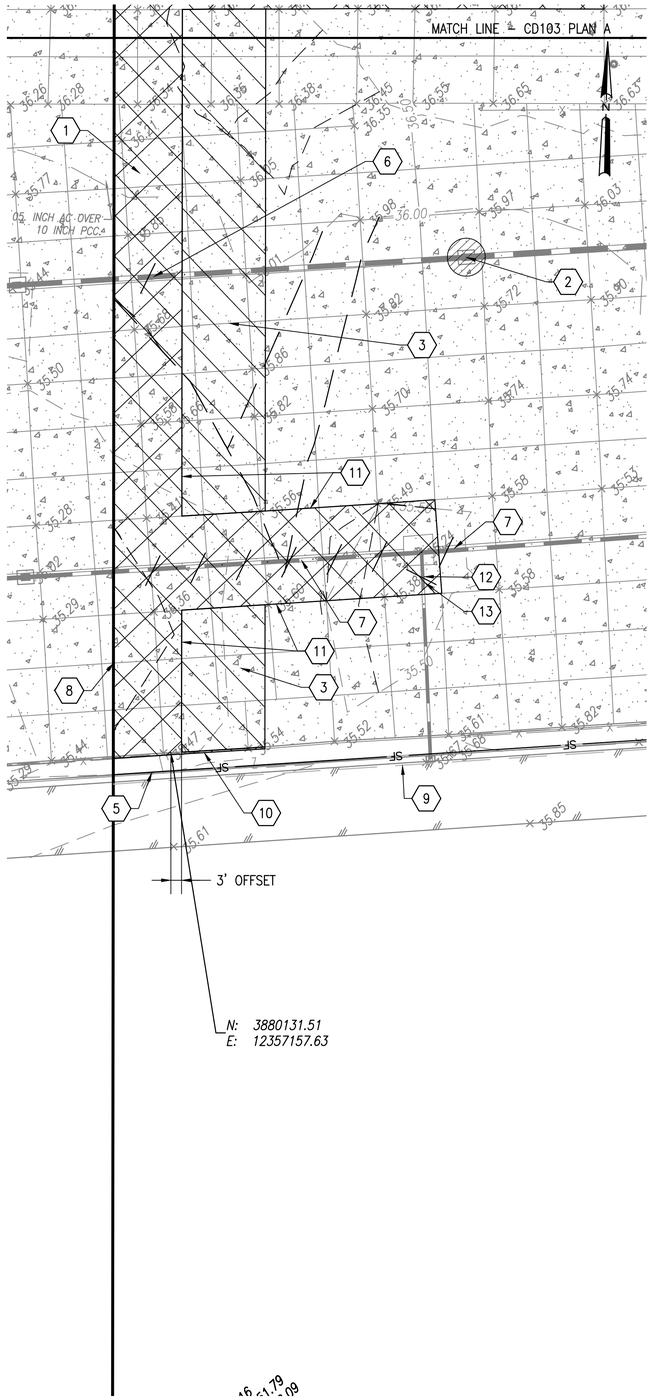

A DEMOLITION PLAN - OPTION 1 (2 OF 2)
1" = 20'

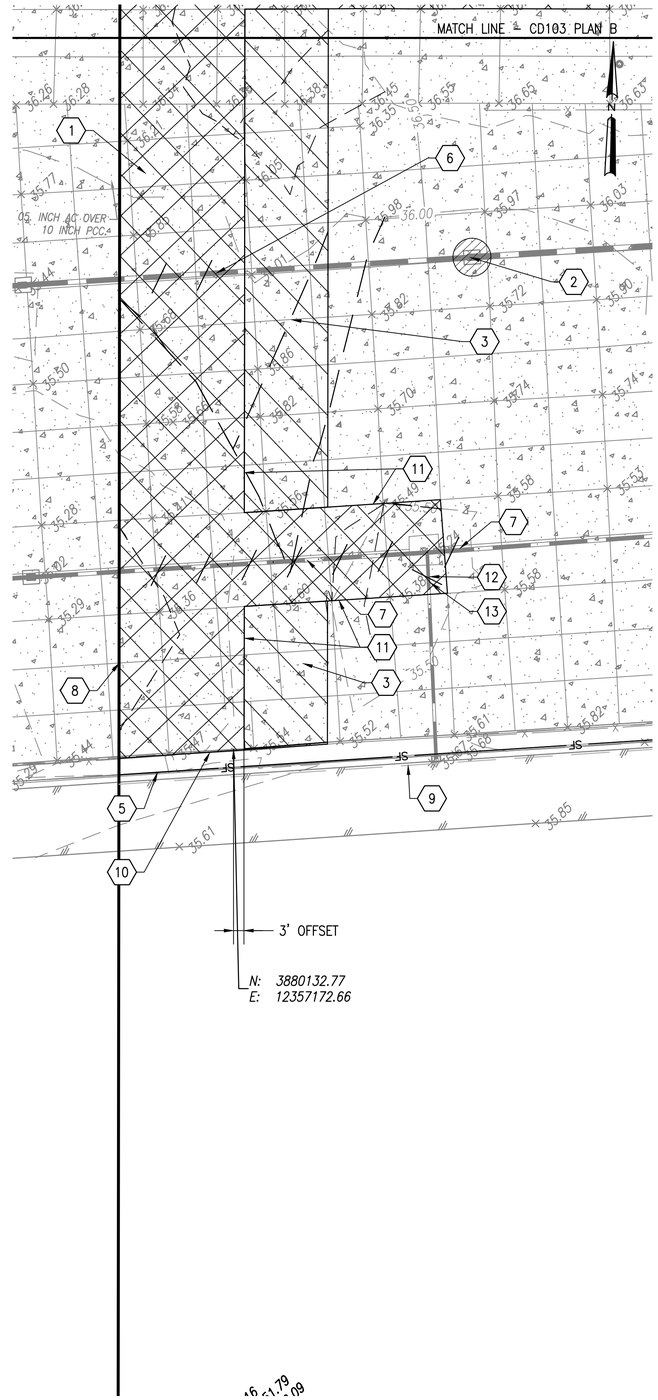

B DEMOLITION PLAN - OPTION 2 (2 OF 2)
1" = 20'

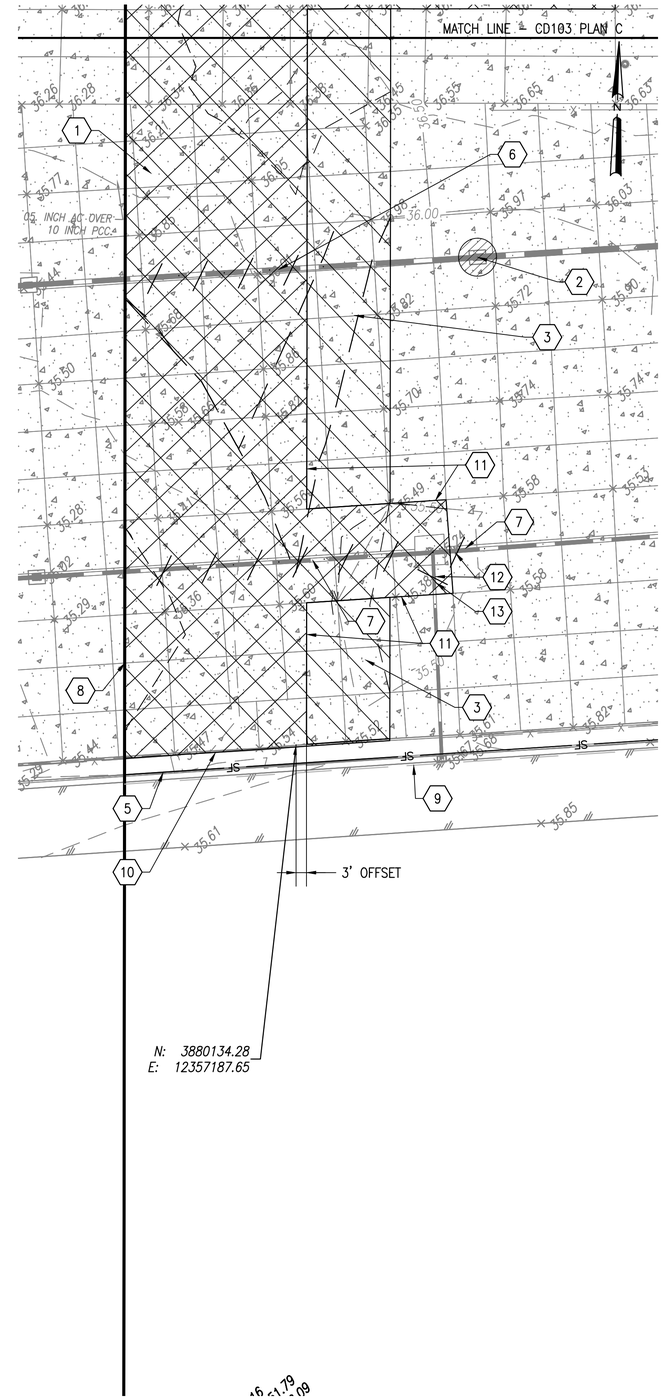

C DEMOLITION PLAN - OPTION 3 (2 OF 2)
1" = 20'

DEMOLITION NOTES

1. REMOVE 0.5 THICKNESS AC OVERLAY OVER 6 TO 10 INCH PCC PAVEMENT AND UNDERLYING BASE MATERIAL AS REQUIRED TO PROVIDE NEW PCC AND AC PAVEMENT SECTIONS. FOR BASIS OF BID ASSUME AVERAGE SECTION THICKNESS TO BE ½ INCH OF AC OVERLAY OVER 8 INCHES OF PCC.
2. PROVIDE SEDIMENT CONTROL MEASURES FOR DROP INLETS THROUGH ALL PHASES OF CONSTRUCTION, SEE DETAIL B, SHEET CD501.
3. REMOVE VARIABLE THICKNESS ASPHALT OVERLAY AND GRIND PCC AS REQUIRED TO PROVIDE AC OVERLAY.
4. PROVIDE DEBRIS BARRIER THROUGH ALL PHASES OF CONSTRUCTION, SEE DETAIL C, SHEET CD501.
5. PROVIDE SILT FENCE THROUGH ALL PHASES OF CONSTRUCTION, SEE DETAIL A, SHEET CD501.
6. REMOVE EXISTING 15 INCH RCP.
7. REMOVE EXISTING 12 INCH RCP.
8. MATCH LINE FOR OPTIONS 1, 2 AND 3.
9. LIMIT OF CONSTRUCTION.
10. REMOVE EXISTING CURB.
11. PROVIDE PARALLEL SAWED JOINT AT INTERFACE OF PCC OR AC OVER PCC TO REMAIN. SEE DETAIL F, SHEET CD501.
12. REMOVE STORM PIPE TO NEAREST PIPE JOINT.
13. REMOVE EXISTING 9 INCH RCP.

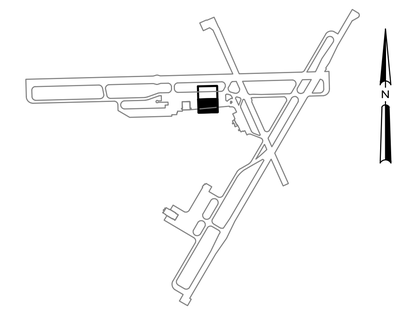

D KEY PLAN
NTS

CD104

NATIONAL AERONAUTICS AND SPACE ADMINISTRATION
GODDARD SPACE FLIGHT CENTER
WALLOPS FLIGHT FACILITY
WALLOPS ISLAND, VIRGINIA 23337

DATE	LET.	REVISIONS	CK.	AP.

PROJECT ENGINEER — DATE :
SUBMITTED BY — DATE : 5-5-2014
PROJECT MANAGER
NASA SAFETY — DATE 5-5-2014
FIRE PROTECTION — DATE : 5-5-2014
CONSTRUCTION MANAGEMENT — DATE : 5-5-2014
O & M — DATE : 5-5-2014
ENGINEERING APPROVAL — DATE 5-5-2014
ENGINEERING GROUP LEADER
BRANCH APPROVAL — DATE 5-5-2014
BRANCH HEAD

GRAPHIC SCALE 1"=20' 0' 20' 40'
AUTOCAD – RELEASE 2010
FILE NAME: '1-1337236-CD1
SCALE 1" = 20'
SHEET 8 OF 24

WALLOPS AIRFIELD REPAIR PROJECT
PHASE I
DEMOLITION PLAN

PROJECT NUMBER: 1337236
DR. STH | DATE:
CK. LMH | REVISED:

DRAWING NO. 16936

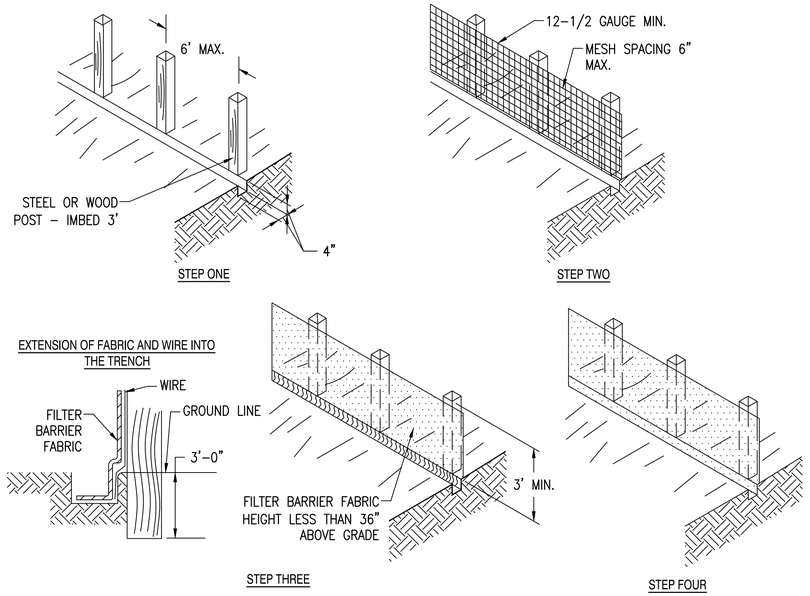

A SEDIMENT FENCE

NTS

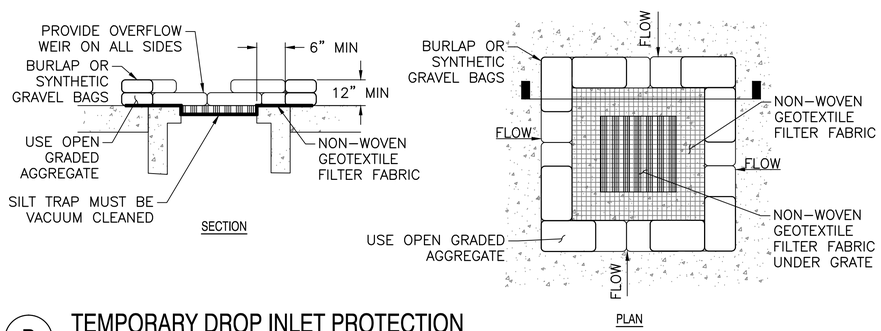

B TEMPORARY DROP INLET PROTECTION

NTS

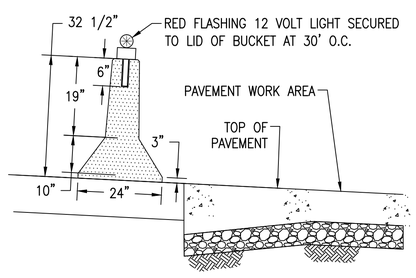

C DEBRIS BARRIER

NTS

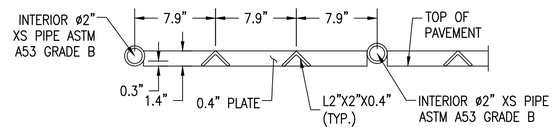

D FOD GRATE SECTION

NTS

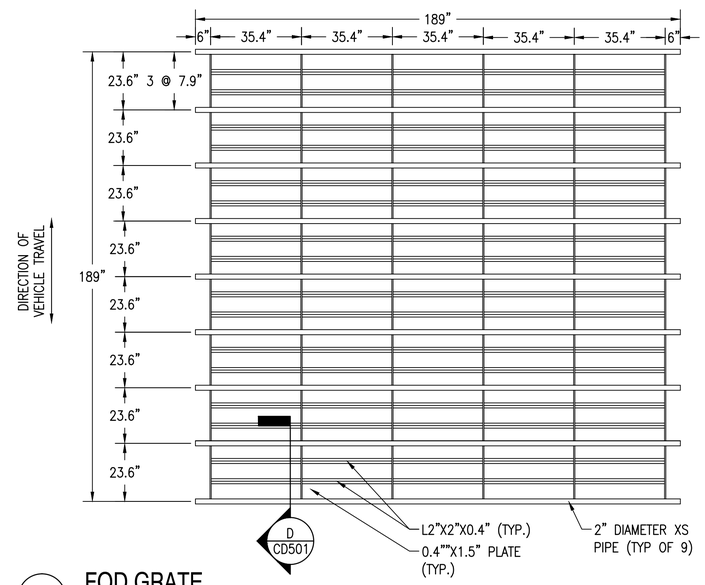

E FOD GRATE

NTS

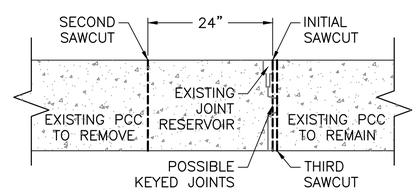

F PARALLEL SAWED JOINT

NTS

SEDIMENT FENCE NOTES

1. PROVIDE FENCE PARALLEL TO PAVEMENT EDGE.
2. PRE–MADE SILT FENCE MEETING FABRIC REQUIREMENTS AND DIMENSIONS SHOWN MAY BE SUBMITTED FOR C.O. APPROVAL.

STEP ONE: SET POSTS AND EXCAVATE A 4 INCH X 4 INCH TRENCH UPSLOPE ALONG THE LINE OF POSTS.

STEP TWO: STAPLE WIRE FENCING TO THE POSTS.

STEP THREE: ATTACH THE FILTER BARRIER FABRIC TO THE WIRE FENCE AND EXTEND IT INTO THE TRENCH.

STEP FOUR: BACKFILL AND COMPACT THE EXCAVATED SOIL.

PARALLEL SAWED JOINT NOTES

1. PRIOR TO INITIAL SAWCUT, CONTRACTOR MUST CONFIRM LIMITS OF PAVEMENT REMOVAL WITH CONTRACT OFFICER. UPON COMPLETION OF PAVEMENT REMOVAL THE CONTRACTOR AND CONTRACT OFFICER MUST INSPECT EDGE OF PAVEMENT TO REMAIN.
2. INITIAL SAWCUT MUST BE ALONG EDGE OF JOINT SEALANT RESERVOIR TO REMAIN.
3. SECOND SAWCUT MUST BE PARALLEL TO AND OFFSET 24 INCHES FROM THE INITIAL SAWCUT.
4. A THIRD SAWCUT MAY BE REQUIRED IN THE EVENT A KEYED JOINT STILL REMAINS.
5. ALL SAWCUTS MUST BE PLUM, STRAIGHT, AND FULL DEPTH OF PAVEMENT.

FOD GRATE NOTE

1. AS PART OF THE CONTRACTOR'S VEHICLE FOD CONTROL, THE CONTRACTOR MUST POSITION ONE FOD GRATE AT EACH ACCESS POINT ON TO THE FLIGHT LINE AND BASE ROAD SYSTEMS. THE CONTRACTOR AND ALL SUBCONTRACTORS MUST DRIVE VEHICLES OVER THE FOD GRATE IMMEDIATELY PRIOR TO ENTERING THE BASE ROAD SYSTEM TO DISLODGE STONES, ROCKS, AND OTHER POTENTIAL FOD FROM THE VEHICLES.
2. WHERE SEDIMENT IS TRANSPORTED ONTO PAVEMENTS, THE ROAD MUST BE CLEANED THOROUGHLY AT THE END OF EACH DAY. SEDIMENT MUST BE REMOVED FROM THE PAVEMENT BY SHOVELING OR SWEEPING AND TRANSPORTED TO A SEDIMENT CONTROL DISPOSAL AREA.

CD501

NATIONAL AERONAUTICS AND SPACE ADMINISTRATION
GODDARD SPACE FLIGHT CENTER
WALLOPS FLIGHT FACILITY
WALLOPS ISLAND, VIRGINIA 23337

DATE	LET.	REVISIONS	CK.	AP.

PROJECT ENGINEER — DATE :
SUBMITTED BY — DATE : 5-5-2014 — PROJECT MANAGER
NASA SAFETY — DATE 5-5-2014
FIRE PROTECTION — DATE : 5-5-2014
CONSTRUCTION MANAGEMENT — DATE : 5-5-2014
O & M — DATE : 5-5-2014
ENGINEERING APPROVAL — DATE 5-5-2014 — ENGINEERING GROUP LEADER
BRANCH APPROVAL — DATE 5-5-2014 — BRANCH HEAD

GRAPHIC SCALE: NOT TO SCALE
AUTOCAD – RELEASE 2010
FILE NAME: '1–1337236–CD5
SCALE: NOT TO SCALE
SHEET 9 OF 24

WALLOPS AIRFIELD REPAIR PROJECT PHASE I
DEMOLITION DETAILS
PROJECT NUMBER: 1337236
DR. STH — DATE:
CK. LMH — REVISED:
DRAWING NO. 16937

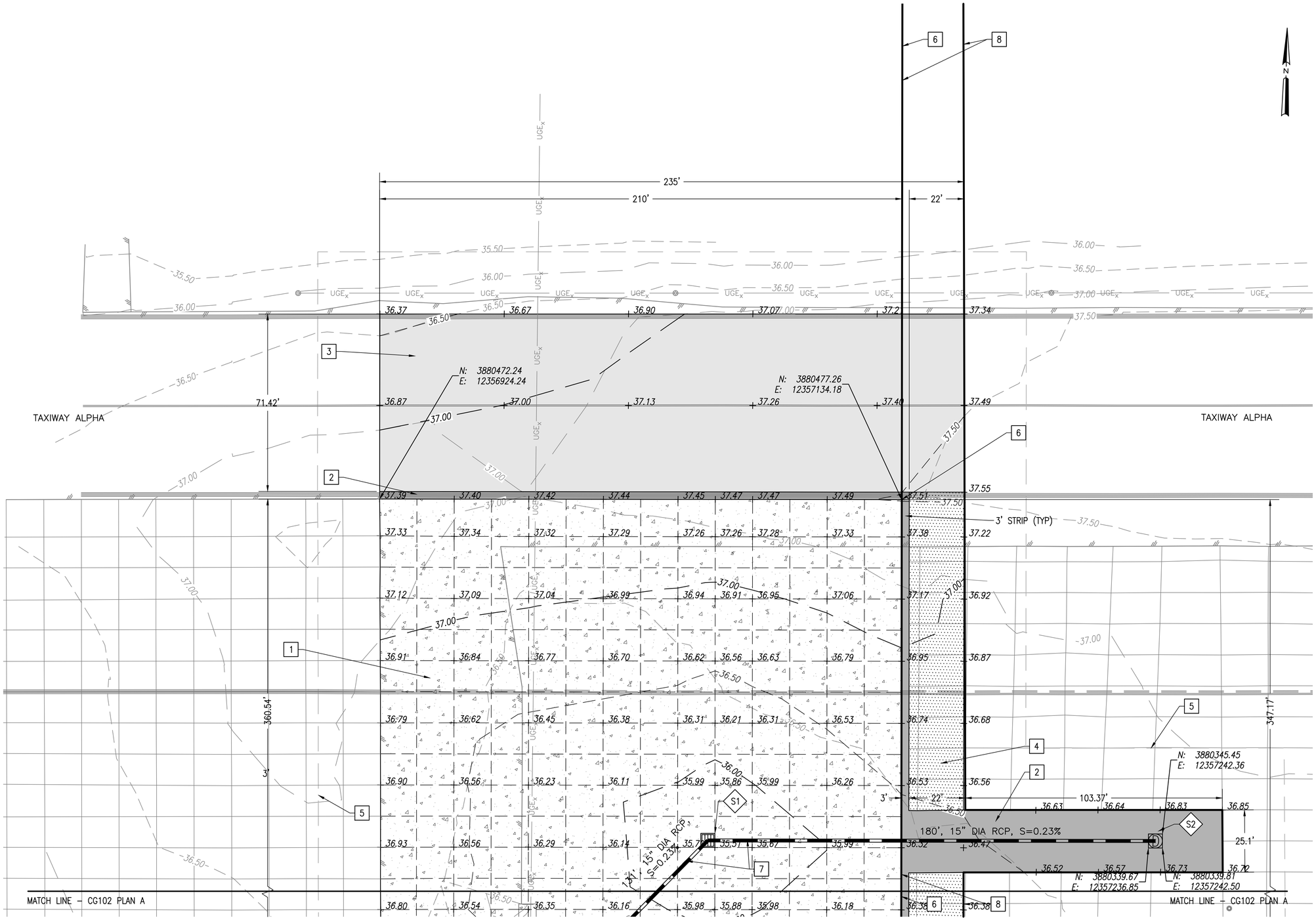

A GRADING PLAN (1 OF 2)

1" = 20'

SHEET NOTES

1. EXISTING CONCRETE HATCH NOT SHOWN FOR CLARITY.

NEW WORK NOTES

1. PROVIDE 13 INCHES OF PCC OVER 6 INCHES OF AGGREGATE BASE TO MEET FINISHED GRADE. SEE DETAIL J ON SHEET CS501.
2. PROVIDE 4 INCHES OF AC OVER 13.5 INCHES OF AGGREGATE BASE TO MEET FINISHED GRADE. SEE DETAIL I ON SHEET CS501.
3. PROVIDE A VARIABLE THICKNESS AC OVERLAY (MINIMUM OF 2 INCHES) OVER MILLED AC SURFACE. FOR BASIS OF BID ASSUME AN AVERAGE AC OVERLAY THICKNESS OF 2¾ INCHES.
4. PROVIDE A VARIABLE THICKNESS AC OVERLAY (MINIMUM OF 2 INCHES) OVER GROUND PCC SURFACE.
5. LIMIT OF CONSTRUCTION.
6. MATCH LINE FOR OPTIONS 1, 2 AND 3.
7. PROVIDE NEW 15 INCH RCP.
8. BASE BID WORK BETWEEN LINES DENOTED MUST BE REMOVED FROM OPTION 1, 2 AND 3 BID PRICES.

S1 PROVIDE NEW STORM DRAINAGE STRUCTURE. SEE STORM STRUCTURE SCHEDULE ON SHEET C–001.

S2 PROVIDE NEW STORM DRAINAGE STRUCTURE. SEE STORM STRUCTURE SCHEDULE ON SHEET C–001.

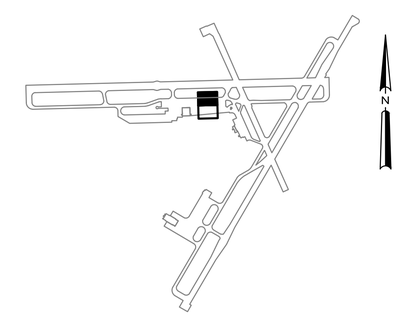

B KEY PLAN

NTS

CG101

NATIONAL AERONAUTICS AND SPACE ADMINISTRATION
GODDARD SPACE FLIGHT CENTER
WALLOPS FLIGHT FACILITY
WALLOPS ISLAND, VIRGINIA 23337

DATE	LET.	REVISIONS	CK.	AP.

PROJECT ENGINEER — DATE :
SUBMITTED BY — DATE : 5-5-2014
PROJECT MANAGER

NASA SAFETY — DATE 5-5-2014
FIRE PROTECTION — DATE : 5-5-2014

CONSTRUCTION MANAGEMENT — DATE : 5-5-2014
O & M — DATE : 5-5-2014

ENGINEERING APPROVAL — DATE 5-5-2014
ENGINEERING GROUP LEADER
BRANCH APPROVAL — DATE 5-5-2014
BRANCH HEAD

GRAPHIC SCALE 1"=20' 0' 20' 40'

AUTOCAD – RELEASE 2010
FILE NAME: '1–1337236–CG1

SCALE 1" = 20'
SHEET 10 OF 24

WALLOPS AIRFIELD REPAIR PROJECT PHASE I

GRADING PLAN

PROJECT NUMBER: 1337236
DR. STH | DATE:
CK. LMH | REVISED:

DRAWING NO. 16938

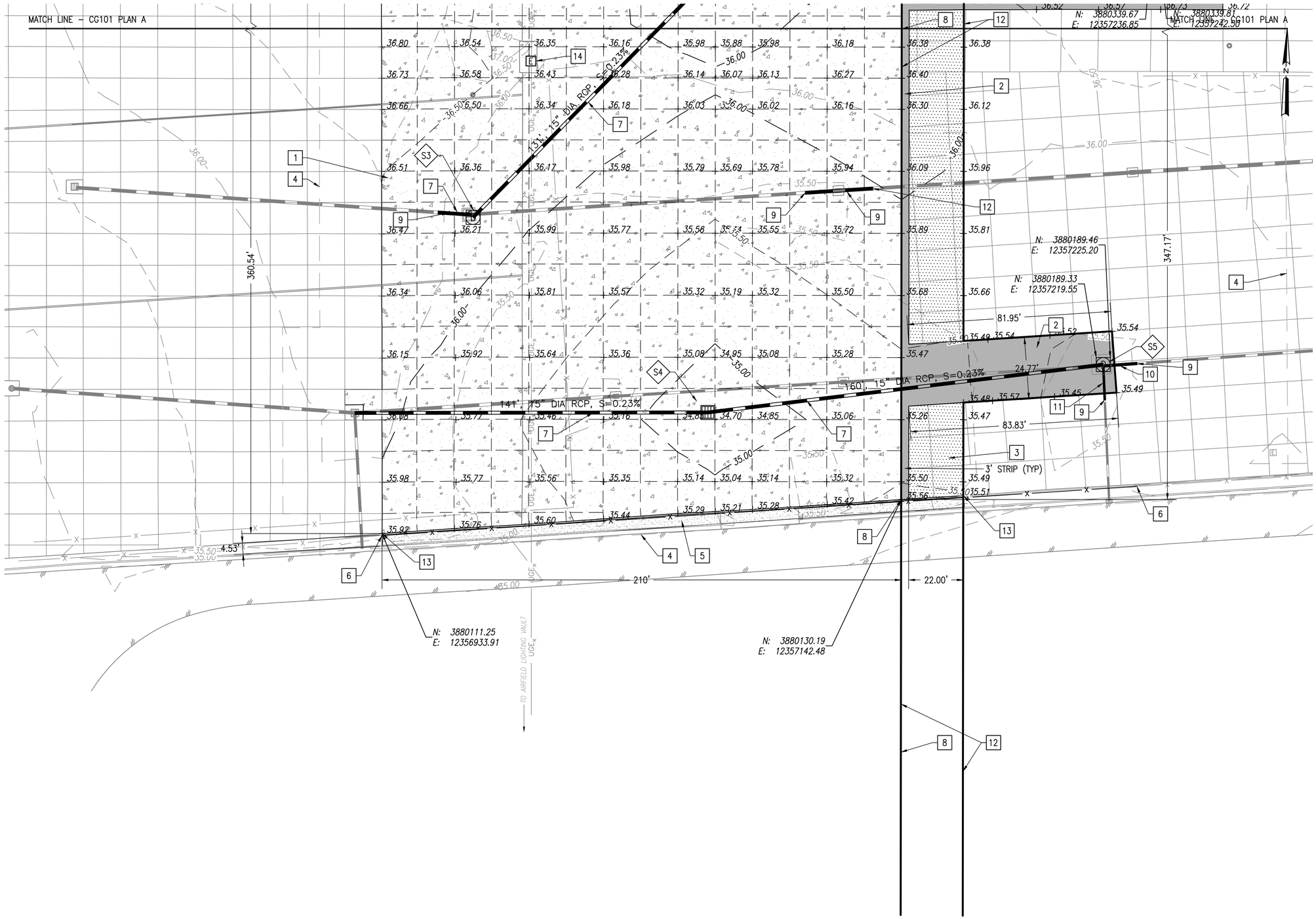

SHEET NOTES

1. EXISTING CONCRETE HATCH NOT SHOWN FOR CLARITY.

NEW WORK NOTES

1. PROVIDE 13 INCHES OF PCC OVER 6 INCHES OF AGGREGATE BASE TO MEET FINISHED GRADE. SEE DETAIL J ON SHEET CS501.
2. PROVIDE 4 INCHES OF AC OVER 13.5 INCHES OF AGGREGATE BASE TO MEET FINISHED GRADE. SEE DETAIL I ON SHEET CS501.
3. PROVIDE A VARIABLE THICKNESS AC OVERLAY, MINIMUM OF 2 INCHES, OVER GROUND PCC SURFACE.
4. LIMIT OF CONSTRUCTION.
5. REGRADE AND SEED TO MEET FINISH GRADE.
6. PROVIDE NEW 7 FOOT CHAIN LINK FENCE. TIE INTO EXISTING. SEE DETAIL D, SHEET CS502.
7. PROVIDE NEW 15 INCH RCP.
8. MATCH LINE FOR OPTIONS 1, 2 AND 3.
9. CONNECT NEW PIPE TO EXISTING PIPE AT NEAREST JOINT.
10. PROVIDE NEW 12 INCH RCP.
11. PROVIDE NEW 9 INCH DUCTILE IRON PIPE.
12. BASE BID WORK BETWEEN LINES DENOTED MUST BE REMOVED FROM OPTION 1, 2 AND 3 BID PRICES.
13. PROVIDE 235 FEET OF CG–3 CURB. SEE DETAIL K ON SHEET CS501.
14. RECONSTRUCT TOP OF ELECTRICAL HANDHOLE. SEE DETAIL F ON SHEET CS502. ENSURE PROPER LOCKOUT/TAGOUT MEASURES ARE IN PLACE. PROTECT INTERIOR ELECTRIC COMPONENTS BY COVERING WITH 3' X 3' X ¾" PLYWOOD TABLE.

S3 PROVIDE NEW STORM DRAINAGE STRUCTURE. SEE STORM STRUCTURE SCHEDULE ON SHEET C–001.

S4 PROVIDE NEW STORM DRAINAGE STRUCTURE. SEE STORM STRUCTURE SCHEDULE ON SHEET C–001.

S5 PROVIDE NEW STORM DRAINAGE STRUCTURE. SEE STORM STRUCTURE SCHEDULE ON SHEET C–001.

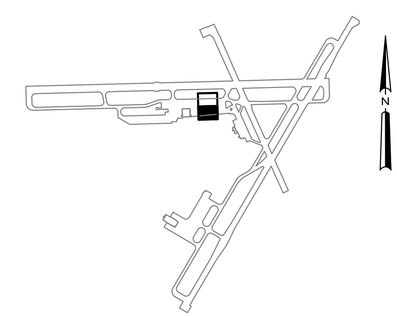

A GRADING PLAN (2 OF 2)
1" = 20'

B KEY PLAN
NTS

CG102

NATIONAL AERONAUTICS AND SPACE ADMINISTRATION
GODDARD SPACE FLIGHT CENTER
WALLOPS FLIGHT FACILITY
WALLOPS ISLAND, VIRGINIA 23337

DATE	LET.	REVISIONS	CK.	AP.

PROJECT ENGINEER — DATE :
SUBMITTED BY — DATE : 5-5-2014
PROJECT MANAGER
NASA SAFETY — DATE 5-5-2014
FIRE PROTECTION — DATE : 5-5-2014
CONSTRUCTION MANAGEMENT — DATE : 5-5-2014
O & M — DATE : 5-5-2014
ENGINEERING APPROVAL — DATE 5-5-2014
ENGINEERING GROUP LEADER
BRANCH APPROVAL — DATE 5-5-2014
BRANCH HEAD

GRAPHIC SCALE 1"=20' 0' 20' 40'
AUTOCAD – RELEASE 2010
FILE NAME: '1-1337236-CG1
SCALE 1" = 20'
SHEET 11 OF 24

WALLOPS AIRFIELD REPAIR PROJECT
PHASE I
GRADING PLAN

PROJECT NUMBER: 1337236
DR. STH
CK. LMH
DATE:
REVISED:
DRAWING NO. 16939

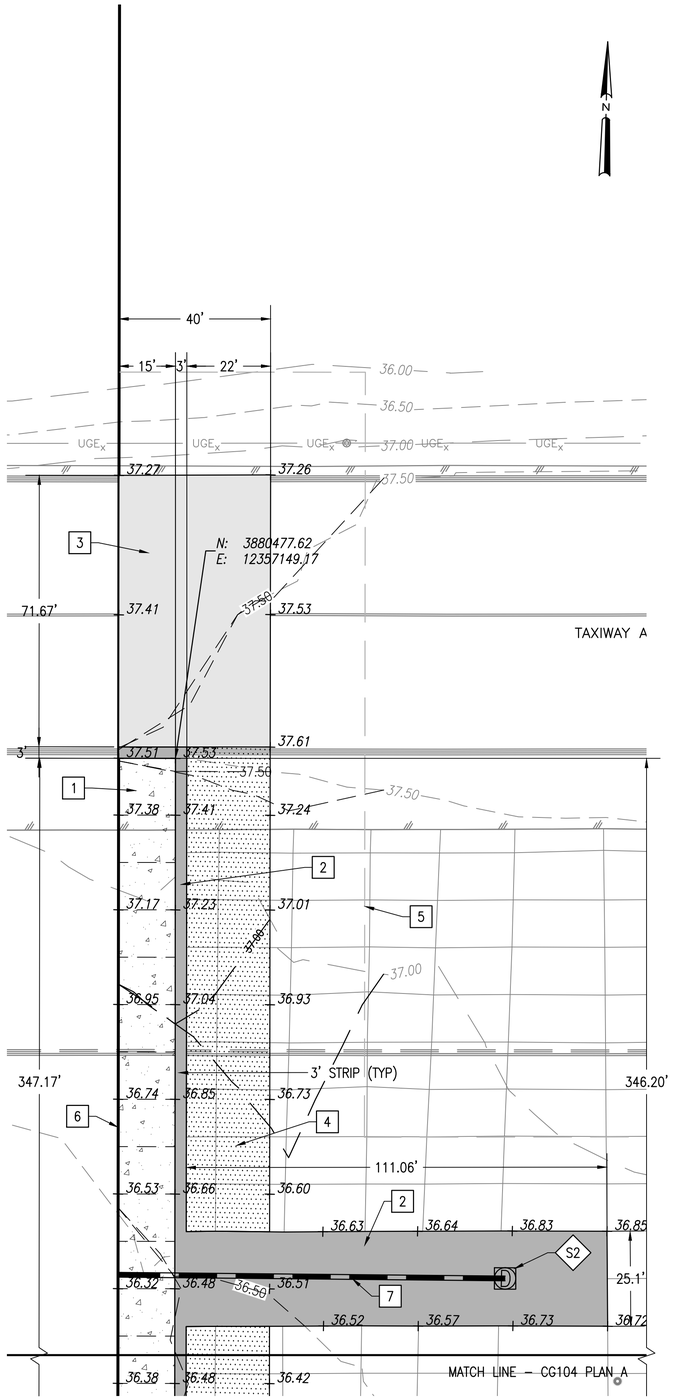

A GRADING PLAN - OPTION 1 (1 OF 2)

1" = 20'

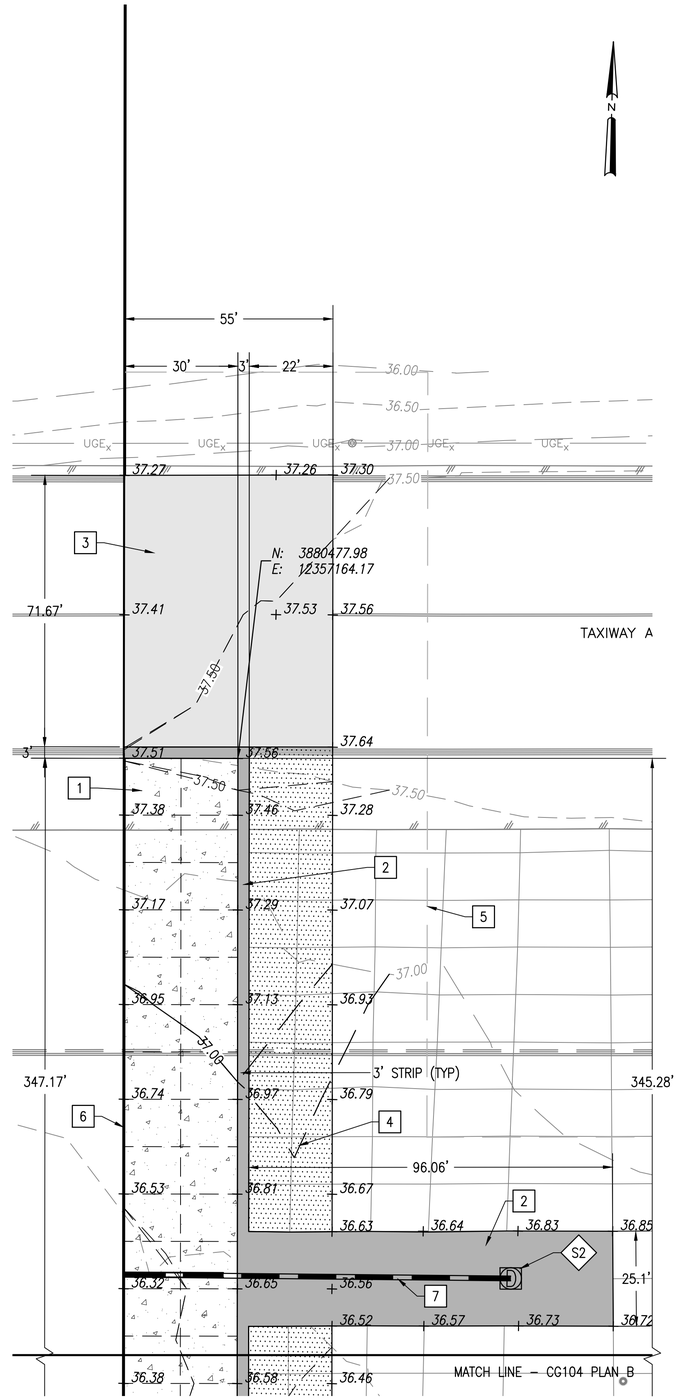

B GRADING PLAN - OPTION 2 (1 OF 2)

1" = 20'

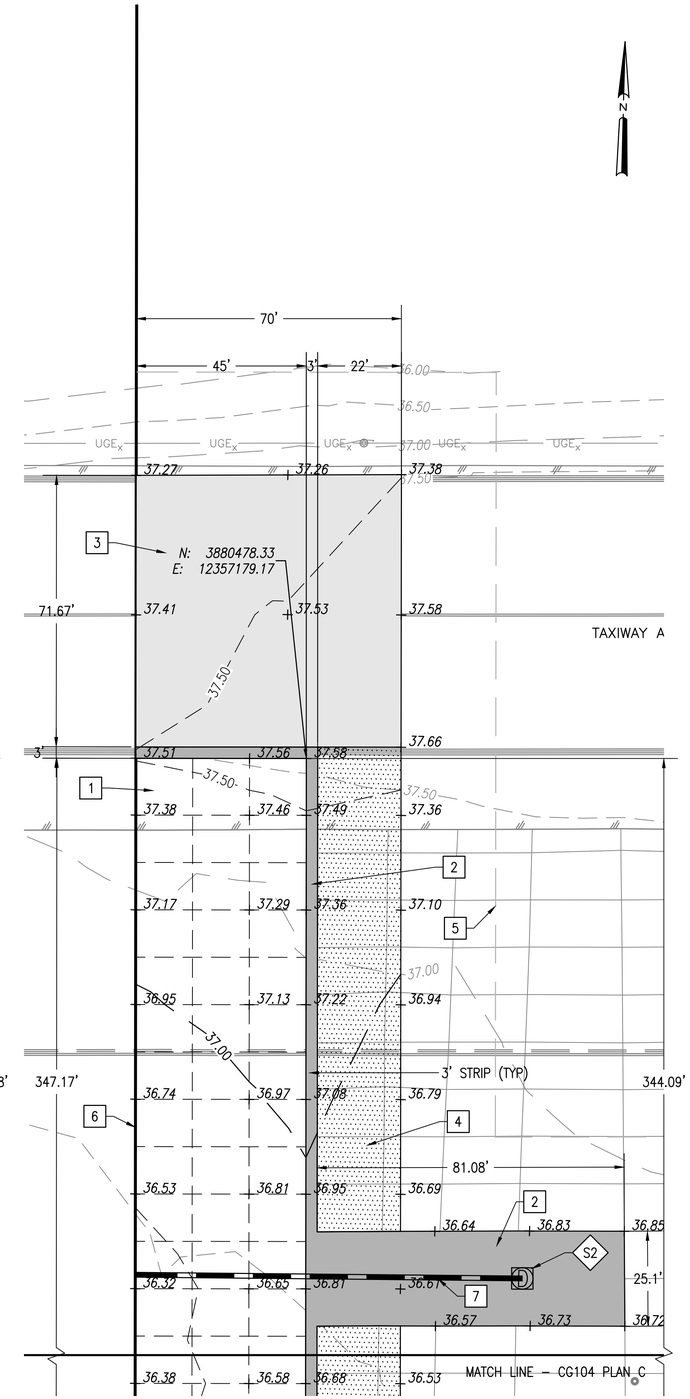

C GRADING PLAN - OPTION 3 (1 OF 2)

1" = 20'

SHEET NOTES

1. EXISTING CONCRETE HATCH NOT SHOWN FOR CLARITY.

NEW WORK NOTES

1. PROVIDE 13 INCHES OF PCC OVER 6 INCHES OF AGGREGATE BASE TO MEET FINISHED GRADE. SEE DETAIL J ON SHEET CS501.
2. PROVIDE 4 INCHES OF AC OVER 13.5 INCHES OF AGGREGATE BASE TO MEET FINISHED GRADE. SEE DETAIL I ON SHEET CS501.
3. PROVIDE A VARIABLE THICKNESS AC OVERLAY (MINIMUM OF 2 INCHES) OVER MILLED AC SURFACE. FOR BASIS OF BID ASSUME AN AVERAGE AC OVERLAY THICKNESS OF 2 INCHES.
4. PROVIDE A VARIABLE THICKNESS AC OVERLAY (MINIMUM OF 2 INCHES) OVER GROUND PCC SURFACE.
5. LIMIT OF CONSTRUCTION.
6. MATCH LINE FOR OPTIONS 1, 2 AND 3.
7. PROVIDE NEW 180' LONG, 15" DIA RCP, S=0.23%.

S2 PROVIDE NEW STORM DRAINAGE STRUCTURE. SEE STORM STRUCTURE SCHEDULE ON SHEET C-001.

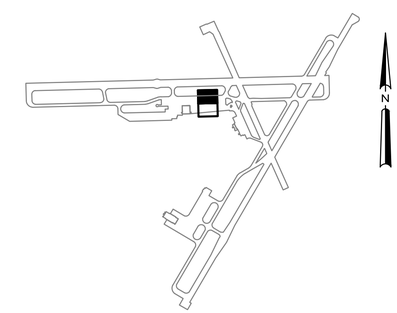

D KEY PLAN

NTS

CG103

NATIONAL AERONAUTICS AND SPACE ADMINISTRATION
GODDARD SPACE FLIGHT CENTER
WALLOPS FLIGHT FACILITY
WALLOPS ISLAND, VIRGINIA 23337

DATE	LET.	REVISIONS	CK.	AP.

PROJECT ENGINEER — DATE :
SUBMITTED BY — DATE : 5-5-2014
PROJECT MANAGER
NASA SAFETY — DATE 5-5-2014
FIRE PROTECTION — DATE : 5-5-2014
CONSTRUCTION MANAGEMENT — DATE : 5-5-2014
O & M — DATE : 5-5-2014
ENGINEERING APPROVAL — DATE 5-5-2014
ENGINEERING GROUP LEADER
BRANCH APPROVAL — DATE 5-5-2014
BRANCH HEAD

GRAPHIC SCALE 1"=20' 0' 20' 40'
AUTOCAD – RELEASE 2010
FILE NAME: '1-1337236-CG1
SCALE 1" = 20'
SHEET 12 OF 24

WALLOPS AIRFIELD REPAIR PROJECT PHASE I
GRADING PLAN
PROJECT NUMBER: 1337236
DR. STH DATE:
CK. LMH REVISED:
DRAWING NO. 16940

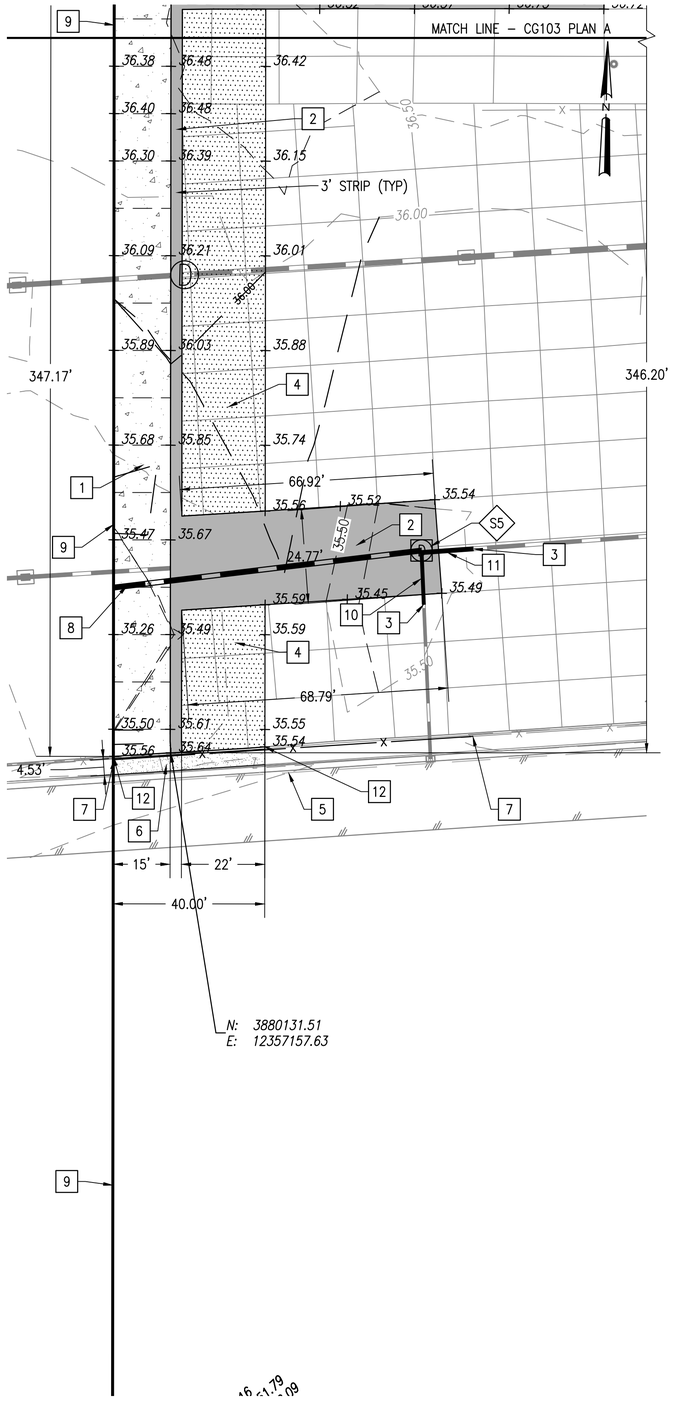

A GRADING PLAN - OPTION 1 (2 OF 2)
1" = 20'

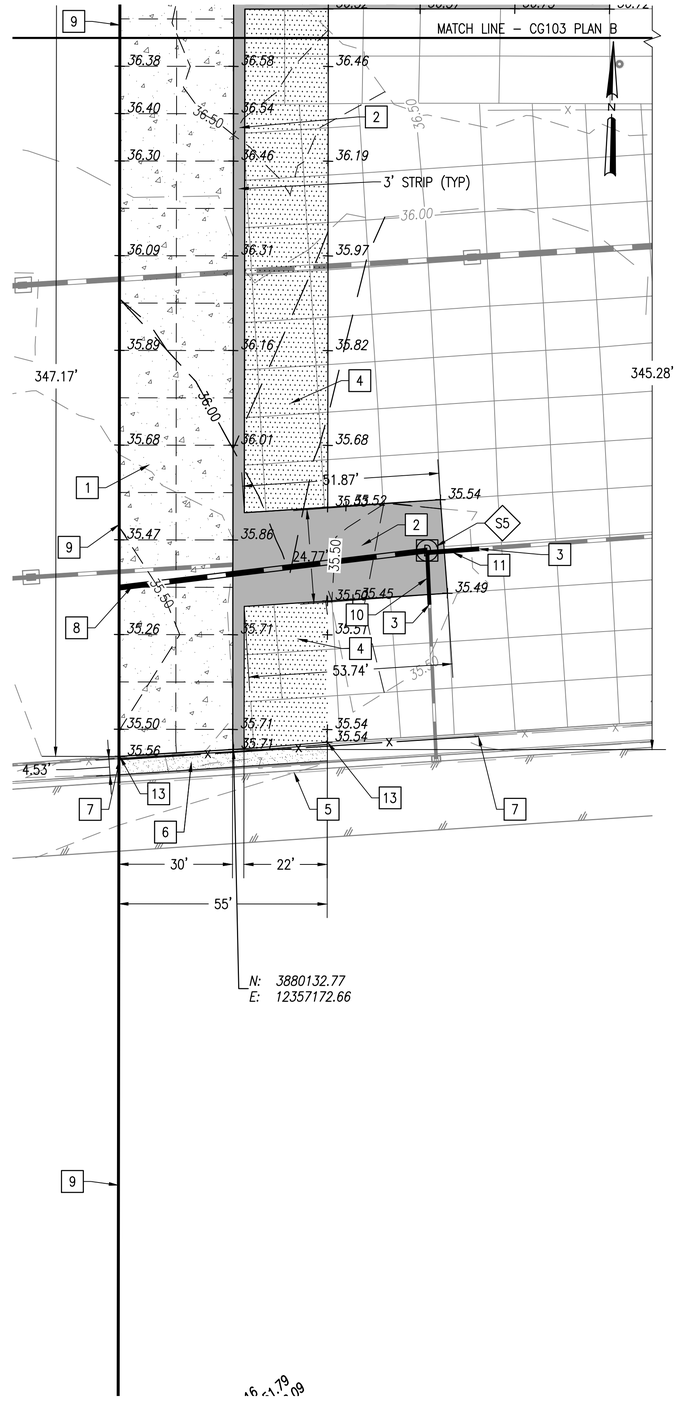

B GRADING PLAN - OPTION 2 (2 OF 2)
1" = 20'

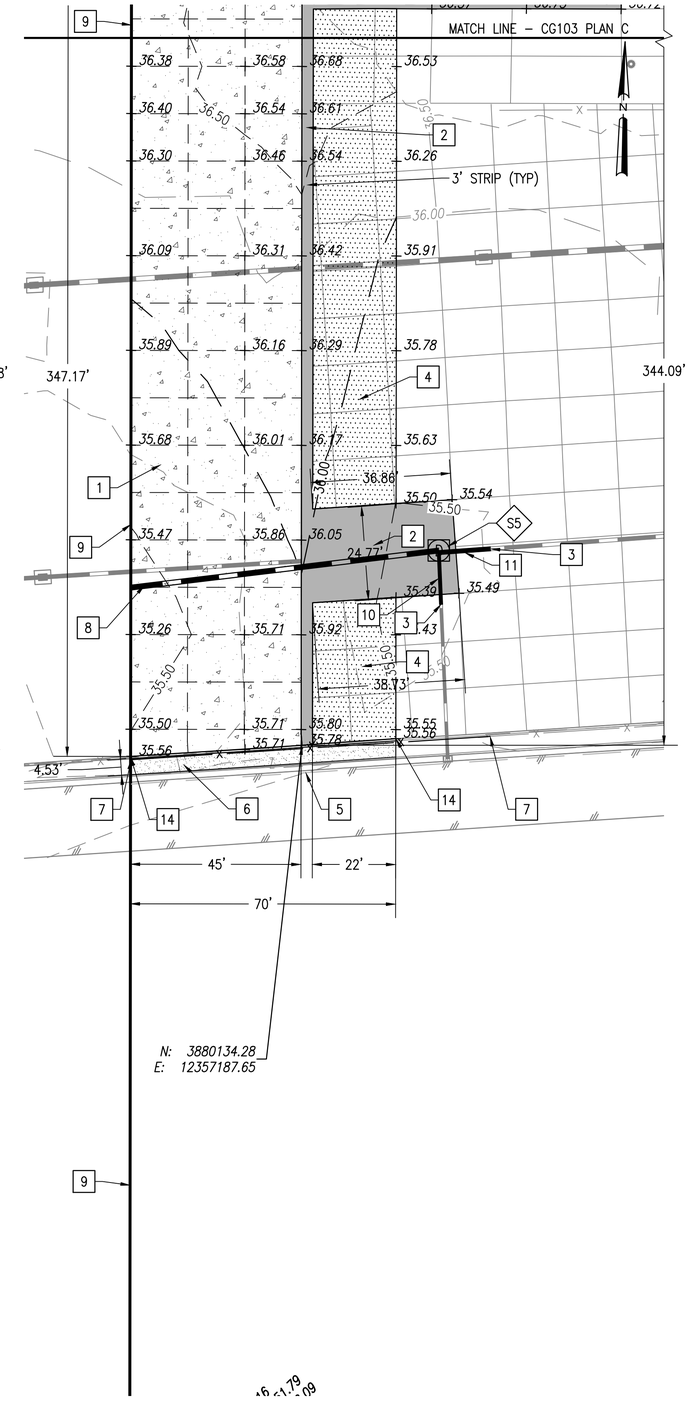

C GRADING PLAN - OPTION 3 (2 OF 2)
1" = 20'

SHEET NOTES

1. EXISTING CONCRETE HATCH NOT SHOWN FOR CLARITY.

NEW WORK NOTES

1. PROVIDE 13 INCHES OF PCC OVER 6 INCHES OF AGGREGATE BASE TO MEET FINISHED GRADE. SEE DETAIL J ON SHEET CS501.
2. PROVIDE 4 INCHES OF AC OVER 13.5 INCHES OF AGGREGATE BASE TO MEET FINISHED GRADE. SEE DETAIL I ON SHEET CS501/
3. CONNECT NEW PIPE TO EXISTING PIPE.
4. PROVIDE A VARIABLE THICKNESS AC OVERLAY, MINIMUM OF 2 INCHES, OVER GROUND PCC SURFACE.
5. LIMIT OF CONSTRUCTION.
6. REGRADE AND SEED TO MEET FINISH GRADE.
7. PROVIDE NEW 7 FOOT CHAIN LINK FENCE. TIE INTO EXISTING. SEE DETAIL C, SHEET CS502.
8. PROVIDE NEW 160' LONG, 15" DIA RCP, S=0.23%.
9. MATCH LINE FOR OPTIONS 1, 2 AND 3.
10. PROVIDE NEW 9 INCH DUCTILE IRON PIPE.
11. PROVIDE NEW 12 INCH RCP.
12. PROVIDE 40 FEET OF CG-3 CURB. SEE DETAIL K ON SHEET CS501.
13. PROVIDE 55 FEET OF CG-3 CURB. SEE DETAIL K ON SHEET CS501.
14. PROVIDE 70 FEET OF CG-3 CURB. SEE DETAIL K ON SHEET CS501.

S5 PROVIDE NEW STORM DRAINAGE STRUCTURE. SEE STORM STRUCTURE SCHEDULE ON SHEET C-001.

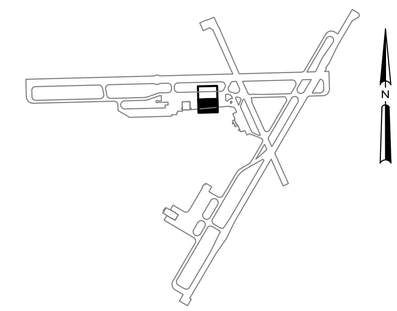

D KEY PLAN
NTS

CG104

NATIONAL AERONAUTICS AND SPACE ADMINISTRATION
GODDARD SPACE FLIGHT CENTER
WALLOPS FLIGHT FACILITY
WALLOPS ISLAND, VIRGINIA 23337

DATE	LET.	REVISIONS	CK.	AP.

PROJECT ENGINEER — DATE :
SUBMITTED BY — DATE : 5-5-2014
PROJECT MANAGER
NASA SAFETY — DATE 5-5-2014
FIRE PROTECTION — DATE : 5-5-2014
CONSTRUCTION MANAGEMENT — DATE : 5-5-2014
O & M — DATE : 5-5-2014
ENGINEERING APPROVAL — DATE 5-5-2014
ENGINEERING GROUP LEADER
BRANCH APPROVAL — DATE 5-5-2014
BRANCH HEAD

GRAPHIC SCALE 1"=20' 0' 20' 40'
AUTOCAD – RELEASE 2010
FILE NAME: '1-1337236-CG1
SCALE 1" = 20'
SHEET 13 OF 24

WALLOPS AIRFIELD REPAIR PROJECT
PHASE I
GRADING PLAN

PROJECT NUMBER: 1337236
DR. STH
CK. LMH
DATE:
REVISED:
DRAWING NO. 16941

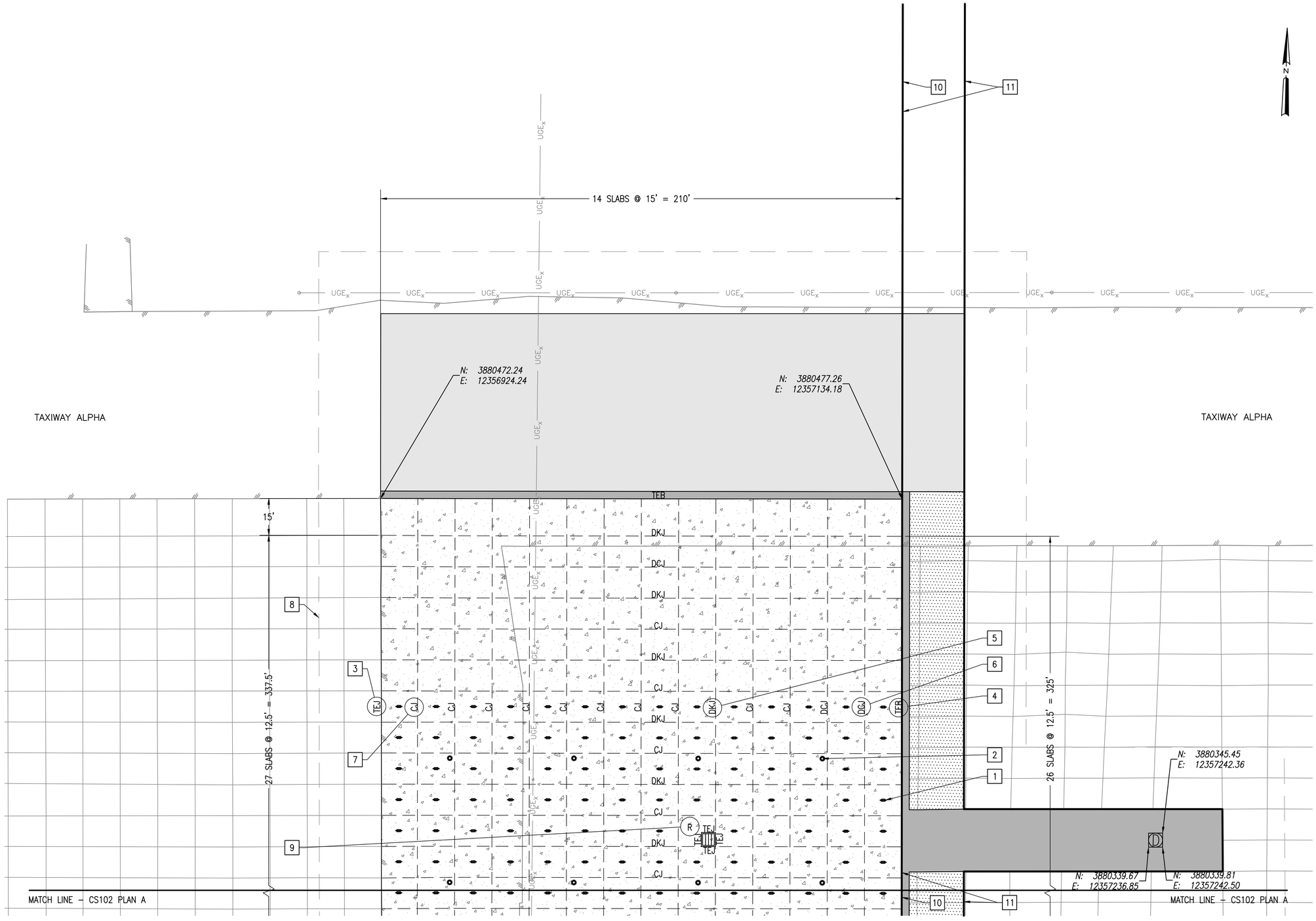

A JOINT LAYOUT PLAN (1 OF 2)

1" = 20'

SHEET NOTES

1. EXISTING CONTOURS AND EXISTING CONCRETE HATCH NOT SHOWN FOR CLARITY.

JOINT LAYOUT NOTES

1. PROVIDE 300 MOORING EYES. SEE DETAIL G, SHEET CS501.
2. PROVIDE 20 STATIC GROUND RECEPTACLES ON A 50 FOOT GRID. SEE DETAIL H, SHEET CS501.
3. PROVIDE THICKENED EDGE JOINT, DENOTED TEJ. SEE DETAIL A, SHEET CS501.
4. PROVIDE THICKENED EDGE BUTT JOINT, DENOTED TEB. SEE DETAIL D, SHEET CS501.
5. PROVIDE DOWELED CONSTRUCTION JOINT, DENOTED DKJ. SEE DETAIL B, SHEET CS501.
6. PROVIDE DOWELED CONTRACTION JOINT, DENOTED DCJ. SEE DETAIL C, SHEET CS501.
7. PROVIDE CONTRACTION JOINT, DENOTED CJ. SEE DETAIL C, SHEET CS501.
8. LIMIT OF CONSTRUCTION.
9. PROVIDE SLAB REINFORCEMENT, DENOTED R. SEE DETAIL A, B ,C OR D, SHEET CS501.
10. MATCH LINE FOR OPTIONS 1, 2 AND 3.
11. BASE BID WORK BETWEEN LINES DENOTED MUST BE REMOVED FROM OPTION 1, 2 AND 3 BID PRICES.

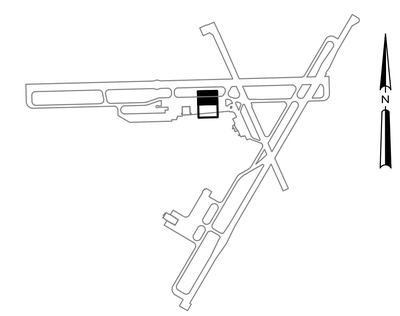

B KEY PLAN

NTS

CS101

NATIONAL AERONAUTICS AND SPACE ADMINISTRATION
GODDARD SPACE FLIGHT CENTER
WALLOPS FLIGHT FACILITY
WALLOPS ISLAND, VIRGINIA 23337

DATE	LET.	REVISIONS	CK.	AP.

PROJECT ENGINEER — DATE :
SUBMITTED BY — DATE : 5-5-2014
PROJECT MANAGER
NASA SAFETY — DATE 5-5-2014
FIRE PROTECTION — DATE : 5-5-2014
CONSTRUCTION MANAGEMENT — DATE : 5-5-2014
O & M — DATE : 5-5-2014
ENGINEERING APPROVAL — DATE 5-5-2014
ENGINEERING GROUP LEADER
BRANCH APPROVAL — DATE 5-5-2014
BRANCH HEAD

GRAPHIC SCALE 1"=20' 0' 20' 40'

AUTOCAD – RELEASE 2010
FILE NAME: '1-1337236-CS1

SCALE 1" = 20'
SHEET 14 OF 24

WALLOPS AIRFIELD REPAIR PROJECT PHASE I

JOINT LAYOUT PLAN

PROJECT NUMBER: 1337236
DR. STH — DATE:
CK. LMH — REVISED:

DRAWING NO. 16942

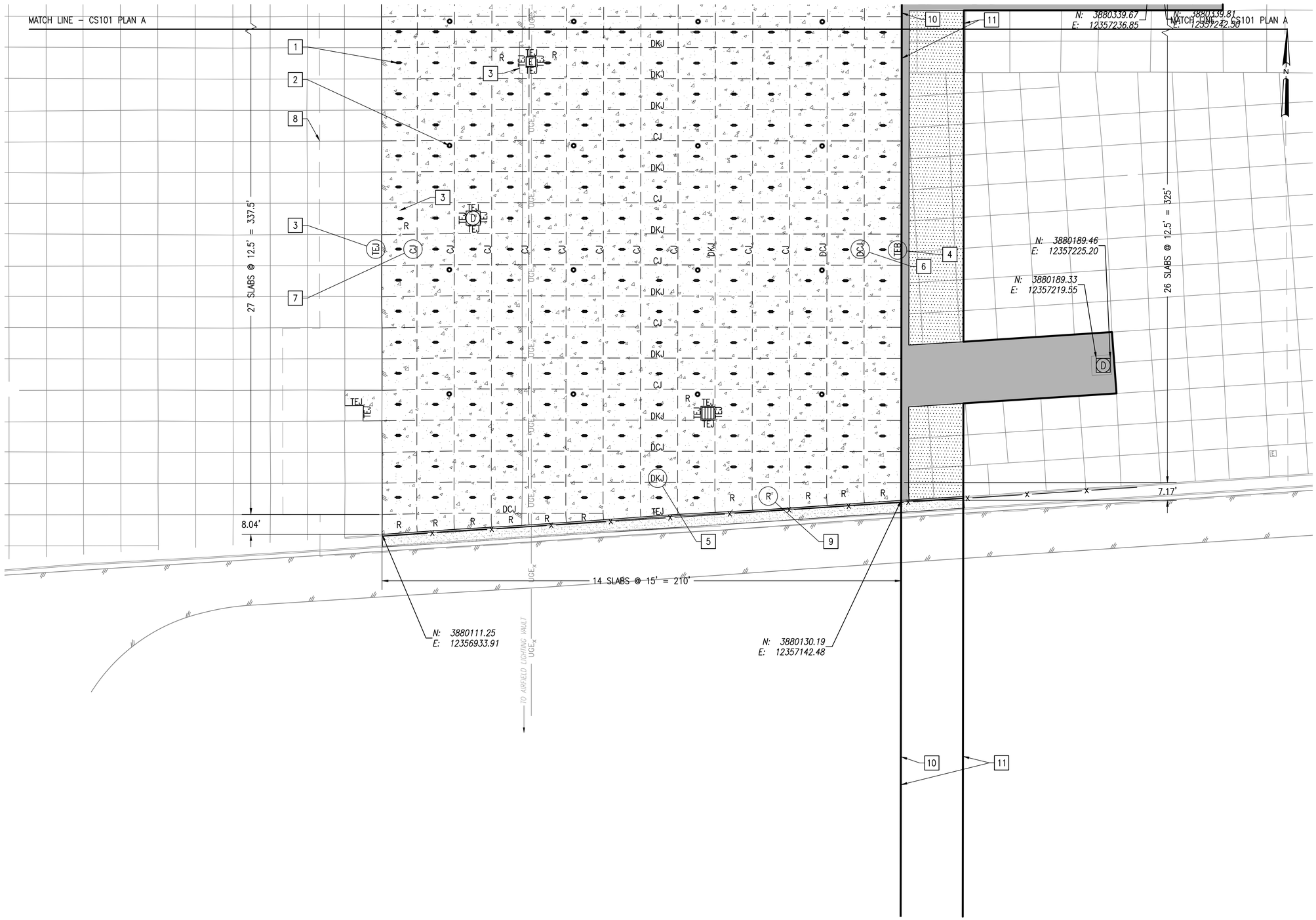

SHEET NOTES

1. EXISTING CONTOURS AND EXISTING CONCRETE HATCH NOT SHOWN FOR CLARITY.

JOINT LAYOUT NOTES

1. PROVIDE 300 MOORING EYES. SEE DETAIL G, SHEET CS501.
2. PROVIDE 20 STATIC GROUND RECEPTACLES ON A 50 FOOT GRID. SEE DETAIL H, SHEET CS501.
3. PROVIDE THICKENED EDGE JOINT, DENOTED TEJ. SEE DETAIL A, SHEET CS501.
4. PROVIDE THICKENED EDGE BUTT JOINT, DENOTED TEB. SEE DETAIL D, SHEET CS501.
5. PROVIDE DOWELED CONSTRUCTION JOINT, DENOTED DKJ. SEE DETAIL B, SHEET CS501.
6. PROVIDE DOWELED CONTRACTION JOINT, DENOTED DCJ. SEE DETAIL C, SHEET CS501.
7. PROVIDE CONTRACTION JOINT, DENOTED CJ. SEE DETAIL C, SHEET CS501.
8. LIMIT OF CONSTRUCTION.
9. PROVIDE SLAB REINFORCEMENT, DENOTED R. SEE DETAIL A, B ,C OR D, SHEET CS501.
10. MATCH LINE FOR OPTIONS 1, 2 AND 3.
11. BASE BID WORK BETWEEN LINES DENOTED MUST BE REMOVED FROM OPTION 1, 2 AND 3 BID PRICES.

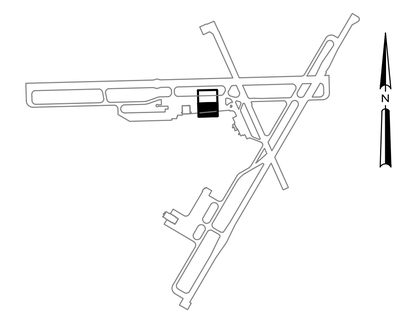

A JOINT LAYOUT PLAN (2 OF 2)
1" = 20'

B KEY PLAN
NTS

CS102

NATIONAL AERONAUTICS AND SPACE ADMINISTRATION
GODDARD SPACE FLIGHT CENTER
WALLOPS FLIGHT FACILITY
WALLOPS ISLAND, VIRGINIA 23337

DATE	LET.	REVISIONS	CK.	AP.

PROJECT ENGINEER — DATE :
SUBMITTED BY — DATE : 5-5-2014
PROJECT MANAGER
NASA SAFETY — DATE 5-5-2014
FIRE PROTECTION — DATE : 5-5-2014
CONSTRUCTION MANAGEMENT — DATE : 5-5-2014
O & M — DATE : 5-5-2014
ENGINEERING APPROVAL — DATE 5-5-2014
ENGINEERING GROUP LEADER
BRANCH APPROVAL — DATE 5-5-2014
BRANCH HEAD

GRAPHIC SCALE 1"=20' 0' 20' 40'
AUTOCAD – RELEASE 2010
FILE NAME: '1-1337236-CS1
SCALE 1" = 20'
SHEET 15 OF 24

WALLOPS AIRFIELD REPAIR PROJECT PHASE I
JOINT LAYOUT PLAN
PROJECT NUMBER: 1337236
DR. STH DATE:
CK. LMH REVISED:
DRAWING NO. 16943

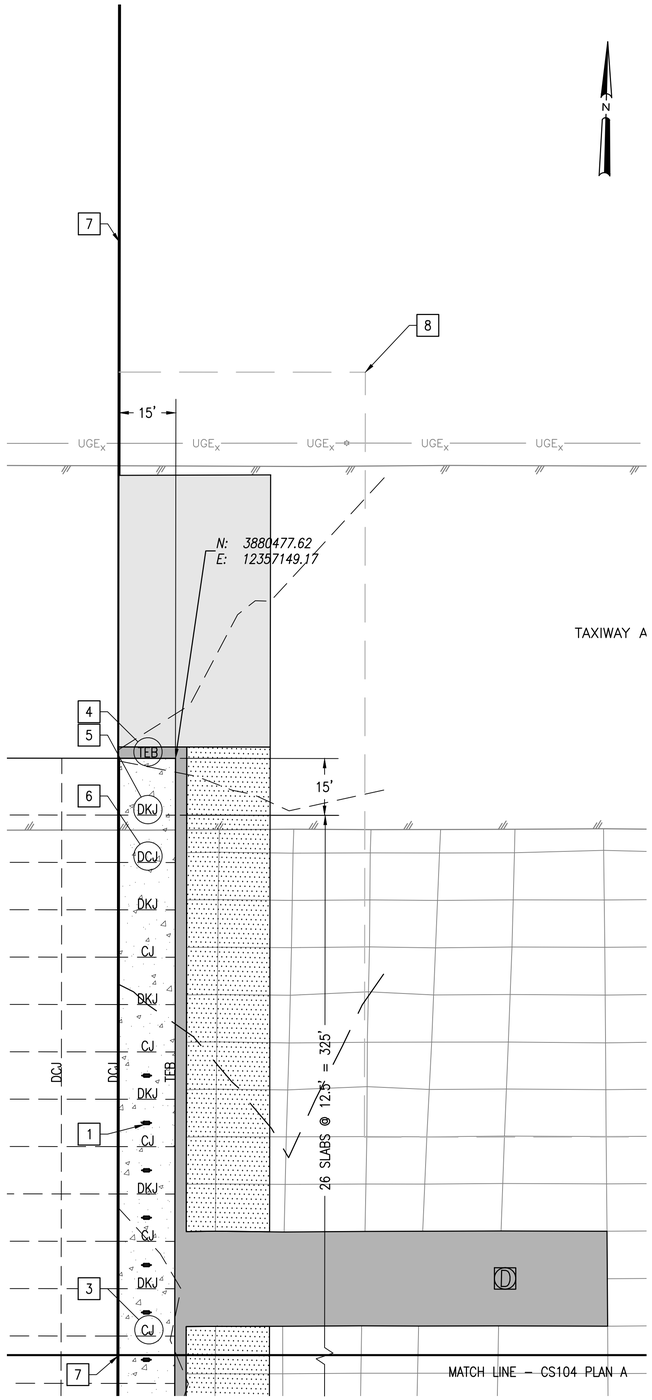

A JOINT LAYOUT PLAN - OPTION 1 (1 OF 2)
1" = 20'

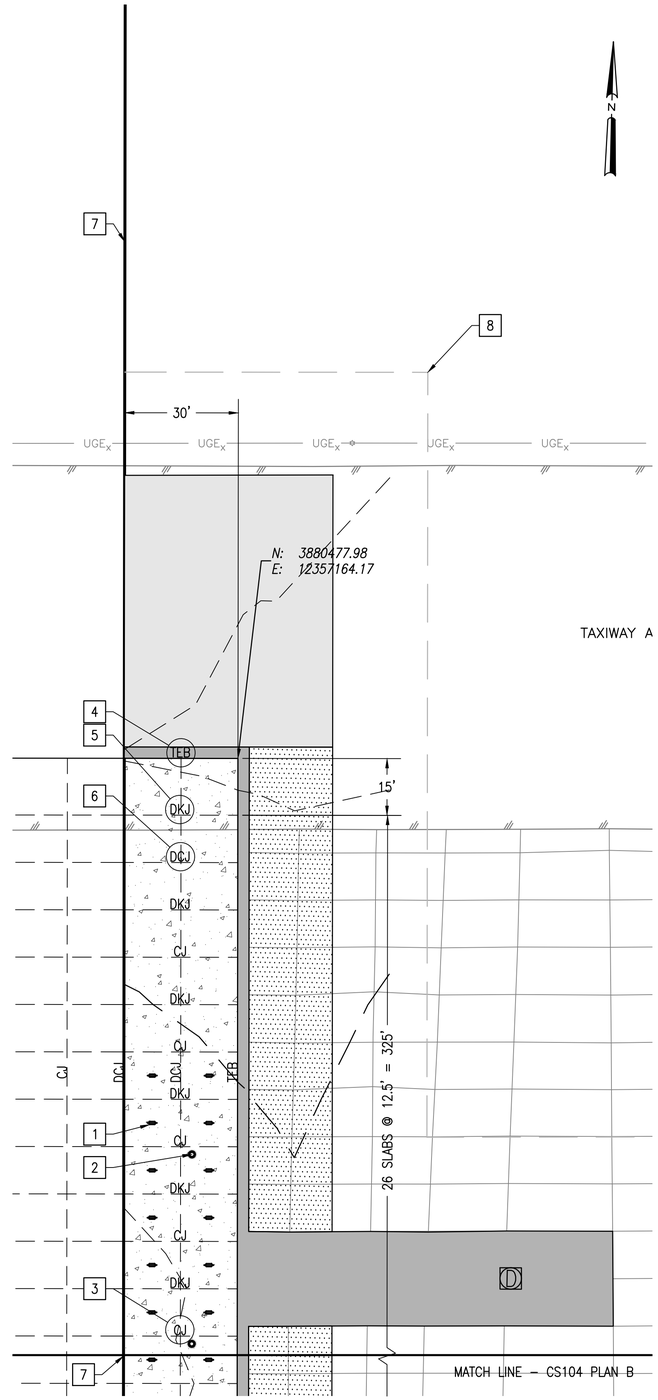

B JOINT LAYOUT PLAN - OPTION 2 (1 OF 2)
1" = 20'

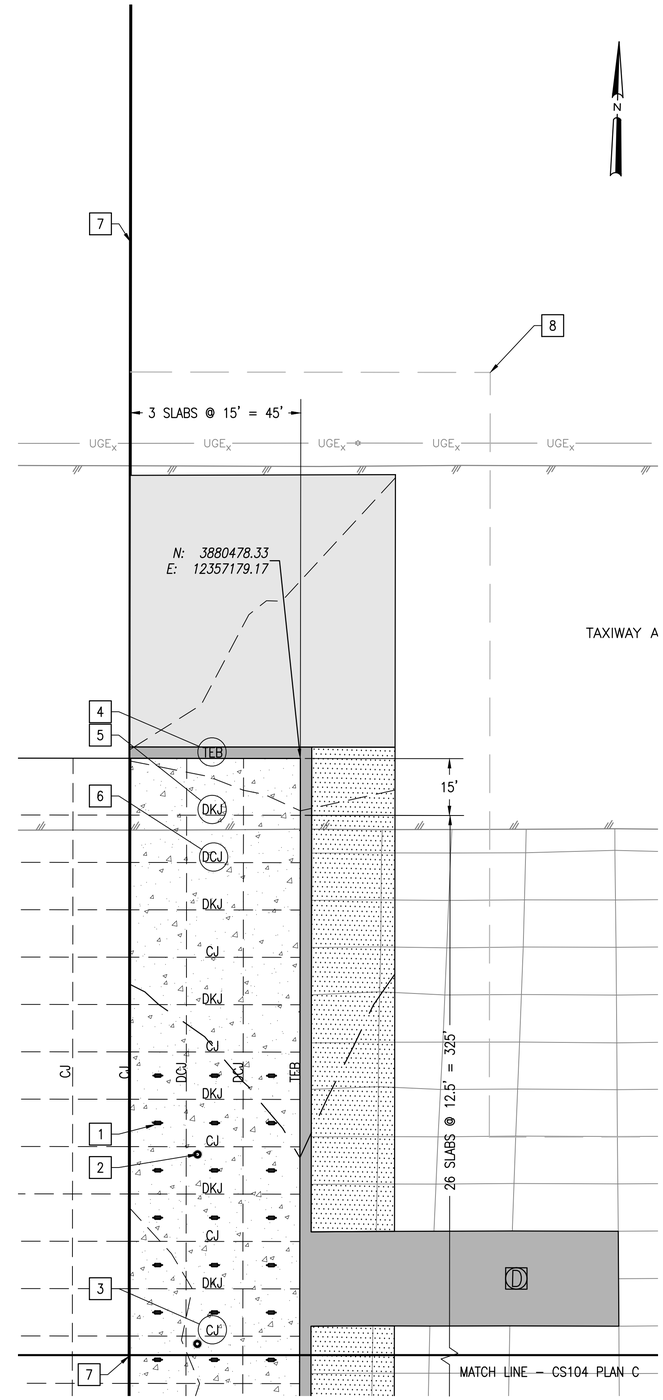

C JOINT LAYOUT PLAN - OPTION 3 (1 OF 2)
1" = 20'

SHEET NOTES

1. EXISTING CONTOURS AND EXISTING CONCRETE HATCH NOT SHOWN FOR CLARITY.

JOINT LAYOUT NOTES

1. PROVIDE MOORING EYES. 21 REQUIRED FOR OPTION 1, 42 REQUIRED FOR OPTION 2, AND 63 REQUIRED FOR OPTION 3. SEE DETAIL G, SHEET CS501,
2. PROVIDE 5 STATIC GROUND RECEPTACLES ON A 50 FOOT GRID. SEE DETAIL H, SHEET CS501.
3. PROVIDE CONTRACTION JOINT, DENOTED CJ. SEE DETAIL C, SHEET CS501.
4. PROVIDE THICKENED EDGE BUTT JOINT, DENOTED TEB. SEE DETAIL D, SHEET CS501.
5. PROVIDE DOWELED CONSTRUCTION JOINT, DENOTED DKJ. SEE DETAIL B, SHEET CS501.
6. PROVIDE DOWELED CONTRACTION JOINT, DENOTED DCJ. SEE DETAIL C, SHEET CS501.
7. MATCH LINE FOR OPTIONS 1, 2 AND 3.
8. LIMIT OF CONSTRUCTION.

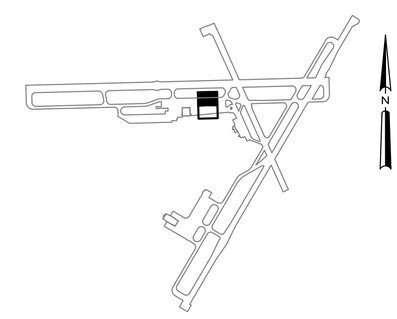

D KEY PLAN
NTS

CS103

NATIONAL AERONAUTICS AND SPACE ADMINISTRATION
GODDARD SPACE FLIGHT CENTER
WALLOPS FLIGHT FACILITY
WALLOPS ISLAND, VIRGINIA 23337

DATE	LET.	REVISIONS	CK.	AP.

PROJECT ENGINEER — DATE :
SUBMITTED BY — DATE : 5-5-2014
PROJECT MANAGER

NASA SAFETY — DATE 5-5-2014
FIRE PROTECTION — DATE : 5-5-2014

CONSTRUCTION MANAGEMENT — DATE : 5-5-2014
O & M — DATE : 5-5-2014

ENGINEERING APPROVAL — DATE 5-5-2014
ENGINEERING GROUP LEADER
BRANCH APPROVAL — DATE 5-5-2014
BRANCH HEAD

GRAPHIC SCALE 1"=20' 0' 20' 40'
AUTOCAD – RELEASE 2010
FILE NAME: '1-1337236-CS1
SCALE 1" = 20'
SHEET 16 OF 24

WALLOPS AIRFIELD REPAIR PROJECT
PHASE I
JOINT LAYOUT PLAN
PROJECT NUMBER: 1337236
DR. STH DATE:
CK. LMH REVISED:
DRAWING NO. 16944

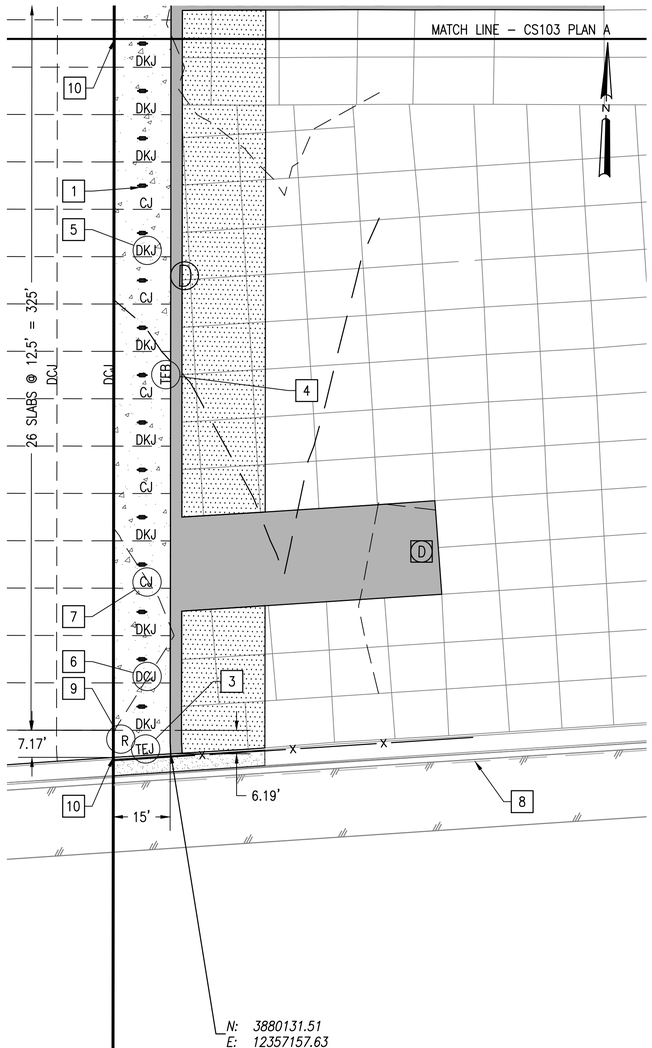

A JOINT LAYOUT PLAN - OPTION 1 (2 OF 2)
1" = 20'

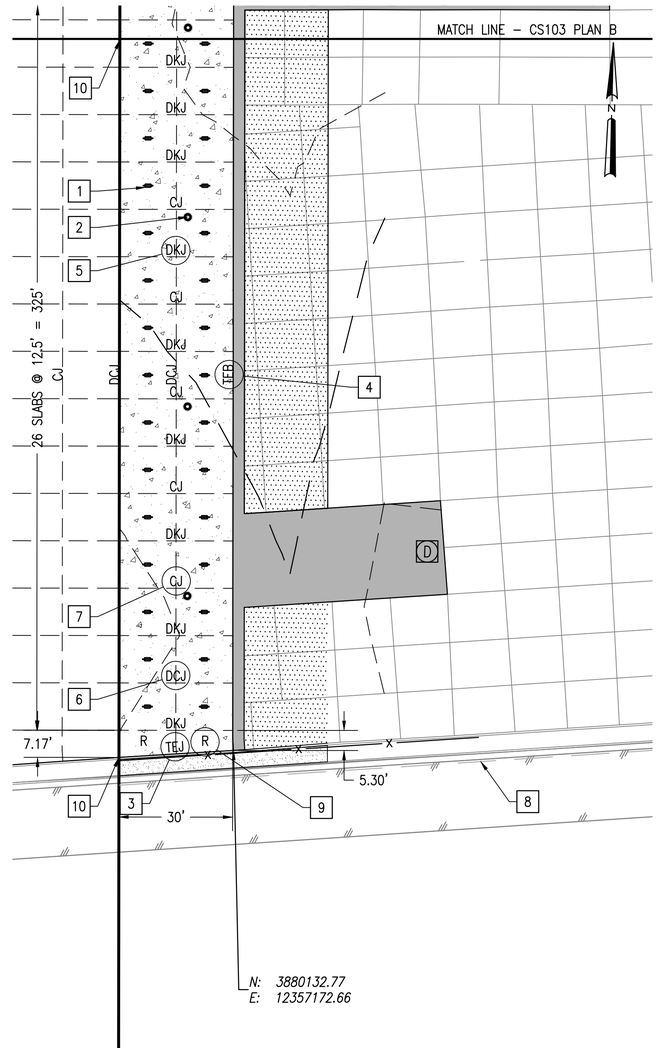

B JOINT LAYOUT PLAN - OPTION 2 (2 OF 2)
1" = 20'

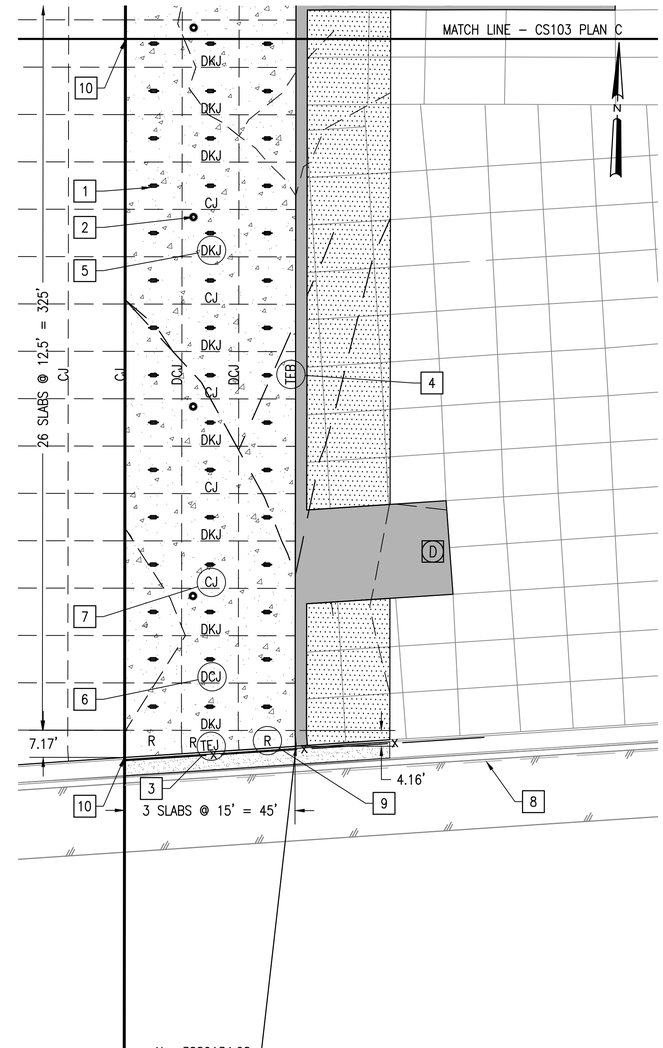

C JOINT LAYOUT PLAN - OPTION 3 (2 OF 2)
1" = 20'

SHEET NOTES

1. EXISTING CONTOURS AND EXISTING CONCRETE HATCH NOT SHOWN FOR CLARITY.

JOINT LAYOUT NOTES

1. PROVIDE MOORING EYES. 21 REQUIRED FOR OPTION 1, 42 REQUIRED FOR OPTION 2, AND 63 REQUIRED FOR OPTION 3. SEE DETAIL G, SHEET CS501,
2. PROVIDE 5 STATIC GROUND RECEPTACLES ON A 50 FOOT GRID. SEE DETAIL H, SHEET CS501.
3. PROVIDE THICKENED EDGE JOINT, DENOTED TEJ. SEE DETAIL A, SHEET CS501.
4. PROVIDE THICKENED EDGE BUTT JOINT, DENOTED TEB. SEE DETAIL D, SHEET CS501.
5. PROVIDE DOWELED CONSTRUCTION JOINT, DENOTED DKJ. SEE DETAIL B, SHEET CS501.
6. PROVIDE DOWELED CONTRACTION JOINT, DENOTED DCJ. SEE DETAIL C, SHEET CS501.
7. PROVIDE CONTRACTION JOINT, DENOTED CJ. SEE DETAIL C, SHEET CS501.
8. LIMIT OF CONSTRUCTION.
9. PROVIDE SLAB REINFORCEMENT, DENOTED R. SEE DETAIL A, B ,C OR D, SHEET CS501.
10. MATCH LINE FOR OPTIONS 1, 2 AND 3.

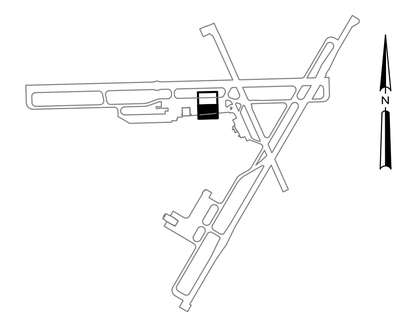

D KEY PLAN
NTS

CS104

NATIONAL AERONAUTICS AND SPACE ADMINISTRATION
GODDARD SPACE FLIGHT CENTER
WALLOPS FLIGHT FACILITY
WALLOPS ISLAND, VIRGINIA 23337

DATE	LET.	REVISIONS	CK.	AP.

PROJECT ENGINEER — DATE :
SUBMITTED BY — DATE : 5-5-2014
PROJECT MANAGER
NASA SAFETY — DATE 5-5-2014
FIRE PROTECTION — DATE : 5-5-2014
CONSTRUCTION MANAGEMENT — DATE : 5-5-2014
O & M — DATE : 5-5-2014
ENGINEERING APPROVAL — DATE 5-5-2014
ENGINEERING GROUP LEADER
BRANCH APPROVAL — DATE 5-5-2014
BRANCH HEAD

GRAPHIC SCALE 1"=20' 0' 20' 40'
AUTOCAD – RELEASE 2010
FILE NAME: '1-1337236-CS1
SCALE 1" = 20'
SHEET 17 OF 24

WALLOPS AIRFIELD REPAIR PROJECT
PHASE I
JOINT LAYOUT PLAN

PROJECT NUMBER: 1337236
DR. STH — DATE:
CK. LMH — REVISED:
DRAWING NO. 16945

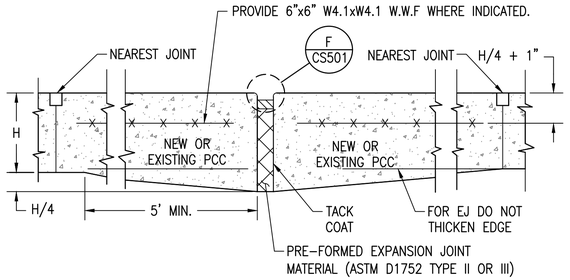

A THICKENED EDGE EXPANSION JOINT (TEJ)

NTS

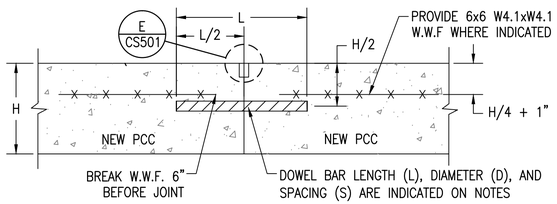

B DOWELED CONSTRUCTION JOINT (DKJ)

NTS

C (DOWELED) CONTRACTION JOINT (DCJ, CJ)

NTS

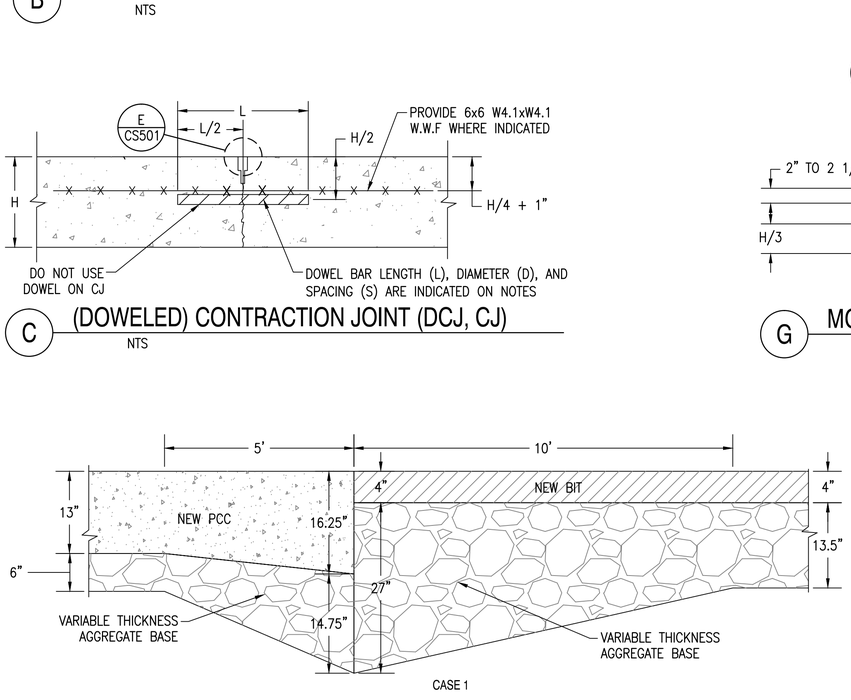

D THICKENED EDGE BUTT JOINT (TEB)

NTS

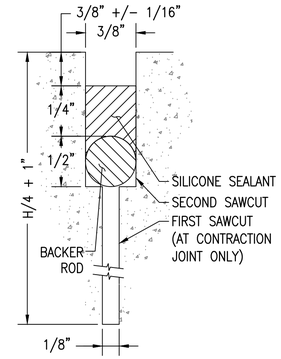

E SAWED JOINT

NTS

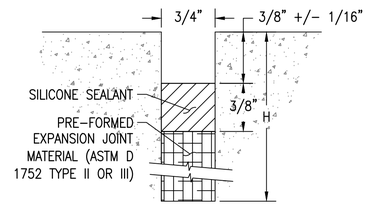

F EXPANSION JOINT

NTS

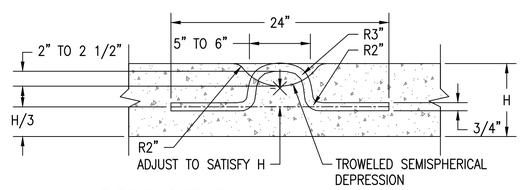

G MOORING EYE

NTS

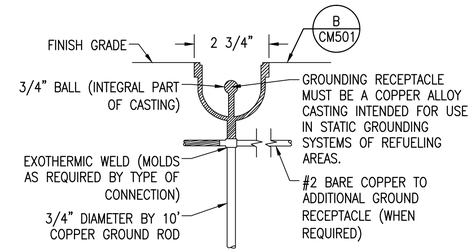

H STATIC GROUND RECEPTACLE

NTS

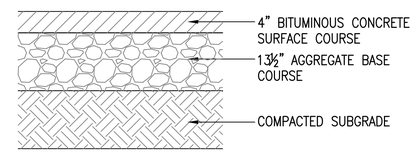

I HEAVY DUTY BITUMINOUS SECTION

NTS

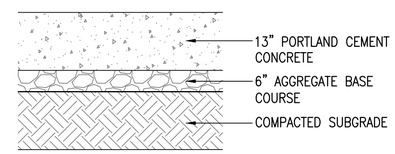

J HEAVY DUTY PCC SECTION

NTS

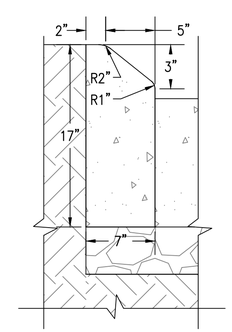

K CURB (CG-3)

NTS

AIRFIELD CONCRETE NOTES

1. PCC PAVEMENT THICKNESS "H" IS 13 INCHES THICK.
2. PROVIDE DOWELS WITH THE FOLLOWING DIMENSIONS:
   SOLID BAR DIAMETER "D" 1 ⅛ INCHES
   MINIMUM LENGTH "L" 20 INCHES
   MAXIMUM SPACING "S" 15 INCHES
3. DOWELS MUST BE NO CLOSER THAN 16 INCHES TO INTERSECTING JOINTS.
4. AT DOWELED CONSTRUCTION JOINTS (DKJ), DRILL & EPOXY DOWEL AT MID-DEPTH OF EXISTING PCC. PLACE DOWEL AT MID DEPTH OF NEW PCC, U.N.O.
5. CONCRETE MUST CONFORM TO SPECIFICATION 32 13 11 CONCRETE PAVEMENT FOR AIRFIELDS AND OTHER HEAVY-DUTY PAVEMENT.

MOORING EYE NOTES

1. PLACE MOORING EYE IN CENTER OF EACH NEW SLAB.
2. ORIENT MOORING EYE PARALLEL TO JOINT.
3. BAR MUST BE GALVANIZED, UNLESS NOTED OTHERWISE.

CONCRETE JOINT NOTES

1. BACKER ROD DIAMETER MUST BE 1/8 INCH GREATER THAN THE JOINT RESERVOIR WIDTH.
2. BACKER ROD MATERIAL MUST BE COMPATIBLE WITH SILICONE SEALANT.
3. BRING PRE-FORMED EXPANSION JOINT MATERIAL TO SURFACE DURING INITIAL CONSTRUCTION. PRE-FORMED EXPANSION JOINT MATERIAL MUST EXTEND TO THE BOTTOM OF NEW PCC.

PCC TO BIT. TRANSITION NOTES

1. SECTION APPLIED FULL WIDTH OF TAXIWAY.
2. COMPACT BIT. CONCRETE USING ROLLER BOTH PARALLEL AND PERPENDICULAR TO CENTERLINE. PROTECT PCC FROM DEBRIS/DAMAGE BY PROHIBITING ROLLER ON PCC & USING POWDERED LIME STRIP ON PCC PRIOR TO OPERATIONS.

SIX INCH CURB (CG-2) NOTES

1. CONCRETE MUST BE 4000 PSI AND CONFORM TO SPECIFICATION 03 30 00 CAST IN PLACE CONCRETE.

CS501

NATIONAL AERONAUTICS AND SPACE ADMINISTRATION
GODDARD SPACE FLIGHT CENTER
WALLOPS FLIGHT FACILITY
WALLOPS ISLAND, VIRGINIA 23337

DATE	LET.	REVISIONS	CK.	AP.

PROJECT ENGINEER — DATE :
SUBMITTED BY — DATE : 5-5-2014
PROJECT MANAGER
NASA SAFETY — DATE 5-5-2014
FIRE PROTECTION — DATE : 5-5-2014
CONSTRUCTION MANAGEMENT — DATE : 5-5-2014
O & M — DATE : 5-5-2014
ENGINEERING APPROVAL — DATE 5-5-2014
ENGINEERING GROUP LEADER
BRANCH APPROVAL — DATE 5-5-2014
BRANCH HEAD

GRAPHIC SCALE: NOT TO SCALE
AUTOCAD – RELEASE 2010
FILE NAME: '1-1337236-CS5
SCALE: NOT TO SCALE
SHEET 18 OF 24

WALLOPS AIRFIELD REPAIR PROJECT PHASE I
NEW WORK DETAILS
PROJECT NUMBER: 1337236
DR. STH DATE:
CK. LMH REVISED:
DRAWING NO. 16946

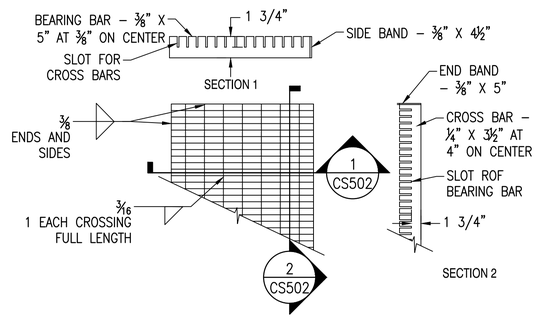

A AIRFIELD DROP INLET GRATE

NTS

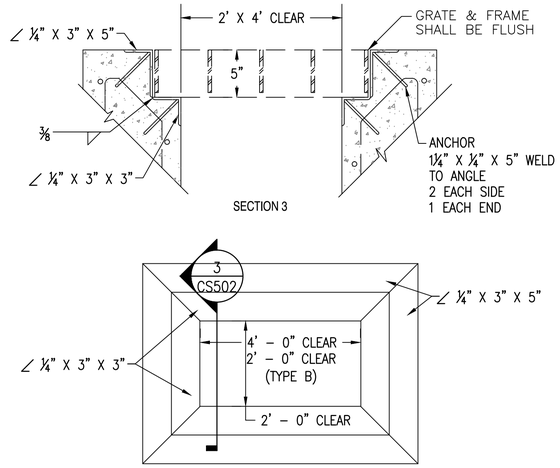

B AIRFIELD DROP INLET FRAME

NTS

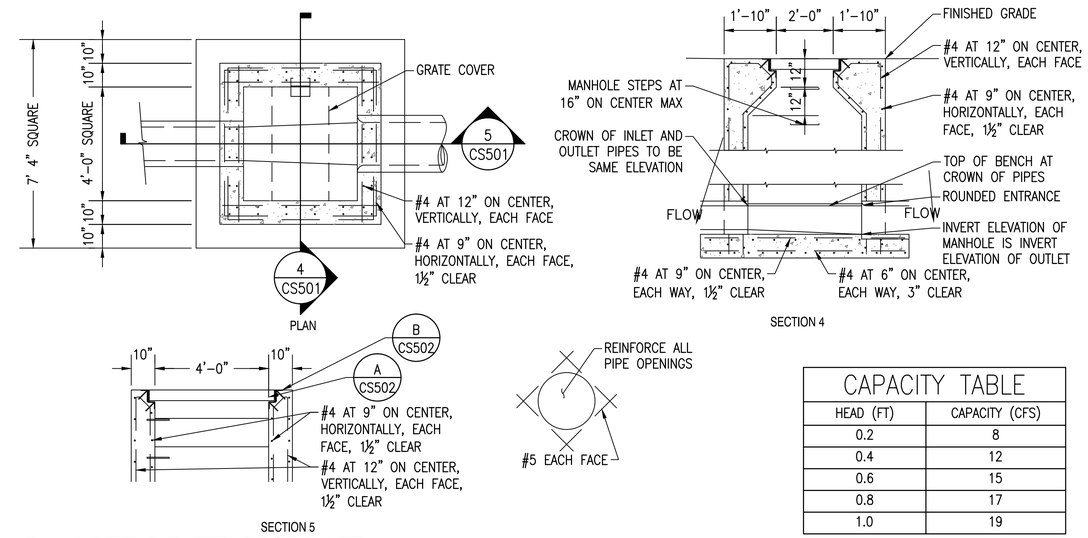

CAPACITY TABLE	
HEAD (FT)	CAPACITY (CFS)
0.2	8
0.4	12
0.6	15
0.8	17
1.0	19

C AIRFIELD RATED DROP INLET

NTS

GATE POST					
GATE LEAF WIDTH	GATE POST (OD)	FABRIC HEIGHT	"A" DIA	"B" DEPTH	"C" POST EMBEDMENT
3' TO 6'	2.875"	3' TO 5'	12"	38"	36"
		6' TO 9'	14"	42"	40"
		10' TO 12'	16"	46"	44"
7' TO 12'	4.000"	3' TO 5'	14"	38"	36"
		6' TO 9'	16"	42"	40"
		10' TO 12'	18"	46"	44"
13' TO 18'	6.625"	8' – 0"	16"	42"	40"

LINE AND TERMINAL POSTS				
FABRIC HEIGHT	POST TYPE	"A" DIA	"B" DEPTH	"C" POST EMBEDMENT
3'–0" TO 4'–0"	LINE	6"	26"	24"
	TERMINAL	10"	32"	30"
5'–0"	LINE	8"	32"	30"
	TERMINAL	10"	32"	30"
6'–0" TO 9'–0"	LINE	12"	38"	36"
	TERMINAL	12"	38"	36"
10'–0" TO 12'–0"	LINE	18"	38"	36"
	TERMINAL	18"	38"	36"
13'–0" TO 18'–0"	LINE	24"	42"	40"
	TERMINAL	24"	42"	40"

NOTE: TERMINAL POSTS INCLUDE END, CORNER, AND PULL POSTS

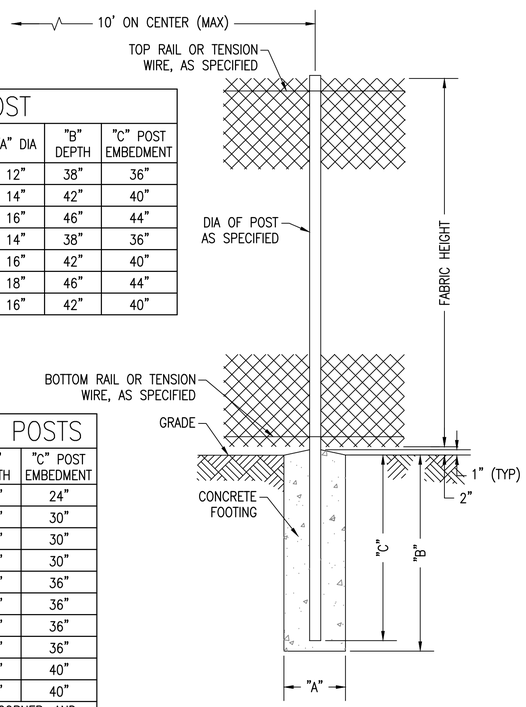

D CHAIN LINK FENCE

NTS

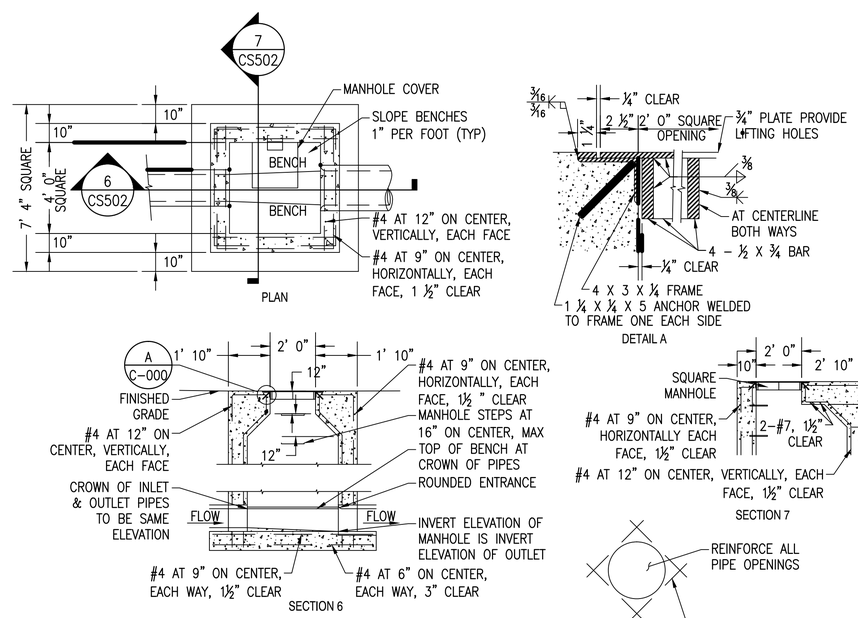

E AIRFIELD DROP MANHOLE

NTS

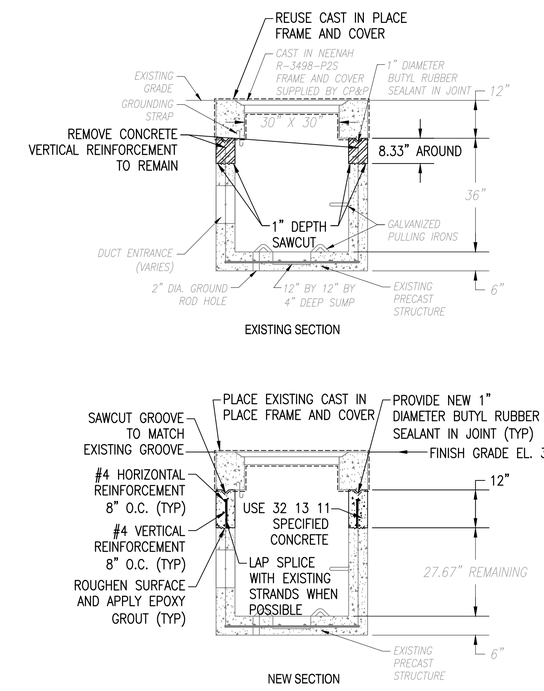

F RETROFIT 3 X 3 PRECAST HANDHOLE

NTS

CS502

NATIONAL AERONAUTICS AND SPACE ADMINISTRATION
GODDARD SPACE FLIGHT CENTER
WALLOPS FLIGHT FACILITY
WALLOPS ISLAND, VIRGINIA 23337

DATE	LET.	REVISIONS	CK.	AP.

PROJECT ENGINEER — DATE :
SUBMITTED BY — DATE : 5-5-2014
PROJECT MANAGER

NASA SAFETY — DATE 5-5-2014
FIRE PROTECTION — DATE : 5-5-2014

CONSTRUCTION MANAGEMENT — DATE : 5-5-2014
O & M — DATE : 5-5-2014

ENGINEERING APPROVAL — DATE 5-5-2014
ENGINEERING GROUP LEADER
BRANCH APPROVAL — DATE 5-5-2014
BRANCH HEAD

GRAPHIC SCALE: NOT TO SCALE
AUTOCAD – RELEASE 2010
FILE NAME: '1-1337236-CS5
SCALE: NOT TO SCALE
SHEET 19 OF 24

WALLOPS AIRFIELD REPAIR PROJECT
PHASE 1
NEW WORK DETAILS

PROJECT NUMBER: 1337236
DR. STH
CK. LMH
DATE:
REVISED:
DRAWING NO. 16947

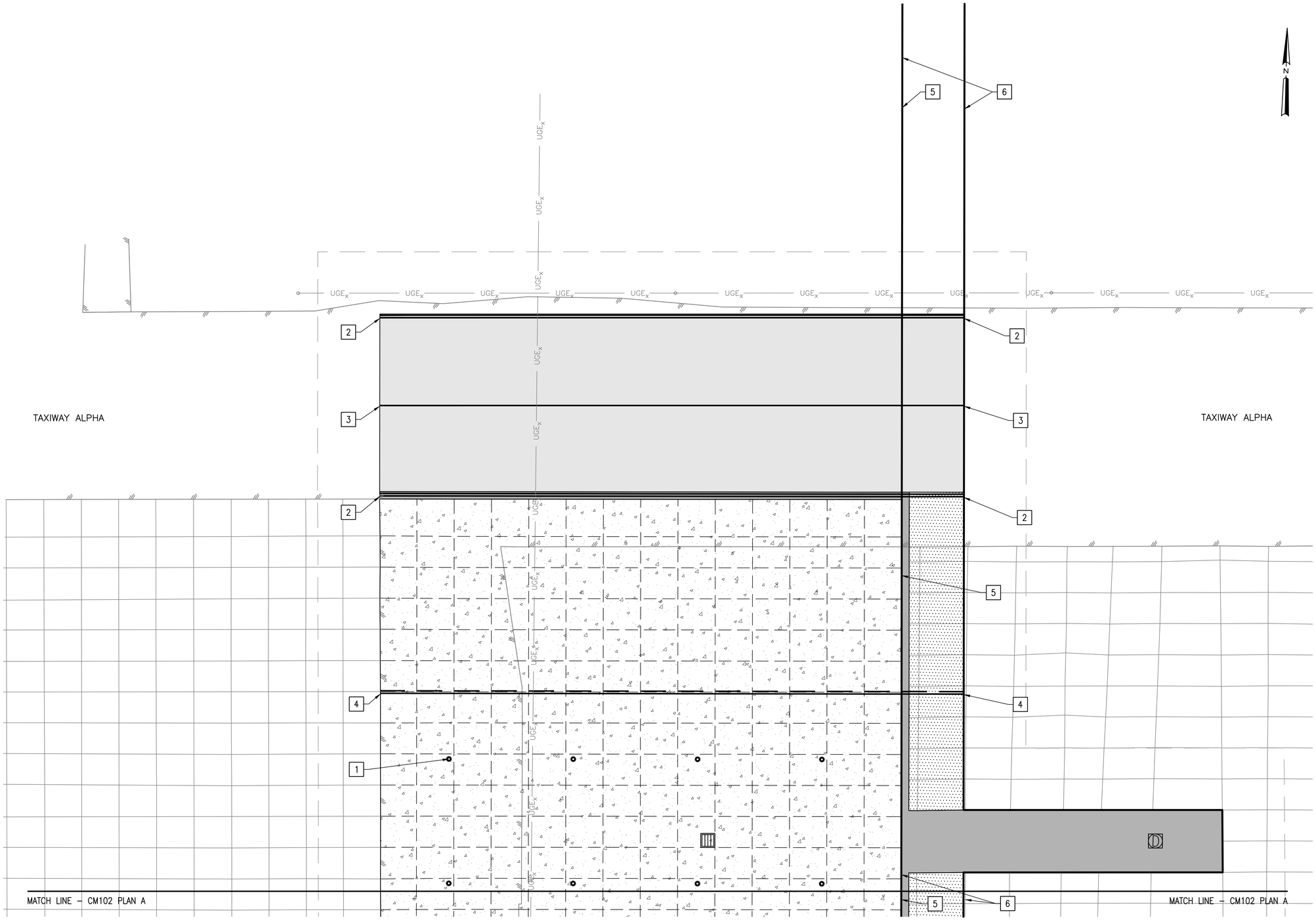

A MARKING PLAN (1 OF 2)
1" = 20'

MARKING NOTES

1. PROVIDE NEW GROUNDING POINT MARKING ON A 50 FOOT BY 50 FOOT GRID. SEE DETAIL B, SHEET CM501.
2. PROVIDE NEW TAXIWAY EDGE MARKINGS. TIE INTO EXISTING MARKINGS. SEE DETAIL A, SHEET CM501.
3. PROVIDE NEW TAXIWAY CENTERLINE MARKING. TIE INTO EXISTING MARKINGS. SEE DETAIL A, SHEET CM501.
4. PROVIDE NEW CLEARANCE MARKING. TIE INTO EXISTING MARKINGS. SEE DETAIL C, SHEET CM501.
5. MATCH LINE FOR OPTIONS 1, 2 AND 3.
6. BASE BID WORK BETWEEN LINES DENOTED MUST BE REMOVED FROM OPTION 1, 2 AND 3 BID PRICES.

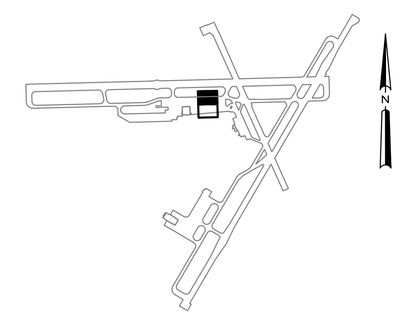

B KEY PLAN
NTS

CM101

NATIONAL AERONAUTICS AND SPACE ADMINISTRATION
GODDARD SPACE FLIGHT CENTER
WALLOPS FLIGHT FACILITY
WALLOPS ISLAND, VIRGINIA 23337

DATE	LET.	REVISIONS	CK.	AP.

PROJECT ENGINEER — DATE :
SUBMITTED BY — DATE : 5-5-2014
PROJECT MANAGER
NASA SAFETY — DATE 5-5-2014
FIRE PROTECTION — DATE : 5-5-2014
CONSTRUCTION MANAGEMENT — DATE : 5-5-2014
O & M — DATE : 5-5-2014
ENGINEERING APPROVAL — DATE 5-5-2014
ENGINEERING GROUP LEADER
BRANCH APPROVAL — DATE 5-5-2014
BRANCH HEAD

GRAPHIC SCALE 1"=20' 0' 20' 40'
AUTOCAD – RELEASE 2010
FILE NAME: '1-1337236-CM1
SCALE 1" = 20'
SHEET 20 OF 24

WALLOPS AIRFIELD REPAIR PROJECT
PHASE I
MARKING PLAN

PROJECT NUMBER: 1337236
DR. STH DATE:
CK. LMH REVISED:
DRAWING NO. 16948

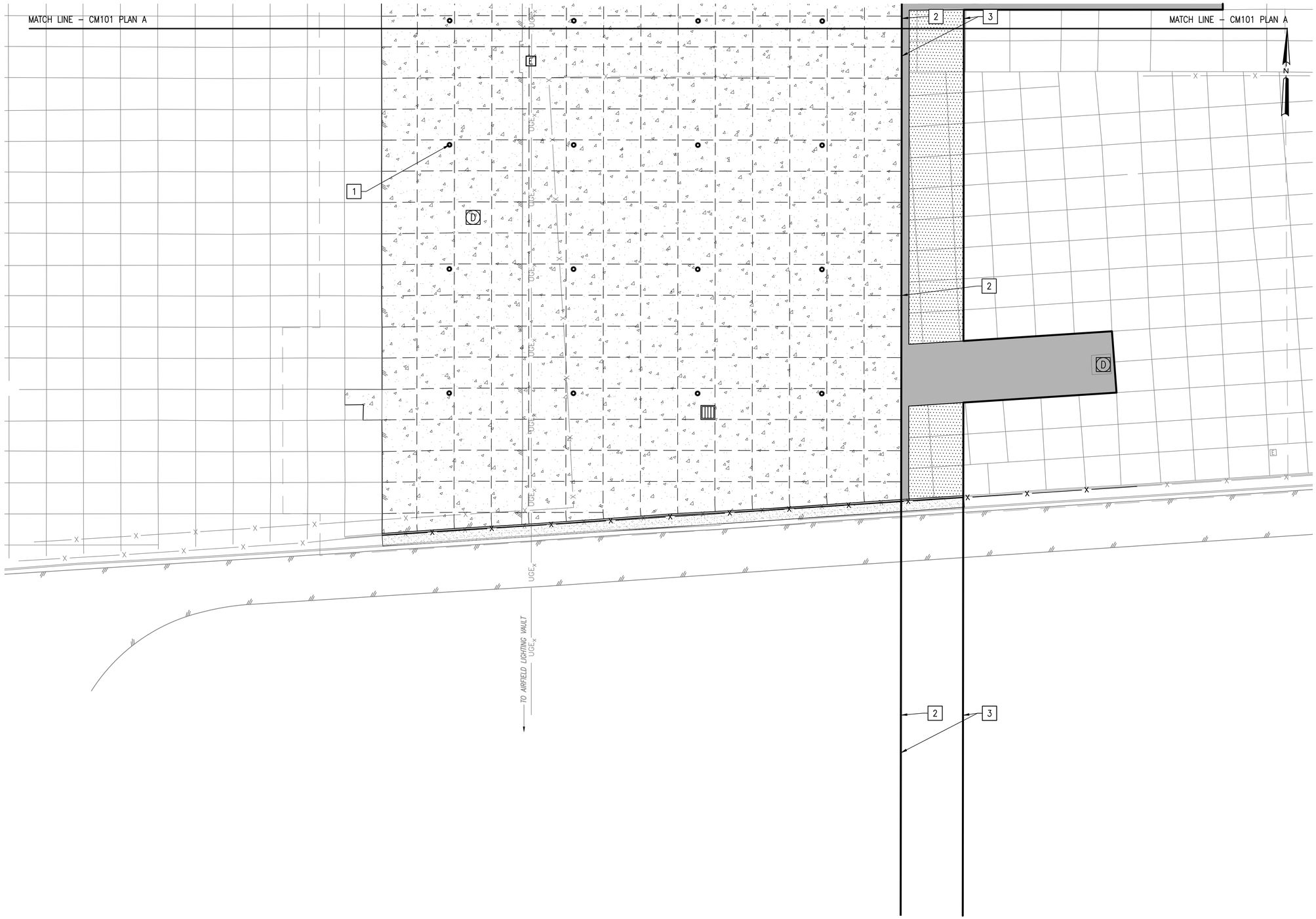

MARKING NOTES

1. PROVIDE NEW GROUNDING POINT MARKING ON A 50 FOOT BY 50 FOOT GRID. SEE DETAIL B, SHEET CM501.
2. MATCH LINE FOR OPTIONS 1, 2 AND 3.
3. BASE BID WORK BETWEEN LINES DENOTED MUST BE REMOVED FROM OPTION 1, 2 AND 3 BID PRICES.

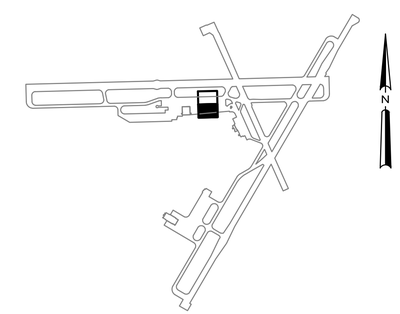

A MARKING PLAN (2 OF 2)
1" = 20'

B KEY PLAN
NTS

CM102

NATIONAL AERONAUTICS AND SPACE ADMINISTRATION
GODDARD SPACE FLIGHT CENTER
WALLOPS FLIGHT FACILITY
WALLOPS ISLAND, VIRGINIA 23337

DATE	LET.	REVISIONS	CK.	AP.

PROJECT ENGINEER — DATE :
SUBMITTED BY — DATE : 5-5-2014
PROJECT MANAGER
NASA SAFETY — DATE 5-5-2014
FIRE PROTECTION — DATE : 5-5-2014
CONSTRUCTION MANAGEMENT — DATE : 5-5-2014
O & M — DATE : 5-5-2014
ENGINEERING APPROVAL — DATE 5-5-2014
ENGINEERING GROUP LEADER
BRANCH APPROVAL — DATE 5-5-2014
BRANCH HEAD

GRAPHIC SCALE 1"=20' 0' 20' 40'
AUTOCAD – RELEASE 2010
FILE NAME: '1-1337236-CM1

SCALE 1" = 20'
SHEET 21 OF 24

WALLOPS AIRFIELD REPAIR PROJECT
PHASE I
MARKING PLAN

PROJECT NUMBER: 1337236
DR. STH DATE:
CK. LMH REVISED:

DRAWING NO. 16949

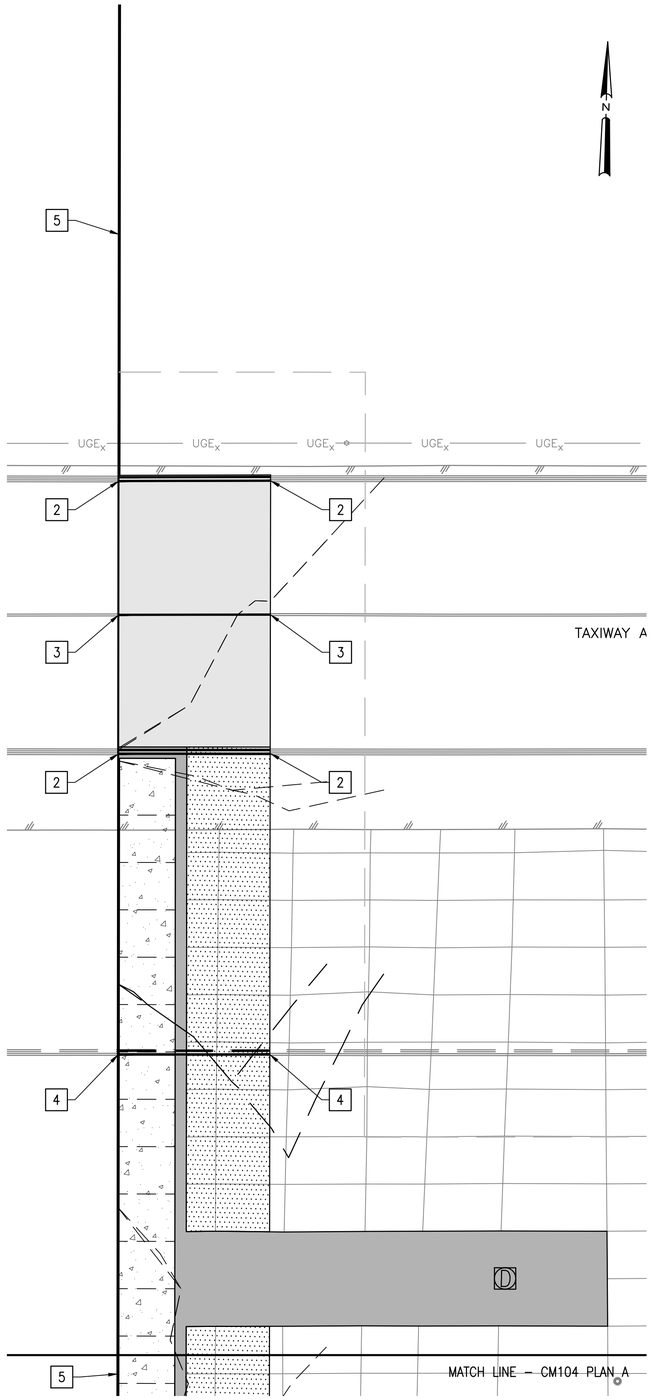

A MARKING PLAN - OPTION 1 (1 OF 2)
1" = 20'

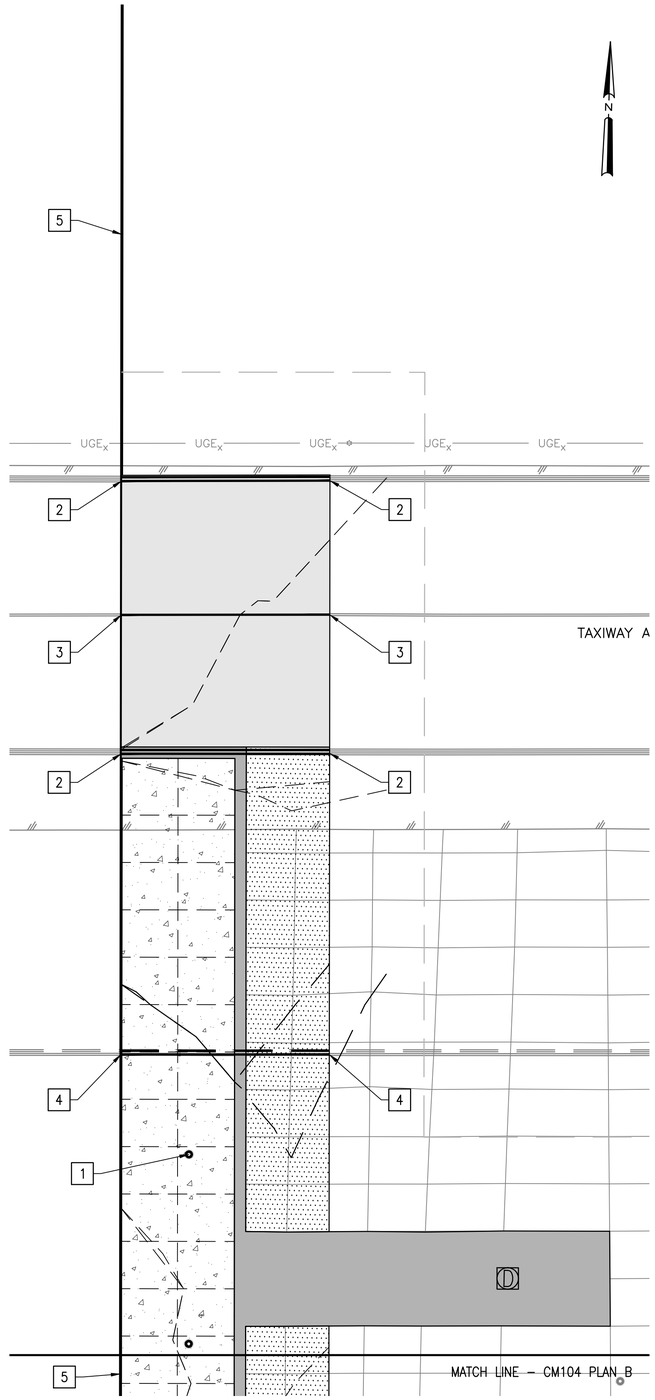

B MARKING PLAN - OPTION 2 (1 OF 2)
1" = 20'

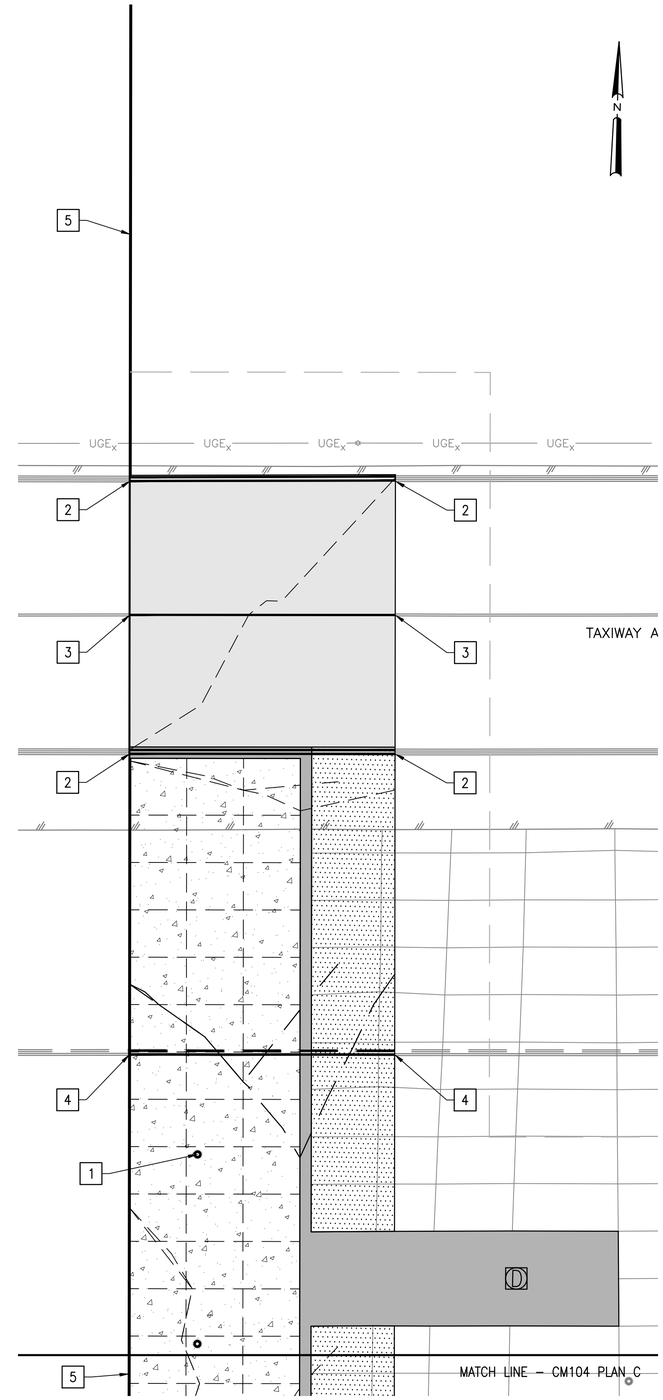

C MARKING PLAN - OPTION 3 (1 OF 2)
1" = 20'

MARKING NOTES

1. PROVIDE NEW GROUNDING POINT MARKING ON A 50 FOOT BY 50 FOOT GRID. SEE DETAIL B, SHEET CM501.
2. PROVIDE NEW TAXIWAY EDGE MARKINGS. TIE INTO EXISTING MARKINGS. SEE DETAIL A, SHEET CM501.
3. PROVIDE NEW TAXIWAY CENTERLINE MARKING. TIE INTO EXISTING MARKINGS. SEE DETAIL A, SHEET CM501.
4. PROVIDE NEW CLEARANCE MARKING. TIE INTO EXISTING MARKINGS. SEE DETAIL C, SHEET CM501.
5. MATCH LINE FOR OPTIONS 1, 2 AND 3.

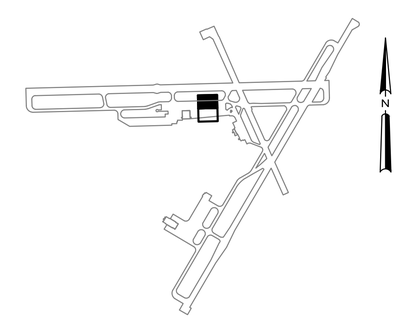

D KEY PLAN
NTS

CM103

NATIONAL AERONAUTICS AND SPACE ADMINISTRATION
GODDARD SPACE FLIGHT CENTER
WALLOPS FLIGHT FACILITY
WALLOPS ISLAND, VIRGINIA 23337

DATE	LET.	REVISIONS	CK.	AP.

PROJECT ENGINEER — DATE :
SUBMITTED BY — DATE : 5-5-2014
PROJECT MANAGER
NASA SAFETY — DATE 5-5-2014
FIRE PROTECTION — DATE : 5-5-2014
CONSTRUCTION MANAGEMENT — DATE : 5-5-2014
O & M — DATE : 5-5-2014
ENGINEERING APPROVAL — DATE 5-5-2014
ENGINEERING GROUP LEADER
BRANCH APPROVAL — DATE 5-5-2014
BRANCH HEAD

GRAPHIC SCALE 1"=20' 0' 20' 40'
AUTOCAD – RELEASE 2010
FILE NAME: '1-1337236-CM1
SCALE 1" = 20'
SHEET 22 OF 24

WALLOPS AIRFIELD REPAIR PROJECT PHASE I
MARKING PLAN
PROJECT NUMBER: 1337236
DR. STH
CK. LMH
DATE:
REVISED:
DRAWING NO. 16950

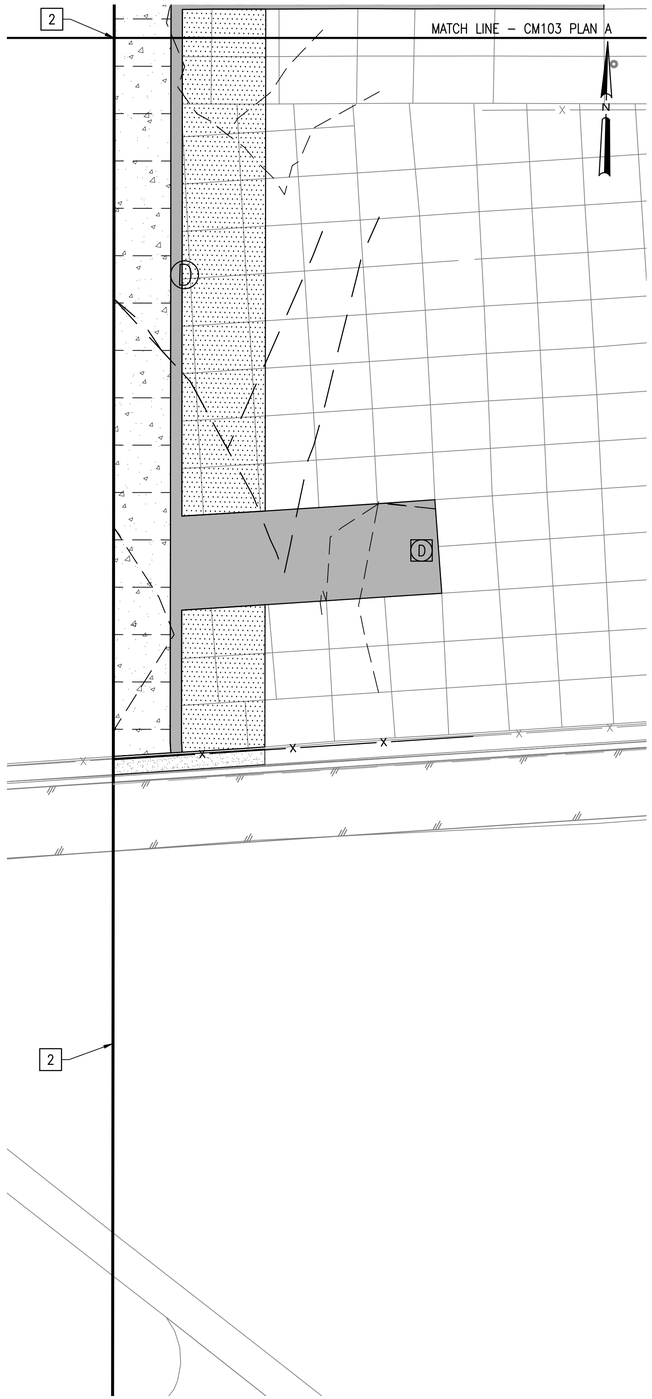

A MARKING PLAN - OPTION 1 (2 OF 2)
1" = 20'

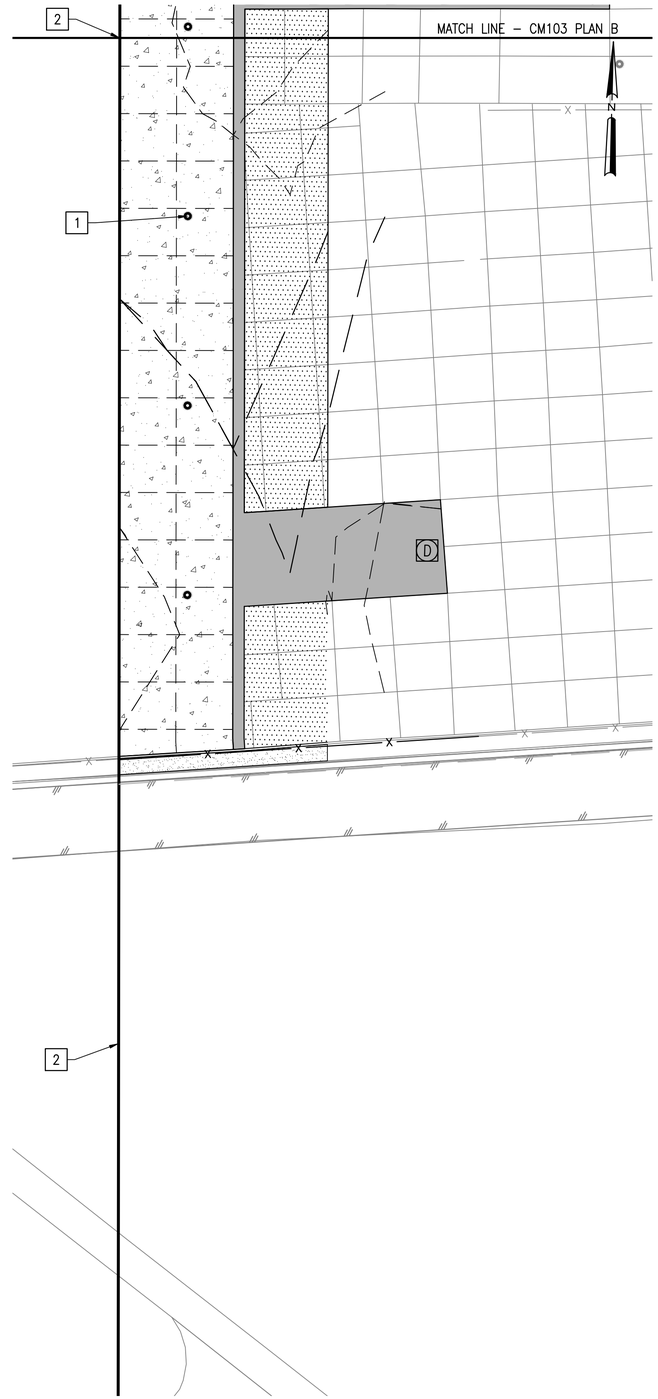

B MARKING PLAN - OPTION 2 (2 OF 2)
1" = 20'

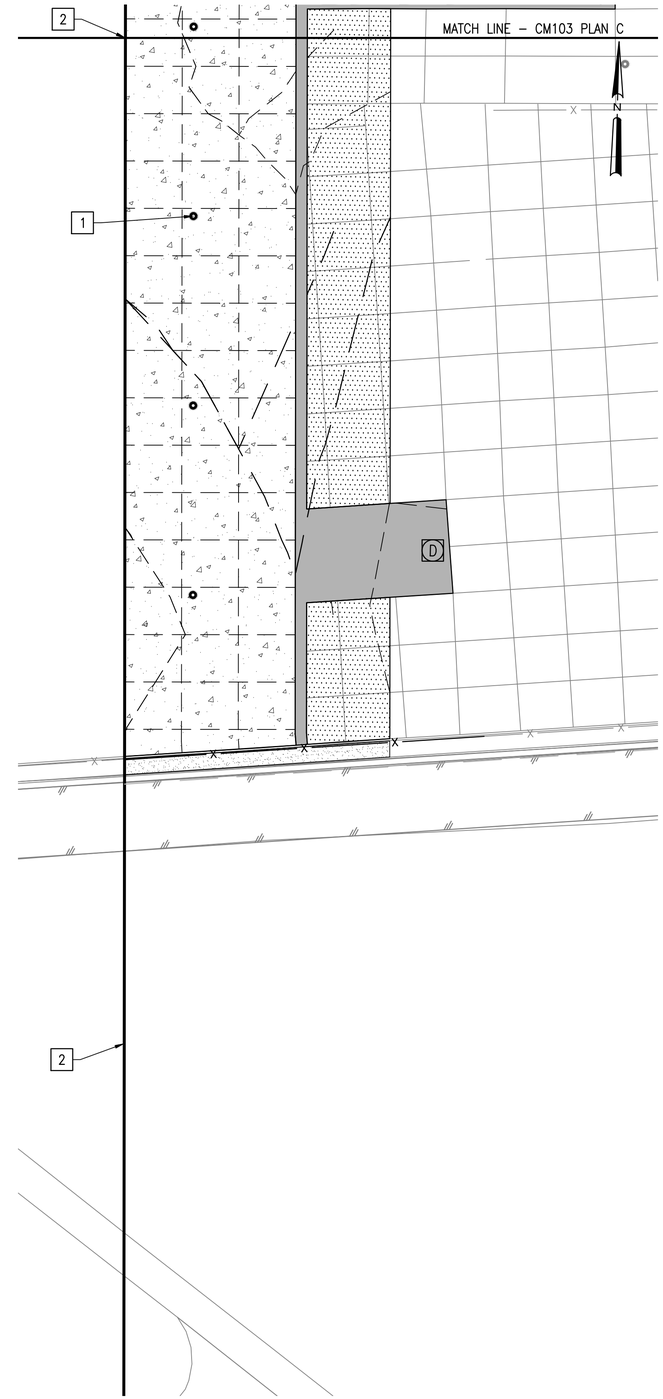

C MARKING PLAN - OPTION 3 (2 OF 2)
1" = 20'

1 PROVIDE NEW GROUNDING POINT MARKING ON A 50 FOOT BY 50 FOOT GRID. SEE DETAIL B, SHEET CM501.

2 MATCH LINE FOR OPTIONS 1, 2 AND 3.

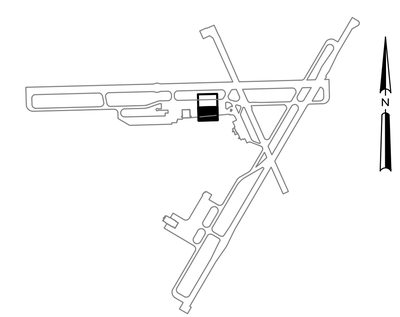

D KEY PLAN
NTS

CM104

NATIONAL AERONAUTICS AND SPACE ADMINISTRATION
GODDARD SPACE FLIGHT CENTER
WALLOPS FLIGHT FACILITY
WALLOPS ISLAND, VIRGINIA 23337

DATE	LET.	REVISIONS	CK.	AP.

PROJECT ENGINEER — DATE :
SUBMITTED BY — DATE : 5-5-2014
PROJECT MANAGER
NASA SAFETY — DATE 5-5-2014
FIRE PROTECTION — DATE : 5-5-2014
CONSTRUCTION MANAGEMENT — DATE : 5-5-2014
O & M — DATE : 5-5-2014
ENGINEERING APPROVAL — DATE 5-5-2014
ENGINEERING GROUP LEADER
BRANCH APPROVAL — DATE 5-5-2014
BRANCH HEAD

GRAPHIC SCALE 1"=20' 0' 20' 40'
AUTOCAD – RELEASE 2010
FILE NAME: '1-1337236-CM1
SCALE 1" = 20'
SHEET 23 OF 24

WALLOPS AIRFIELD REPAIR PROJECT
PHASE I
MARKING PLAN

PROJECT NUMBER: 1337236
DR. STH
CK. LMH
DATE:
REVISED:
DRAWING NO. 16951

TYPICAL PAINT MARKING NOTES

1. ALL STRIPPING MUST BE RETRO–REFLECTIVE, UNLESS NOTED OTHERWISE.
2. ALL MARKINGS ON CONCRETE PAVEMENT MUST HAVE A 6 INCH NON RETRO–REFLECTIVE BLACK BORDER.

STATIC GROUND MARKING NOTES

1. GROUNDING POINTS LOCATED IN PAVEMENT AS IDENTIFIED.
2. UPON INSTALLATION OF GROUND ROD, THE CONTRACTOR MUST TEST PER SPECIFICATIONS. TEST RESULTS MUST BE STENCILED ON THE PCC AT THE "OHMIC TEST" LOCATION AND A PRINTED COPY OF THE RESULTS MUST BE PROVIDED TO THE CONTRACTING OFFICER.

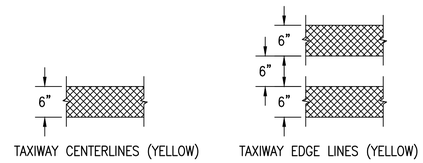

A TYPICAL PAINT MARKING
NTS

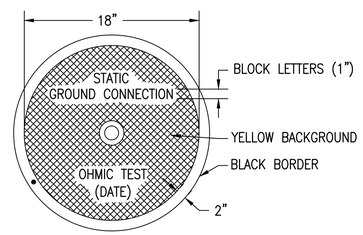

B TYPICAL STATIC GROUND MARKING
NTS

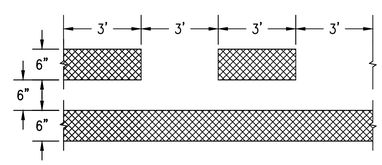

C TYPICAL CLEARANCE MARKING
NTS

CM501

NATIONAL AERONAUTICS AND SPACE ADMINISTRATION
GODDARD SPACE FLIGHT CENTER
WALLOPS FLIGHT FACILITY
WALLOPS ISLAND, VIRGINIA 23337

DATE	LET.	REVISIONS	CK.	AP.

PROJECT ENGINEER — DATE :
SUBMITTED BY — DATE : 5-5-2014
PROJECT MANAGER
NASA SAFETY — DATE 5-5-2014
FIRE PROTECTION — DATE : 5-5-2014
CONSTRUCTION MANAGEMENT — DATE : 5-5-2014
O & M — DATE : 5-5-2014
ENGINEERING APPROVAL — DATE 5-5-2014
ENGINEERING GROUP LEADER
BRANCH APPROVAL — DATE 5-5-2014
BRANCH HEAD

GRAPHIC SCALE
NOT TO SCALE

AUTOCAD – RELEASE 2010
FILE NAME: '1–1337236–CM5

SCALE
NOT TO SCALE
SHEET 24 OF 24

WALLOPS AIRFIELD REPAIR PROJECT
PHASE I
MARKING DETAILS

PROJECT NUMBER: 1337236
DR. STH
DATE:
CK. LMH
REVISED:

DRAWING NO.
16952