NOTICE – WHEN GOVERNMENT DRAWINGS, SPECIFICATIONS, OR OTHER DATA ARE USED FOR ANY PURPOSE OTHER THAN IN CONNECTION WITH A DEFINITELY RELATED GOVERNMENT PROCUREMENT OPERATION, THE UNITED STATES GOVERNMENT THEREBY INCURS NO RESPONSIBILITY NOR ANY OBLIGATION WHATSOEVER; AND THE FACT THAT THE GOVERNMENT MAY HAVE FORMULATED, FURNISHED, OR IN ANY WAY SUPPLIED THE SAID DRAWINGS, SPECIFICATIONS OR ANY OTHER DATA IS NOT TO BE REGARDED BY IMPLICATION OR OTHERWISE IN ANY MANNER LICENSING THE HOLDER OR ANY OTHER PERSONS OR CORPORATION, OR CONVEYING ANY RIGHTS OR PERMISSION TO MANUFACTURE, USE, OR SELL ANY PATENTED INVENTION THAT IN ANY WAY BE RELATED THERETO.

EXPORT CLASSIFICATION: EAR 99

The information contained in the document is technical in content, but not technical data as defined by the International Traffic in Arms Regulations (ITAR) or the Export Administration Regulations (EAR), and therefore is EAR 99 NLR, no export license required. [General Prohibition Six (Embargo) applies to all items subject to the EAR, (i.e., items on the CCL and within EAR 99 NLR). You may not make an export or re-export contrary to the provisions of part 746 (Embargos and Other Special Controls) of the EAR and 22 CFR part 126.1 of the ITAR].

Reference EDDR #1315748 – NASA KSC Export Control Office -- 321-867-9209.

REVISIONS

SYM	DESCRIPTION	DATE	APPROVAL
C	REV SHEETS 1 & 6	12-12-08	A. HAWKINS T. ADAMS
D	REV SHEETS 1 THRU 7; INC LSR 11-3015. 1. REV ITEM 3.	2008/ 07/23	A. MELTON T. ADAMS
E	REV SHEETS 3 & 4. SHEET 1 NO CHANGE.	2009/ 05/26	A. MELTON P. THOMAS
F	REV SHEETS 1, 3 & 4.	2012/ 09/10	J. GADDONE T. ADAMS

1. SERVICE: AIR, NITROGEN, HELIUM, HYD FLUIDS PER MIL-PRF-83383, MIL-PRF-5606, OR MIL-PRF-6083, GASEOUS HYDROGEN, GASEOUS OXYGEN, WATER, & ALL FLUIDS COMPATIBLE WITH 300 SERIES SST, & PTFE. SEE SERVICE LIMITATION ON SHEETS 3 & 4.

2. OPERATING PRESSURE: SEE SHEETS 3 & 4.

3. TEST PRESSURE:
1-1/2 X MAX DESIGN PRESSURE X $\frac{\text{ALLOWABLE STRESS @ TEST TEMP}}{\text{ALLOWABLE STRESS @ MAX DESIGN TEMP}}$

4. DESIGN: PER CRITERIA OF ANSI/ASME 31.3.

5. END CONNECTIONS: SEE SHEET 5.

6. LEAKAGE: BUBBLE TIGHT WHEN CHECKED WITH NITROGEN AT ROOM TEMP & AT RATED OPERATING PRESSURE FOR ONE MINUTE.

7. OPERATING TEMPERATURE: VENDOR'S PRESSURE RATINGS OF 1500 PSI & BELOW APPLY TO HOSES IN A TEMPERATURE RANGE FROM -65°F TO 450°F. VENDOR'S PRESSURE RATINGS OF 3000 PSI & ABOVE TO HOSES IN A TEMPERATURE RANGE FORM -65°F TO 400°F. HOSES FOR OXYGEN SERVICE ARE LIMITED TO A TEMPERATURE RANGE OF -65°F TO 160°F.

8. MATERIALS: INNER HOSE SHALL BE SEAMLESS POLYTETRAFLUOROETHYLENE WITH CARBON ADDITIVE FOR HOSE ASSEMBLIES 79K80463-1 THRU -15. OXYGEN HOSE ASSEMBLIES 79K80463-17 THRU -31, SHALL HAVE INNER HOSE MADE FROM SEAMLESS WHITE VIRGIN POLYTETRAFLUOROETHYLENE WITH NO CARBON ADDITIVES. METALLIC PARTS SHALL BE 304, 316, 321, AND 347 SST.

9. CLEANING: CLEAN, PROTECT, & INSPECT PER KSC-C-123.
   A. PROCEDURE: AS APPLICABLE.
   B. CLEANLINESS: LEVEL 300 A.
   C. TEST METHOD: I.
   D. CERTIFICATION REQUIRED.
   INITIAL CLEANING TO BE ACCOMPLISHED BY VENDOR.

10. TESTING: THE MANUFACTURER SHALL HYDROSTATICALLY TEST HOSE ASSEMBLIES PER ITEM 3 & LEAK CHECK PER ITEM 6. CERTIFICATION REQUIRED.

11. MARKING: THE VENDOR'S NAME OR TRADEMARK, VENDOR'S PART NO., KSC PART NO. AND REV LETTER, HYDROSTATIC TEST DATE, BATCH TEST NUMBER (WHERE APPLICABLE) & RATED OPERATING PRESSURE SHALL BE MARKED BY THE MANUFACTURER PERMANENTLY AND LEGIBLY UPON THE ASSEMBLY.

COMPONENT SPECIFICATION AND MAINTENANCE DRAWING

THIS COMPUTER DRAWING WAS CREATED IN MICROSTATION AND FILED UNDER THE DRAWING NUMBER

SEE ENGINEERING RECORDS

NEXT ASSY	USED ON
	KSC GSE

APPLICATION

UNLESS OTHERWISE SPECIFIED
DIMENSIONS ARE IN INCHES
TOLERANCES ON FRACTIONS DECIMALS ANGLES
MATERIAL
HEAT TREATMENT
FINAL PROTECTIVE FINISH

ORIGINAL DATE OF DRAWING FEB. 1988
DRAFTER CHECKER
CHECKER STRESS
ENGINEER RDH ENGINEER
SUBMITTED F. E. LUNDY
APPROVED W. I.MOORE

HOSE ASSEMBLY

WEIGHT CHECKER DATE CODE 22264
SCALE UNIT WEIGHT SEE SH 3 & 4

JOHN F. KENNEDY SPACE CENTER, NASA
KENNEDY SPACE CENTER FLORIDA

DWG SIZE B 79K80463
SHEET 1 OF 7

KSC FORM 21-4 (REV. 2/91) (C/G 3/93)

EAR 99

12. PACKAGING: PER MANUFACTURER'S STANDARD COMMERCIAL PRACTICE PROVIDED THAT PACKING SHALL BE SUFFICIENT TO PROTECT HOSE ASSEMBLY AGAINST DAMAGE DURING SHIPMENT. EXTERIOR SHIPPING CONTAINER SHALL CONFORM TO FREIGHT CLASSIFICATION RULES AND APPLICABLE CONTAINER SPECIFICATIONS.

13. APPROVAL: ANY CHANGE TO THE COMPONENTS DESCRIBED BY THIS DRAWING REQUIRES VENDOR TO NOTIFY KSC PROCURING AGENT/AUTHORITY IN WRITING.

14. VENDOR DATA: WHEN SPECIFIED ON THE PURCHASE ORDER, THE VENDOR SHALL PROVIDE THREE (3) SETS OF NON-RESTRICTIVE ASSEMBLY DRAWINGS, PARTS LISTS, TECHNICAL DATA, INSTRUCTIONS, ETC., SUITABLE FOR INSPECTION, TEST AND MAINTENANCE.

15. INSTALLATION REQUIREMENTS: HOSE INSTALLATION DESIGNS SHALL REQUIRE HOSE RESTRAINTS PER KSC-STD-Z-0005.

16. DIMENSIONS: SEE SHEETS 3, 4 & 5.

17. MOUNTING ATTITUDE: ANY POSITION.

18. SUGGESTED SOURCE: SMITHS TUBULAR SYSTEMS - LACONIA (TITEFLEX)
CAGE 78570

SEE 79K80260 FOR ALTERNATE SOURCE.

REVISIONS

SYM	DESCRIPTION	DATE	APPROVAL
A	SHT REDRAWN	88-10	R. D. HALL
B	REVISED ITEMS 13 & 18.	2-10-06	A. MELTON T. ADAMS
D	1. REVISED ITEM 18. 2. ADDED SUBTITLE.	2008/ 07/23	A. MELTON T. ADAMS

EAR 99

THIS COMPUTER DRAWING WAS CREATED IN MICROSTATION AND FILED UNDER THE DRAWING NUMBER

COMPONENT SPECIFICATION

CODE IDENT NO.	DWG SIZE	
22264	B	79K80463
		SHEET 2 OF

KSC FORM 21-4B (REV. 2/91) (C/G 3/93)

CADD BLOCKED

SPECIFIC NOTES:

A THE LAST FOUR DIGITS OF BOTH KSC & VENDOR PART NO. ARE TO BE ADDED WHEN HOSE ASSY LENGTH IS DETERMINED. SEE SH 5.

B VENDOR SHALL MAKE HOSE ASSY'S UP TO THE LENGTH LISTED WITHOUT SPLICES. NO THREADED UNION FITTINGS PERMITTED FOR SPLICING.

C HOSE ASSY'S -1 THRU -15 ARE NOT FOR USE IN OXYGEN SERVICE.

D THESE HOSE ASSY'S ARE FOR OXYGEN SERVICE UP TO OPERATING PRESSURES SHOWN.

REVISIONS

SYM	DESCRIPTION	DATE	APPROVAL
D	1. REV VENDOR P/N, HOSE O.D., PERFORMANCE SPEC & MIN BEND RADIUS FOR -2 ASSY. 2. DELETED FLAG NOTE E. 3. ADDED SUBTITLE. 4. INC LSR 11-3015.	2008/ 07/23	A. MELTON T. ADAMS
E	1. REV INFO FOR -2, -5, -8, -11 AND -13 ASSYS.	2009/ 05/26	A. MELTON P. THOMAS
F	REV FLAG NOTE D	2012/ 09/10	J. GADDONE T. ADAMS

BASIC KSC NUMBER A C	BASIC VENDOR PART NO. A	VENDOR DRAWING NUMBER	NOMINAL (TUBE) SIZE	HOSE I.D. (REF)	MIN BEND RADIUS (INCHES)	OPERATING PRESSURE PSI MAX	MAX AMBIENT TEMP F	HOSE WT LBS/FT (REF)	FITTINGS WT LBS EA (REF)	HOSE O.D. (REF)	(FT) B	PERFORMANCE SPEC (DESIGN REF)
79K80463-1-	18000004-	112600	1/4	.173	2	1500	450	.080	.046	.343	50	—
79K80463-2-	24000004-	112601	1/4	.229	2.5	3000	400	.134	.066	.390	50	SAE-AS1339
79K80463-3-	37000004-	112602	1/4	.229	3	6000	400	.240	.070	.495	50	SAE-AS614
79K80463-4-	13000006-	112603	3/8	.298	4	1500	450	.110	.079	.469	50	MIL-DTL-25579
79K80463-5-	24000006-	112604	3/8	.300	2.5	3000	400	.168	.090	.490	30	SAE-AS1339
79K80463-6-	37000006-	112605	3/8	.300	5	6000	400	.400	.119	.617	30	SAE-AS614
79K80463-7-	13000008-	112606	1/2	.3912	4.6	1500	450	.140	.131	.585	30	MIL-DTL-25579
79K80463-8-	24000008-	112607	1/2	.395	2.875	3000	400	.240	.150	.615	30	SAE-AS1339
79K80463-9-	37000008-	112608	1/2	.395	5.75	6000	400	.490	.206	.738	30	SAE-AS614
79K80463-10-	13000012-	112609	3/4	.615	6.5	1000	450	.240	.280	.812	25	MIL-DTL-25579
79K80463-11-	24000012-	112610	3/4	.650	3.875	3000	400	.660	.360	.990	25	SAE-AS1339
79K80463-12-	13000016Z-	112611	1	.851	7.3	1250	450	.520	.462	1.140	25	MIL-DTL-25579
79K80463-13-	24000016-	112612	1	.875	5.0	3000	400	1.02	.570	1.270	25	SAE-AS1339
79K80463-14-	13000020Z-	112613	1-1/4	1.101	11	1000	450	.680	.844	1.390	22	MIL-DTL-25579
79K80463-15-	13000024Z-	112614	1-1/2	1.344	14	1000	450	.840	1.109	1.707	20	MIL-DTL-25579
79K80463-16-	—	—	—	—	—	—	—	—	—	—	—	—

COMPONENT SPECIFICATION

THIS COMPUTER DRAWING WAS CREATED IN MICROSTATION AND FILED UNDER THE DRAWING NUMBER

EAR 99

CODE IDENT NO.	DWG SIZE	79K80463
22264	B	SHEET 3 OF

KSC FORM 21-48 (REV. 2/81) (CXG 3/83)

FOR SPECIFIC NOTES, SEE SHEET 3.

REVISIONS			
SYM	DESCRIPTION	DATE	APPROVAL
D	1. REV VENDOR P/N, HOSE O.D., PERFORMANCE SPEC & MIN BEND RADIUS FOR -18 ASSY. 2. ADDED SUBTITLE. 3. INC LSR 11-3015.	2008/ 07/23	A. MELTON T. ADAMS
E	1. REV INFO FOR -18, -21, -24, -27 AND -29 ASSYS.	2009/ 05/26	A. MELTON P. THOMAS
F	DEL FLAG NOTE D FROM REMARKS COLUMN	2012/ 09/10	J. GADDONE T. ADAMS

BASIC KSC NUMBER A D	BASIC VENDOR PART NO. A	VENDOR DRAWING NUMBER	NOMINAL (TUBE) SIZE	HOSE I.D. (REF)	MIN BEND RADIUS (INCHES)	OPERATING PRESSURE PSI MAX	MAX FLUID AMBIENT TEMP DEG F	HOSE WT LBS/FT (REF)	FITTINGS WT LBS EA (REF)	HOSE O.D. (REF)	(FT) B	REMARKS	PERFORMANCE SPEC (DESIGN REF)
79K80463-17-	15000004-	112615	¼	.173	2	1500	160	.080	.046	.343	50		———
79K80463-18-	25000004-	112616	¼	.229	2.5	3000	160	.134	.066	.390	50		SAE-AS1339
79K80463-19-	35000004-	112617	¼	.229	3	6000	160	.240	.070	.495	50		SAE-AS614
79K80463-20-	15000006-	112618	⅜	.298	4	1500	160	.110	.079	.469	50		MIL-DTL-25579
79K80463-21-	25000006-	112619	⅜	.300	2.5	3000	160	.168	.090	.490	30		SAE-AS1339
79K80463-22-	35000006-	112620	⅜	.300	5	6000	160	.400	.119	.617	30		SAE-AS614
79K80463-23-	15000008-	112621	½	.391	4.6	1500	160	.140	.131	.585	30		MIL-DTL-25579
79K80463-24-	25000008-	112622	½	.395	2.875	3000	160	.240	.150	.615	30		SAE-AS1339
79K80463-25-	35000008-	112623	½	.395	5.75	6000	160	.490	.206	.738	30		SAE-AS614
79K80463-26-	15000012-	112624	¾	.615	6.5	1000	160	.240	.280	.812	25		MIL-DTL-25579
79K80463-27-	25000012-	112625	¾	.650	3.875	3000	160	.660	.360	.990	25		SAE-AS1339
79K80463-28-	15000016Z-	112626	1	.851	7.3	1250	160	.520	.462	1.140	25		MIL-DTL-25579
79K80463-29-	25000016-	112627	1	.875	5.0	3000	160	1.02	.570	1.270	25		SAE-AS1339
79K80463-30-	15000020Z-	112628	1-1/4	1.101	11	1000	160	.680	.844	1.390	22		MIL-DTL-25579
79K80463-31-	15000024Z-	112629	1-1/2	1.344	14	1000	160	.840	1.109	1.707	20		MIL-DTL-25579
79K80463-32-	—	—	—	—	—	—	—	—	—	—	—		

EAR 99

THIS COMPUTER DRAWING WAS CREATED IN MICROSTATION AND FILED UNDER THE DRAWING NUMBER

COMPONENT SPECIFICATION

CODE IDENT NO.	DWG SIZE	79K80463
22264	B	SHEET 4 OF

KSC FORM 21-4B (REV. 2/91) (C/G 3/93)

REVISIONS			
SYM	DESCRIPTION	DATE	APPROVAL
A	SHT REDRAWN.	88-10	R. D. HALL
B	1. ADDED IDENT TAG 2. REV HOSE ASSEMBLY NOTE	2-10-06	A. MELTON T. ADAMS
D	1. REV IDENT TAG NOTE. 2. ADDED SUBTITLE.	2008/ 07/23	A. MELTON T. ADAMS

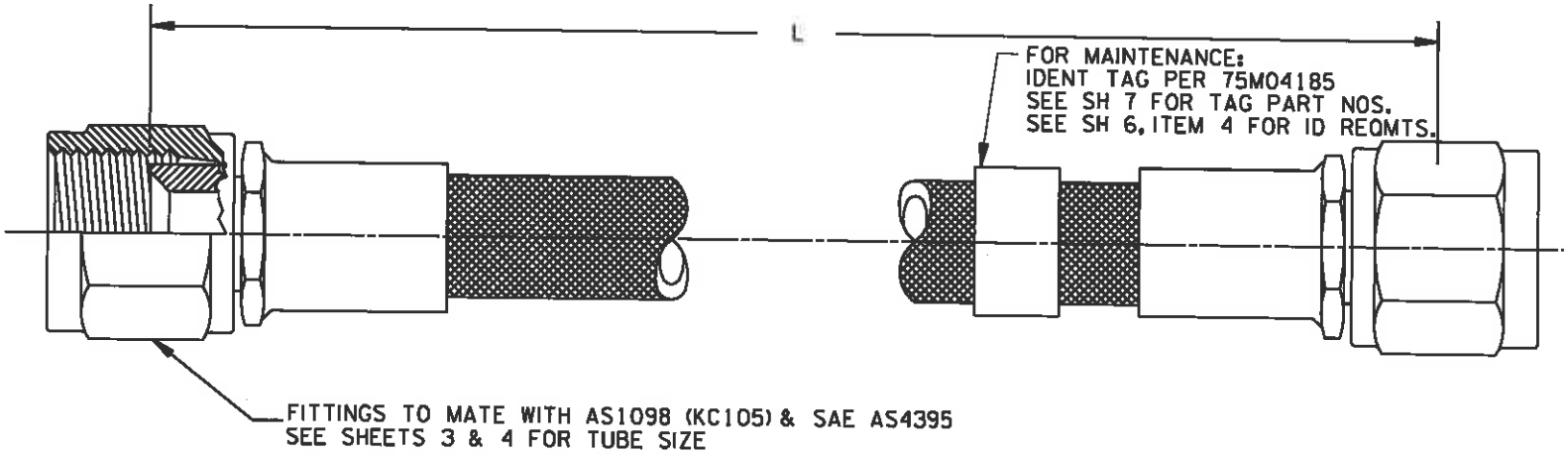

HOSE ASSEMBLY

SCALE: NONE

SPECIFIC NOTES:

A. LENGTH "L" SHALL BE SPECIFIED BY FOUR DIGITS WHICH BECOME A PART OF THE ASSEMBLY PART NUMBER. THE FIRST THREE DIGITS ARE TO INDICATE INCHES, THE LAST DIGIT TO INDICATE FRACTIONS IN EIGHTHS. FOR EXAMPLE:

79K80463-9-0846 IS A HOSE ASSEMBLY 84-3/4 INCHES LONG.
FRACTION OF AN INCH IN EIGHTHS.
LENGTH IN INCHES.

B. LENGTH "L" TOLERANCES:
UNDER 18 INCHES LONG ±1/8 INCH
FROM 18 TO 36 INCHES ±1/4 INCH
FROM 36 TO 50 INCHES ±1/2 INCH
OVER 50 INCHES ±1%

EAR 99

THIS COMPUTER DRAWING WAS CREATED IN MICROSTATION AND FILED UNDER THE DRAWING NUMBER

COMPONENT SPECIFICATION

CODE IDENT NO.	DWG SIZE	
22264	B	79K80463
		SHEET 5 OF

KSC FORM 21-4B (REV. 2/91) (C/G 3/93)

CAD CLIENT LOCKED

REVISIONS			
SYM	DESCRIPTION	DATE	APPROVAL
C	REVISED. 1. REV NOTE 4.	12-12-06	A. HAWKINS T. ADAMS
D	1. ADDED SUBTITLE. 2. REV NOTE 4.	2008/ 07/23	A. MELTON T. ADAMS

THIS SHEET DEFINES THE MINIMUM MAINTENANCE AND REVALIDATION REQUIREMENTS FOR HOSE ASSEMBLY 79K80463.

REQUIREMENTS	APPLICABLE SPECIFICATIONS, STANDARDS, ETC.	REMARKS
1. LEAKAGE:	SEE ITEM 6, SHEET 1.	
2. OXYGEN COMPATIBILITY:	SEE ITEM 8, SHEET 1.	
3. HYDROSTATIC TEST PRESSURE:	SEE ITEM 3, SHEET 1.	
4. IDENTIFICATION:	ALL HOSE ASSY'S REWORKED PER THIS DWG SHALL BE IDENTIFIED BY A FIRMLY ATTACHED TAG PER 75M04185 (SEE SH 5) WHICH IS PERMANENTLY & LEGIBLY MARKED PER KSC-STD-E-0015. MARKINGS SHALL INCLUDE THIS DWG NO. & REVISION LETTER, DATE (MONTH & YEAR) OF HYDROSTATIC TEST & RATED OPERATING PRESSURE. ALTERNATELY, INFORMATION MAY BE STAMPED OR EMBOSSED ON A "DOG TAG" (NSN 8465-00-242-4804) THAT IS ATTACHED BY A STAINLESS STEEL WIRE ROPE (0.040-INCH MIN DIA) PER MIL-DTL-83420. THE ROPE ENDS SHALL BE SECURED WITH AN ELECTRO-TIN PLATED COPPER FERRULE OR WITH A COPPER WIRE-ROPE SWAGING SLEEVE.	SEE SH 3, 4 & 7 FOR PRESSURE & TAG PART NO.
5. CLEANLINESS:	SEE ITEM 9, SHEET 1.	
6. INSTALLATION TORQUE:	KSC-SPEC-Z-0008	
7. INSPECTION:	HOSE ASSY'S SHALL BE INSPECTED FOR EVIDENCE OF KINKS, FLATTENED AREAS, BROKEN WIRE BRAID, DAMAGED FITTINGS, OR OTHER DEGRADATION. HOSE SHALL BE REPLACED IF ANY DEGRADATION IS FOUND.	INSPECT ANNUALLY

COMPONENT MAINTENANCE

THIS COMPUTER DRAWING WAS CREATED IN MICROSTATION AND FILED UNDER THE DRAWING NUMBER

CODE IDENT NO.	DWG SIZE	
22264	B	79K80463
		SHEET 6 OF

EAR 99

KSC FORM 21-4B (REV. 2/91) (C/G 3/93)

CAD CELL LOCKED

SPECIFIC NOTES:

A. KSC ID TAG P/N APPLIES ONLY TO BASIC KSC P/N SHOWN ON THIS SHEET. ID TAG IS INSTALLED DURING MAINTENANCE. SEE SHEET 6, ITEM 4 FOR ALTERNATE IDENTIFICATION CRITERIA.

B. DUE TO LACK OF SALES ACTIVITY FROM KSC, AEROQUIP CORP (PURCHASED IN 1999 BY EATON CORP) DECIDED IN 2006 THAT THEY WOULD NO LONGER SUPPLY 79K80264 FLEXHOSES TO KSC. COLUMN REFERENCING 79K80264 PART NUMBERS HAS BEEN REMOVED.

REVISIONS

SYM	DESCRIPTION	DATE	APPROVAL
B	THIS SHEET ADDED	2-10-06	A. MELTON T. ADAMS
D	1. ADDED NOTES A & B. 2. DELETED 79K80260-3, -6, -9, -16, -19, -22, -25 & -32 ASSYS. 3. DELETED 79K80264 COLUMN. 4. ADDED SUBTITLE.	2008/07/23	A. MELTON T. ADAMS

BASIC KSC PART NO.	KSC IDENT. TAG PART NO. A	ALTERNATE F/H EQUIVALENT SPEC/PART NO.
79K80463-1-	75M04185-1-24	79K80260-1
79K80463-2-	75M04185-2-0	79K80260-2
79K80463-3-	75M04185-2-7	———
79K80463-4-	75M04185-2-5	79K80260-4
79K80463-5-	75M04185-2-17	79K80260-5
79K80463-6-	75M04185-2-20	———
79K80463-7-	75M04185-2-16	79K80260-7
79K80463-8-	75M04185-2-29	79K80260-8
79K80463-9-	75M04185-3-0	———
79K80463-10-	75M04185-3-7	79K80260-10
79K80463-11-	75M04185-4-1	79K80260-11
79K80463-12-	75M04185-4-8	79K80260-12
79K80463-13-	75M04185-5-1	79K80260-13
79K80463-14-	75M04185-5-1	79K80260-14
79K80463-15-	75M04185-6-1	79K80260-15

BASIC KSC PART NO.	KSC IDENT. TAG PART NO. A	ALTERNATE F/H EQUIVALENT SPEC/PART NO.
79K80463-17-	75M04185-1-24	79K80260-17
79K80463-18-	75M04185-2-0	79K80260-18
79K80463-19-	75M04185-2-7	———
79K80463-20-	75M04185-2-5	79K80260-20
79K80463-21-	75M04185-2-17	79K80260-21
79K80463-22-	75M04185-2-20	———
79K80463-23-	75M04185-2-16	79K80260-23
79K80463-24-	75M04185-2-29	79K80260-24
79K80463-25-	75M04185-3-0	———
79K80463-26-	75M04185-3-7	79K80260-26
79K80463-27-	75M04185-4-1	79K80260-27
79K80463-28-	75M04185-4-8	79K80260-28
79K80463-29-	75M04185-5-1	79K80260-29
79K80463-30-	75M04185-5-1	79K80260-30
79K80463-31-	75M04185-6-1	79K80260-31

COMPONENT MAINTENANCE

THIS COMPUTER DRAWING WAS CREATED IN MICROSTATION AND FILED UNDER THE DRAWING NUMBER

CODE IDENT NO.	DWG SIZE	79K80463
22264	B	SHEET 7 OF 7

EAR 99

PAGE LOCKED