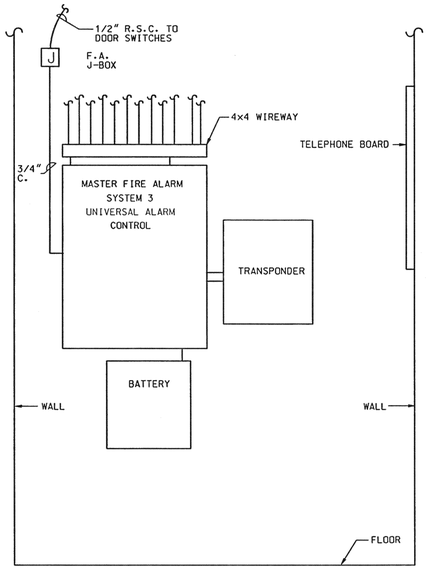

1 — FIRE ALARM ELEVATION - RM. 1E1, WEST WALL

16 | 18 SCALE: 1" = 1'-0"

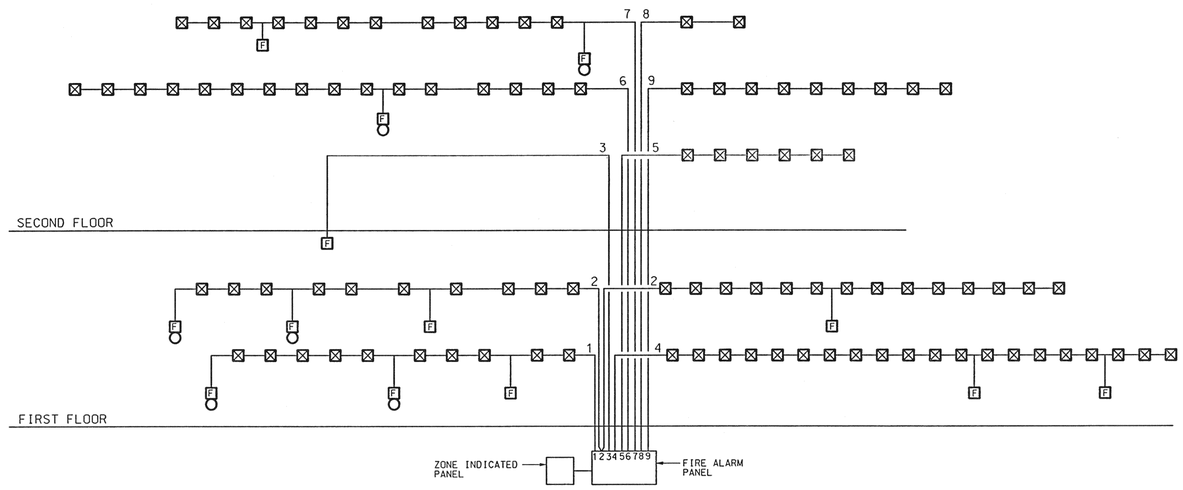

2 — FIRE ALARM - ONE LINE DIAGRAM

18 | 18 N.T.S.

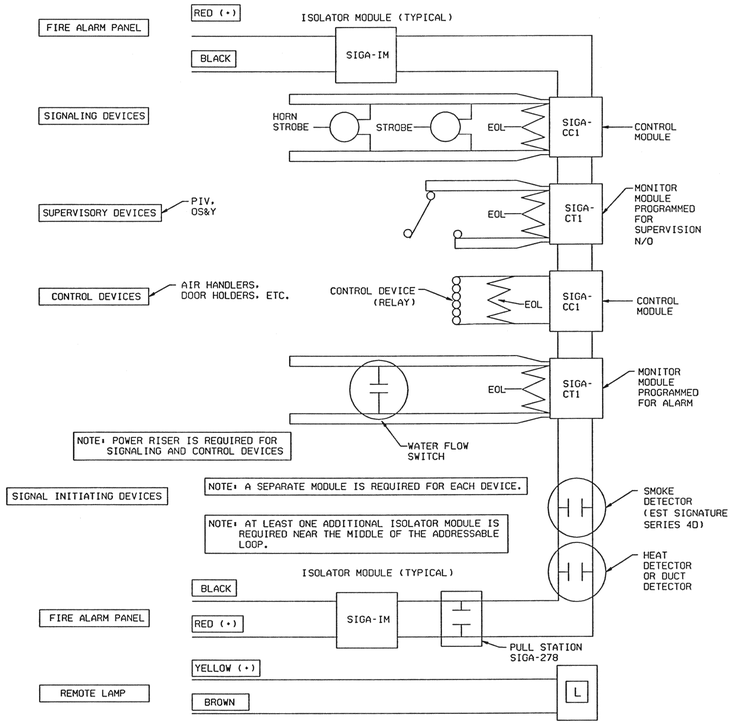

3 — WIRING REQUIREMENTS FOR ADDRESSABLE FIRE ALARM SYSTEM

18 | 18 N.T.S. NOTE: CATALOG NUMBERS LISTED ARE FOR EST SIGNATURE SERIES DEVICES.

1"=1'-0" 1' 6" 0 1' 2'

GRAPHIC SCALE

RELEASED
Date 2-1-0 Rev B Init

REVISION	DATE	DESCRIPTION
AS-BUILT	02-5-07	DYN190533(AM) COF02106(NAR)
AS-BUILT	1-13-94	W17600 CoF9226.81010 A01041(JET) CoF89030(GJB)

SIGNATURES		DATE
DR.JET	ENG REDRAWN	09-29-92
CH GJB	APPR DDN	3-16-95
DAVID CISNEROS		3-16-95
REV		
DISCP		
PE		
APPR RON WILLIAMS		3-16-95

NATIONAL AERONAUTICS & SPACE ADMINISTRATION
LYNDON B. JOHNSON SPACE CENTER HOUSTON, TEXAS

BUILDING 207

FIRE ALARM ELEVATION & ONE LINE DIAGRAM

PROJECT NO. | SHEET NO. ___ OF ___
PROJECT ID WR
CODE IDENT NO. 21356 | SIZE E | DWG NO. E-207-18

CAD FILE NAME: E207Z18.DGN