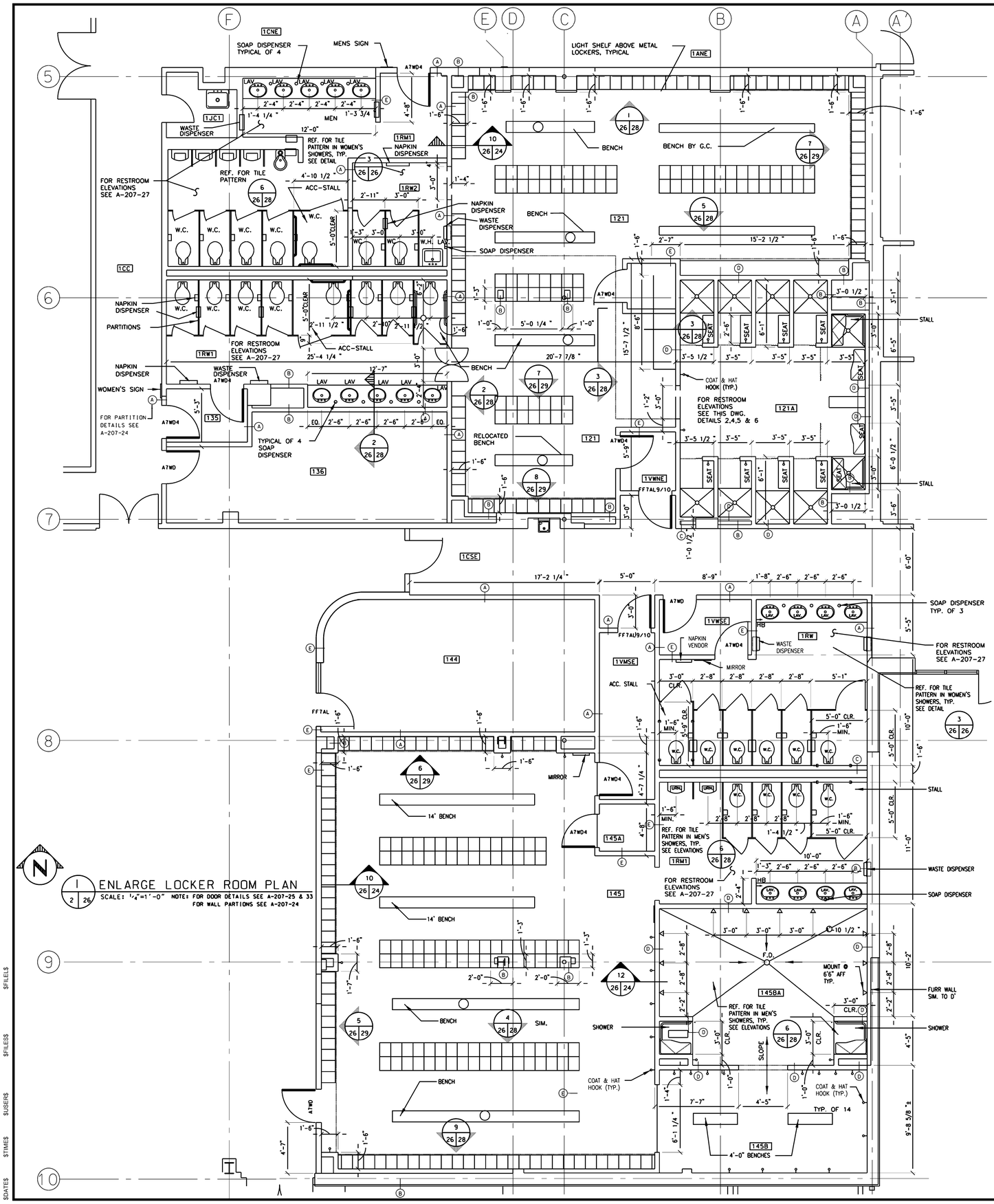

1 ENLARGE LOCKER ROOM PLAN
SCALE: 1/4"=1'-0" NOTE: FOR DOOR DETAILS SEE A-207-25 & 33 FOR WALL PARTIONS SEE A-207-24

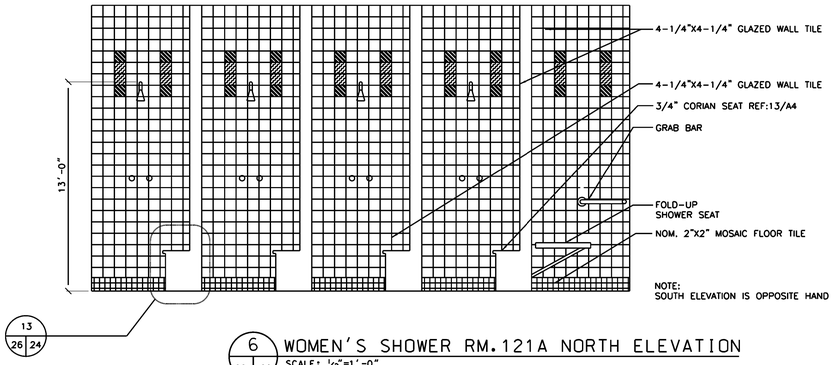

6 WOMEN'S SHOWER RM.121A NORTH ELEVATION
SCALE: 1/2"=1'-0"

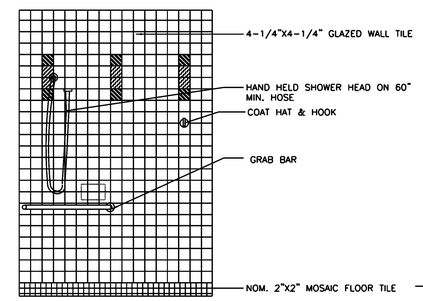

5 WOMEN'S SHOWER RM.121A ACCESSIBLE
SCALE: 1/2"=1'-0"

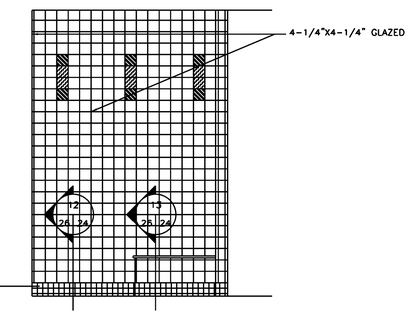

4 WOMEN'S SHOWER RM.121A
SCALE: 1/2"=1'-0"

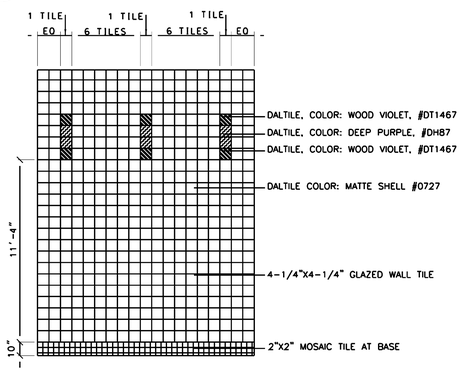

3 WOMENS RR & SHOWER TYP. ELEVATION RM.1RW & 1RW2
SCALE: 1/2"=1'-0"

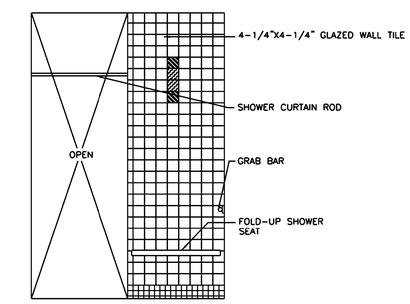

2 WOMEN'S SHOWER RM.121A ACCESSIBLE
SCALE: 1/2"=1'-0"

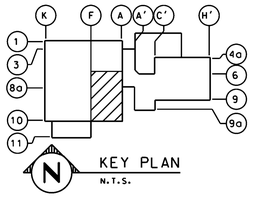

KEY PLAN
N.T.S.

GRAPHIC SCALES

CAD FILE NAME: A207Z26.DGN

REVISION	DATE	DESCRIPTION		
AS-BUILT	06-13-13	COF02106(PAG)	W46707(GJB)	W49650(DT)

SIGNATURES		DATE
DR.PETE G	ENG REDRAWN	1-8-07
CH GJB	APPR GJB	1/30/07
GLENN J. BUNCH		1/30/07
REV		
DISCP		
PE		
APPR C. BENNETT		1/30/07

NATIONAL AERONAUTICS & SPACE ADMINISTRATION
LYNDON B. JOHNSON SPACE CENTER HOUSTON, TEXAS
BUILDING 207

ENLARGED LOCKER ROOM PLAN

PROJECT NO.
PROJECT ID WR
CODE IDENT NO. 21356
SIZE F
SHEET NO. ___ OF ___
DWG NO. A-207-26

$FILE$ $FILE$ $USER$ $TIME$ $DATE$