NOTES: UNLESS OTHERWISE SPECIFIED

1. THIS ITEM IS SPACE FLIGHT HARDWARE. EVIDENCE OF INSPECTION AND ACCEPTANCE IS REQUIRED. ALL ITEMS OF THE BILL OF MATERIAL REQUIRES MATERIAL TEST REPORTS (MTR'S) AND CERTIFICATES OF CONFORMANCE/COMPLIANCE (COC'S) UNLESS OTHERWISE SPECIFIED.
2. INTERPRET DRAWING PER ASME Y14.100-2004.
3. INTERPRET DIMENSIONS AND TOLERANCES IAW ASME Y14.5-2009.
4. THE FOLLOWING SOLVENTS ARE ACCEPTABLE FOR USE DURING THE CLEANING OF METALLIC HARDWARE ONLY:
   ETHYL ALCOHOL
   ISOPROPYL ALCOHOL
5. REMOVE ALL SHARP EDGES PER BEST SHOP PRACTICES.
6. ZONE DESIGNATIONS

X	SHEET NUMBER OF DRAWING
XX	ZONE

7. PART MARKING: BAG & TAG THIS ITEM PER MIL-STD-130 USING THE FOLLOWING FORMAT:
   102986-XXX (INSERT APPLICABLE DASH NUMBER)
8. NOTE REMOVED.

(9) INSTALL INSERTS AFTER ANODIZE IN ACCORDANCE WITH MS33537, REMOVE TANG.

(10) TORQUE FASTENERS IN ACCORDANCE WITH MSFC-STD-486. VALUES SHOWN ON FIELD OF DRAWING ARE ABOVE RUNNING TORQUE.

(11) ITEMS 16 AND 17 SINTERED TOGETHER IN ACCORDANCE WITH A QA-CERTIFIED VENDOR PROCESS. AT A MINIMUM, CERTIFICATES OF CONFORMANCE/COMPLIANCE MUST BE PROVIDED.

(12) FINISH: ANODIZE IAW MIL-A-8625, TYPE II, CLASS2. COLOR: GOLD IN THE RANGE BETWEEN 2 SUPPLIED PLATES. ON TEST COUPON ONLY, CONDUCT STAIN RESISTANCE TESTS IAW ASTM-B136-84.

(13) ALL DIMENSIONS AND TOLERANCES APPLY AFTER ANODIZE.

(14) FABRICATE IN ACCORDANCE WITH ADS-87-00-019.

(15) INSTALL ITEM NUMBER 12 WITH ULTRASONIC INSTALLATION METHOD. SEE NOTE 22 FOR SOURCE.

(16) SECURE THREADS AT ASSEMBLY USING ADHESIVE, ITEM NUMBER 19.

(17) SUGGESTED SOURCE OF SUPPLY:
   TRI STAR INDUSTRIES, INC
   101 MASSIRIO DRIVE
   BERLIN, CT 06037

18. NOTE REMOVED

(19) SUGGESTED SOURCE OF SUPPLY:
   LOCTITE CORP
   705 N MOUNTAIN ROAD
   NEWINGTON, CT 06111-1411

(20) SUGGESTED SOURCE OF SUPPLY:
   SABIC
   2250 ZANKER RD., SUITE B
   SAN JOSE, CA 95131

(21) SUGGESTED SOURCE OF SUPPLY:
   HOWARD WIRE CLOTH
   28976 HOPKINS ST #A
   HAYWARD, CA 94545

(22) SOURCE FOR ULTRASONIC INSTALLATION:
   PELHAM PLASTICS INC.
   ATTN: JOHN MACKEY (PRESIDENT)
   4 INDUSTRIAL DR., SUITE 38
   PELHAM, NH 03078
   PHONE: 603-886-7226
   FAX: 603-886-3311

23. LEGEND FOR ASSEMBLY COMPONENT BALLOON CALLOUTS:

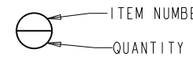

24. ANY FEATURE THAT IS NOT FULLY DIMENSIONED WILL BE CONTROLLED BY THE CAD MODEL. VERIFY THAT THE MODEL REFERENCED FOR FABRICATION HAS THE SAME REVISION LEVEL AS THE MOST RECENT DRAWING.

(25) FIRST ARTICLE INSPECTION PER SAE AS9100 FOR EACH MANUFACTURING BATCH IS REQUIRED. INSPECTION MAY BE DONE PRIOR TO THE APPLICATION OF ANY SURFACE TREATMENT. UNIQUE IDENTIFICATION OF THE INSPECTED FIRST ARTICLE ITEM IS REQUIRED. AFTER THIS INITIAL COMPLETE INSPECTION, NO FORMAL DIMENSIONAL INSPECTION REPORT IS NECESSARY FOR THIS COMPONENT.

(26) BASIC SHOP WORKMANSHIP SHALL BE APPLIED, BUT NO FORMAL DIMENSIONAL INSPECTION REPORT IS NECESSARY FOR THIS COMPONENT. FINAL TORQUE ON ALL FASTENERS MUST BE WITNESSED BY QA.

(27) ALTERNATE PART NUMBER: NAS1102E04-8

(28) ALTERNATE PART NUMBER: NAS1189E04T4J

(29) FIRST ARTICLE INSPECTION PER SAE AS9100 FOR EACH MANUFACTURING BATCH IS REQUIRED. UNIQUE IDENTIFICATION OF THE INSPECTED FIRST ARTICLE ITEM IS REQUIRED. INSPECTION OF WATER-JET ALUMINUM DROP-OFF IS ACCEPTABLE TO VERIFY DIMENSIONS. AFTER THIS INITIAL COMPLETE INSPECTION, NO FORMAL DIMENSIONAL INSPECTION REPORT IS NECESSARY FOR THIS COMPONENT.

(30) THIS ITEM REQUIRES CERTIFICATES OF CONFORMANCE/COMPLIANCE (COC'S) ONLY.

(31) FINISH: PASSIVATE IAW AMS2700, METHOD 1, TYPE 2, CLASS 1.

(32) ORIENT ITEMS 6 SUCH THAT THE "SLITS" IN EACH PART ARE PERPENDICULAR TO EACH OTHER.

REVISIONS

REV	DESCRIPTION	DATE	APPROVAL
-	BASELINED IN ACCORDANCE WITH CA 1755.		
A	REVISED IN ACCORDANCE WITH DCN AND CA 2069.	5/4/05	V. TRAN D. HERFURTH
B	REVISED IN ACCORDANCE WITH DCN AND CA 2176.	1/9/13	R. BENZIO D. HERFURTH
C	REVISED IN ACCORDANCE WITH DCN AND CA 2185.	1/18/13	R. BENZIO D. HERFURTH
D	REVISED IN ACCORDANCE WITH DCN AND CA 2212.	5/9/13	R. BENZIO D. HERFURTH
E	REVISED IN ACCORDANCE WITH DCN AND CA 2345.	11/24/13	R. BENZIO D. HERFURTH
F	REVISED IAW CA 2404, A9SP-1304-XR002, AND ECO AAU-0004	04/19/14	DEM

PARTS LIST CONTINUED ON PAGES 3, 4 AND 5

PARTS LIST

QTY REQ'D PER ASSY						CAGE CODE	PART OR IDENTIFYING NO.	DESCRIPTION/NOMENCLATURE	MATERIAL SPECIFICATION	SHEET ZONE	ITEM NO.
					AR		LOCTITE 425	ADHESIVE	(30)(19)		19
					16		NAS1189E04P4J	#4-40 X .250 SELF-LOCK FH SCREW	A286 CRES (30)(28)	2 C3	10
					12		MS24693-C6	SCR,100 DEG FLTHD 4-40 X .500 LG	300 SERIES CRES (27)	2 D1	9
					2		102986-506	RING, CLAMP, VENT SCREEN	6061-T6/T651 AL, (.125) STK	2 C3	8
					2		102986-505	SCREEN, VENT, ASSY		2 D3	7
					2		102984-524	FLAP-1, PORT	.032 GRAY SILICONE RUBBER, A-A-59588, CLASS 2B, 50 DUR (30)(18)	2 C3	6
					1		102986-503	PANEL ASY, PORT		2 D4	5
					1		102986-502	CLAMP, FIXED PORT RING	6061-T6/T651 AL, (.125) STK	2 D1	4
					1		102986-501	FRAME ASY, FIXED PORT		2 D2	3
					[redacted]		102986-001	REAR PORT PANEL ASSY		2 A5	1

DRAWING REVISION

THIS DRAWING SUPERCEDES ALL PREVIOUS VERSIONS & REVISIONS

REVISION LETTER: F

DATE:

SIGNATURE: Don Morr — Digitally signed by Don Morr DN: cn=Don Morr, o=Engineering, ou=RE, email=donald.e.morr@nasa.gov, c=US Date: 2014.04.25 09:22:26 -07'00'

PRINTED COPIES OF THIS DRAWING ARE UNCONTROLLED. VERIFY THIS REVISION IS THE LATEST PRIOR TO FABRICATION/ASSEMBLY

NO.	NEXT ASSEMBLY
001	102983

APPLICATION

UNLESS OTHERWISE SPECIFIED ALL DIMENSIONS ARE IN INCHES. ALL DIMENSIONS AND TOLERANCES APPLY AFTER SURFACE TREATMENT.

TOLERANCE UNLESS OTHERWISE SPECIFIED: FRACTIONAL ± /; .X ± 0.1; .XX ± 0.01; .XXX ± 0.005; ANGULAR ± 0.5

DRILLED HOLE TOLERANCES: DIAMETER .000-.125 +.005-.001; .126-.500 +.010-.002; .501-1.000 +.015-.002; 1.001-2.000 +.030-.003; OVER 2.000 +.060-.005

DIAMETER ON SAME AXIS TOTAL RUN OUT .005

BREAK SHARP CORNERS .01 MAX

ALL MACHINED SURFACES TO BE 32✓

DO NOT SCALE DRAWING

PRELIMINARY RELEASE	DATE	DRAWN L. ANDO	DATE 8/31/01
INITIAL RELEASE	DATE	CHECKED D. HERFURTH	DATE
LATEST REVISION	DATE	DESIGNED	DATE
PROJECT ENG V. VYKUKAL	DATE	STRESS	DATE
APPROVED V. VYKUKAL	DATE	MATERIAL	DATE
REQUESTOR	DATE	Q.A. R. JUNNILA	DATE

Ames Research Center
Moffett Field, California 94035-1000

REAR PORT PANEL ASSY

ANIMAL ACCESS UNIT

SIZE D | CAGE CODE 25307 | A 102986 | REV F

SCALE 1.000 | INDEX DATE | SHEET 1 OF 5

PRO/E DRAWING FILE NAME: 102986 | WC REV: pfd_wm_version

MODEL NAME: 102986-001_DRAWING REV: ptc_wm_xf_model TYPE: ASSEM DB: ptc_wm_location
NASABORDER 07/2006

FAB ESTIMATE: | LATEST REV: | INITIAL REL: | PRELIM REL:

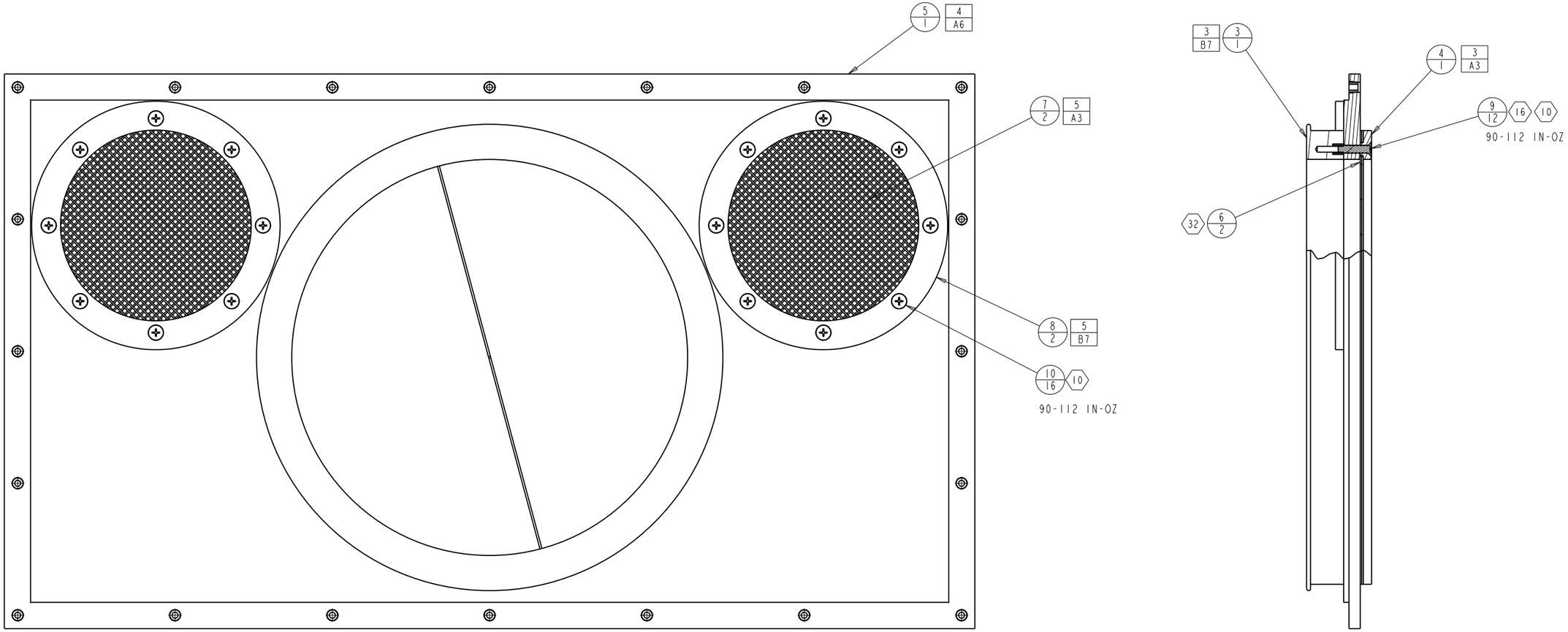

1 REAR PORT PANEL ASSY 26

SCALE 1.250

DRAWING REVISION

THIS DRAWING SUPERCEDES ALL PREVIOUS VERSIONS & REVISIONS

REVISION LETTER: F

DATE:

SIGNATURE: Don Morr

Digitally signed by Don Morr
DN: cn=Don Morr, o=Engineering, ou=RE, email=donald.e.morr@nasa.gov, c=US
Date: 2014.04.25 09:22:38 -07'00'

PRINTED COPIES OF THIS DRAWING ARE UNCONTROLLED. VERIFY THIS REVISION IS THE LATEST PRIOR TO FABRICATION/ASSEMBLY

SEE SHEET ONE FOR REVISIONS

SIZE	CAGE CODE		REV
D	25307	A 102986	F
SCALE 1.000		INDEX DATE / SHEET 2 OF 5	

PRO/E DRAWING FILE NAME: 102986 | WC REV: ptc_wm_version

MODEL NAME: 102986-001_DRAWING | REV: ptc_wm_rev | MODEL TYPE: ASSEM | DB: ptc_wm_location | PRELIM REL: | INITIAL REL: | LATEST REV: | FAB ESTIMATE:

NASABORDER 02/2007

DRAWING NUMBER	SHEET	REV
A 102986	3	F

DRAWING REVISION

THIS DRAWING SUPERCEDES ALL PREVIOUS VERSIONS & REVISIONS

REVISION LETTER: F

DATE:

SIGNATURE: Don Morr

Digitally signed by Don Morr
DN: cn=Don Morr, o=Engineering, ou=RE, email=donald.e.morr@nasa.gov, c=US
Date: 2014.04.25 09:22:58 -07'00'

PRINTED COPIES OF THIS DRAWING ARE UNCONTROLLED. VERIFY THIS REVISION IS THE LATEST PRIOR TO FABRICATION/ASSEMBLY

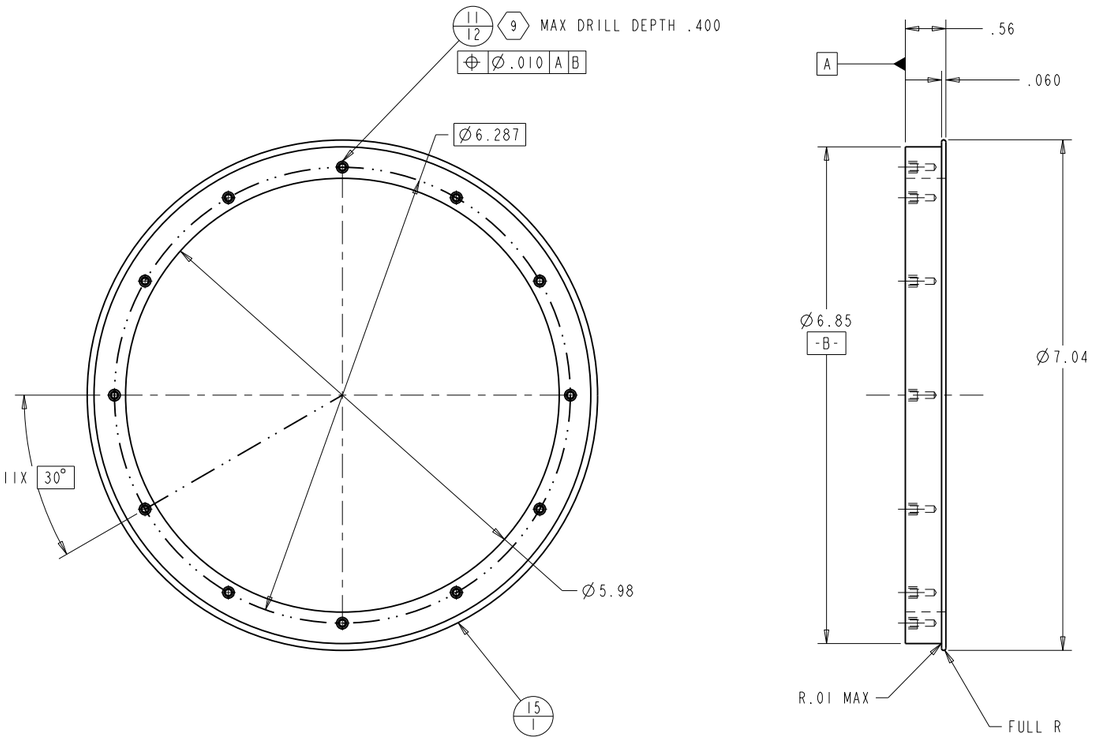

3 FRAME ASY, FIXED PORT 12 13 25 2/D2

SCALE 1.000

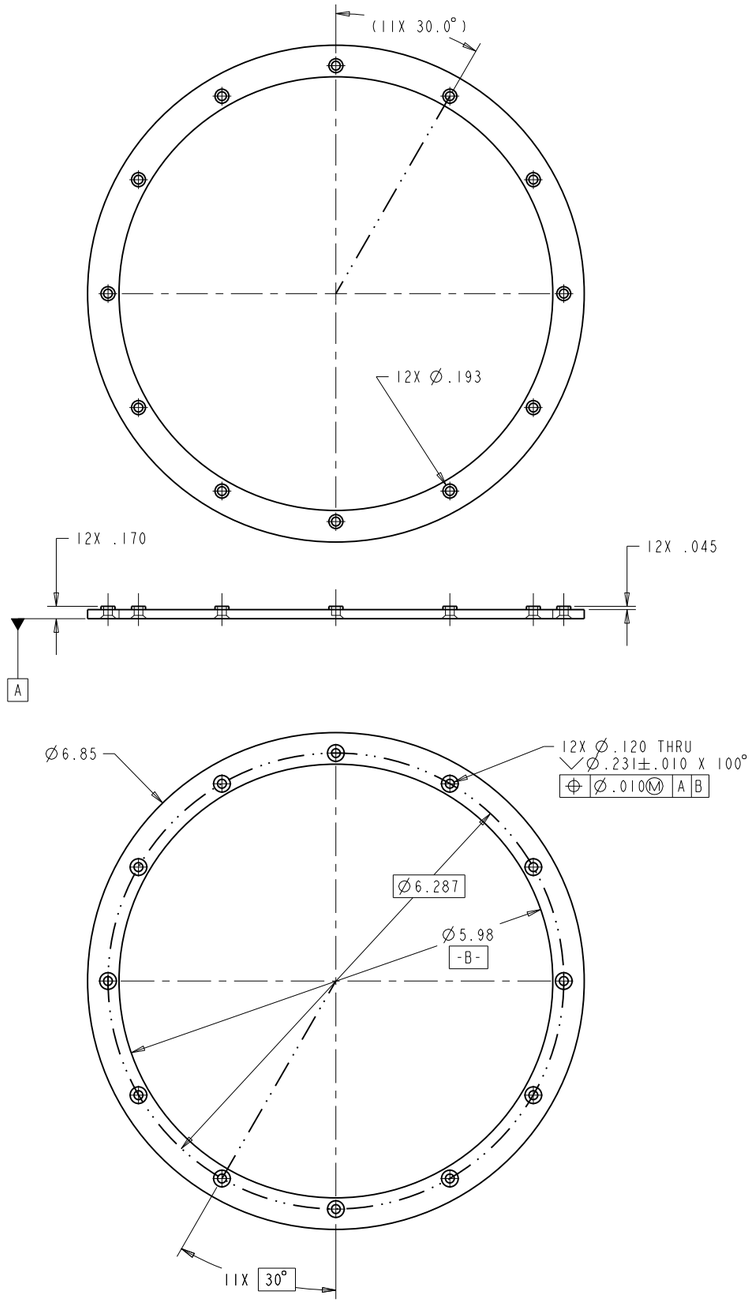

4 CLAMP, FIXED PORT RING 12 13 25 2/D1

SCALE 1.000

QTY REQ'D PER ASSY	CAGE CODE	PART OR IDENTIFYING NO.	DESCRIPTION/NOMENCLATURE	MATERIAL SPECIFICATION	SHEET ZONE	ITEM NO.
1		102986-508	PLATE	6061-T6/T651 ALUMINUM	3 B6	15
12		MS21209C0415	#4-40 X .168" LOCKING HELICOIL	CRES 30	3 D7	11
[redacted]		102986-501	FRAME ASY, FIXED PORT		3 B7	3
501						

PARTS LIST

SEE SHEET ONE FOR REVISIONS

SIZE	CAGE CODE		REV
D	25307	A 102986	F
SCALE 1.000		INDEX DATE / SHEET 3 OF 5	

PRO/E DRAWING FILE NAME: 102986 WC REV: ptc_wm_version

MODEL NAME: 102986-001_DRAWING REV: ptc_wm_version MODEL TYPE: ASSEM DB: ptc_wm_location
NASABORDER 02/2007

FAB ESTIMATE: LATEST REV: INITIAL REL: PRELIM REL:

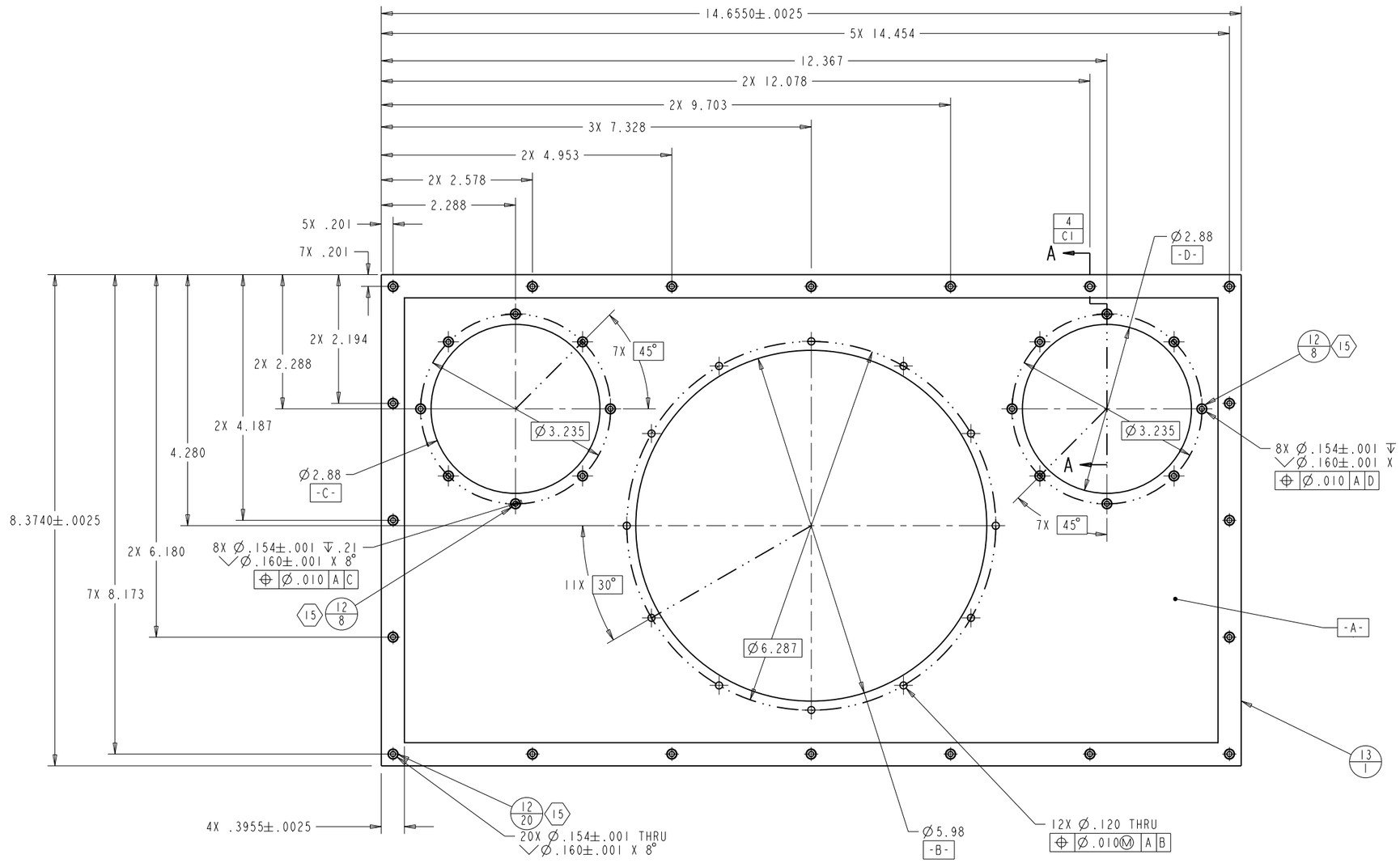

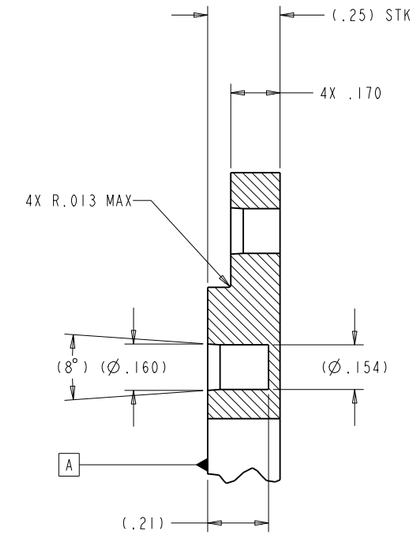

SECTION A-A 4 D4
SCALE 4.000

5 PANEL ASY, PORT 14 25 2 D4

SCALE 1.000

DRAWING REVISION

THIS DRAWING SUPERCEDES ALL PREVIOUS VERSIONS & REVISIONS

REVISION LETTER: F

DATE:

SIGNATURE: Don Morr

Digitally signed by Don Morr
DN: cn=Don Morr, o=Engineering, ou=RE, email=donald.e.morr@nasa.gov, c=US
Date: 2014.04.25 09:23:10 -07'00'

PRINTED COPIES OF THIS DRAWING ARE UNCONTROLLED. VERIFY THIS REVISION IS THE LATEST PRIOR TO FABRICATION/ASSEMBLY

QTY REQ'D PER ASSY	CAGE CODE	PART OR IDENTIFYING NO.	DESCRIPTION/NOMENCLATURE	MATERIAL SPECIFICATION	SHEET ZONE	ITEM NO.
1		102986-507	PLATE	CLEAR LEXAN, P/N 9034 (30)(20)	4 B3	13
36		440X135HSS	#4-40 THREADED INSERT	STAINLESS STEEL (30)(17)	4 B6	12
[redacted]		102986-503	PANEL ASY, PORT		4 A6	5
503						

PARTS LIST

SEE SHEET ONE FOR REVISIONS

SIZE	CAGE CODE		REV
D	25307	A 102986	F
SCALE 1.000		INDEX DATE / SHEET 4 OF 5	

PRO/E DRAWING FILE NAME: 102986 ptc_wm_version | WC REV:

MODEL NAME: 102986-001_DRAWING | REV: ptc_wm_version | MODEL TYPE: ASSEM | DB: ptc_wm_location | LATEST REV: | INITIAL REL: | PRELIM REL: | FAB ESTIMATE:

NASABORDER 02/2007

PRINTED COPIES OF THIS DRAWING ARE UNCONTROLLED. VERIFY THIS REVISION IS THE LATEST PRIOR TO FABRICATION/ASSEMBLY

DRAWING REVISION

THIS DRAWING SUPERCEDES ALL PREVIOUS VERSIONS & REVISIONS

REVISION LETTER: F
DATE:
SIGNATURE: Don Morr

Digitally signed by Don Morr
DN: cn=Don Morr, o=Engineering, ou=RE, email=donald.e.morr@nasa.gov, c=US
Date: 2014.04.25 09:23:22 -07'00'

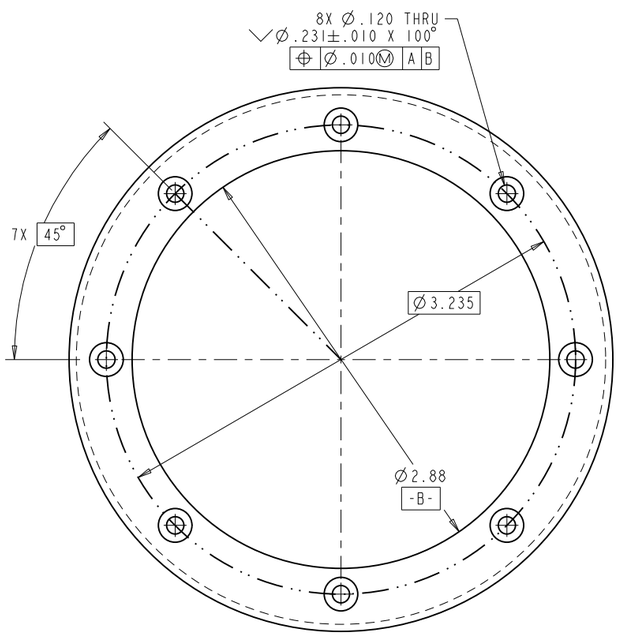

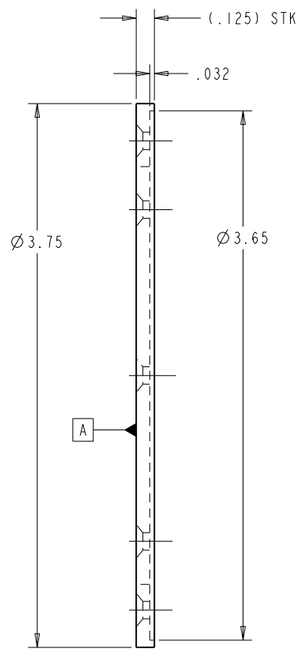

SCALE 2.000

(8) RING, CLAMP, VENT SCREEN ⟨12⟩ ⟨25⟩ 2/C3

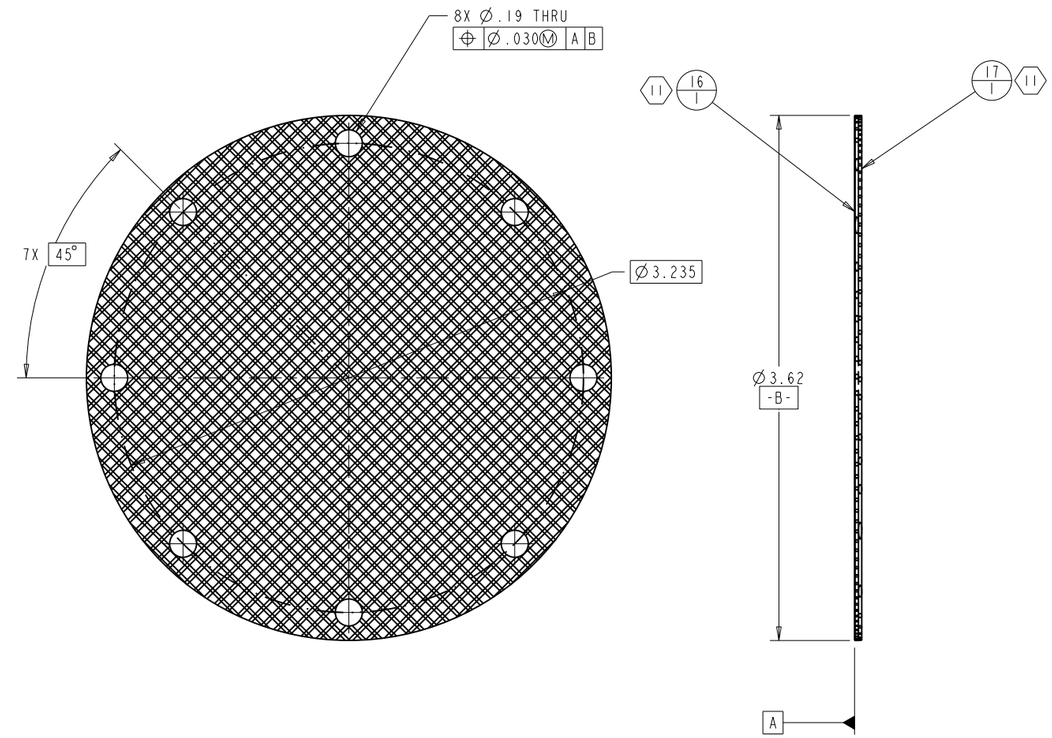

(7) SCREEN, VENT, ASSY ⟨25⟩ ⟨31⟩ 2/D3

SCALE 2.000

QTY REQ'D PER ASSY					CAGE CODE	PART OR IDENTIFYING NO.	DESCRIPTION/NOMENCLATURE	MATERIAL SPECIFICATION	SHEET/ZONE	ITEM NO.
				1		102986-510	SQ MESH WIRE CLOTH, 12 MESH,.023 DIA WIRE	304 CRES CALENDERED ⟨21⟩	5/C1	17
				1		102986-509	135 MESH BOLTING CLOTH, .0023" DIA	304 CRES ⟨21⟩	5/C2	16
						102986-505	SCREEN, VENT, ASSY		5/A3	7
				505						

PARTS LIST

SEE SHEET ONE FOR REVISIONS

SIZE	CAGE CODE		REV
D	25307	A 102986	F
SCALE 1.000		INDEX DATE / SHEET 5 OF 5	

PRO/E DRAWING FILE NAME: 102986 | WC REV: ptc_wm_version

MODEL NAME: 102986-001_DRAWING
NASABORDER 02/2007
REV: ptc_wm_rf MODEL TYPE: ASSEM DB: ptc_wm_location
LATEST REV: INITIAL REL: PRELIM REL: FAB ESTIMATE:

STOCK DISPOSITION:	OK		ECO # AAU-0004

STOCK DISPOSITION DEFINITIONS:

SCRAP:	*CHANGES ARE NOT COMPATIBLE WITH FIT, FORM & FUNCTION OF THE PREVIOUS REVISIONS. PREVIOUS REVISIONS MUST BE DESTROYED OR IDENTIFIED, SEGREGATED AND QUANANTINED FROM ACTIVE INVENTORY.*
REWORK:	*PREVIOUS REVISIONS WILL BE MODIFIED TO MATCH THIS REVISION UNLESS IT IS MORE COST EFFECTIVE TO SCRAP PARTS.*
OK:	*THIS REVISION IS COMPATIBLE AND INTERCHANGEABLE WITH THE PREVIOUS REVISION.*

DRAWING CLASS CHANGE 2

NASA-Ames Research Center ENGINEERING CHANGE ORDER			PROJECT: AAU		DWG OR DOC NO. 102986	REV F
PREP BY: D. MORR	CHECK DATE 4/24/14	PROJ MGR DATE 4/23/14	CUST REP DATE 24 April 2014	DATE	DWG OR DOC TITLE REAR PORT PANEL ASSY	CAD YES [X] NO [ ]
PHONE: 4-0645	MFG DATE 4/23/14	R&QA DATE 4/23/14	ANALYSIS DATE 4/24/14	DATE	NEXT ASSY NO. 102983	
M/S: 213-15 DATE: 04/07/14	RESPONSIBLE ENG DATE: 4-19-2014	D. MORR PHONE: 4-0645	OTHER DWG OR DOC AFFECTED:	NONE [X]	REASON FOR CHANGE PRO/E CONVERSION	

DRAWING NO.	REVISION WAS	REVISION IS	TITLE	DESCRIPTION OF CHANGE
102986	E	F	REAR PORT PANEL ASSY	REDRAWN TO PRO/E. SEE A9SP-1304-XR002 FOR GENERAL CHANGES. GENERAL: UPDATED NOTES, DIMENSIONS, & TOLERANCING SCHEME.