Marshall Space Flight Center
Specification for NASA 3.0" Swivel Eye Bracket

Specifications:

1. Quantity required:

Swivel Eye Bracket	Qty
3.0" Pin	18

2. Vendor shall fabricate 3.0" Pin Swivel Eye Brackets per NASA Drawing 90M11268-3 rev. D

3. Vendor shall install RBC Spherical Plain Radial Bearing PN B48-L. Bearings shall be cooled using dry ice per RBC recommendation before being pressed into bracket.

4. Vendor shall provide a Certificate of Compliance or a Verification Matrix to verify that all technical requirements for the procurement have been met, including all specifications in this document and the NASA 90M drawings.

5. Swivel Eye Brackets shall be fabricated using domestic material only.

6. Vendor shall provide a Certified Material Test Report (CMTR) for all material used to fabricate swivel eye brackets.

7. Vendor shall provide physical address of all manufacturing plants used to fabricate swivel eye brackets.

8. NASA shall perform Tensile Load Proof Test and Magnetic Particle Testing described in Note 5 for all swivel eye brackets, including those made from solid billet, at no cost to the vendor as part of final acceptance.

9. NASA proof test shall include Load vs. Deflection data points equally spaced at 10% increments, including zero and maximum nominal load value. All data shall be NIST Traceable.

10. Proof Test Data shall indicate no increase in deflection during 10 minute hold at 150% of Swivel Eye Bracket Full Scale Load to verify no yielding in the material. Any swivel eye bracket that fails the yield test will be rejected.

11. NASA shall perform Magnetic Particle Testing per Note 5 to inspect welds after proof test is complete. Any swivel eye bracket found to have cracks in the weld or any part of the material will be rejected.

12. NASA shall prepare and paint surfaces per Note 11 after proof test and final inspections have been performed.

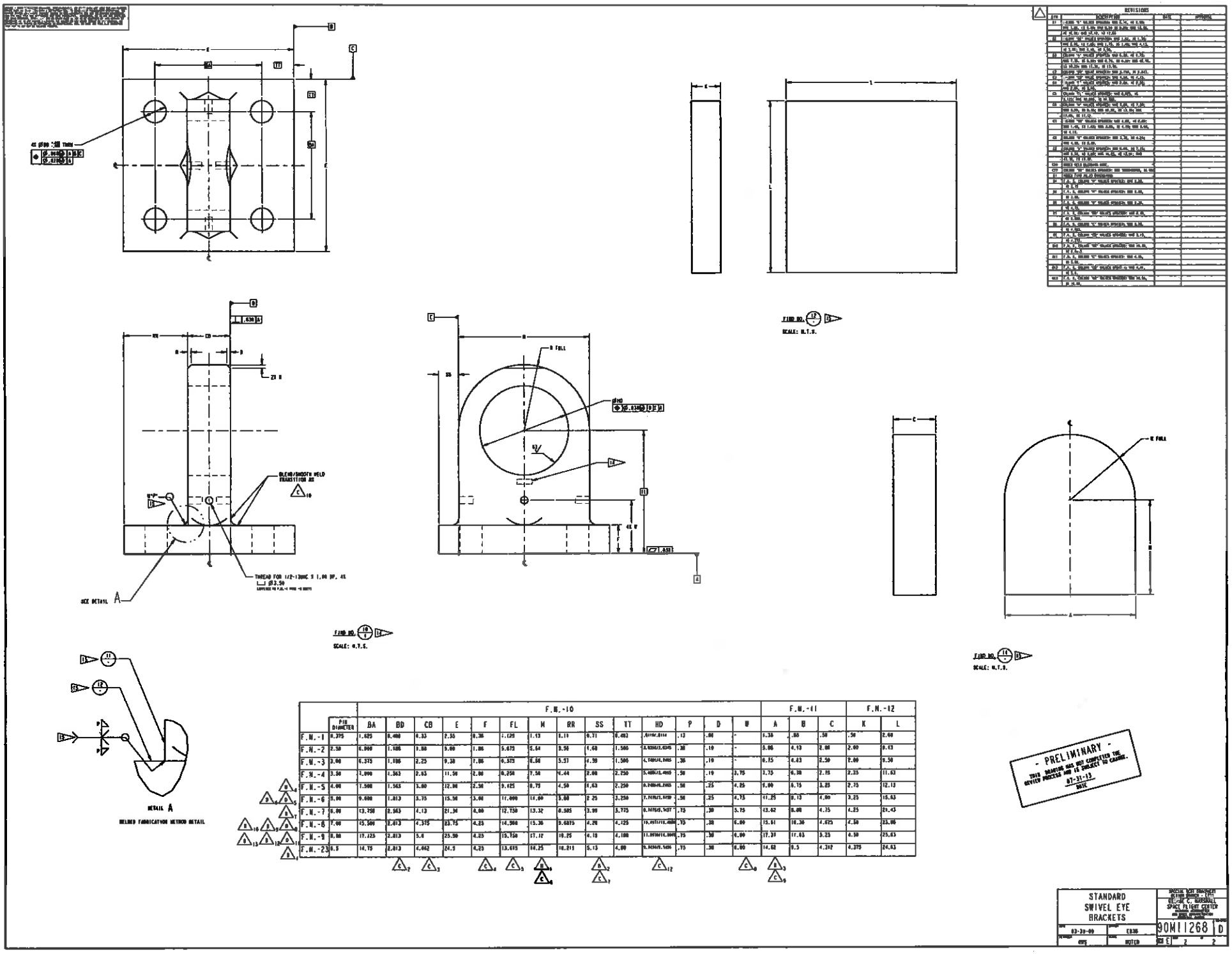

	PIN DIAMETER	F.N.-10 BA	BD	CB	E	F	FL	M	RR	SS	TT	HD	P	D	W	F.N.-11 A	B	C	F.N.-12 K	L
F.N.-1	0.375	1.625	0.400	0.33	2.35	0.36	1.125	1.13	0.19	0.31	0.483	.0100/.0114	.12	.08	-	1.38	.80	.50	.50	2.00
F.N.-2	2.50	6.000	1.186	0.86	9.00	1.06	5.675	5.64	0.50	1.60	1.586	0.8250/0.8345	.38	.10	-	5.06	4.13	2.00	2.00	8.13
F.N.-3	3.00	6.375	1.186	2.25	9.30	1.06	5.575	6.00	5.57	1.30	1.586	4.7480/4.8465	.38	.10	-	6.75	4.63	2.50	2.00	9.50
F.N.-4	3.50	7.000	1.563	2.63	11.50	2.00	6.250	7.50	4.44	2.00	2.250	5.4980/5.4965	.50	.10	3.75	7.75	6.38	2.75	2.25	11.63
F.N.-5	4.00	7.500	1.563	3.00	12.00	2.50	9.625	8.75	4.50	4.63	2.250	6.9980/6.9965	.50	.25	4.25	9.00	6.75	3.25	2.75	12.13
F.N.-6	5.00	9.000	1.813	3.75	15.50	3.00	11.000	11.00	5.00	2.25	3.250	7.9970/8.0000	.50	.25	4.75	11.25	8.13	4.00	3.25	15.63
F.N.-7	6.00	13.750	2.563	4.13	21.34	4.00	12.750	13.32	8.505	3.00	3.775	8.9970/9.0027	.75	.30	5.75	13.62	8.00	4.75	4.25	20.43
F.N.-8	7.00	15.500	2.813	4.375	23.75	4.25	14.900	15.36	9.6875	4.20	4.125	10.9970/11.0080	.75	.30	6.00	15.81	10.36	4.625	4.50	23.06
F.N.-9	8.00	17.125	2.813	5.0	25.50	4.25	15.750	17.12	10.25	4.10	4.188	11.9970/12.0095	.75	.30	6.00	17.37	11.63	5.25	4.50	25.63
F.N.-23	8.5	14.75	2.813	4.062	24.5	4.25	13.625	14.25	10.211	5.13	4.00	9.9960/9.9985	.75	.30	6.00	14.62	8.5	4.312	4.375	24.63

REVISIONS			
REV	DESCRIPTION	DATE	APPROVAL
A	REVISED NOTE 1	07-31-01	
B	ADDED NOTE 12		
C	REVISED NOTE 1	07-27-11	
D	REVISED NOTE 2	10-29-13	
E	REVISED NOTE 6 & 7	10-29-13	
[illegible]	[illegible]	--	
[illegible]	[illegible]	--	
[illegible]	[illegible]	--	
[illegible]	[illegible]	--	
[illegible]	REVISED NOTE 8	--	
[illegible]	REVISED NOTE 4	--	
[illegible]	REVISED SHEETS 1 & 2		
[illegible]	ADDED FIND NO. 22 & 23 PARTS		
[illegible]	ADDED FIND NO. 23 TO		
[illegible]	FIND NO. NOTE 12		
[illegible]	REVISED FIND NO. NOTE 3		
[illegible]	REVISED FIND NOTE		
[illegible]	REVISED FIND NOTE 11		
[illegible]	ADDED FIND NO. 21		
[illegible]	ADDED FIND NO. 20		

GENERAL NOTES UNLESS OTHERWISE SPECIFIED:

1. REMOVE ALL BURRS AND BREAK ALL SHARP EDGES.
2. 250/ ALL MACHINED SURFACES UNLESS OTHERWISE NOTED.
3. MATERIAL: 4130 OR 4340 AIRCRAFT QUALITY STEEL PLATE, BILLET, OR FORGING. PART MAY BE FABRICATED FROM WELDED PLATE OR MACHINED FROM BILLET OR FORGING PROVIDED THE FINISHED PART MEETS THE STRENGTH REQUIREMENT OF NOTE 14.
4. WELDS SHALL CONFORM TO NSFC-SPEC-3070, CLASS B.
5. BEFORE PAINTING, PROOF LOAD TO 150% OF TENSILE LOAD CAPACITY GIVEN IN NOTE 12 IF PART IS FABRICATED FROM WELDED PLATE. INSPECT WELDS USING MAGNETIC PARTICLE TESTING PER ASTM E 1444 AFTER PROOF LOAD TEST USING WELD INSPECTION CRITERIA SPECIFIED FOR A NSFC-SPEC-3070, CLASS B. WELD.
6. GEOMETRIC DIMENSIONING AND TOLERANCING PER ASME Y14.5M-1994.
7. STEEL STAMP PART NO. AND REVISION LETTER AT APPROXIMATE LOCATION INDICATED USING .25 HIGH CHARACTERS EXCEPT USE .13 HIGH CHARACTERS FOR F.N.-1.
8. STEEL STAMP "MAX. TENSION XXX,XXX LB" AND "MAX. COMP. XXX,XXX LB" AT APPROXIMATE LOCATION INDICATED USING .13 HIGH CHARACTERS EXCEPT USE .06 HIGH CHARACTERS FOR F.N.-1. LOAD CAPACITIES FOR EACH FIND NO. ARE GIVEN IN NOTE 12.
9. LIBERALLY APPLY TRIFLOW OR LUBRIED BRUSH OR EQUAL LUBRICANT TO THRU AND TAPPED HOLES TO PREVENT CORROSION.
10. COMPONENTS ARE NOT INTENDED FOR USE AS LIFTING OR HOISTING EQUIPMENT.
11. PREPARE PAINT SURFACES PER PAINT MANUFACTURERS RECOMMENDATION AND APPLY ASTM CLEAN ONEMC. NECESSARY. PRIME USING A POLYURETHANE ENAMEL TOP COAT (REFERENCE: SHERWIN WILLIAMS VOLANE F030) GLOSS RED NO. 21105 PER FEDERAL STANDARD 595B. DO NOT PAINT THRU HOLES OR THREADED HOLES OR SPHERICAL BEARING.
12. LOAD LIMITS FOR EACH SWIVEL EYE BRACKET ARE SHOWN BELOW. THE LOADS GIVEN REPRESENT THE MAXIMUM LOAD ALLOWED WHEN LOADED VERTICALLY AS SHOWN. VARIATION FROM THIS LOAD CASE WILL CAUSE A REDUCTION IN THE MAXIMUM LOAD ALLOWED.

FIND NUMBER	MAX. TENSILE LOAD (LB)	MAX. COMPRESSIVE LOAD (LB)	PIN SIZE (IN)	WEIGHT (LB)
-1	2,100	3,000	.38	1
-2	83,000	179,000	2.50	49
-3	122,000	185,000	3.00	70
-4	190,000	240,000	3.50	110
-5	300,000	340,000	4.00	170
-6	350,000	415,000	5.00	255
-7	575,000	765,000	6.00	465
-8	510,000	765,000	7.00	625
-9	710,000	943,000	8.00	1100
-23	535,000	765,000	8.50	870

13. INSTALL PER MANUFACTURER'S INSTRUCTIONS.
14. HEAT TREAT PER AMS-H-6875H TO 150-180 KSI TENSILE BEFORE FINAL MACHINING. NO TENSILE SPECIMEN REQUIRED. THE ULTIMATE TENSILE STRENGTH OF THE FINISHED PART SHALL BE BETWEEN 150 AND 180 KSI, WHETHER WELDED FROM PLATE OR MACHINED FROM BILLET OR FORGING. TO ENSURE THIS, THE FOLLOWING PROCEDURE WILL BE FOLLOWED:
    A. MACHINE DIMENSIONS "CB" AND "HD" TO WITHIN .10 ± .03 OF THEIR INDICATED FINISHED VALUES. MACHINE ALL OTHER DIMENSIONS TO THEIR INDICATED FINISHED VALUES.
    B. PERFORM A ROCKWELL SURFACE HARDNESS TEST IN THE AREAS INDICATED BY FLAG NOTE 14 ON THE NEAR AND FAR SIDES OF THE PART.
    C. IF THE INDICATED ULTIMATE TENSILE STRENGTH IS BETWEEN 150 AND 180 KSI, THEN MACHINE DIMENSIONS "CB" AND "HD" TO THEIR INDICATED FINISHED VALUES. PROCEED TO STEP F.
    D. IF THE INDICATED ULTIMATE TENSILE STRENGTH IS BELOW 150 KSI, THEN THE PART SHOULD BE RE-HEAT TREATED. AFTER HEAT TREATING, MACHINE DIMENSIONS "CB" AND "HD" TO THEIR INDICATED FINISHED VALUES. PROCEED TO STEP F.
    E. IF THE INDICATED ULTIMATE TENSILE STRENGTH IS ABOVE 180 KSI, THEN THE STRESS AND MATERIALS ORGANIZATIONS THAT SIGNED THE ORIGINAL DRAWING SHOULD BE CONTACTED TO OBTAIN ACCEPTANCE OF THE PART. MACHINE DIMENSIONS "CB" AND "HD" TO THEIR INDICATED FINISHED VALUES.
    F. PERFORM A FINAL ROCKWELL SURFACE HARDNESS TEST IN THE AREAS INDICATED BY FLAG NOTE 14 ON THE NEAR AND FAR SIDES OF THE PART. WRITTEN CERTIFICATION OF THIS HARDNESS AND THE CALCULATED STRENGTH SHALL BE PROVIDED FOR EACH PART PRODUCED.
15. F.N.S -11 AND -12 ARE REQUIRED IF PART IS WELDED FROM PLATE. IF WELDED, THEN WELD NOTE 4 AND WELD CALLOUT ON F.N.-10 ARE APPLICABLE. IF MACHINED FROM BILLET OR FORGING, THEN RADIUS CALLOUT ON F.N.-10 IS APPLICABLE.

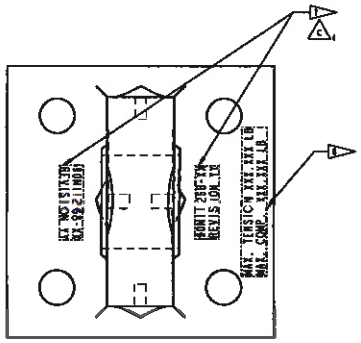

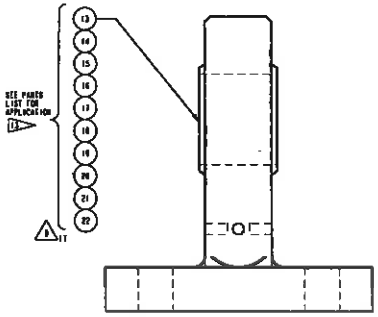

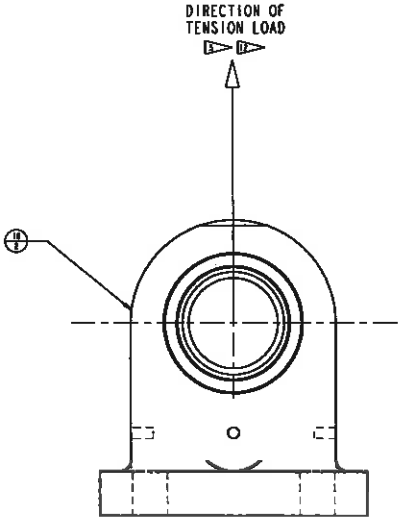

FIND NO. 1 THRU 9 AND 22 A

SCALE: N.T.S.

SUGGESTED VENDOR SOURCES:

1. JOSEPH T. RYERSON & SON OR EQUAL
   BOX 24266
   CHATTANOOGA, TN 37422
   (423) 698-3500
2. APPLIED INDUSTRIAL TECHNOLOGY OR EQUAL
   2400 S. WILLOW ST.
   SCOTTSBORO, AL
   (256) 259-1445
3. AURORA BEARING COMPANY OR EQUAL
   810 SOUTH LAKE ST.
   AURORA, IL 60506
   (708) 859-2030

- PRELIMINARY -
THIS DRAWING HAS NOT COMPLETED THE REVIEW PROCESS AND IS SUBJECT TO CHANGE.
07-31-13
DATE

FIND NO.	SHEET NO.	1	2	3	4	5	6	7	8	9	10	23	REV LETTER	PART NO.	DESCRIPTION	YEAR NO.	REMARKS
23	1												-	A	90M11268-23	SWIVEL EYE BRACKET, 8.50 PIN SIZE		
22	1											1	1	P	90M11268-22	SPHERICAL PLAIN RADIAL BEARING, 6.50 BORE	2	P.N. BH64-9L (RBC)
21	1									1			1	P	90M11268-21	SPHERICAL PLAIN RADIAL BEARING, 8.00 BORE	2	P.N. BH28-9L (RBC)
20	1							1					1	P	90M11268-20	SPHERICAL PLAIN RADIAL BEARING, 7.00 BORE	2	P.N. BH12-9L (RBC)
19	1						1						1	P	90M11268-19	SPHERICAL PLAIN RADIAL BEARING, 6.00 BORE	2	P.N. BH8-9L (RBC)
18	1					1							1	P	90M11268-18	SPHERICAL PLAIN RADIAL BEARING, 5.00 BORE	2	P.N. BH6-9L (RBC)
17	1				1								1	P	90M11268-17	SPHERICAL PLAIN RADIAL BEARING, 4.00 BORE	2	P.N. BH4-9L (RBC)
16	1			1									1	P	90M11268-16	SPHERICAL PLAIN RADIAL BEARING, 3.50 BORE	2	P.N. BH4-9L (RBC)
15	1												1	P	90M11268-15	SPHERICAL PLAIN RADIAL BEARING, 3.00 BORE	2	P.N. BH3-9L (RBC)
14	1		1										1	P	90M11268-14	SPHERICAL PLAIN RADIAL BEARING, 2.50 BORE	2	P.N. BH2-9L (RBC)
13	1	1											1	P	90M11268-13	SPHERICAL PLAIN RADIAL BEARING, .375 BORE	3	P.N.COM-8 (AURORA)
12	2										1		1	F	90M11268-12	BRACKET BASE PLATE	1	MAT'L PER NOTE 3, SEE NOTE 15
11	2										1		1	F	90M11268-11	BRACKET TABS	1	MAT'L PER NOTE 3, SEE NOTE 15
10	1, 2	1	1	1	1	1	1	1	1	1	1	1	1	A	90M11268-10	BRACKET	1	MAT'L PER NOTE 3
9	1								1				-	A	90M11268-9	SWIVEL EYE BRACKET, 8.50 PIN SIZE		
8	1												-	A	90M11268-8	SWIVEL EYE BRACKET, 7.00 PIN SIZE		
7	1												-	A	90M11268-7	SWIVEL EYE BRACKET, 6.00 PIN SIZE		
6	1												-	A	90M11268-6	SWIVEL EYE BRACKET, 5.00 PIN SIZE		
5	1												-	A	90M11268-5	SWIVEL EYE BRACKET, 4.00 PIN SIZE		
4	1												-	A	90M11268-4	SWIVEL EYE BRACKET, 3.50 PIN SIZE		
3	1												-	A	90M11268-3	SWIVEL EYE BRACKET, 3.00 PIN SIZE		
2	1												-	A	90M11268-2	SWIVEL EYE BRACKET, 2.50 PIN SIZE		
1	1												-	A	90M11268-1	SWIVEL EYE BRACKET, .375 PIN SIZE		
FIND NO.	SHEET NO.	NO. REQD PER FIND NO. F.N. 1	NO. REQD PER FIND NO. F.N. 2	NO. REQD PER FIND NO. F.N. 3	NO. REQD PER FIND NO. F.N. 4	NO. REQD PER FIND NO. F.N. 5	NO. REQD PER FIND NO. F.N. 6	NO. REQD PER FIND NO. F.N. 7	NO. REQD PER FIND NO. F.N. 8	NO. REQD PER FIND NO. F.N. 9	NO. REQD PER FIND NO. F.N. 10	NO. REQD PER FIND NO. F.N. 23	REV LETTER	PART NO.	DESCRIPTION	YEAR NO.	REMARKS

A=ASSEMBLY/SUB-ASSEMBLY/INSTALLATION E=EXISTING ITEM/FACILITY F=FABRICATED ITEM M=MODIFIED ITEM P=PURCHASED ITEM

VIC RICHARD	4-12-00		
W.D. HAMILTON	4-12-00	RACEY WILBANKS	4-12-00
ALVIS EIDSON	4-12-00	MARK SHERRY	4-12-00
		SCOTT MCCLURKEY	4-12-00
		PAUL B HINARD	4-12-00
		SCOTT MCCLURKEY	4-13-00

UNLESS OTHERWISE SPECIFIED TOLERANCES ARE
FRACTIONS ± 1/16 ± 1/64
DECIMALS .X ± .06 .XX ± .03 .XXX ± .015 .XXXX ± .010 ∠ ± .5°

DIMENSIONS ARE IN INCHES. DO NOT SCALE DRAWING

STANDARD SWIVEL EYE BRACKETS

DWG.	03-30-00	EO30	
PSK		NOTED	

90M11268 D

SHEET 1 OF 2