ENGINEERING ORDER

1. Engineering Order No. (Prefix followed by Dwg. No)
EO-1-79K39602

2. Sheet 1 of 22 Sheets

3. Effectivity (Facility & Vehicle)
LC39B

4. Disposition of Old Parts (Check one)
☐ Scrap ☐ Rework ☐ Use ☒ Not Applicable

5. Title of Drawing
KSC Launch Pad 39B, Environmental Control System (ECS) Refurbishment

6. Reason for Change
Additional 60Hz Power Modifications

7. Description of Change

DOCUMENT INFORMATION: (TITLE, NUMBER, REV, DATE)

LC-39B Environmental Control System (ECS) Refurbishment, PCN 98898, EO001-79K39602, April 9, 2014

SENSITIVE BUT UNCLASSIFIED (SBU)

INSTRUCTIONS: This item must be reviewed under the requirements for "Sensitive But Unclassified Information" as described in NPR 1600.1, Chapter 6.

http://inside-dms.ofis.nasa.gov

	Yes	No	SBU Reviewer's Signature	Date	Company / Org
Document contains SBU?	☐	☒	Phil Bennardo	4/10/14	NASA/TA-B3B

EXPORT CONTROL (EC)

INSTRUCTIONS: Attach the document requiring an export determination. Contact the KSC ECO Help Desk (867-9209) for help in completing this form.

http://exportcontrol.ksc.nasa.gov/

Contractor EC Reviewer's Name and Organization	Contractor EC Reviewer's Signature	Date

NASA ECO Reviewer's Name and Organization	NASA ECO Reviewer's Signature	Date
P. Bennardo TA-B3B	P. Bennardo	4/22/14

	EXPORT DETERMINATION (Check one box only)	
EAR 99	☒ NLR	The information contained in the document is technical in content, but is not technical data as defined by the ITAR or the EAR, and therefore is EAR 99 NLR (no export license required). (General Prohibit in Sik (Embargo) applies to all items subject to the EAR. (e.g., items on the SCL and items EAR 99 NLR. You may not make an export or re-export contrary to the provisions of part 746 (Embargos and Other Special Controls) of the EAR and 22 CFR part 126.1 of the ITAR.)
EAR Controlled	☐	This document is subject to the jurisdiction of the Export Administration Regulations (EAR) 15 CFR 730-774, and is export controlled. It may not be transferred to foreign nationals in the U.S. or abroad without specific approval of a knowledgeable NASA export control official, and/or unless an export license or license exception is obtained/available from the Bureau of Industry and Security, United States Department of Commerce. Violations of these regulations are punishable by fine, imprisonment, or both.
ITAR Controlled	☐	This document contains information which falls under the purview of the U.S. Munitions List (USML) as defined in the International Traffic in Arms Regulations (ITAR), 22 CFR 120-130, and is export controlled. It may not be transferred to foreign nationals, in the U.S. or abroad, without specific approval of a knowledgeable NASA export control official, and/or unless an export license or license exception is obtained/available from the United States Department of State. Violations of these regulations are punishable by fine, imprisonment, or both.

KSC FORM 7-457-2 NS (REV. 09/11) PREVIOUS EDITIONS ARE OBSOLETE

Changes include, but not limited to, replacement of the motor control centers (MCC), connections to switchgear, re-configuration of heaters and other control components. Drawing sheets modified are V-002, M-045, M-046, E-004, E-005, E-006, E-007, E-008, E-009, E-010, E-011, E-012, E-013, E-014, E-015, E-016, E-017, E-018, E-019, E-020, and I-095.

ACTION	QTY	FIND NO.	MFR. CODE	PART NO.	DESCRIPTION	STOCK SIZE	MATERIAL SPEC

PARTS LIST

8. SIGNATURES

Requester	Date	Draftsman	Date
Stress	Date	Engineer For Scott Hunt	Date 4/10/14
Checker	Date	Approved By Phil Bennardo	Date 4/10/14

KSC FORM 21-34 NS (REV. 02/04) PREVIOUS EDITIONS MAY BE USED

GENERAL

DWGNUM	SHEET	REV	Status	ISSUED DATE	TITLE
V-001	1 OF 187		FINAL	3/7/2014	COVER SHEET
V-002	2 OF 187		FINAL	4/1/2014	DRAWING LIST
V-003	3 OF 187		FINAL	3/7/2014	MECHANICAL INSTALLATION HAZARDOUS MATERIALS SCHEDULE
V-004	4 OF 187		FINAL	3/7/2014	MECHANICAL INSTALLATION HAZARDOUS MATERIALS LOCATIONS

PROCESS

DWGNUM	SHEET	REV	Status	ISSUED DATE	TITLE
M-001	5 OF 187		FINAL	3/7/2014	MECHANICAL SYMBOLS & ABBREVIATIONS
M-002	6 OF 187		FINAL	3/7/2014	MECHANICAL GENERAL NOTES
M-003	7 OF 187		FINAL	3/7/2014	ECS SYSTEM PURGE AIR SCHEMATIC DEMOLITION
M-004	8 OF 187		FINAL	3/7/2014	ECS SYSTEM PURGE AIR PLAN VIEW DEMOLITION
M-005	9 OF 187		FINAL	3/7/2014	ECS SYSTEM PURGE AIR ELEVATION DEMOLITION
M-006			FINAL	3/7/2014	NOT USED
M-007	10 OF 187		FINAL	3/7/2014	ECS SYSTEM PURGE AIR SCHEMATIC
M-008	11 OF 187		FINAL	3/7/2014	ECS SYSTEM PURGE AIR SCHEMATIC CONTINUED
M-009	12 OF 187		FINAL	3/7/2014	ECS SYSTEM PURGE AIR SCHEMATIC CONTINUED
M-010	13 OF 187		FINAL	3/7/2014	ECS SYSTEM PURGE AIR SCHEMATIC CONTINUED
M-011	14 OF 187		FINAL	3/7/2014	ECS SYSTEM PURGE AIR EQUIPMENT SCHEDULE
M-012	14 OF 187		FINAL	3/7/2014	ECS SYSTEM PURGE AIR EQUIPMENT SCHEDULE
M-013	16 OF 187		FINAL	3/7/2014	ECS SYSTEM PURGE AIR EQUIPMENT SCHEDULE CONTINUED
M-014	17 OF 187		FINAL	3/7/2014	ECS SYSTEM PURGE AIR EQUIPMENT SCHEDULE CONTINUED
M-015	18 OF 187		FINAL	3/7/2014	ECS SYSTEM PURGE AIR PLAN VIEW
M-016	19 OF 187		FINAL	3/7/2014	ECS SYSTEM PURGE AIR HORIZONTAL TUNNEL ELEVATION
M-017	20 OF 187		FINAL	3/7/2014	ECS SYSTEM PURGE AIR VERTICAL TUNNEL ELEVATION
M-018	21 OF 187		FINAL	3/7/2014	ECS SYSTEM PURGE AIR STUB TOWER ELEVATION
M-019	22 OF 187		FINAL	3/7/2014	ECS SYSTEM PURGE AIR STUB TOWER SECTIONS
M-020	23 OF 187		FINAL	3/7/2014	ECS SYSTEM PURGE AIR STUB TOWER SECTIONS CONTINUED
M-021	24 OF 187		FINAL	3/7/2014	ECS SYSTEM PURGE AIR SECTIONS, DETAILS AND ISOMETRIC
M-022	25 OF 187		FINAL	3/7/2014	ECS SYSTEM PURGE AIR SECTIONS, DETAILS AND ISOMETRIC CONTINUED
M-023	26 OF 187		FINAL	3/7/2014	ECS SYSTEM PURGE AIR SECTIONS, DETAILS AND ISOMETRIC CONTINUED
M-024	27 OF 187		FINAL	3/7/2014	ECS SYSTEM PURGE AIR SECTIONS, DETAILS AND ISOMETRIC CONTINUED
M-025	28 OF 187		FINAL	3/7/2014	ECS SYSTEM PURGE AIR SECTIONS, DETAILS AND ISOMETRIC CONTINUED
M-026	29 OF 187		FINAL	3/7/2014	COOLING TOWER PIPING PLAN VIEW DEMOLITION
M-027	30 OF 187		FINAL	3/7/2014	ECS ROOM PIPING LAYOUT DEMOLITION
M-028	31 OF 187		FINAL	3/7/2014	CONDENSER WATER AND WATER GLYCOL P&ID
M-029	32 OF 187		FINAL	3/7/2014	CONDENSER WATER AND WATER GLYCOL P&ID CONTINUED
M-030	33 OF 187		FINAL	3/7/2014	CONDENSER WATER AND WATER GLYCOL P&ID CONTINUED
M-031	34 OF 187		FINAL	3/7/2014	CONDENSER WATER AND WATER GLYCOL EQUIPMENT SCHEDULE
M-032	35 OF 187		FINAL	3/7/2014	CONDENSER WATER AND WATER GLYCOL EQUIPMENT SCHEDULE CONTINUED
M-033	36 OF 187		FINAL	3/7/2014	CONDENSER WATER AND WATER GLYCOL EQUIPMENT SCHEDULE CONTINUED
M-034	37 OF 187		FINAL	3/7/2014	COOLING TOWER PLAN VIEW
M-035	38 OF 187		FINAL	3/7/2014	ECS ROOM PIPING PLAN VIEW
M-036	39 OF 187		FINAL	3/7/2014	ECS ROOM PIPING SECTIONS, DETAILS AND ISOMETRIC
M-037	40 OF 187		FINAL	3/7/2014	ECS ROOM PIPING SECTIONS, DETAILS AND ISOMETRIC CONTINUED
M-038	41 OF 187		FINAL	3/7/2014	BOILER AND STEAM PIPING – DEMOLITION
M-039	42 OF 187		FINAL	3/7/2014	BOILER AND STEAM SCHEMATIC
M-040	43 OF 187		FINAL	3/7/2014	BOILER AND STEAM SCHEMATIC CONTINUED
M-041	44 OF 187		FINAL	3/7/2014	BOILER AND STEAM EQUIPMENT SCHEDULE
M-042	45 OF 187		FINAL	3/7/2014	BOILER AND STEAM PLAN VIEW AND SECTIONS AND DETAILS
M-043	46 OF 187		FINAL	3/7/2014	GN2 PRESSURE REDUCING STATION AND PIPING DEMOLITION
M-044	47 OF 187		FINAL	3/7/2014	GN2 PRESSURE REDUCING STATION PLAN VIEW AND SECTIONS AND DETAILS
M-045	48 OF 187		FINAL	4/9/2014	MECHANICAL INSTALLATION EQUIPMENT SCHEDULES
M-046	49 OF 187		FINAL	4/1/2014	MECHANICAL INSTALLATION EQUIPMENT SCHEDULES CONTINUED
M-047	50 OF 187		FINAL	3/7/2014	MECHANICAL INSTALLATION TYPICAL PIPING SUPPORT DETAILS
M-048	51 OF 187		FINAL	3/7/2014	ECS SYSTEM PURGE AIR DUCTING MODIFICATION PLAN VIEW
M-049	52 OF 187		FINAL	3/7/2014	ECS SYSTEM PURGE AIR DUCTING MODIFICATION ELEVATION VIEW

FIRE PROTECTION

DWGNUM	SHEET	REV	Status	ISSUED DATE	TITLE
FP-001	53 OF 187		FINAL	3/7/2014	ECS ROOM FIRE PROTECTION DEMOLITION
FP-002	54 OF 187		FINAL	3/7/2014	ECS ROOM FIRE PROTECTION

STRUCTURAL

DWGNUM	SHEET	REV	Status	ISSUED DATE	TITLE
S-001	77 OF 187		FINAL	3/7/2014	ECS SYSTEM STUB TOWER MODIFICATION STRUCTURAL GENERAL NOTES
S-002	78 OF 187		FINAL	3/7/2014	ECS SYSTEM STUB TOWER MODIFICATION ELEVATION VIEWS
S-003	79 OF 187		FINAL	3/7/2014	ECS SYSTEM STUB TOWER MODIFICATION SECTION AND DETAILS
S-004	80 OF 187		FINAL	3/7/2014	ECS SYSTEM STUB TOWER MODIFICATION ROOF PLAN EL 95'-1"
S-005	81 OF 187		FINAL	3/7/2014	ECS SYSTEM STUB TOWER MODIFICATION PLAN EL 92'-6"
S-006	82 OF 187		FINAL	3/7/2014	ECS SYSTEM BLOWER FOUNDATION DETAILS
S-007	83 OF 187		FINAL	3/7/2014	ECS SYSTEM ECS ROOM WALL PENETRATION PATCH

ELECTRICAL

DWGNUM	SHEET	REV	Status	ISSUED DATE	TITLE
E-001	55 OF 187		FINAL	3/7/2014	ELECTRICAL SYMBOLS, NOTES & ABBREVIATIONS
E-002	56 OF 187		FINAL	3/7/2014	SINGLE LINE DIAGRAM SWGR-A, MCC-A, AND PANEL ECS DEMOLITION
E-003	57 OF 187		FINAL	3/7/2014	SINGLE LINE DIAGRAM SWGR-B AND MCC-B DEMOLITION
E-004	58 OF 187		FINAL	4/1/2014	SINGLE LINE DIAGRAM SWGR-A, MCC-A, MCC-B, AND PANEL ECS INSTALLATION
E-005	59 OF 187		FINAL	4/1/2014	SINGLE LINE DIAGRAM SWGR-B, MCC-C, AND MCC-D INSTALLATION
E-006	60 OF 187		FINAL	4/1/2014	ECS ROOM ELECTRICAL SYSTEM LAYOUT DEMOLITION
E-007	61 OF 187		FINAL	4/1/2014	ECS ROOM ELECTRICAL SYSTEM LAYOUT INSTALLATION
E-008	62 OF 187		FINAL	4/1/2014	COOLING TOWER ELECTRICAL SYSTEM LAYOUT DEMOLITION
E-009	63 OF 187		FINAL	4/1/2014	COOLING TOWER ELECTRICAL SYSTEM LAYOUT INSTALLATION
E-010	64 OF 187		FINAL	4/1/2014	PTCR APRON SYSTEM LAYOUT INSTALLATION
E-011	65 OF 187		FINAL	4/1/2014	ELECTRICAL DETAILS & ELEVATIONS ECS SWITCHGEAR AND MCC'S
E-012	66 OF 187		FINAL	4/1/2014	ELECTRICAL DETAILS & ELEVATIONS HEATER CONTROL ENCLOSURES AND MCC'S
E-013	67 OF 187		FINAL	4/1/2014	ELECTRICAL DETAILS AND ELEVATIONS DEMOLITION AND INSTALLATION
E-014	68 OF 187		FINAL	4/1/2014	ELECTRICAL EQUIPMENT RACK FRAMING PLAN & ELEVATION
E-015	69 OF 187		FINAL	4/1/2014	ECS ROOM LIGHTING SYSTEM LAYOUT INSTALLATION
E-016	70 OF 187		FINAL	4/1/2014	ELECTRICAL SCHEMATICS SHEET 1
E-017	71 OF 187		FINAL	4/1/2014	ELECTRICAL SCHEMATICS SHEET 2
E-018	72 OF 187		FINAL	4/1/2014	ELECTRICAL SCHEMATICS SHEET 3
E-019	73 OF 187		FINAL	4/1/2014	ELECTRICAL SCHEDULES DEMOLITION
E-020	74 OF 187		FINAL	4/1/2014	ELECTRICAL SCHEDULES INSTALLATION
E-021	75 OF 187		FINAL	3/7/2014	ELECTRICAL GROUNDING PLAN – EXISTING
E-022	76 OF 187		FINAL	3/7/2014	ELECTRICAL GROUNDING PLAN – NEW

INSTRUMENTATION

DWGNUM	SHEET	REV	Status	ISSUED DATE	TITLE
I-001	84 OF 187		FINAL	3/7/2014	INSTRUMENTATION GENERAL NOTES
I-002	85 OF 187		FINAL	3/7/2014	INSTRUMENTATION ABBREVIATIONS AND SYMBOLS
I-003	86 OF 187		FINAL	3/7/2014	INSTRUMENTATION EXISTING EQUIPMENT AND DEMOLITION SCHEDULE SHEET 1
I-004	87 OF 187		FINAL	3/7/2014	INSTRUMENTATION EXISTING EQUIPMENT AND DEMOLITION SCHEDULE SHEET 2
I-005	88 OF 187		FINAL	3/7/2014	INSTRUMENTATION EXISTING EQUIPMENT AND DEMOLITION SCHEDULE SHEET 3
I-006	89 OF 187		FINAL	3/7/2014	INSTRUMENTATION EXISTING EQUIPMENT LOCATIONS AND DEMOLITION ECS ROOM
I-007	90 OF 187		FINAL	3/7/2014	INSTRUMENTATION EXISTING EQUIPMENT LOCATIONS AND DEMOLITION COOLING TOWER AREA
I-008	91 OF 187		FINAL	3/7/2014	INSTRUMENTATION EXISTING CABLE TRAY LOCATIONS & NEW INSTALLATION LOCATIONS
I-009	92 OF 187		FINAL	3/7/2014	INSTRUMENTATION NEW EQUIPMENT SCHEDULE SHEET 1
I-010	93 OF 187		FINAL	3/7/2014	INSTRUMENTATION NEW EQUIPMENT SCHEDULE SHEET 2
I-011	94 OF 187		FINAL	3/7/2014	INSTRUMENTATION NEW EQUIPMENT SCHEDULE SHEET 3
I-012	95 OF 187		FINAL	3/7/2014	INSTRUMENTATION NEW EQUIPMENT LOCATIONS ECS ROOM
I-013	96 OF 187		FINAL	3/7/2014	INSTRUMENTATION NEW EQUIPMENT LOCATIONS COOLING TOWER AREA
I-014	97 OF 187		FINAL	3/7/2014	INSTRUMENTATION 28VDC DISTRIBUTION
I-015	98 OF 187		FINAL	3/7/2014	INSTRUMENTATION ECS NETWORK PLAN
I-016	99 OF 187		FINAL	3/7/2014	INSTRUMENTATION ECS LP SYSTEM A1/B1 CHASSIS 35423 DEMOLITION & MODIFICATION SHEET 1
I-017	100 OF 187		FINAL	3/7/2014	INSTRUMENTATION ECS LP SYSTEM A1/B1 CHASSIS 35423 DEMOLITION & MODIFICATION SHEET 2
I-018	101 OF 187		FINAL	3/7/2014	INSTRUMENTATION ECS LP SYSTEM A1/B1 CHASSIS 35423 TAG INDEX SHEET1
I-019	102 OF 187		FINAL	3/7/2014	INSTRUMENTATION ECS LP SYSTEM A1/B1 CHASSIS 35423 TAG INDEX SHEET 2
I-020	103 OF 187		FINAL	3/7/2014	INSTRUMENTATION ECS LP SYSTEM A1/B1 CHASSIS 35423 TAG INDEX SHEET 3
I-021	104 OF 187		FINAL	3/7/2014	INSTRUMENTATION ECS LP SYSTEM A1/B1 CHASSIS 35423 TAG INDEX SHEET 4
I-022	105 OF 187		FINAL	3/7/2014	INSTRUMENTATION ECS LP SYSTEM A1/B1 CHASSIS 35423 CONTROLS ONE-LINE
I-023	106 OF 187		FINAL	3/7/2014	INSTRUMENTATION ECS LP SYSTEM A1/B1 CHASSIS 35424 DEMOLITION & MODIFICATION SHEET 1
I-024	107 OF 187		FINAL	3/7/2014	INSTRUMENTATION ECS LP SYSTEM A1/B1 CHASSIS 35424 DEMOLITION & MODIFICATION SHEET 2
I-025	108 OF 187		FINAL	3/7/2014	INSTRUMENTATION ECS LP SYSTEM A1/B1 CHASSIS 35424 TAG INDEX SHEET 1
I-026	109 OF 187		FINAL	3/7/2014	INSTRUMENTATION ECS LP SYSTEM A1/B1 CHASSIS 35424 TAG INDEX SHEET 2
I-027	110 OF 187		FINAL	3/7/2014	INSTRUMENTATION ECS LP SYSTEM A1/B1 CHASSIS 35424 TAG INDEX SHEET 3
I-028	111 OF 187		FINAL	3/7/2014	INSTRUMENTATION ECS LP SYSTEM A1/B1 CHASSIS 35424 TAG INDEX SHEET 4
I-029	112 OF 187		FINAL	3/7/2014	INSTRUMENTATION ECS LP SYSTEM A1/B1 CHASSIS 35424 CONTROLS ONE-LINE
I-030	113 OF 187		FINAL	3/7/2014	INSTRUMENTATION ECS LP SYSTEM A1/B1 CHASSIS 35425 DEMOLITION & MODIFICATION SHEET 1
I-031	114 OF 187		FINAL	3/7/2014	INSTRUMENTATION ECS LP SYSTEM A1/B1 CHASSIS 35425 DEMOLITION & MODIFICATION SHEET 2
I-032	115 OF 187		FINAL	3/7/2014	INSTRUMENTATION ECS LP SYSTEM A1/B1 CHASSIS 35425 TAG INDEX SHEET 1
I-033	116 OF 187		FINAL	3/7/2014	INSTRUMENTATION ECS LP SYSTEM A1/B1 CHASSIS 35425 TAG INDEX SHEET 2
I-034	117 OF 187		FINAL	3/7/2014	INSTRUMENTATION ECS LP SYSTEM A1/B1 CHASSIS 35425 TAG INDEX SHEET 3
I-035	118 OF 187		FINAL	3/7/2014	INSTRUMENTATION ECS LP SYSTEM A1/B1 CHASSIS 35425 TAG INDEX SHEET 4
I-036	119 OF 187		FINAL	3/7/2014	INSTRUMENTATION ECS LP SYSTEM A1/B1 CHASSIS 35425 CONTROLS ONE-LINE
I-037	120 OF 187		FINAL	3/7/2014	INSTRUMENTATION ECS LP SYSTEM A1/B1 CHASSIS 35426 DEMOLITION & MODIFICATION SHEET 1
I-038	121 OF 187		FINAL	3/7/2014	INSTRUMENTATION ECS LP SYSTEM A1/B1 CHASSIS 35426 DEMOLITION & MODIFICATION SHEET 2
I-039	122 OF 187		FINAL	3/7/2014	INSTRUMENTATION ECS LP SYSTEM A1/B1 CHASSIS 35426 TAG INDEX SHEET 1
I-040	123 OF 187		FINAL	3/7/2014	INSTRUMENTATION ECS LP SYSTEM A1/B1 CHASSIS 35426 TAG INDEX SHEET 2
I-041	124 OF 187		FINAL	3/7/2014	INSTRUMENTATION ECS LP SYSTEM A1/B1 CHASSIS 35426 TAG INDEX SHEET 3
I-042	125 OF 187		FINAL	3/7/2014	INSTRUMENTATION ECS LP SYSTEM A1/B1 CHASSIS 35426 TAG INDEX SHEET 4
I-043	126 OF 187		FINAL	3/7/2014	INSTRUMENTATION ECS LP SYSTEM A1/B1 CHASSIS 35426 CONTROLS ONE-LINE
I-044	127 OF 187		FINAL	3/7/2014	INSTRUMENTATION ECS LP SYSTEM A1/B1 CHASSIS 35427 DEMOLITION & MODIFICATION SHEET 1
I-045	128 OF 187		FINAL	3/7/2014	INSTRUMENTATION ECS LP SYSTEM A1/B1 CHASSIS 35427 DEMOLITION & MODIFICATION SHEET 2
I-046	129 OF 187		FINAL	3/7/2014	INSTRUMENTATION ECS LP SYSTEM A1/B1 CHASSIS 35427 TAG INDEX SHEET 1
I-047	130 OF 187		FINAL	3/7/2014	INSTRUMENTATION ECS LP SYSTEM A1/B1 CHASSIS 35427 TAG INDEX SHEET 2
I-048	131 OF 187		FINAL	3/7/2014	INSTRUMENTATION ECS LP SYSTEM A1/B1 CHASSIS 35427 TAG INDEX SHEET 3
I-049	132 OF 187		FINAL	3/7/2014	INSTRUMENTATION ECS LP SYSTEM A1/B1 CHASSIS 35427 TAG INDEX SHEET 4
I-050	133 OF 187		FINAL	3/7/2014	INSTRUMENTATION ECS LP SYSTEM A1/B1 CHASSIS 35427 CONTROLS ONE-LINE
I-051	134 OF 187		FINAL	3/7/2014	INSTRUMENTATION ECS LP SYSTEM A1/B1 CHASSIS 35761 DEMOLITION & MODIFICATION SHEET 1
I-052	135 OF 187		FINAL	3/7/2014	INSTRUMENTATION ECS LP SYSTEM A1/B1 CHASSIS 35761 DEMOLITION & MODIFICATION SHEET 2
I-053	136 OF 187		FINAL	3/7/2014	INSTRUMENTATION ECS LP SYSTEM A1/B1 CHASSIS 35761 TAG INDEX SHEET 1
I-054	137 OF 187		FINAL	3/7/2014	INSTRUMENTATION ECS LP SYSTEM A1/B1 CHASSIS 35761 TAG INDEX SHEET 2
I-055	138 OF 187		FINAL	3/7/2014	INSTRUMENTATION ECS LP SYSTEM A1/B1 CHASSIS 35761 TAG INDEX SHEET 3
I-056	139 OF 187		FINAL	3/7/2014	INSTRUMENTATION ECS LP SYSTEM A1/B1 CHASSIS 35761 TAG INDEX SHEET 4
I-057	140 OF 187		FINAL	3/7/2014	INSTRUMENTATION ECS LP SYSTEM A1/B1 CHASSIS 35761 CONTROLS ONE-LINE
I-058	141 OF 187		FINAL	3/7/2014	INSTRUMENTATION 110VAC REGULATED/UNREGULATED DIST. PANEL 37568 GENERAL NOTES
I-059	142 OF 187		FINAL	3/7/2014	INSTRUMENTATION 110VAC REGULATED/UNREGULATED DIST. PANEL 37568 ASSEMBLY
I-060	143 OF 187		FINAL	3/7/2014	INSTRUMENTATION 110VAC REGULATED/UNREGULATED DIST. PANEL 37568 POWER DIST. TABLE
I-061	144 OF 187		FINAL	3/7/2014	INSTRUMENTATION ECS LP REGULATED/UNREGULATED 110VAC CHASSIS 37568 CONTROLS ONE-LINE
I-062	145 OF 187		FINAL	3/7/2014	INSTRUMENTATION ECS LP SYSTEM A1/B1 CHASSIS 37462 TAG INDEX SHEET 1
I-063	146 OF 187		FINAL	3/7/2014	INSTRUMENTATION ECS LP SYSTEM A1/B1 CHASSIS 37462 TAG INDEX SHEET 2
I-064	147 OF 187		FINAL	3/7/2014	INSTRUMENTATION ECS LP SYSTEM A1/B1 CHASSIS 37462 TAG INDEX SHEET 3
I-065	148 OF 187		FINAL	3/7/2014	INSTRUMENTATION ECS LP SYSTEM A1/B1 CHASSIS 37462 TAG INDEX SHEET 4
I-066	149 OF 187		FINAL	3/7/2014	INSTRUMENTATION ECS LP SYSTEM A1/B1 CHASSIS 37462 CONTROLS ONE-LINE
I-067	150 OF 187		FINAL	3/7/2014	INSTRUMENTATION ECS LP SYSTEM A1/B1 CHASSIS 37462 28VDC & CONNECTOR ALLOCATION TABLES
I-068	151 OF 187		FINAL	3/7/2014	INSTRUMENTATION REMOTE I/O PANEL 37462 GENERAL NOTES
I-069	152 OF 187		FINAL	3/7/2014	INSTRUMENTATION REMOTE I/O PANEL 37462 EQUIPMENT LIST
I-070	153 OF 187		FINAL	3/7/2014	INSTRUMENTATION REMOTE I/O PANEL 37462 ENCLOSURE ASSEMBLY
I-071	154 OF 187		FINAL	3/7/2014	INSTRUMENTATION REMOTE I/O PANEL 37462 PANEL ASSEMBLY
I-072	155 OF 187		FINAL	3/7/2014	INSTRUMENTATION REMOTE I/O PANEL 37462 COMPONENT DETAILS SHEET 1
I-073	156 OF 187		FINAL	3/7/2014	INSTRUMENTATION REMOTE I/O PANEL 37462 COMPONENT DETAILS SHEET 2
I-074	157 OF 187		FINAL	3/7/2014	INSTRUMENTATION REMOTE I/O PANEL 37462 TERMINAL BLOCK DETAILS
I-075	158 OF 187		FINAL	3/7/2014	INSTRUMENTATION REMOTE I/O PANEL 37462 CONTROL NET DETAILS
I-076	159 OF 187		FINAL	3/7/2014	INSTRUMENTATION GENERAL 110VAC SINGLE CONTROL VALVE SCHEMATIC
I-077	160 OF 187		FINAL	3/7/2014	INSTRUMENTATION BLOWER MOTOR TYPE 2 CONTROLS SCHEMATIC
I-078	161 OF 187		FINAL	3/7/2014	INSTRUMENTATION GN2 REGULATOR CONTROL SCHEMATIC
I-079	162 OF 187		FINAL	3/7/2014	INSTRUMENTATION 4-20mA REDUNDANT DUAL CONTROL VALVE SCHEMATIC
I-080	163 OF 187		FINAL	3/7/2014	INSTRUMENTATION CHILLERS 1, 2, AND 3 TEMPERATURE COMMAND SCHEMATIC
I-081	164 OF 187		FINAL	3/7/2014	INSTRUMENTATION GENERAL CHILLER INTERFACE CONTROLS SCHEMATIC
I-082	165 OF 187		FINAL	3/7/2014	INSTRUMENTATION GENERAL BOILER INTERFACE CONTROLS SCHEMATIC
I-083	166 OF 187		FINAL	3/7/2014	INSTRUMENTATION GENERAL COOLING TOWER FAN CONTROLS SCHEMATIC
I-084	167 OF 187		FINAL	3/7/2014	INSTRUMENTATION GENERAL PUMP CONTROLS SCHEMATIC
I-085	168 OF 187		FINAL	3/7/2014	INSTRUMENTATION REDUNDANT OVERTEMPERATURE SWITCH SCHEMATIC
I-086	169 OF 187		FINAL	3/7/2014	INSTRUMENTATION GENERAL REDUNDANT TEMPERATURE SIGNAL SCHEMATIC
I-087	170 OF 187		FINAL	3/7/2014	INSTRUMENTATION GENERAL REDUNDANT HUMIDITY SIGNAL SCHEMATIC
I-088	171 OF 187		FINAL	3/7/2014	INSTRUMENTATION 4-20mA REDUNDANT SINGLE CONTROL VALVE SCHEMATIC
I-089	172 OF 187		FINAL	3/7/2014	INSTRUMENTATION 24VDC REDUNDANT DUAL ISOLATION SOLENOID VALVE SCHEMATIC
I-090	173 OF 187		FINAL	3/7/2014	INSTRUMENTATION GENERAL CONTROLS SCHEMATIC
I-091	174 OF 187		FINAL	3/7/2014	INSTRUMENTATION GENERAL CONTACTOR FED HEATER SCR CONTROLS SCHEMATIC
I-092	175 OF 187		FINAL	3/7/2014	INSTRUMENTATION SWITCHGEAR AC POWER MONITOR SCHEMATIC
I-093	176 OF 187		FINAL	3/7/2014	INSTRUMENTATION REMOTE I/O DC POWER DISTRIBUTION SCHEMATIC SHEET 1
I-094	177 OF 187		FINAL	3/7/2014	INSTRUMENTATION REMOTE I/O DC POWER DISTRIBUTION SCHEMATIC SHEET 2
I-095	178 OF 187		FINAL	4/1/2014	INSTRUMENTATION REMOTE I/O 35424 UNREGULATED AC POWER SCHEMATIC
I-096	179 OF 187		FINAL	3/7/2014	INSTRUMENTATION REMOTE I/O 37568 REGULATED AC POWER SCHEMATIC
I-097	180 OF 187		FINAL	3/7/2014	INSTRUMENTATION REDUNDANT PROCESS TRANSDUCER WIRING DETAILS
I-098	181 OF 187		FINAL	3/7/2014	INSTRUMENTATION BLOWER MOTOR CONTROLS SCHEMATIC
I-099	182 OF 187		FINAL	3/7/2014	INSTRUMENTATION GENERAL 24VDC CONTROLLED SINGLE VALVE SCHEMATIC
I-100	183 OF 187		FINAL	3/7/2014	INSTRUMENTATION GENERAL 24VDC CONTROLLED DUAL VALVE SCHEMATIC
I-101	184 OF 187		FINAL	3/7/2014	INSTRUMENTATION GENERAL WIRING AND TERMINATION DETAILS SHEET 2
I-102	185 OF 187		FINAL	3/7/2014	INSTRUMENTATION SEQUENCE OF OPERATIONS SHEET 1
I-103	186 OF 187		FINAL	3/7/2014	INSTRUMENTATION SEQUENCE OF OPERATIONS SHEET 2
I-104	187 OF 187		FINAL	3/7/2014	INSTRUMENTATION SEQUENCE OF OPERATIONS SHEET 3

E0-1-79K39602

ITEM	ZONE	DESCRIPTION	DATE	APPROVED
		REVISIONS		

JACOBS
Jacobs Technology Inc.

SIGNATURES		DATE
DRAWN	MIKE VANHOOSE	3/07/14
CHECKED	MIKE GROTZ	4/01/14
SUBMITTED	RAVI MUTHIAH	4/01/14
ST OF LICENSURE: FL LICENSE NO: 68076		
APPROVED	GLEN WARD	4/01/14
	SCOTT HUNT	4/01/14

NATIONAL AERONAUTICS AND SPACE ADMINISTRATION
JOHN F. KENNEDY SPACE CENTER, NASA
KENNEDY SPACE CENTER, FLORIDA

KSC LAUNCH PAD 39-B
ENVIRONMENTAL CONTROL SYSTEM (ECS) REFURBISHMENT
DRAWING LIST

V-002

FILE NO.	SIZE	DWG.NO.	REV
	F	79K39602	
PCN. NO. 98898		SHEET 2 OF 187	

CONTROL VALVE SCHEDULE – PURGE AIR & GN2

A NO.	DEVICE NO.	PURPOSE	VALVE TYPE	VALVE SIZE	AIR FLOW (LBS/MIN)	PORT	BODY	FLANGE	LIMIT SWITCH	ACTUATOR TYPE	ACTUATOR V / PH @ 60 Hz	REMARKS
A199174	PCV-010B	DUMP	BUTTERFLY	12"	–	FULL	CS	150#	YES	CONTROL	120 / 1	VALVE: VANESSA SERIES 30,000 ROTARY PROCESS VALVE OR APPROVED EQUAL; ACTUATOR: BIFFI ICON 2000 ELECTRIC ACTUATOR OR APPROVED EQUAL, 120 VAC SINGLE PHASE CONTROL POWER TO MOTORIZED ACTUATOR, 4–20 mA VALVE POSITION CONTROL AND 4–20 mA POSITION FEEDBACK FOR VALVE POSITION.
A199182	PCV-014A	DUMP	BUTTERFLY	12"	–	FULL	CS	150#	YES	CONTROL	120 / 1	VALVE: VANESSA SERIES 30,000 ROTARY PROCESS VALVE OR APPROVED EQUAL; ACTUATOR: BIFFI ICON 2000 ELECTRIC ACTUATOR OR APPROVED EQUAL, 120 VAC SINGLE PHASE CONTROL POWER TO MOTORIZED ACTUATOR, 4–20 mA VALVE POSITION CONTROL AND 4–20 mA POSITION FEEDBACK FOR VALVE POSITION.
A199181	PCV-014B	DUMP	BUTTERFLY	12"	–	FULL	CS	150#	YES	CONTROL	120 / 1	VALVE: VANESSA SERIES 30,000 ROTARY PROCESS VALVE OR APPROVED EQUAL; ACTUATOR: BIFFI ICON 2000 ELECTRIC ACTUATOR OR APPROVED EQUAL, 120 VAC SINGLE PHASE CONTROL POWER TO MOTORIZED ACTUATOR, 4–20 mA VALVE POSITION CONTROL AND 4–20 mA POSITION FEEDBACK FOR VALVE POSITION.
A199217	PCV-015B	DUMP	BUTTERFLY	8"	–	FULL	CS	150#	YES	CONTROL	120 / 1	VALVE: VANESSA SERIES 30,000 ROTARY PROCESS VALVE OR APPROVED EQUAL; ACTUATOR: BIFFI ICON 2000 ELECTRIC ACTUATOR OR APPROVED EQUAL, 120 VAC SINGLE PHASE CONTROL POWER TO MOTORIZED ACTUATOR, 4–20 mA VALVE POSITION CONTROL AND 4–20 mA POSITION FEEDBACK FOR VALVE POSITION.
A199550	MOV-008	ISOLATION	BUTTERFLY	20"	1,050	FULL	CS	150#	YES	OPEN / CLOSE	120 / 1	VALVE: VANESSA SERIES 30,000 ROTARY PROCESS VALVE OR APPROVED EQUAL; ACTUATOR: BIFFI ICON 2000 ELECTRIC ACTUATOR OR APPROVED EQUAL, 120 VAC SINGLE PHASE CONTROL POWER TO MOTORIZED ACTUATOR, 120 VAC OPEN AND CLOSE CONTROL SIGNALS. FULL OPEN AND FULL CLOSE 120 VAC DRY CONTACTS FOR POSITION INDICATION.
A199552	MOV-011	ISOLATION	BUTTERFLY	20"	1,050	FULL	CS	150#	YES	OPEN / CLOSE	120 / 1	VALVE: VANESSA SERIES 30,000 ROTARY PROCESS VALVE OR APPROVED EQUAL; ACTUATOR: BIFFI ICON 2000 ELECTRIC ACTUATOR OR APPROVED EQUAL, 120 VAC SINGLE PHASE CONTROL POWER TO MOTORIZED ACTUATOR, 120 VAC OPEN AND CLOSE CONTROL SIGNALS. FULL OPEN AND FULL CLOSE 120 VAC DRY CONTACTS FOR POSITION INDICATION.
A199553	MOV-012	ISOLATION	BUTTERFLY	20"	1,050	FULL	CS	150#	YES	OPEN / CLOSE	120 / 1	VALVE: VANESSA SERIES 30,000 ROTARY PROCESS VALVE OR APPROVED EQUAL; ACTUATOR: BIFFI ICON 2000 ELECTRIC ACTUATOR OR APPROVED EQUAL, 120 VAC SINGLE PHASE CONTROL POWER TO MOTORIZED ACTUATOR, 120 VAC OPEN AND CLOSE CONTROL SIGNALS. FULL OPEN AND FULL CLOSE 120 VAC DRY CONTACTS FOR POSITION INDICATION.
A199551	MOV-013	ISOLATION	BUTTERFLY	20"	1,050	FULL	CS	150#	YES	OPEN / CLOSE	120 / 1	VALVE: VANESSA SERIES 30,000 ROTARY PROCESS VALVE OR APPROVED EQUAL; ACTUATOR: BIFFI ICON 2000 ELECTRIC ACTUATOR OR APPROVED EQUAL, 120 VAC SINGLE PHASE CONTROL POWER TO MOTORIZED ACTUATOR, 120 VAC OPEN AND CLOSE CONTROL SIGNALS. FULL OPEN AND FULL CLOSE 120 VAC DRY CONTACTS FOR POSITION INDICATION.
A199213	MOV-017	ISOLATION	BUTTERFLY	12"	250	FULL	CS	150#	YES	OPEN / CLOSE	120 / 1	VALVE: VANESSA SERIES 30,000 ROTARY PROCESS VALVE OR APPROVED EQUAL; ACTUATOR: BIFFI ICON 2000 ELECTRIC ACTUATOR OR APPROVED EQUAL, 120 VAC SINGLE PHASE CONTROL POWER TO MOTORIZED ACTUATOR, 24 VDC OPEN AND CLOSE CONTROL SIGNALS WITH 24 VDC SOURCED FROM ACTUATOR. FULL OPEN AND FULL CLOSE 24 VDC DRY CONTACTS FOR POSITION INDICATION.
A199219	MOV-018	ISOLATION	BUTTERFLY	12"	250	FULL	CS	150#	YES	OPEN / CLOSE	120 / 1	VALVE: VANESSA SERIES 30,000 ROTARY PROCESS VALVE OR APPROVED EQUAL; ACTUATOR: BIFFI ICON 2000 ELECTRIC ACTUATOR OR APPROVED EQUAL, 120 VAC SINGLE PHASE CONTROL POWER TO MOTORIZED ACTUATOR, 24 VDC OPEN AND CLOSE CONTROL SIGNALS WITH 24 VDC SOURCED FROM ACTUATOR. FULL OPEN AND FULL CLOSE 24 VDC DRY CONTACTS FOR POSITION INDICATION.
A199216	MOV-019	BLEED	BALL	3/4"	–	FULL	CS	150#	YES	OPEN / CLOSE	120 / 1	VALVE: SHARPE SERIES 50 OR APPROVED EQUAL; ACTUATOR: KEYSTONE ELECTRIC ACTUATOR OR APPROVED EQUAL, 120 VAC SINGLE PHASE CONTROL POWER TO MOTORIZED ACTUATOR, 24 VDC OPEN AND CLOSE CONTROL SIGNALS WITH 24 VDC SOURCED FROM ACTUATOR. FULL OPEN AND FULL CLOSE 24 VDC DRY CONTACTS FOR POSITION INDICATION.
A199172	MOV-020	ISOLATION	BUTTERFLY	20"	1,050	FULL	CS	150#	YES	OPEN / CLOSE	120 / 1	VALVE: VANESSA SERIES 30,000 ROTARY PROCESS VALVE OR APPROVED EQUAL; ACTUATOR: BIFFI ICON 2000 ELECTRIC ACTUATOR OR APPROVED EQUAL, 120 VAC SINGLE PHASE CONTROL POWER TO MOTORIZED ACTUATOR, 24 VDC OPEN AND CLOSE CONTROL SIGNALS WITH 24 VDC SOURCED FROM ACTUATOR. FULL OPEN AND FULL CLOSE 24 VDC DRY CONTACTS FOR POSITION INDICATION.
A199177	MOV-021	ISOLATION	BUTTERFLY	24"	1,050	FULL	CS	150#	YES	OPEN / CLOSE	120 / 1	VALVE: VANESSA SERIES 30,000 ROTARY PROCESS VALVE OR APPROVED EQUAL; ACTUATOR: BIFFI ICON 2000 ELECTRIC ACTUATOR OR APPROVED EQUAL, 120 VAC SINGLE PHASE CONTROL POWER TO MOTORIZED ACTUATOR, 24 VDC OPEN AND CLOSE CONTROL SIGNALS WITH 24 VDC SOURCED FROM ACTUATOR. FULL OPEN AND FULL CLOSE 24 VDC DRY CONTACTS FOR POSITION INDICATION.
A199258	MOV-300A	ISOLATION	BUTTERFLY	8"	50 – 75	FULL	CS	150#	YES	OPEN / CLOSE	120 / 1	VALVE: VANESSA SERIES 30,000 ROTARY PROCESS VALVE OR APPROVED EQUAL; ACTUATOR: BIFFI ICON 2000 ELECTRIC ACTUATOR OR APPROVED EQUAL, 120 VAC SINGLE PHASE CONTROL POWER TO MOTORIZED ACTUATOR, 24 VDC OPEN AND CLOSE CONTROL SIGNALS WITH 24 VDC SOURCED FROM ACTUATOR. FULL OPEN AND FULL CLOSE 24 VDC DRY CONTACTS FOR POSITION INDICATION.
A199259	MOV-300B	ISOLATION	BUTTERFLY	8"	50 – 75	FULL	CS	150#	YES	OPEN / CLOSE	120 / 1	VALVE: VANESSA SERIES 30,000 ROTARY PROCESS VALVE OR APPROVED EQUAL; ACTUATOR: BIFFI ICON 2000 ELECTRIC ACTUATOR OR APPROVED EQUAL, 120 VAC SINGLE PHASE CONTROL POWER TO MOTORIZED ACTUATOR, 24 VDC OPEN AND CLOSE CONTROL SIGNALS WITH 24 VDC SOURCED FROM ACTUATOR. FULL OPEN AND FULL CLOSE 24 VDC DRY CONTACTS FOR POSITION INDICATION.
A1993244	MOV-240A	ISOLATION	BUTTERFLY	10"	50 – 125	FULL	CS	150#	YES	OPEN / CLOSE	120 / 1	VALVE: VANESSA SERIES 30,000 ROTARY PROCESS VALVE OR APPROVED EQUAL; ACTUATOR: BIFFI ICON 2000 ELECTRIC ACTUATOR OR APPROVED EQUAL, 120 VAC SINGLE PHASE CONTROL POWER TO MOTORIZED ACTUATOR, 24 VDC OPEN AND CLOSE CONTROL SIGNALS WITH 24 VDC SOURCED FROM ACTUATOR. FULL OPEN AND FULL CLOSE 24 VDC DRY CONTACTS FOR POSITION INDICATION.
A199345	MOV-240B	ISOLATION	BUTTERFLY	10"	50 – 125	FULL	CS	150#	YES	OPEN / CLOSE	120 / 1	VALVE: VANESSA SERIES 30,000 ROTARY PROCESS VALVE OR APPROVED EQUAL; ACTUATOR: BIFFI ICON 2000 ELECTRIC ACTUATOR OR APPROVED EQUAL, 120 VAC SINGLE PHASE CONTROL POWER TO MOTORIZED ACTUATOR, 24 VDC OPEN AND CLOSE CONTROL SIGNALS WITH 24 VDC SOURCED FROM ACTUATOR. FULL OPEN AND FULL CLOSE 24 VDC DRY CONTACTS FOR POSITION INDICATION.
A199173	MOV-022	BLEED	BALL	3/4"	–	FULL	CS	150#	YES	OPEN / CLOSE	120 / 1	VALVE: SHARPE SERIES 50 OR APPROVED EQUAL; ACTUATOR: KEYSTONE ELECTRIC ACTUATOR OR APPROVED EQUAL, 120 VAC SINGLE PHASE CONTROL POWER TO MOTORIZED ACTUATOR, 24 VDC OPEN AND CLOSE CONTROL SIGNALS WITH 24 VDC SOURCED FROM ACTUATOR. FULL OPEN AND FULL CLOSE 24 VDC DRY CONTACTS FOR POSITION INDICATION.
A199178	MOV-023	BLEED	BALL	3/4"	–	FULL	CS	150#	YES	OPEN / CLOSE	120 / 1	VALVE: SHARPE SERIES 50 OR APPROVED EQUAL; ACTUATOR: KEYSTONE ELECTRIC ACTUATOR OR APPROVED EQUAL, 120 VAC SINGLE PHASE CONTROL POWER TO MOTORIZED ACTUATOR, 24 VDC OPEN AND CLOSE CONTROL SIGNALS WITH 24 VDC SOURCED FROM ACTUATOR. FULL OPEN AND FULL CLOSE 24 VDC DRY CONTACTS FOR POSITION INDICATION.
A199281	FCV-205	CONTROL	BUTTERFLY	12"	50 – 225	FULL	CS	150#	YES	CONTROL	120 / 1	VALVE: VANESSA SERIES 30,000 ROTARY PROCESS VALVE OR APPROVED EQUAL; ACTUATOR: BIFFI ICON 2000 ELECTRIC ACTUATOR OR APPROVED EQUAL, 120 VAC SINGLE PHASE CONTROL POWER TO MOTORIZED ACTUATOR, 4–20 mA VALVE POSITION CONTROL AND 4–20 mA POSITION FEEDBACK FOR VALVE POSITION. VALVE SHALL BE FAIL IN PLACE POSITION.
A199304	FCV-215	CONTROL	BUTTERFLY	12"	50 – 200	FULL	CS	150#	YES	CONTROL	120 / 1	VALVE: VANESSA SERIES 30,000 ROTARY PROCESS VALVE OR APPROVED EQUAL; ACTUATOR: BIFFI ICON 2000 ELECTRIC ACTUATOR OR APPROVED EQUAL, 120 VAC SINGLE PHASE CONTROL POWER TO MOTORIZED ACTUATOR, 4–20 mA VALVE POSITION CONTROL AND 4–20 mA POSITION FEEDBACK FOR VALVE POSITION. VALVE SHALL BE FAIL IN PLACE POSITION.
A199327	FCV-225	CONTROL	BUTTERFLY	12"	50 – 200	FULL	CS	150#	YES	CONTROL	120 / 1	VALVE: VANESSA SERIES 30,000 ROTARY PROCESS VALVE OR APPROVED EQUAL; ACTUATOR: BIFFI ICON 2000 ELECTRIC ACTUATOR OR APPROVED EQUAL, 120 VAC SINGLE PHASE CONTROL POWER TO MOTORIZED ACTUATOR, 4–20 mA VALVE POSITION CONTROL AND 4–20 mA POSITION FEEDBACK FOR VALVE POSITION. VALVE SHALL BE FAIL IN PLACE POSITION.
A199371	FCV-235	CONTROL	BUTTERFLY	14"	50 – 300	FULL	CS	150#	YES	CONTROL	120 / 1	VALVE: VANESSA SERIES 30,000 ROTARY PROCESS VALVE OR APPROVED EQUAL; ACTUATOR: BIFFI ICON 2000 ELECTRIC ACTUATOR OR APPROVED EQUAL, 120 VAC SINGLE PHASE CONTROL POWER TO MOTORIZED ACTUATOR, 4–20 mA VALVE POSITION CONTROL AND 4–20 mA POSITION FEEDBACK FOR VALVE POSITION. VALVE SHALL BE FAIL IN PLACE POSITION.
A199348	FCV-245	CONTROL	BUTTERFLY	8"	50 – 125	FULL	CS	150#	YES	CONTROL	120 / 1	VALVE: VANESSA SERIES 30,000 ROTARY PROCESS VALVE OR APPROVED EQUAL; ACTUATOR: BIFFI ICON 2000 ELECTRIC ACTUATOR OR APPROVED EQUAL, 120 VAC SINGLE PHASE CONTROL POWER TO MOTORIZED ACTUATOR, 4–20 mA VALVE POSITION CONTROL AND 4–20 mA POSITION FEEDBACK FOR VALVE POSITION. VALVE SHALL BE FAIL IN PLACE POSITION.
A199390	FCV-255	CONTROL	BUTTERFLY	10"	50 – 150	FULL	CS	150#	YES	CONTROL	120 / 1	VALVE: VANESSA SERIES 30,000 ROTARY PROCESS VALVE OR APPROVED EQUAL; ACTUATOR: BIFFI ICON 2000 ELECTRIC ACTUATOR OR APPROVED EQUAL, 120 VAC SINGLE PHASE CONTROL POWER TO MOTORIZED ACTUATOR, 4–20 mA VALVE POSITION CONTROL AND 4–20 mA POSITION FEEDBACK FOR VALVE POSITION. VALVE SHALL BE FAIL IN PLACE POSITION.
A199409	FCV-265	CONTROL	BUTTERFLY	10"	50 – 150	FULL	CS	150#	YES	CONTROL	120 / 1	VALVE: VANESSA SERIES 30,000 ROTARY PROCESS VALVE OR APPROVED EQUAL; ACTUATOR: BIFFI ICON 2000 ELECTRIC ACTUATOR OR APPROVED EQUAL, 120 VAC SINGLE PHASE CONTROL POWER TO MOTORIZED ACTUATOR, 4–20 mA VALVE POSITION CONTROL AND 4–20 mA POSITION FEEDBACK FOR VALVE POSITION. VALVE SHALL BE FAIL IN PLACE POSITION.
A199432	FCV-275	CONTROL	BUTTERFLY	12"	50 – 250	FULL	CS	150#	YES	CONTROL	120 / 1	VALVE: VANESSA SERIES 30,000 ROTARY PROCESS VALVE OR APPROVED EQUAL; ACTUATOR: BIFFI ICON 2000 ELECTRIC ACTUATOR OR APPROVED EQUAL, 120 VAC SINGLE PHASE CONTROL POWER TO MOTORIZED ACTUATOR, 4–20 mA VALVE POSITION CONTROL AND 4–20 mA POSITION FEEDBACK FOR VALVE POSITION. VALVE SHALL BE FAIL IN PLACE POSITION.
A199451	FCV-285	CONTROL	BUTTERFLY	12"	50 – 250	FULL	CS	150#	YES	CONTROL	120 / 1	VALVE: VANESSA SERIES 30,000 ROTARY PROCESS VALVE OR APPROVED EQUAL; ACTUATOR: BIFFI ICON 2000 ELECTRIC ACTUATOR OR APPROVED EQUAL, 120 VAC SINGLE PHASE CONTROL POWER TO MOTORIZED ACTUATOR, 4–20 mA VALVE POSITION CONTROL AND 4–20 mA POSITION FEEDBACK FOR VALVE POSITION. VALVE SHALL BE FAIL IN PLACE POSITION.
A199470	FCV-295	CONTROL	BUTTERFLY	12"	50 – 250	FULL	CS	150#	YES	CONTROL	120 / 1	VALVE: VANESSA SERIES 30,000 ROTARY PROCESS VALVE OR APPROVED EQUAL; ACTUATOR: BIFFI ICON 2000 ELECTRIC ACTUATOR OR APPROVED EQUAL, 120 VAC SINGLE PHASE CONTROL POWER TO MOTORIZED ACTUATOR, 4–20 mA VALVE POSITION CONTROL AND 4–20 mA POSITION FEEDBACK FOR VALVE POSITION. VALVE SHALL BE FAIL IN PLACE POSITION.
A199241	FCV-305	CONTROL	BUTTERFLY	10"	50 – 175	FULL	CS	150#	YES	CONTROL	120 / 1	VALVE: VANESSA SERIES 30,000 ROTARY PROCESS VALVE OR APPOVED EQUAL; ACTUATOR: BIFFI ICON 2000 ELECTRIC ACTUATOR OR APPROVED EQUAL, 120 VAC SINGLE PHASE CONTROL POWER TO MOTORIZED ACTUATOR, 4–20 mA VALVE POSITION CONTROL AND 4–20 mA POSITION FEEDBACK FOR VALVE POSITION. VALVE SHALL BE FAIL IN PLACE POSITION.
A199262	FCV-315	CONTROL	BUTTERFLY	6"	50 – 75	FULL	CS	150#	YES	CONTROL	120 / 1	VALVE: VANESSA SERIES 30,000 ROTARY PROCESS VALVE OR APPROVED EQUAL; ACTUATOR: BIFFI ICON 2000 ELECTRIC ACTUATOR OR APPROVED EQUAL, 120 VAC SINGLE PHASE CONTROL POWER TO MOTORIZED ACTUATOR, 4–20 mA VALVE POSITION CONTROL AND 4–20 mA POSITION FEEDBACK FOR VALVE POSITION. VALVE SHALL BE FAIL IN PLACE POSITION.

PRESSURE BLOWER SCHEDULE 2

A NO.	DEVICE NO.	LOCATION	AREA SERVED	MAX. AIRFLOW RATE (LBS/HR)	DISCHARGE PRESSURE (PSIG)	FAN TYPE	MOTOR HP	MOTOR RPM	MOTOR V / PH	MOTOR ENC.	REMARKS
A199168	NB-001 (NORTH)	ECS ROOM	NORTH PURGE CIRCUITS	1,050	3.85	CENTRIFUGAL PRESSURE BLOWER	350	3570	480 / 3	TEFC	CONTINENTAL BLOWER, MODEL 600 WITH HYUNDAI HEAVY INDUSTRIES MOTOR, MODEL #HSD350-36-L449TS OR APPROVED EQUAL.
A199169	RB-002 (STANDBY)	ECS ROOM	NORTH OR SOUTH PURGE CIRCUITS	1,050	3.85	CENTRIFUGAL PRESSURE BLOWER	350	3570	480 / 3	TEFC	CONTINENTAL BLOWER, MODEL 600 WITH HYUNDAI HEAVY INDUSTRIES MOTOR, MODEL #HSD350-36-L449TS OR APPROVED EQUAL.
A199170	SB-003 (SOUTH)	ECS ROOM	SOUTH PURGE CIRCUITS	1,050	3.85	CENTRIFUGAL PRESSURE BLOWER	350	3570	480 / 3	TEFC	CONTINENTAL BLOWER, MODEL 600 WITH HYUNDAI HEAVY INDUSTRIES MOTOR, MODEL #HSD350-36-L449TS OR APPROVED EQUAL.
A199214	LB-004 (ICPS)	ECS ROOM	ICPS CIRCUITS	250	4.8	CENTRIFUGAL PRESSURE BLOWER	125	3550	480 / 3	TEFC	CONTINENTAL BLOWER, MODEL 151 WITH HYUNDAI HEAVY INDUSTRIES MOTOR, MODEL #HHI125-36-444TS OR APPROVED EQUAL.
A199215	LRB-005 (STANDBY)	ECS ROOM	ICPS CIRCUITS	250	4.8	CENTRIFUGAL PRESSURE BLOWER	125	3550	480 / 3	TEFC	CONTINENTAL BLOWER, MODEL 151 WITH HYUNDAI HEAVY INDUSTRIES MOTOR, MODEL #HHI125-36-444TS OR APPROVED EQUAL.

ELECTRIC HEATER SCHEDULE 2

A NO.	DEVICE NO.	LOCATION	PURGE CIRCUIT	MAX. AIR FLOW (LBS/MIN)	MAX. AIR TEMP (°F)	HEAT (KW)	V / PH	AMPS	REMARKS
A199491 A199492	H-201A H-201B	ECS ROOM	6-N, CS/IT	225	155	126.4	460 / 3	151.9	WATLOW DUCT HEATERS, MODEL D200SX5-W-K OR APPROVED EQUAL.
A199493 A199494	H-211A H-211B	ECS ROOM	2-N, CS/FS	200	155	112.3	460 / 3	135.0	WATLOW DUCT HEATERS, MODEL D75SX5-W-K OR APPROVED EQUAL.
A199495 A199496	H-221A H-221B	ECS ROOM	1-N, SM	200	110	70.6	460 / 3	84.8	WATLOW DUCT HEATERS, MODEL D48SX5-W-K OR APPROVED EQUAL.
A199499 A199500	H-231A H-231B	ECS ROOM	7-N, CS/AFT	300	155	168.5	460 / 3	204.3	WATLOW DUCT HEATERS, MODEL D125SX5-W-K OR APPROVED EQUAL.
A199497 A199498	H-241A H-241B	ECS ROOM	5-N, SPARE	125	110	44.1	460 / 3	53.0	WATLOW DUCT HEATERS, MODEL D30SX5-W-K OR APPROVED EQUAL.
A199501 A199502	H-251A H-251B	ECS ROOM	12-S, LAS	150	110	52.9	460 / 3	63.6	WATLOW DUCT HEATERS, MODEL D36SX5-W-K OR APPROVED EQUAL.
A199503 A199504	H-261A H-261B	ECS ROOM	11-S, EC/CC	150	110	52.9	460 / 3	63.6	WATLOW DUCT HEATERS, MODEL D36SX5-W-K OR APPROVED EQUAL.
A199505 A199506	H-271A H-271B	ECS ROOM	8-S, CS/ENG	250	110	88.2	460 / 3	108.2	WATLOW DUCT HEATERS, MODEL D60SX5-W-K OR APPROVED EQUAL.
A199507 A199508	H-281A H-281B	ECS ROOM	9-S, SPARE	250	110	88.2	460 / 3	108.2	WATLOW DUCT HEATERS, MODEL D60SX5-W-K OR APPROVED EQUAL.
A199509 A199510	H-291A H-291B	ECS ROOM	10-S, SPARE	250	110	88.2	460 / 3	108.2	WATLOW DUCT HEATERS, MODEL D60SX5-W-K OR APPROVED EQUAL.
A199511 A199512	H-301A H-301B	ECS ROOM	3-L, ICPS	175	185	122.7	460 / 3	147.9	WATLOW DUCT HEATERS, MODEL D100SX5-W-K OR APPROVED EQUAL.
A199513 A199514	H-311A H-311B	ECS ROOM	4-L, SPARE	75	110	26.5	460 / 3	31.8	WATLOW DUCT HEATERS, MODEL D18SX5-W-K OR APPROVED EQUAL.

HUMIDIFIER SCHEDULE

A NO.	DEVICE NO.	LOCATION	SERVICE	PURGE CIRCUIT	STEAM (LBS/HR)	REMARKS
A201387	H-212	ECS ROOM	STEAM HUMIDIFICATION	2-N, CS/FS	28.3	DRISTEEM ULTRA-SORB, MODEL XV DISPERSION TUBES OR APPROVED EQUAL.
A201388	H-222	ECS ROOM	STEAM HUMIDIFICATION	1-N, SM	28.3	DRISTEEM ULTRA-SORB, MODEL XV DISPERSION TUBES OR APPROVED EQUAL.
A201389	H-232	ECS ROOM	STEAM HUMIDIFICATION	7-N, CS/AFT	42.5	DRISTEEM ULTRA-SORB, MODEL XV DISPERSION TUBES OR APPROVED EQUAL.
A201390	H-272	ECS ROOM	STEAM HUMIDIFICATION	8-S, CS/ENG	35.4	DRISTEEM ULTRA-SORB, MODEL XV DISPERSION TUBES OR APPROVED EQUAL.
A201391	H-302	ECS ROOM	STEAM HUMIDIFICATION	3-L, ICPS	24.8	DRISTEEM ULTRA-SORB, MODEL XV DISPERSION TUBES OR APPROVED EQUAL.

STEAM BOILER SCHEDULE 2

A NO.	DEVICE NO.	LOCATION	SERVICE	LBS/HR	TYPE	ELEMENTS QTY	ELEMENTS KW	V / PH	AMPS	REMARKS
A201382	NBO-601	ECS ROOM	STEAM	155	ELECTRIC	12	4	480 / 3	59	NORTH BOILER, CLEAVER BROOKS MODEL S/CR-120, RATED KW 48 (12 ELEMENTS, 4 KW EACH) AND ASME RATING 168 LBS ELECTRIC STEAM BOILER OR APPROVED EQUAL, 480V/3PH/60HZ, 59 AMPS; PROVIDED WITH 3 PRESSURE SWITCHES, RELIEF VALVE, SIGHT GLASS, AND FLOAT VALVE.
A201383	SBO-602	ECS ROOM	STEAM	155	ELECTRIC	12	4	480 / 3	59	SOUTH BOILER, CLEAVER BROOKS MODEL S/CR-120, RATED KW 48 (12 ELEMENTS, 4 KW EACH) AND ASME RATING 168 LBS ELECTRIC STEAM BOILER OR APPROVED EQUAL, 480V/3PH/60HZ, 59 AMPS; PROVIDED WITH 3 PRESSURE SWITCHES, RELIEF VALVE, SIGHT GLASS, AND FLOAT VALVE. (A STAND ALONE WATER CONDITIONER, A201392 SHALL BE PROVIDED TO CONDITION FEEDWATER FOR BOTH BOILERS. SEE DRAWING M-041 FOR DETAILS).

COOLING TOWER FAN SCHEDULE 3

A NO.	DEVICE NO.	AIRFLOW RATE (ACFM)	STATIC PRESSURE (IN H20)	DISCHARGE PRESSURE (IN H20)	FAN DIAMETER	FAN	NUMBER OF BLADES	FAN BHP	FAN RPM	GEAR DRIVE DETAILS	MOTOR HP	MOTOR RPM	MOTOR V / PH	MOTOR ENC.	REMARKS
A6651	CTF-401	TBD	TBD	TBD	9'-0"	HUDSON TUF-LITE II FAN, 3000H SERIES HUB OR APPROVED EQUAL.	TBD	TBD	TBD	AMARILLO RIGHT ANGLE MODEL 85, 5:1 REDUCTION RATIO, 25 AGMA MECHANICAL H.P. RATING, ONE REDUCTION OR APPROVED EQUAL.	TBD	1750	460 / 3	TEFC	RELIANCE ELECTRIC XE MOTOR, TYPE 256T OR APPROVED EQUAL.
A6652	CTF-402	TBD	TBD	TBD	9'-0"	HUDSON TUF-LITE II FAN, 3000H SERIES HUB OR APPROVED EQUAL.	TBD	TBD	TBD	AMARILLO RIGHT ANGLE MODEL 85, 5:1 REDUCTION RATIO, 25 AGMA MECHANICAL H.P. RATING, ONE REDUCTION OR APPROVED EQUAL.	TBD	1750	460 / 3	TEFC	RELIANCE ELECTRIC XE MOTOR, TYPE 256T OR APPROVED EQUAL.
A6653	CTF-403	TBD	TBD	TBD	9'-0"	HUDSON TUF-LITE II FAN, 3000H SERIES HUB OR APPROVED EQUAL.	TBD	TBD	TBD	AMARILLO RIGHT ANGLE MODEL 85, 5:1 REDUCTION RATIO, 25 AGMA MECHANICAL H.P. RATING, ONE REDUCTION OR APPROVED EQUAL.	TBD	1750	460 / 3	TEFC	RELIANCE ELECTRIC XE MOTOR, TYPE 256T OR APPROVED EQUAL.

COOLING COIL SCHEDULE

A NO.	COIL	LOCATION	SERVICE	Fluid Side GPM	Fluid Side INLET TEMP (.:C)	Fluid Side OUTLET TEMP (.:C)	Fluid Side MAX PRESS DROP (FT H20)	AIR SIDE (AMBIENT TEMP 96 DWB/85WDB) FLOW RATE (LB/MIN)	AIR SIDE INLET TEMP (..C)	AIR SIDE OUTLET TEMP (..C)	AIR SIDE MAX PRESS DROP (FT H20)	REMARKS
A6706	PRE-COOL	NORTH COOLING CHAMBER	CONDENSER WATER	194	95	105	13	194	151	100	13	EXISTING PRE-COIL SHALL BE REPLACED.
A6708	PRE-COOL	SOUTH COOLING CHAMBER	CONDENSER WATER	194	95	105	13	194	151	100	13	EXISTING PRE-COIL SHALL BE REPLACED.
A6862	POST-COOL	NORTH COOLING CHAMBER	CHILLED GLYCOL WATER	600	31	41	20	600	100	34	20	IF FIXED PRICE OPTION FPO-2 IS NOT EXCERSISED, EXISTING POST-COOL COIL SHALL REMAIN IN PLACE.
A6863	POST-COOL	SOUTH COOLING CHAMBER	CHILLED GLYCOL WATER	600	31	41	20	600	100	34	20	IF FIXED PRICE OPTION FPO-2 IS NOT EXCERSISED, EXISTING POST-COOL COIL SHALL REMAIN IN PLACE.
A501799	PRE-COOL	ICPS COOLING CHAMBER	CONDENSER WATER	55	95	105	10	55	166	100	10	EXISTING PRE-COIL SHALL BE REPLACED.
A501800	POST-COOL	ICPS COOLING CHAMBER	CHILLED GLYCOL WATER	150	31	41	15	150	100	34	15	IF FIXED PRICE OPTION FPO-2 IS NOT EXCERSISED, EXISTING POST-COOL COIL SHALL REMAIN IN PLACE.

NOTES:

1. ALL ITEMS NOTED WITH NASA PART NUMBERS (DIFFERENTIAL PRESSURE TRANSMITTERS) WILL BE GOVERNMENT FURNISHED EQUIPMENT – PROVIDED BY OTHER, INSTALLED BY CONTRACTOR.

2. SEE SPECIFICATION SECTION 23 FOR SPECIAL EMI ENCLOSURE REQUIREMENTS.

3. EACH TOWER SHALL BE REDESIGNED TO MEET THE FOLLOWING AT THE DESIGN DAY CONDITIONS OF 96'F DB AND 85'F WB:

   CONDENSER WATER FLOWRATE PER TOWER: 1050 GPM
   HOT WATER TEMPERATURE: 105'F
   COLD WATER TEMPERATURE: 95'F

EO-1-79K39602

SYM	ZONE	DESCRIPTION	DATE	APPROVED
		REVISIONS		

JACOBS
Jacobs Technology Inc.

SIGNATURES		DATE
DRAWN	MIKE VANHOOSE	3/07/14
CHECKED	BRIAN GODFREY	4/09/14
SUBMITTED	RAVI MUTHIAH	4/09/14
ST OF LICENSURE: FL LICENSE NO: 68076		
APPROVED	GLEN WARD	4/09/14
	DREW GILLESPIE	4/09/14

NATIONAL AERONAUTICS AND SPACE ADMINISTRATION
JOHN F. KENNEDY SPACE CENTER, NASA
KENNEDY SPACE CENTER, FLORIDA

KSC LAUNCH PAD 39-B
ENVIRONMENTAL CONTROL SYSTEM (ECS) REFURBISHMENT
MECHANICAL INSTALLATION
EQUIPMENT SCHEDULES

M-045

FILE NO. | SIZE F | DWG.NO. 79K39602 | REV
PCN. NO. 98898 | SHEET 48 OF 187

INSTRUMENTATION SCHEDULE – AIR/GN2

A NO.	DEVICE NO.	DESCRIPTION	SERVICE	REMARKS
A199196 A199197	MT–104A MT–104B	MOISTURE TRANSMITTER	AIR	MOISTURE TRANSMITTER, VAISALA 360 8A12BCK2B4BL5A3H, 28VDC POWERED 1–4–20mA %RH FEEDBACK, GOVERNMENT FURNISHED EQUIPMENT AND INSTALLED BY CONTRACTOR
A199210 A199211	MT–114A MT–114B	MOISTURE TRANSMITTER	AIR	MOISTURE TRANSMITTER, VAISALA 360 8A12BCK2B4BL5A3H, 28VDC POWERED 1–4–20mA %RH FEEDBACK, GOVERNMENT FURNISHED EQUIPMENT AND INSTALLED BY CONTRACTOR
A199232 A199233	MT–124A MT–124B	MOISTURE TRANSMITTER	AIR	MOISTURE TRANSMITTER, VAISALA 360 8A12BCK2B4BL5A3H, 28VDC POWERED 1–4–20mA %RH FEEDBACK, GOVERNMENT FURNISHED EQUIPMENT AND INSTALLED BY CONTRACTOR
A199283 A199284	MT/TT–206A MT/TT–206B	MOISTURE & TEMPERATURE TRANSMITTER	AIR	MOISTURE AND TEMPERATURE TRANSMITTER, VAISALA 360 8A12BCK2B4BL5A3H, 28VDC POWERED 1–4–20mA %RH FEEDBACK AND 1–4–20mA TEMPERATURE FEEDBACK, GOVERNMENT FURNISHED EQUIPMENT AND INSTALLED BY CONTRACTOR
A199306 A199307	MT/TT–216A MT/TT–216B	MOISTURE & TEMPERATURE TRANSMITTER	AIR	MOISTURE AND TEMPERATURE TRANSMITTER, VAISALA 360 8A12BCK2B4BL5A3H, 28VDC POWERED 1–4–20mA %RH FEEDBACK AND 1–4–20mA TEMPERATURE FEEDBACK, GOVERNMENT FURNISHED EQUIPMENT AND INSTALLED BY CONTRACTOR
A199329 A199330	MT/TT–226A MT/TT–226B	MOISTURE & TEMPERATURE TRANSMITTER	AIR	MOISTURE AND TEMPERATURE TRANSMITTER, VAISALA 360 8A12BCK2B4BL5A3H, 28VDC POWERED 1–4–20mA %RH FEEDBACK AND 1–4–20mA TEMPERATURE FEEDBACK, GOVERNMENT FURNISHED EQUIPMENT AND INSTALLED BY CONTRACTOR
A199373 A199374	MT/TT–236A MT/TT–236B	MOISTURE & TEMPERATURE TRANSMITTER	AIR	MOISTURE AND TEMPERATURE TRANSMITTER, VAISALA 360 8A12BCK2B4BL5A3H, 28VDC POWERED 1–4–20mA %RH FEEDBACK AND 1–4–20mA TEMPERATURE FEEDBACK, GOVERNMENT FURNISHED EQUIPMENT AND INSTALLED BY CONTRACTOR
A199350 A199351	MT/TT–246A MT/TT–246B	MOISTURE & TEMPERATURE TRANSMITTER	AIR	MOISTURE AND TEMPERATURE TRANSMITTER, VAISALA 360 8A12BCK2B4BL5A3H, 28VDC POWERED 1–4–20mA %RH FEEDBACK AND 1–4–20mA TEMPERATURE FEEDBACK, GOVERNMENT FURNISHED EQUIPMENT AND INSTALLED BY CONTRACTOR
A199392 A199393	MT/TT–256A MT/TT–256B	MOISTURE & TEMPERATURE TRANSMITTER	AIR	MOISTURE AND TEMPERATURE TRANSMITTER, VAISALA 360 8A12BCK2B4BL5A3H, 28VDC POWERED 1–4–20mA %RH FEEDBACK AND 1–4–20mA TEMPERATURE FEEDBACK, GOVERNMENT FURNISHED EQUIPMENT AND INSTALLED BY CONTRACTOR
A199411 A199412	MT/TT–266A MT/TT–266B	MOISTURE & TEMPERATURE TRANSMITTER	AIR	MOISTURE AND TEMPERATURE TRANSMITTER, VAISALA 360 8A12BCK2B4BL5A3H, 28VDC POWERED 1–4–20mA %RH FEEDBACK AND 1–4–20mA TEMPERATURE FEEDBACK, GOVERNMENT FURNISHED EQUIPMENT AND INSTALLED BY CONTRACTOR
A199434 A199435	MT/TT–276A MT/TT–276B	MOISTURE & TEMPERATURE TRANSMITTER	AIR	MOISTURE AND TEMPERATURE TRANSMITTER, VAISALA 360 8A12BCK2B4BL5A3H, 28VDC POWERED 1–4–20mA %RH FEEDBACK AND 1–4–20mA TEMPERATURE FEEDBACK, GOVERNMENT FURNISHED EQUIPMENT AND INSTALLED BY CONTRACTOR
A199453 A199454	MT/TT–286A MT/TT–286B	MOISTURE & TEMPERATURE TRANSMITTER	AIR	MOISTURE AND TEMPERATURE TRANSMITTER, VAISALA 360 8A12BCK2B4BL5A3H, 28VDC POWERED 1–4–20mA %RH FEEDBACK AND 1–4–20mA TEMPERATURE FEEDBACK, GOVERNMENT FURNISHED EQUIPMENT AND INSTALLED BY CONTRACTOR
A199472 A199473	MT/TT–296A MT/TT–296B	MOISTURE & TEMPERATURE TRANSMITTER	AIR	MOISTURE AND TEMPERATURE TRANSMITTER, VAISALA 360 8A12BCK2B4BL5A3H, 28VDC POWERED 1–4–20mA %RH FEEDBACK AND 1–4–20mA TEMPERATURE FEEDBACK, GOVERNMENT FURNISHED EQUIPMENT AND INSTALLED BY CONTRACTOR
A199243 A199244	MT/TT–306A MT/TT–306B	MOISTURE & TEMPERATURE TRANSMITTER	AIR	MOISTURE AND TEMPERATURE TRANSMITTER, VAISALA 360 8A12BCK2B4BL5A3H, 28VDC POWERED 1–4–20mA %RH FEEDBACK AND 1–4–20mA TEMPERATURE FEEDBACK, GOVERNMENT FURNISHED EQUIPMENT AND INSTALLED BY CONTRACTOR
A199264 A199265	MT/TT–316A MT/TT–316B	MOISTURE & TEMPERATURE TRANSMITTER	AIR	MOISTURE AND TEMPERATURE TRANSMITTER, VAISALA 360 8A12BCK2B4BL5A3H, 28VDC POWERED 1–4–20mA %RH FEEDBACK AND 1–4–20mA TEMPERATURE FEEDBACK, GOVERNMENT FURNISHED EQUIPMENT AND INSTALLED BY CONTRACTOR
A199279 A199280	OTS–201A OTS–201B	OVER TEMP. SWITCH	AIR	PROVIDED WITH ELECTRIC HEATER.
A199298 A199299	OTS–211A OTS–211B	OVER TEMP. SWITCH	AIR	PROVIDED WITH ELECTRIC HEATER.
A199321 A199322	OTS–221A OTS–221B	OVER TEMP. SWITCH	AIR	PROVIDED WITH ELECTRIC HEATER.
A199365 A199366	OTS–231A OTS–231B	OVER TEMP. SWITCH	AIR	PROVIDED WITH ELECTRIC HEATER.
A199346 A199347	OTS–241A OTS–241B	OVER TEMP. SWITCH	AIR	PROVIDED WITH ELECTRIC HEATER.
A199388 A199389	OTS–251A OTS–251B	OVER TEMP. SWITCH	AIR	PROVIDED WITH ELECTRIC HEATER.
A199407 A199408	OTS–261A OTS–261B	OVER TEMP. SWITCH	AIR	PROVIDED WITH ELECTRIC HEATER.
A199426 A199427	OTS–271A OTS–271B	OVER TEMP. SWITCH	AIR	PROVIDED WITH ELECTRIC HEATER.
A199449 A199450	OTS–281A OTS–281B	OVER TEMP. SWITCH	AIR	PROVIDED WITH ELECTRIC HEATER.
A199468 A199469	OTS–291A OTS–291B	OVER TEMP. SWITCH	AIR	PROVIDED WITH ELECTRIC HEATER.
A199235 A199236	OTS–301A OTS–301B	OVER TEMP. SWITCH	AIR	PROVIDED WITH ELECTRIC HEATER.
A199260 A199261	OTS–311A OTS–311B	OVER TEMP. SWITCH	AIR	PROVIDED WITH ELECTRIC HEATER.
A199184 A199185	PT–101A PT–101B	PRESSURE TRANSDUCER	AIR	TABER PRESSURE TRANSDUCER, MODEL 2911, NASA PART NUMBER 79K38668–A–C–06, MADE BY TELEDYNE TABER, 455 BRYANT STREET NORTH, TONAWANDA, NY, 14120. GOVERNMENT FURNISHED EQUIPMENT AND INSTALLED BY CONTRACTOR
A199198 A199199	PT–111A PT–111B	PRESSURE TRANSDUCER	AIR	TABER PRESSURE TRANSDUCER, MODEL 2911, NASA PART NUMBER 79K38668–A–C–06, MADE BY TELEDYNE TABER, 455 BRYANT STREET NORTH, TONAWANDA, NY, 14120. GOVERNMENT FURNISHED EQUIPMENT AND INSTALLED BY CONTRACTOR
A199220 A199221	PT–121A PT–121B	PRESSURE TRANSDUCER	AIR	TABER PRESSURE TRANSDUCER, MODEL 2911, NASA PART NUMBER 79K38668–A–C–06, MADE BY TELEDYNE TABER, 455 BRYANT STREET NORTH, TONAWANDA, NY, 14120. GOVERNMENT FURNISHED EQUIPMENT AND INSTALLED BY CONTRACTOR
A199291 A199292	PT–208A PT–208B	PRESSURE TRANSDUCER	AIR	TABER PRESSURE TRANSDUCER, MODEL 2911, NASA PART NUMBER 79K38668–A–C–06, MADE BY TELEDYNE TABER, 455 BRYANT STREET NORTH, TONAWANDA, NY, 14120. GOVERNMENT FURNISHED EQUIPMENT AND INSTALLED BY CONTRACTOR
A199314 A199315	PT–218A PT–218B	PRESSURE TRANSDUCER	AIR	TABER PRESSURE TRANSDUCER, MODEL 2911, NASA PART NUMBER 79K38668–A–C–06, MADE BY TELEDYNE TABER, 455 BRYANT STREET NORTH, TONAWANDA, NY, 14120. GOVERNMENT FURNISHED EQUIPMENT AND INSTALLED BY CONTRACTOR
A199337 A199338	PT–228A PT–228B	PRESSURE TRANSDUCER	AIR	TABER PRESSURE TRANSDUCER, MODEL 2911, NASA PART NUMBER 79K38668–A–C–06, MADE BY TELEDYNE TABER, 455 BRYANT STREET NORTH, TONAWANDA, NY, 14120. GOVERNMENT FURNISHED EQUIPMENT AND INSTALLED BY CONTRACTOR
A199381 A199382	PT–238A PT–238B	PRESSURE TRANSDUCER	AIR	TABER PRESSURE TRANSDUCER, MODEL 2911, NASA PART NUMBER 79K38668–A–C–06, MADE BY TELEDYNE TABER, 455 BRYANT STREET NORTH, TONAWANDA, NY, 14120. GOVERNMENT FURNISHED EQUIPMENT AND INSTALLED BY CONTRACTOR
A199358 A199359	PT–248A PT–248B	PRESSURE TRANSDUCER	AIR	TABER PRESSURE TRANSDUCER, MODEL 2911, NASA PART NUMBER 79K38668–A–C–06, MADE BY TELEDYNE TABER, 455 BRYANT STREET NORTH, TONAWANDA, NY, 14120. GOVERNMENT FURNISHED EQUIPMENT AND INSTALLED BY CONTRACTOR
A199400 A199401	PT–258A PT–258B	PRESSURE TRANSDUCER	AIR	TABER PRESSURE TRANSDUCER, MODEL 2911, NASA PART NUMBER 79K38668–A–C–06, MADE BY TELEDYNE TABER, 455 BRYANT STREET NORTH, TONAWANDA, NY, 14120. GOVERNMENT FURNISHED EQUIPMENT AND INSTALLED BY CONTRACTOR
A199419 A199420	PT–268A PT–268B	PRESSURE TRANSDUCER	AIR	TABER PRESSURE TRANSDUCER, MODEL 2911, NASA PART NUMBER 79K38668–A–C–06, MADE BY TELEDYNE TABER, 455 BRYANT STREET NORTH, TONAWANDA, NY, 14120. GOVERNMENT FURNISHED EQUIPMENT AND INSTALLED BY CONTRACTOR
A199442 A199443	PT–278A PT–278B	PRESSURE TRANSDUCER	AIR	TABER PRESSURE TRANSDUCER, MODEL 2911, NASA PART NUMBER 79K38668–A–C–06, MADE BY TELEDYNE TABER, 455 BRYANT STREET NORTH, TONAWANDA, NY, 14120. GOVERNMENT FURNISHED EQUIPMENT AND INSTALLED BY CONTRACTOR
A199461 A199462	PT–288A PT–288B	PRESSURE TRANSDUCER	AIR	TABER PRESSURE TRANSDUCER, MODEL 2911, NASA PART NUMBER 79K38668–A–C–06, MADE BY TELEDYNE TABER, 455 BRYANT STREET NORTH, TONAWANDA, NY, 14120. GOVERNMENT FURNISHED EQUIPMENT AND INSTALLED BY CONTRACTOR
A199480 A199481	PT–298A PT–298B	PRESSURE TRANSDUCER	AIR	TABER PRESSURE TRANSDUCER, MODEL 2911, NASA PART NUMBER 79K38668–A–C–06, MADE BY TELEDYNE TABER, 455 BRYANT STREET NORTH, TONAWANDA, NY, 14120. GOVERNMENT FURNISHED EQUIPMENT AND INSTALLED BY CONTRACTOR
A199251 A199252	PT–308A PT–308B	PRESSURE TRANSDUCER	AIR	TABER PRESSURE TRANSDUCER, MODEL 2911, NASA PART NUMBER 79K38668–A–C–06, MADE BY TELEDYNE TABER, 455 BRYANT STREET NORTH, TONAWANDA, NY, 14120. GOVERNMENT FURNISHED EQUIPMENT AND INSTALLED BY CONTRACTOR
A199272 A199273	PT–318A PT–318B	PRESSURE TRANSDUCER	AIR	TABER PRESSURE TRANSDUCER, MODEL 2911, NASA PART NUMBER 79K38668–A–C–06, MADE BY TELEDYNE TABER, 455 BRYANT STREET NORTH, TONAWANDA, NY, 14120. GOVERNMENT FURNISHED EQUIPMENT AND INSTALLED BY CONTRACTOR
A199188 A199289	TE–102A TE–102B	TEMPERATURE ELEMENT	AIR	NASA PART NUMBER 79K03040B120S, MADE BY SCIENTIFIC INSTRUMENTS, INC., 4400 W. TIFFANY DRIVE, WEST PALM BEACH, FL, 33407. THERMOWELL SHALL BE PROVIDED. GOVERNMENT FURNISHED EQUIPMENT AND INSTALLED BY CONTRACTOR
A199191 A199192	TE–103A TE–103B	TEMPERATURE ELEMENT	AIR	NASA PART NUMBER 79K03040B120S, MADE BY SCIENTIFIC INSTRUMENTS, INC., 4400 W. TIFFANY DRIVE, WEST PALM BEACH, FL, 33407. THERMOWELL SHALL BE PROVIDED. GOVERNMENT FURNISHED EQUIPMENT AND INSTALLED BY CONTRACTOR
A199202 A199203	TE–112A TE–112B	TEMPERATURE ELEMENT	AIR	NASA PART NUMBER 79K03040B120S, MADE BY SCIENTIFIC INSTRUMENTS, INC., 4400 W. TIFFANY DRIVE, WEST PALM BEACH, FL, 33407. THERMOWELL SHALL BE PROVIDED. GOVERNMENT FURNISHED EQUIPMENT AND INSTALLED BY CONTRACTOR
A199205 A199206	TE–113A TE–113B	TEMPERATURE ELEMENT	AIR	NASA PART NUMBER 79K03040B120S, MADE BY SCIENTIFIC INSTRUMENTS, INC., 4400 W. TIFFANY DRIVE, WEST PALM BEACH, FL, 33407. THERMOWELL SHALL BE PROVIDED. GOVERNMENT FURNISHED EQUIPMENT AND INSTALLED BY CONTRACTOR
A199224 A199225	TE–122A TE–122B	TEMPERATURE ELEMENT	AIR	NASA PART NUMBER 79K03040B120S, MADE BY SCIENTIFIC INSTRUMENTS, INC., 4400 W. TIFFANY DRIVE, WEST PALM BEACH, FL, 33407. THERMOWELL SHALL BE PROVIDED. GOVERNMENT FURNISHED EQUIPMENT AND INSTALLED BY CONTRACTOR
A199227 A199228	TE–123A TE–123B	TEMPERATURE ELEMENT	AIR	NASA PART NUMBER 79K03040B120S, MADE BY SCIENTIFIC INSTRUMENTS, INC., 4400 W. TIFFANY DRIVE, WEST PALM BEACH, FL, 33407. THERMOWELL SHALL BE PROVIDED. GOVERNMENT FURNISHED EQUIPMENT AND INSTALLED BY CONTRACTOR

CHILLER SCHEDULE 2

A NO.	DEVICE NO.	LOCATION	UNIT NOMINAL TONNAGE	REFRIGERANT		COOLING EFFICIENCY				NO. COMPRESSORS	EVAPORATOR					CONDENSER					MOTORS (EACH)				SOUND PRESSURE (dBA)	REMARKS
				TYPE	CHARGE (LB.)	FULL LOAD (kW/TON)	FULL LOAD EER	IPLV (kW/TON)	IPLV EER		NOM. FLOW RATE (GPM)	EWT (DEG F)	LWT (DEG F)	MAX. PD (FT. H20)	NO. PASSES	NOM. FLOW RATE (GPM)	EWT (DEG F)	LWT (DEG F)	MAX. PD (FT. H20)	NO. PASSES	POWER (kW)	V / PH	CURRENT (AMPS) MCA	MOP		
A201166	CH–501	ECS ROOM	275	R–134A	1113	0.899	13.36	0.899	20.9	2	721,6	41	31	9.7	2	835	95.0	105.0	7.4	2	247.1	480 / 3	400	600	85	DUNHAM BUSH WATER COOLED PACKAGE CHILLER, MODEL WCFX46TAR8DRM5R OR APPROVED EQUAL. CHILLER SHALL BE PROVIDED WITH METERING CONTROL VALVE A201214 AS SPECIFIED ON DRAWING M–033.
A201167	CH–502	ECS ROOM	275	R–134A	1113	0.899	13.36	0.899	20.9	2	721,6	41	31	9.7	2	835	95.0	105.0	7.4	2	247.1	480 / 3	400	600	85	DUNHAM BUSH WATER COOLED PACKAGE CHILLER, MODEL WCFX46TAR8DRM5R OR APPROVED EQUAL. CHILLER SHALL BE PROVIDED WITH METERING CONTROL VALVE A201215 AS SPECIFIED ON DRAWING M–033.
A201168	CH–503	ECS ROOM	275	R–134A	1113	0.899	13.36	0.899	20.9	2	721,6	41	31	9.7	2	835	95.0	105.0	7.4	2	247.1	480 / 3	400	600	85	DUNHAM BUSH WATER COOLED PACKAGE CHILLER, MODEL WCFX46TAR8DRM5R OR APPROVED EQUAL. CHILLER SHALL BE PROVIDED WITH METERING CONTROL VALVE A201216 AS SPECIFIED ON DRAWING M–033.

VALVE SCHEDULE – WATER GLYCOL, CONDENSER WATER, STEAM, & CONDENSATE

A NO.	DEVICE NO.	LOCATION	VALVE TYPE	VALVE SIZE	SERVICE	GPM	LBS/HR	Cv	PORT	BODY	FLANGE	LIMIT SWITCH	ACTUATOR TYPE	V / PH @ 60 Hz	REMARKS
A201163	TCV–517	NORTH COOLING CHAMBER	3–WAY	4"	WATER GLYCOL	590	–	430	90 deg	SS	150#	NO	MODULATING	120 / 1	VALVE: SHARPE 7766MT4D9 SS BODY, 316 SS BALL/STEM, TFM SEATS, TFE SEALS, CS 150# RF FLANGE; ACTUATOR: KEYSTONE E051A4W5P10 EPI2 ELECTRIC ACTUATOR, NEMA 4, 4–20 mA CONTROL SIGNAL AND POSITION TRANSMITTER OR APPROVED EQUAL.
A201164	TCV–518	SOUTH COOLING CHAMBER	3–WAY	4"	WATER GLYCOL	590	–	430	90 deg	SS	150#	NO	MODULATING	120 / 1	VALVE: SHARPE 7766MT4D9 SS BODY, 316 SS BALL/STEM, TFM SEATS, TFE SEALS, CS 150# RF FLANGE; ACTUATOR: KEYSTONE E051A4W5P10 EPI2 ELECTRIC ACTUATOR, NEMA 4, 4–20 mA CONTROL SIGNAL AND POSITION TRANSMITTER OR APPROVED EQUAL.
A201165	TCV–519	ICPS COOLING CHAMBER	3–WAY	2.5"	WATER GLYCOL	150	–	160	90 deg	SS	150#	NO	MODULATING	120 / 1	VALVE: SHARPE 7766MT4D9 SS BODY, 316 SS BALL/STEM, TFM SEATS, TFE SEALS, CS 150# RF FLANGE; ACTUATOR: KEYSTONE E051A4W5P10 EPI2 ELECTRIC ACTUATOR, NEMA 4, 4–20 mA CONTROL SIGNAL AND POSITION TRANSMITTER OR APPROVED EQUAL.
A201357 A201358	FCV–213A FCV–213B	CIRCUIT 2–N (CS/IU)	BALL	3/4"	STEAM	–	25.7	19	0.69 IN	CS	150#	NO	MODULATING	120 / 1	VALVE: METSO 3/4" 7150–11–2236TTT CS BODY, 316 SS BALL/STEM, PTFE SEATS, PTFE SEALS; ACTUATOR: VW150CIS2ZN–115AC ELECTRIC ACTUATOR, NEMA 4, 4–20 mA CONTROL SIGNAL AND POSITION TRANSMITTER WITH MANUAL OVERRIDE OR APPROVED EQUAL.
A201361 A201362	FCV–223A FCV–223B	CIRCUIT 1–N (SM/SA)	BALL	3/4"	STEAM	–	25.7	19	0.69 IN	CS	150#	NO	MODULATING	120 / 1	VALVE: METSO 3/4" 7150–11–2236TTT CS BODY, 316 SS BALL/STEM, PTFE SEATS, PTFE SEALS; ACTUATOR: VW150CIS2ZN–115AC ELECTRIC ACTUATOR, NEMA 4, 4–20 mA CONTROL SIGNAL AND POSITION TRANSMITTER WITH MANUAL OVERRIDE OR APPROVED EQUAL.
A201365 A201366	FCV–233A FCV–233B	CIRCUIT 7–N (CS/AFT)	BALL	3/4"	STEAM	–	38.5	19	0.69 IN	CS	150#	NO	MODULATING	120 / 1	VALVE: METSO 3/4" 7150–11–2236TTT CS BODY, 316 SS BALL/STEM, PTFE SEATS, PTFE SEALS; ACTUATOR: VW150CIS2ZN–115AC ELECTRIC ACTUATOR, NEMA 4, 4–20 mA CONTROL SIGNAL AND POSITION TRANSMITTER WITH MANUAL OVERRIDE OR APPROVED EQUAL.
A201373 A201374	FCV–273A FCV–273B	CIRCUIT 8–S (CS/ENG)	BALL	3/4"	STEAM	–	32.1	19	0.69 IN	CS	150#	NO	MODULATING	120 / 1	VALVE: METSO 3/4" 7150–11–2236TTT CS BODY, 316 SS BALL/STEM, PTFE SEATS, PTFE SEALS; ACTUATOR: VW150CIS2ZN–115AC ELECTRIC ACTUATOR, NEMA 4, 4–20 mA CONTROL SIGNAL AND POSITION TRANSMITTER WITH MANUAL OVERRIDE OR APPROVED EQUAL.
A201377 A201378	FCV–303A FCV–303B	CIRCUIT 3–L (ICPS)	BALL	3/4"	STEAM	–	22.5	19	0.69 IN	CS	150#	NO	MODULATING	120 / 1	VALVE: METSO 3/4" 7150–11–2236TTT CS BODY, 316 SS BALL/STEM, PTFE SEATS, PTFE SEALS; ACTUATOR: VW150CIS2ZN–115AC ELECTRIC ACTUATOR, NEMA 4, 4–20 mA CONTROL SIGNAL AND POSITION TRANSMITTER WITH MANUAL OVERRIDE OR APPROVED EQUAL.
A201351 A201352	SOV–603A SOV–603B	NORTH BOILER	SOLENOID	3/4"	STEAM/COND	–	–	8.8	FULL	BRASS	NPT	NO	SOLENOID	24VDC	BRASS BODY, SS INTERNALS, PTFE SEALS AND DISCS, COPPER COIL, 24VDC, NORMALLY CLOSED. ASCO 8220G408 OR APPROVED EQUAL.
A201353 A201354	SOV–604A SOV–604B	NORTH BOILER	SOLENOID	3/4"	STEAM/COND	–	–	8.8	FULL	BRASS	NPT	NO	SOLENOID	24VDC	BRASS BODY, SS INTERNALS, PTFE SEALS AND DISCS, COPPER COIL, 24VDC, NORMALLY CLOSED. ASCO 8220G408 OR APPROVED EQUAL.
A201367 A201368	SOV–605A SOV–605B	SOUTH BOILER	SOLENOID	3/4"	STEAM/COND	–	–	8.8	FULL	BRASS	NPT	NO	SOLENOID	24VDC	BRASS BODY, SS INTERNALS, PTFE SEALS AND DISCS, COPPER COIL, 24VDC, NORMALLY CLOSED. ASCO 8220G408 OR APPROVED EQUAL.
A201369 A201370	SOV–606A SOV–606B	SOUTH BOILER	SOLENOID	3/4"	STEAM/COND	–	–	8.8	FULL	BRASS	NPT	NO	SOLENOID	24VDC	BRASS BODY, SS INTERNALS, PTFE SEALS AND DISCS, COPPER COIL, 24VDC, NORMALLY CLOSED. ASCO 8220G408 OR APPROVED EQUAL.
A201355 A201356	SOV–214A SOV–214B	CIRCUIT 2–N (CS/IU)	SOLENOID	3/4"	STEAM/COND	–	25.7	8.8	FULL	BRASS	NPT	NO	SOLENOID	24VDC	BRASS BODY, SS INTERNALS, PTFE SEALS AND DISCS, COPPER COIL, 24VDC, NORMALLY CLOSED. ASCO 8220G408 OR APPROVED EQUAL.
A201359 A201360	SOV–224A SOV–224B	CIRCUIT 1–N (SM/SA)	SOLENOID	3/4"	STEAM/COND	–	25.7	8.8	FULL	BRASS	NPT	NO	SOLENOID	24VDC	BRASS BODY, SS INTERNALS, PTFE SEALS AND DISCS, COPPER COIL, 24VDC, NORMALLY CLOSED. ASCO 8220G408 OR APPROVED EQUAL.
A201363 A201364	SOV–234A SOV–234B	CIRCUIT 7–N (CS/AFT)	SOLENOID	3/4"	STEAM/COND	–	38.5	8.8	FULL	BRASS	NPT	NO	SOLENOID	24VDC	BRASS BODY, SS INTERNALS, PTFE SEALS AND DISCS, COPPER COIL, 24VDC, NORMALLY CLOSED. ASCO 8220G408 OR APPROVED EQUAL.
A201371 A201372	SOV–274A SOV–274B	CIRCUIT 8–S (CS/ENG)	SOLENOID	3/4"	STEAM/COND	–	32.1	8.8	FULL	BRASS	NPT	NO	SOLENOID	24VDC	BRASS BODY, SS INTERNALS, PTFE SEALS AND DISCS, COPPER COIL, 24VDC, NORMALLY CLOSED. ASCO 8220G408 OR APPROVED EQUAL.
A201375 A201376	SOV–304A SOV–304B	CIRCUIT 3–L (ICPS)	SOLENOID	3/4"	STEAM/COND	–	22.5	8.8	FULL	BRASS	NPT	NO	SOLENOID	24VDC	BRASS BODY, SS INTERNALS, PTFE SEALS AND DISCS, COPPER COIL, 24VDC, NORMALLY CLOSED. ASCO 8220G408 OR APPROVED EQUAL.
A536700 A536702	FCV–415	COOLING TOWER BY–PASS	3–WAY	10"	CONDENSER WATER	2095	–	–	FULL	CS	150#	NO	MODULATING	–	KEYSTONE SERIES GRL–D32E–A1–K BUTTERFLY VALVES, DUCTILE IRON, LUGGED STYLE, ALUMINUM–BRONZE DISC, 431 SS STEM, EPDM SEAT (2). MORIN B135–U–S080 PNEUMATIC ACTUATOR, SPRING RETURN (80 PSI), MECHANICAL LINKAGE/MOUNTING KIT CONNECTING TWO VALVES, WESTLOCK K10–N–N–H–OEF ELECTRO PNEUMATIC ANALOG VALVE POSITIONER, 4–20 mA SIGNAL OUTPUT AND 4–20 mA FEEDBACK, 10"X10"X10" 125# CAST IRON TEE OR APPROVED EQUAL.

PUMP SCHEDULE

A NO.	DEVICE NO.	LOCATION	SERVICE	GPM	HEAD (FT)	TYPE	MIN. EFF. (%)	SUCTION SIZE (IN)	DISCHARGE SIZE (IN)	MOTOR HP	MOTOR RPM	MOTOR V / PH	MOTOR ENC.	REMARKS
A6655	P–411	OUTDOOR	CONDENSER WATER	2,095	80	ANSI CENTRIFUGAL	85.0	12	10	60	1800	460 / 3	TEFC	GOULDS MODEL 3410–L OR APPROVED EQUAL. (PHYSICAL LAYOUT OF NEW PUMP AND MOTOR SHALL MATCH EXISTING CONFIGURATION).
A6656	P–412	OUTDOOR	CONDENSER WATER	2,095	80	ANSI CENTRIFUGAL	85.0	12	10	60	1800	460 / 3	TEFC	GOULDS MODEL 3410–L OR APPROVED EQUAL. (PHYSICAL LAYOUT OF NEW PUMP AND MOTOR SHALL MATCH EXISTING CONFIGURATION).
A6872	P–511	ECS ROOM	CHILLED GLYCOL WATER	1,330	100	ANSI CENTRIFUGAL	76.0	8	6	50	1800	460 / 3	TEFC	GOULDS MODEL 3410–M OR APPROVED EQUAL. (PHYSICAL LAYOUT OF NEW PUMP AND MOTOR SHALL MATCH EXISTING CONFIGURATION).
A6878	P–512	ECS ROOM	CHILLED GLYCOL WATER	1,330	100	ANSI CENTRIFUGAL	76.0	8	6	50	1800	460 / 3	TEFC	GOULDS MODEL 3410–M OR APPROVED EQUAL. (PHYSICAL LAYOUT OF NEW PUMP AND MOTOR SHALL MATCH EXISTING CONFIGURATION).
A201384	P–617	ECS ROOM	CONDENSER WATER	–	–	ELECTRIC CONDENSATE	–	1	3/4	1/3	3450	115 / 1	–	WATSON MCDANIEL SERIES 4222GDA, DUPLEX, 3 GPM @ 20 PSI OR APPROVED EQUAL.
A201385	P–637	ECS ROOM	CONDENSER WATER	–	–	ELECTRIC CONDENSATE	–	1	3/4	1/3	3450	115 / 1	–	WATSON MCDANIEL SERIES 4222GDA, DUPLEX, 3 GPM @ 20 PSI OR APPROVED EQUAL.
A201386	P–647	ECS ROOM	CONDENSER WATER	–	–	ELECTRIC CONDENSATE	–	1	3/4	1/3	3450	115 / 1	–	WATSON MCDANIEL SERIES 4222GDA, DUPLEX, 3 GPM @ 20 PSI OR APPROVED EQUAL.

GN2 PRESSURE REDCUING STATIONS

A NO.	DEVICE NO.	VALVE TYPE	VALVE SIZE	AIR FLOW (LBS/MIN)	PORT	BODY	ACTUATOR TYPE	V / PH @ 60 Hz	REMARKS
A201509 (A6837) (5049A54)	MOV–701A	BUTTERFLY	14"	250 – 1050	FULL	CS	OPEN / CLOSE	120 / 1	EXISTING TYCO VALVE, NASA PART NUMBER 100–141N (GN2) ELEC, 75M15214–PBFV–24 FSN, 482000–BE10622, NEW MOTROIZED BIFFI ICON 2000 ELECTRIC ACTUATOR OR APPROVED EQUAL, 120 VAC SINGLE PHASE CONTROL POWER TO MOTORIZED ACTUATOR, 24 VDC OPEN AND CLOSE CONTROL SIGNALS WITH 24 VDC SOURCED FROM ACTUATOR. FULL OPEN AND FULL CLOSE 24 VDC DRY CONTACTS FOR POSITION INDICATION. THE SEAT AND SEAL SHALL BE REPLACED.
A201510 (A6836) (5049A55)	MOV–701B	BUTTERFLY	14"	250 – 1050	FULL	CS	OPEN / CLOSE	120 / 1	EXISTING TYCO VALVE, NASA PART NUMBER 100–141N (GN2) ELEC, 75M15214–PBFV–24 FSN, 482000–BE10622, NEW MOTROIZED BIFFI ICON 2000 ELECTRIC ACTUATOR OR APPROVED EQUAL, 120 VAC SINGLE PHASE CONTROL POWER TO MOTORIZED ACTUATOR, 24 VDC OPEN AND CLOSE CONTROL SIGNALS WITH 24 VDC SOURCED FROM ACTUATOR. FULL OPEN AND FULL CLOSE 24 VDC DRY CONTACTS FOR POSITION INDICATION. THE SEAT AND SEAL SHALL BE REPLACED.
A199543 (A6833) (A508864) (5049A322)	PRV–702A	BUTTERFLY	14"	250 – 1050	FULL	CS	CONTROL	120 / 1	EXISTING DRESSER PRESSURE REGULATING VALVE AND PNEUMATIC ACTUATOR, NASA PART NUMBER 37–10132 W/.02, 3–18 79K07777–H40–A/79K07849–PPR–1A. NEW MASONEILAN SVI II ADVANCED PERFORMANCE DIGITAL VALVE POSITIONER OR APPROVED EQUAL, 120 VAC SINGLE PHASE CONTROL POWER TO PNEUMATIC ACTUATOR, 4–20 mA VALVE POSITION CONTROL AND 4–20 mA POSITION FEEDBACK FOR VALVE POSITION. THE VALVE SEAT AND SEAL HAVE TO BE CONFIGURED TO PROVIDE 1000 LB/MIN FLOW, INLET PRESSURE AT 150 PSIG AND OUTLET PRESSURE AT 4 PSIG.
A199544 (A6832) (A508863) (5049A323)	PRV–702B	BUTTERFLY	14"	250 – 1050	FULL	CS	CONTROL	120 / 1	EXISTING DRESSER PRESSURE REGULATING VALVE AND PNEUMATIC ACTUATOR, NASA PART NUMBER 37–10132 W/.02, 3–18 79K07777–H40–A/79K07849–PPR–1A. NEW MASONEILAN SVI II ADVANCED PERFORMANCE DIGITAL VALVE POSITIONER OR APPROVED EQUAL, 120 VAC SINGLE PHASE CONTROL POWER TO PNEUMATIC ACTUATOR, 4–20 mA VALVE POSITION CONTROL AND 4–20 mA POSITION FEEDBACK FOR VALVE POSITION. THE VALVE SEAT AND SEAL HAVE TO BE CONFIGURED TO TO PROVIDE 1000 LB/MIN FLOW, INLET PRESSURE AT 150 PSIG AND OUTLET PRESSURE AT 4 PSIG.
A201511	–	BALL	1/2"	–	FULL	BRONZE	ISOLATION	–	NIBCO BALL VALVE, MODEL T–585–70 THREADED OR APPROVED EQUAL.
A201512	–	BALL	1/2"	–	FULL	BRONZE	ISOLATION	–	NIBCO BALL VALVE, MODEL T–585–70 THREADED OR APPROVED EQUAL.

INSTRUMENTATION SCHEDULE – WATER GLYCOL & CONDENSER WATER

A NO.	DEVICE NO.	DESCRIPTION	SERVICE	REMARKS
A6665	PS–415	PRESSURE SWITCH	CONDENSER WATER	ASCO H SERIES MINATURE ADJUSTABLE PRESSURE SWITCH, MODEL HB10A214 WITH TWO N.O. FORM C CONTACTS OR APPROVED EQUAL.
A6666	PS–416	PRESSURE SWITCH	CONDENSER WATER	ASCO H SERIES MINATURE ADJUSTABLE PRESSURE SWITCH, MODEL HB10A214 WITH TWO N.O. FORM C CONTACTS OR APPROVED EQUAL.
A6871	PS–513	PRESSURE SWITCH	WATER GLYCOL	ASCO H SERIES MINATURE ADJUSTABLE PRESSURE SWITCH, MODEL HC20A214 WITH TWO N.O. FORM C CONTACTS OR APPROVED EQUAL.
A6879	PS–514	PRESSURE SWITCH	WATER GLYCOL	ASCO H SERIES MINATURE ADJUSTABLE PRESSURE SWITCH, MODEL HC20A214 WITH TWO N.O. FORM C CONTACTS OR APPROVED EQUAL.
A201156 A201157	PT–505A PT–505B	PRESSURE TRANSDUCER	WATER GLYCOL	TABER PRESSURE TRANSDUCER, MODEL 2911, NASA PART NUMBER 79K38668–A–C–13, MADE BY TELEDYNE TABER, 455 BRYANT STREET NORTH, TONAWANDA, NY, 14120. GOVERNMENT FURNISHED EQUIPMENT AND INSTALLED BY CONTRACTOR
A6675 A6676	TE–414A TE–414B	TEMPERATURE ELEMENT	CONDENSER WATER	NASA PART NUMBER 79K03040B120S, MADE BY SCIENTIFIC INSTRUMENTS, INC., 4400 W. TIFFANY DRIVE, WEST PALM BEACH, FL, 33407. THERMOWELL SHALL BE PROVIDED. GOVERNMENT FURNISHED EQUIPMENT AND INSTALLED BY CONTRACTOR
A201158 A201159	TE–506A TE–506B	TEMPERATURE ELEMENT	WATER GLYCOL	NASA PART NUMBER 79K03040B120S, MADE BY SCIENTIFIC INSTRUMENTS, INC., 4400 W. TIFFANY DRIVE, WEST PALM BEACH, FL, 33407. THERMOWELL SHALL BE PROVIDED. GOVERNMENT FURNISHED EQUIPMENT AND INSTALLED BY CONTRACTOR

ORIFICE PLATE/FLOWMETER – GLYCOL WATER & CONDENSER WATER

A NO.	DEVICE NO.	SERVICE	GPM	SIZE	REMARKS
A503625	OP–413 DPT–417A DPT–417B	CONDENSER WATER	2,095	10"	DANIEL RAISED FACE WELD NECK ORIFICE FLANGES WITH ROSEMOUNT 405 ELEMENT, 0.45 SQ. FT. BORE AREA, MAX PRESSURE DROP 0.5 FT H20 OR APPROVED EQUAL. TWO DIFFERENTIAL PRESSURE TRANSMITTERS NASA PART NUMBER 79K38668BC04 GOVERNMENT FURNISHED EQUIPMENT AND INSTALLED BY CONTRACTOR
A201190	OP–515 DPT–516A DPT–516B	WATER GLYCOL	1,330	8"	DANIEL RAISED FACE WELD NECK ORIFICE FLANGES WITH ROSEMOUNT 405 ELEMENT, 0.20 SQ. FT. BORE AREA, MAX PRESSURE DROP 3.0 FT H20 OR APPROVED EQUAL. TWO DIFFERENTIAL PRESSURE TRANSMITTERS NASA PART NUMBER 79K38668BC04 GOVERNMENT FURNISHED EQUIPMENT AND INSTALLED BY CONTRACTOR

FLOWMETER – AIR/GN2

A NO.	DEVICE NO.	SERVICE	PURGE CIRCUIT	AIR FLOW (LBS/MIN)	SIZE	REMARKS
A199285	FM–207 DPT–207A DPT–207B	AIR	6–N, CS/IT	50 – 225	14"	WYATT VENTURI MODEL LVM WITH 150# FLANGED END CONNECTIONS CONSTRUCTED FROM FRP, CARBON STEEL AND 304L STAINLESS STEEL OR APPROVED EQUAL. TWO DIFFERENTIAL PRESSURE TRANSMITTERS NASA PART NUMBER 79K38668BC05 GOVERNMENT FURNISHED EQUIPMENT AND INSTALLED BY CONTRACTOR
A199308	FM–217 DPT–217A DPT–217B	AIR	2–N, CS/FS	50 – 200	14"	WYATT VENTURI MODEL LVM WITH 150# FLANGED END CONNECTIONS CONSTRUCTED FROM FRP, CARBON STEEL AND 304L STAINLESS STEEL OR APPROVED EQUAL. TWO DIFFERENTIAL PRESSURE TRANSMITTERS NASA PART NUMBER 79K38668BC05 GOVERNMENT FURNISHED EQUIPMENT AND INSTALLED BY CONTRACTOR
A199331	FM–227 DPT–227A DPT–227B	AIR	1–N, SM	50 – 200	14"	WYATT VENTURI MODEL LVM WITH 150# FLANGED END CONNECTIONS CONSTRUCTED FROM FRP, CARBON STEEL AND 304L STAINLESS STEEL OR APPROVED EQUAL. TWO DIFFERENTIAL PRESSURE TRANSMITTERS NASA PART NUMBER 79K38668BC05 GOVERNMENT FURNISHED EQUIPMENT AND INSTALLED BY CONTRACTOR
A199375	FM–237 DPT–237A DPT–237B	AIR	7–N, CS/AFT	50 – 300	16"	WYATT VENTURI MODEL LVM WITH 150# FLANGED END CONNECTIONS CONSTRUCTED FROM FRP, CARBON STEEL AND 304L STAINLESS STEEL OR APPROVED EQUAL. TWO DIFFERENTIAL PRESSURE TRANSMITTERS NASA PART NUMBER 79K38668BC05 GOVERNMENT FURNISHED EQUIPMENT AND INSTALLED BY CONTRACTOR
A199352	FM–247 DPT–247A DPT–247B	AIR	5–N, SPARE	50 – 125	10"	WYATT VENTURI MODEL LVM WITH 150# FLANGED END CONNECTIONS CONSTRUCTED FROM FRP, CARBON STEEL AND 304L STAINLESS STEEL OR APPROVED EQUAL. TWO DIFFERENTIAL PRESSURE TRANSMITTERS NASA PART NUMBER 79K38668BC05 GOVERNMENT FURNISHED EQUIPMENT AND INSTALLED BY CONTRACTOR
A199394	FM–257 DPT–257A DPT–257B	AIR	12–S, LAS	50 – 150	12"	WYATT VENTURI MODEL LVM WITH 150# FLANGED END CONNECTIONS CONSTRUCTED FROM FRP, CARBON STEEL AND 304L STAINLESS STEEL OR APPROVED EQUAL. TWO DIFFERENTIAL PRESSURE TRANSMITTERS NASA PART NUMBER 79K38668BC05 GOVERNMENT FURNISHED EQUIPMENT AND INSTALLED BY CONTRACTOR
A199413	FM–267 DPT–267A DPT–267B	AIR	11–S, EC/CC	50 – 150	12"	WYATT VENTURI MODEL LVM WITH 150# FLANGED END CONNECTIONS CONSTRUCTED FROM FRP, CARBON STEEL AND 304L STAINLESS STEEL OR APPROVED EQUAL. TWO DIFFERENTIAL PRESSURE TRANSMITTERS NASA PART NUMBER 79K38668BC05 GOVERNMENT FURNISHED EQUIPMENT AND INSTALLED BY CONTRACTOR
A199436	FM–277 DPT–277A DPT–277B	AIR	8–S, CS/ENG	50 – 250	14"	WYATT VENTURI MODEL LVM WITH 150# FLANGED END CONNECTIONS CONSTRUCTED FROM FRP, CARBON STEEL AND 304L STAINLESS STEEL OR APPROVED EQUAL. TWO DIFFERENTIAL PRESSURE TRANSMITTERS NASA PART NUMBER 79K38668BC05 GOVERNMENT FURNISHED EQUIPMENT AND INSTALLED BY CONTRACTOR
A199455	FM–287 DPT–287A DPT–287B	AIR	9–S, SPARE	50 – 250	14"	WYATT VENTURI MODEL LVM WITH 150# FLANGED END CONNECTIONS CONSTRUCTED FROM FRP, CARBON STEEL AND 304L STAINLESS STEEL OR APPROVED EQUAL. TWO DIFFERENTIAL PRESSURE TRANSMITTERS NASA PART NUMBER 79K38668BC05 GOVERNMENT FURNISHED EQUIPMENT AND INSTALLED BY CONTRACTOR
A199474	FM–297 DPT–297A DPT–297B	AIR	10–S, SPARE	50 – 250	14"	WYATT VENTURI MODEL LVM WITH 150# FLANGED END CONNECTIONS CONSTRUCTED FROM FRP, CARBON STEEL AND 304L STAINLESS STEEL OR APPROVED EQUAL. TWO DIFFERENTIAL PRESSURE TRANSMITTERS NASA PART NUMBER 79K38668BC05 GOVERNMENT FURNISHED EQUIPMENT AND INSTALLED BY CONTRACTOR
A199245	FM–307 DPT–307A DPT–307B	AIR	3–L, ICPS	50 – 175	12"	WYATT VENTURI MODEL LVM WITH 150# FLANGED END CONNECTIONS CONSTRUCTED FROM FRP, CARBON STEEL AND 304L STAINLESS STEEL OR APPROVED EQUAL. TWO DIFFERENTIAL PRESSURE TRANSMITTERS NASA PART NUMBER 79K38668BC05 GOVERNMENT FURNISHED EQUIPMENT AND INSTALLED BY CONTRACTOR
A199266	FM–317 DPT–317A DPT–317B	AIR	4–L, SPARE	50 – 75	8"	WYATT VENTURI MODEL LVM WITH 150# FLANGED END CONNECTIONS CONSTRUCTED FROM FRP, CARBON STEEL AND 304L STAINLESS STEEL OR APPROVED EQUAL. TWO DIFFERENTIAL PRESSURE TRANSMITTERS NASA PART NUMBER 79K38668BC05 GOVERNMENT FURNISHED EQUIPMENT AND INSTALLED BY CONTRACTOR

NOTES:

1. ALL ITEMS NOTED WITH NASA PART NUMBERS (PRESSURE TRANSDUCERS, DIFFERENTIAL PRESSURE TRANSMITTERS, MOISTURE & TEMPERATURE TRANSMITTERS, AND TEMPERATURE ELEMENTS) WILL BE GOVERNMENT FURNISHED EQUIPMENT – PROVIDED BY OTHER, INSTALLED BY CONTRACTOR.

2. SEE SPECIFICATION SECTION 23 FOR SPECIAL EMI ENCLOSURE REQUIREMENTS.

EO–1–79K39602

SYM	ZONE	DESCRIPTION	DATE	APPROVED
REVISIONS				

JACOBS™
Jacobs Technology Inc.

SIGNATURES		DATE
DRAWN	MIKE VANHOOSE	3/07/14
CHECKED	BRIAN GODFREY	4/01/14
SUBMITTED	RAVI MUTHIAH	4/01/14
ST OF LICENSURE: FL LICENSE NO: 68076		
APPROVED	GLEN WARD	4/01/14
	DREW GILLESPIE	4/01/14

NATIONAL AERONAUTICS AND SPACE ADMINISTRATION
JOHN F. KENNEDY SPACE CENTER, NASA
KENNEDY SPACE CENTER, FLORIDA

KSC LAUNCH PAD 39-B
ENVIRONMENTAL CONTROL SYSTEM (ECS) REFURBISHMENT

MECHANICAL INSTALLATION EQUIPMENT SCHEDULES CONTINUED

M-046

FILE NO.	SIZE	DWG.NO.	REV
	F	79K39602	
PCN. NO. 98898		SHEET 49 OF 187	

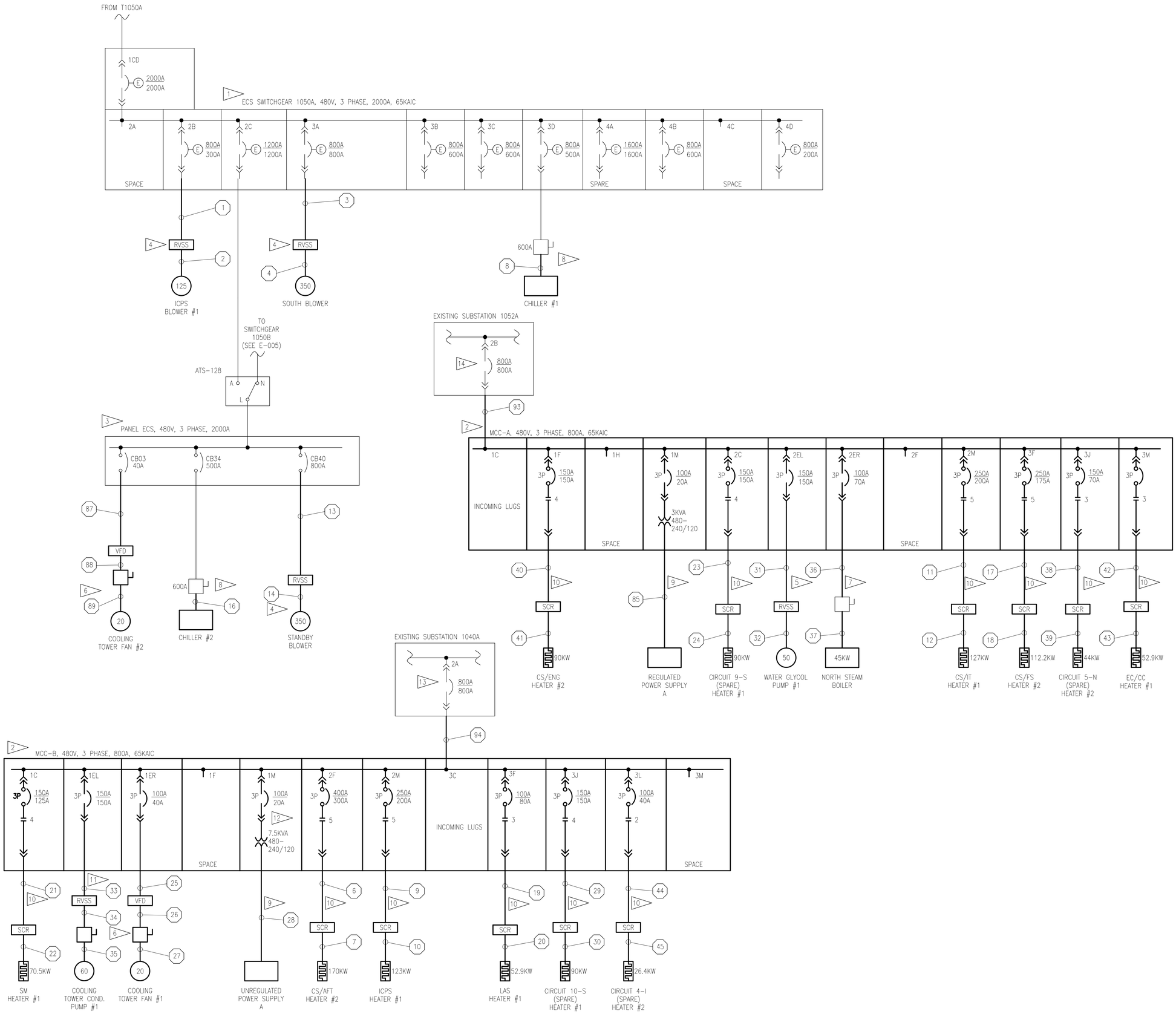

NOTES:

1. ECS SWITCHGEAR 1050A IS AN EXISTING EATON CUTLER HAMMER MAGNUM DS SWITCHGEAR. THIS SWITCHGEAR IS EQUIPPED WITH A BREAKER LIFTING DEVICE MOUNTED ON RAILS ON TOP OF THE SWITCHGEAR.
2. MCC-A AND MCC-B ARE NEW. CONTRACTOR MAY USE ANY EXISTING UNITS SHOWN FOR DEMOLITION ON DEMOLITION SHEETS. UNITS FOR REUSE MUST BE THE SAME MANUFACTURER AS THE NEW UNIT, AND THE UNITS MUST BE AN EXACT MATCH OF WHAT IS SHOWN ON THE INSTALLATION SHEET.
3. PANEL ECS IS AN EXISTING PANELBOARD.
4. PROVIDE AND INSTALL CONDUCTOR AND REDUCED VOLTAGE SOFT STARTER. EXTEND OR MODIFY RACEWAY AS NECESSARY. REDUCED VOLTAGE STARTER SHALL BE A SOLID STATE TYPE. ALL SOLID STATE STARTERS SHALL BE FROM THE SAME MANUFACTURER. SEE SCHEMATIC DIAGRAM FOR DETAILS.
5. PROVIDE AND INSTALL CONDUCTORS, CONDUIT, AND REDUCED VOLTAGE MOTOR STARTER. MOTOR STARTER SHALL BE THE SOLID STATE TYPE.
6. PROVIDE AND INSTALL CONDUCTORS, CONDUIT, VFD, AND DISCONNECT SWITCH. REUSE EXISTING CABLE TRAY. DISCONNECT SWITCH SHALL BE LOCATED IN THE SAME LOCATION AS THE EXISTING DISCONNECT. PROVIDE SWITCH WITH AN EARLY BREAK AUXILIARY CONTACT TO DISABLE THE VFD BEFORE DISCONNECTING THE PHASE CONDUCTORS. SWITCH SHALL BE RATED NEMA 4X STAINLESS STEEL.
7. PROVIDE AND INSTALL CONDUCTORS AND BOILER COMPLETE WITH BOILER CONTROLLER. REUSE EXISTING DISCONNECT SWITCH.
8. PROVIDE AND INSTALL CONDUCTORS, CHILLER, AND CHILLER MOTOR STARTER. PROVIDE SKID MOUNTED MOTOR STARTERS. MOTOR STARTERS SHALL USE SOME FORM OF REDUCED VOLTAGE STARTING. RE-USE EXISTING RACEWAY. EXTEND OR MODIFY RACEWAY AS NECESSARY.
9. PROVIDE AND INSTALL CONDUCTORS AND ENCLOSURE. REUSE EXISTING RACEWAY. EXTEND OR MODIFY RACEWAY AS NECESSARY. SEE CONTROLS AND INSTRUMENTATION DRAWINGS FOR DETAILS.
10. PROVIDE AND INSTALL CONDUCTORS, CONDUIT, SCR CONTROLLERS, AND HEATERS. INSTALL NEW CABLE TRAY EXTENSION FOR CONDUCTORS INBOUND TO CONTROLLER. REUSE EXISTING CABLE TRAY FOR OUTBOUND CONDUCTORS. PROVIDE AND INSTALL A NEW ENCLOSURE FOR THE SCR CONTROLLER. MORE THAN ONE CONTROLLER MAY BE REQUIRED DEPENDING ON MANUFACTURER SELECTED.
11. PROVIDE AND INSTALL CONDUCTORS, CONDUIT, DISCONNECT SWITCH, AND REDUCED VOLTAGE MOTOR STARTER. MOTOR STARTER SHALL BE THE SOLID STATE TYPE.
12. ADDITIONAL COMPONENTS REQUIRED FOR THIS UNIT. SEE SHEET I-095.
13. CIRCUIT BREAKER 2A IS AN EXISTING SQUARE D DSII-608 WITH DIGITRIP 810D UNIT. PROVIDE AND INSTALL 800 AMP SENSOR AND RATING PLUG. PROVIDE AND INSTALL NEW LABEL AND NEW LUGS TO ACCOMMODATE CONDUCTORS.
14. CIRCUIT BREAKER 2B IS AN EXISTING SQUARE D NWH1.

EO-1-79K39602

SYM	ZONE	DESCRIPTION	DATE	APPROVED
		REVISIONS		

JACOBS
Jacobs Technology Inc.

NATIONAL AERONAUTICS AND SPACE ADMINISTRATION
JOHN F. KENNEDY SPACE CENTER, NASA
KENNEDY SPACE CENTER, FLORIDA

SIGNATURES		DATE
DRAWN	MARTIN HENNIGH	3/07/14
CHECKED	JERRY HUNT	4/01/14
SUBMITTED	BRIAN GARLAND	4/01/14
ST OF LICENSURE: TN LICENSE NO: 00113330		
APPROVED	GLEN WARD	4/01/14
	DUNG TRANG	4/01/14

KSC LAUNCH PAD 39-B
ENVIRONMENTAL CONTROL SYSTEM (ECS) REFURBISHMENT

SINGLE LINE DIAGRAM
SWGR-A, MCC-A, MCC-B,
AND PANEL ECS INSTALLATION

FILE NO.	SIZE	DWG.NO.	REV
	F	79K39602	
PCN. NO. 98898		SHEET 58 OF 187	

E-004

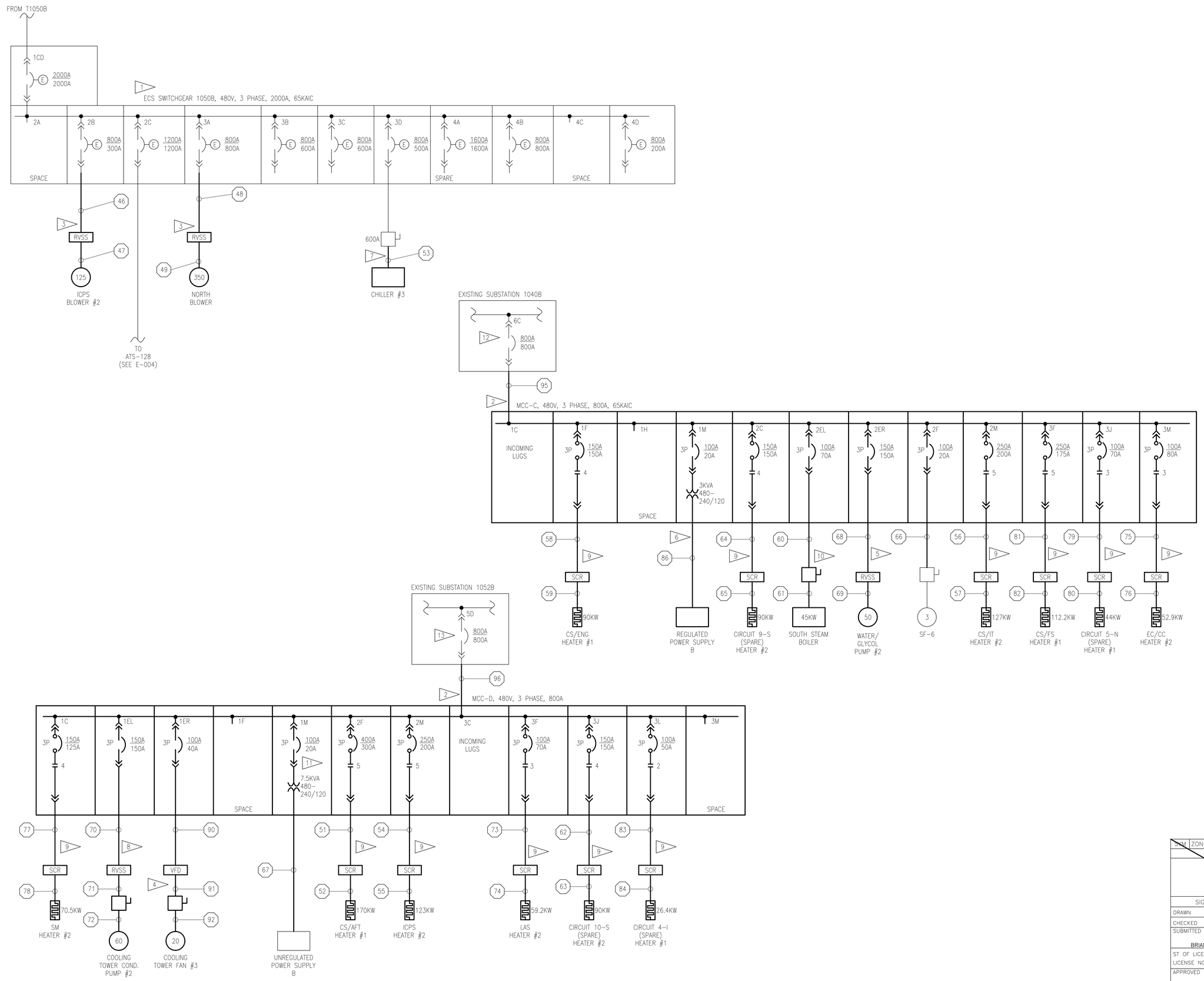

NOTES:

1. ECS SWITCHGEAR 1050B IS AN EXISTING EATON CUTLER HAMMER MAGNUM DS SWITCHGEAR. THIS SWITCHGEAR IS EQUIPPED WITH A BREAKER LIFTING DEVICE MOUNTED ON RAILS ON TOP OF THE SWITCHGEAR.
2. MCC-C AND MCC-D ARE NEW. CONTRACTOR MAY USE ANY EXISTING UNITS SHOWN FOR DEMOLITION ON DEMOLITION SHEETS. UNITS FOR REUSE MUST BE THE SAME MANUFACTURER AS THE NEW UNIT, AND THE UNITS MUST BE AN EXACT MATCH OF WHAT IS SHOWN ON THE INSTALLATION SHEET.
3. PROVIDE AND INSTALL CONDUCTOR AND REDUCED VOLTAGE SOFT STARTER. EXTEND OR MODIFY RACEWAY AS NECESSARY. REDUCED VOLTAGE STARTER SHALL BE A SOLID STATE TYPE. ALL SOLID STATE STARTERS SHALL BE FROM THE SAME MANUFACTURER. SEE SCHEMATIC DIAGRAM FOR DETAILS.
4. PROVIDE AND INSTALL CONDUCTORS, CONDUIT, VFD, AND DISCONNECT SWITCH. REUSE EXISTING CABLE TRAY. DISCONNECT SWITCH SHALL BE LOCATED IN THE SAME LOCATION AS THE EXISTING DISCONNECT. PROVIDE SWITCH WITH AN EARLY BREAK AUXILIARY CONTACT TO DISABLE THE VFD BEFORE DISCONNECTING THE PHASE CONDUCTORS. SWITCH SHALL BE RATED NEMA 4X STAINLESS STEEL.
5. PROVIDE AND INSTALL CONDUCTORS, CONDUIT, AND REDUCED VOLTAGE MOTOR STARTER. MOTOR STARTER SHALL BE THE SOLID STATE TYPE.
6. PROVIDE AND INSTALL CONDUCTORS AND ENCLOSURE. REUSE EXISTING RACEWAY. EXTEND OR MODIFY RACEWAY AS NECESSARY. SEE CONTROLS AND INSTRUMENTATION DRAWINGS FOR DETAILS.
7. PROVIDE AND INSTALL CONDUCTORS, CHILLER, AND CHILLER MOTOR STARTER. PROVIDE SKID MOUNTED MOTOR STARTERS. MOTOR STARTERS SHALL USE SOME FORM OF REDUCED VOLTAGE STARTING. REUSE EXISTING RACEWAY. EXTEND OR MODIFY RACEWAY AS NECESSARY.
8. PROVIDE AND INSTALL CONDUCTORS, CONDUIT, DISCONNECT SWITCH, AND REDUCED VOLTAGE MOTOR STARTER. MOTOR STARTER SHALL BE THE SOLID STATE TYPE.
9. PROVIDE AND INSTALL CONDUCTORS, CONDUIT, SCR CONTROLLERS, AND HEATERS. INSTALL NEW CABLE TRAY EXTENSION FOR CONDUCTORS INBOUND TO CONTROLLER. REUSE EXISTING CABLE TRAY FOR OUTBOUND CONDUCTORS. PROVIDE AND INSTALL A NEW ENCLOSURE FOR THE SCR CONTROLLER. MORE THAN ONE CONTROLLER MAY BE REQUIRED DEPENDING ON MANUFACTURER SELECTED.
10. PROVIDE AND INSTALL CONDUCTORS AND BOILER COMPLETE WITH BOILER CONTROLLER. REUSE EXISTING DISCONNECT SWITCH.
11. ADDITIONAL COMPONENTS REQUIRED FOR THIS UNIT. SEE SHEET I-095.
12. CIRCUIT BREAKER 6C IS AN EXISTING SQUARE D DSII-608 WITH DIGITRIP 810D UNIT. PROVIDE AND INSTALL 800 AMP SENSOR AND RATING PLUG. PROVIDE AND INSTALL NEW LABEL AND NEW LUGS TO ACCOMMODATE CONDUCTORS.
13. CIRCUIT BREAKER 5D IS AN EXISTING SQUARE D NWH1.

E0-1-79K39602

SYM	ZONE	DESCRIPTION	DATE	APPROVED
		REVISIONS		

JACOBS
Jacobs Technology Inc.

SIGNATURES		DATE
DRAWN	MARTIN HENNIGH	3/07/14
CHECKED	JERRY HUNT	4/01/14
SUBMITTED	BRIAN GARLAND	4/01/14
ST OF LICENSURE: TN LICENSE NO: 00113330		
APPROVED	GLEN WARD	4/01/14
	DUNG TRANG	4/01/14

NATIONAL AERONAUTICS AND SPACE ADMINISTRATION
JOHN F. KENNEDY SPACE CENTER, NASA
KENNEDY SPACE CENTER, FLORIDA

KSC LAUNCH PAD 39-B
ENVIRONMENTAL CONTROL SYSTEM (ECS) REFURBISHMENT
SINGLE LINE DIAGRAM
SWGR-B, MCC-C, AND MCC-D
INSTALLATION

E-005

FILE NO. | SIZE F | DWG.NO. 79K39602 | REV
PCN. NO. 98898 | SHEET 59 OF 187

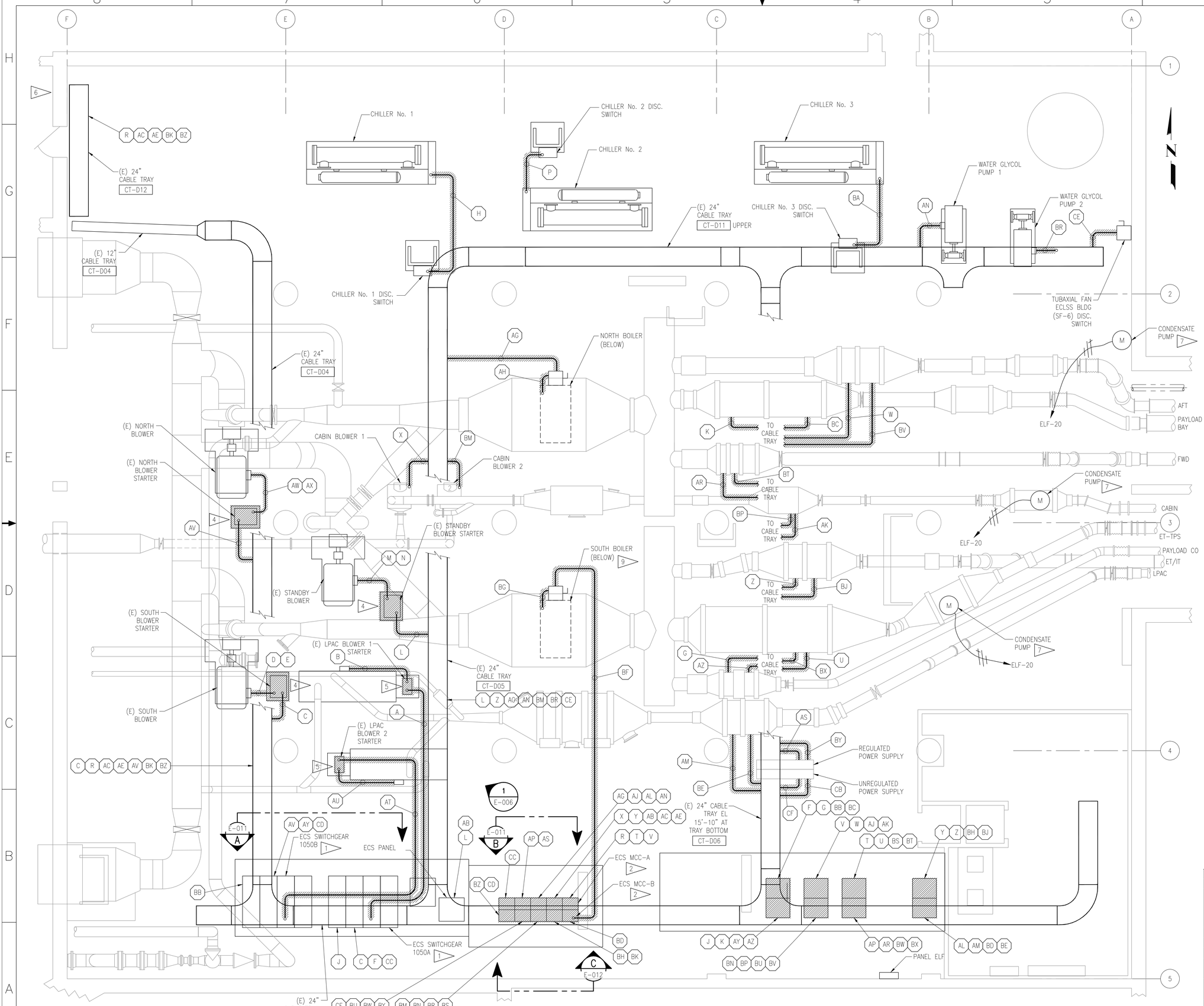

ECS ROOM ELECTRICAL EQUIPMENT DEMO PLAN

SCALE: 1/4"=1'-0"

NOTES:

1. ECS SWITCHGEAR 1050A AND 1050B IS AN EXISTING EATON CUTLER HAMMER MAGNUM DS SWITCHGEAR. UNLESS NOTED OTHERWISE, EXISTING CABLE ROUTING FROM THE SWITCHGEAR CONSISTS OF VERTICAL CONDUIT FROM THE SWITCHGEAR, CABLE TRAY, AND VERTICAL CONDUIT TO THE EQUIPMENT.
2. ECS MCC-A AND MCC-B IS AN EXISTING EATON CUTLER HAMMER FREEDOM 2100 MCC. ALL CABLES FROM THE MCC EXIT FROM THE TOP. UNLESS NOTED OTHERWISE, EXISTING CABLE ROUTING FROM THE MCC CONSISTS OF VERTICAL CONDUIT FROM THE MCC, CABLE TRAY, AND VERTICAL CONDUIT TO THE EQUIPMENT.
3. HATCHING INDICATES DEMOLITION. SEE M-004 FOR CONCRETE DEMOLITION.
4. STARTER IS A FREE STANDING ENCLOSURE MOUNTED ON A CONCRETE HOUSEKEEPING PAD 28"X36" AND 6-1/2" HIGH.
5. STARTER IS A FREE STANDING ENCLOSURE MOUNTED ON A CONCRETE HOUSEKEEPING PAD 28"X28" AND 6-1/2" HIGH.
6. TO COOLING TOWERS, SEE SHEET E-008.
7. REMOVE AND DISPOSE OF CONDENSATE PUMPS AND CONDUCTOR. CONTRACTOR MAY CHOOSE TO REUSE EXISTING CONDUIT FOR INSTALLATION. CONTRACTOR RESPONSIBLE FOR REMOVAL AND DISPOSAL OF ANY UNUSED CONDUIT.

LEGEND:

XX — EQUIPMENT IDENTIFIER

DEMO

PIC 1
THIS SHEET

EO-1-79K39602

SYM	ZONE	DESCRIPTION	DATE	APPROVED
		REVISIONS		

JACOBS
Jacobs Technology Inc.

NATIONAL AERONAUTICS AND SPACE ADMINISTRATION
JOHN F. KENNEDY SPACE CENTER, NASA
KENNEDY SPACE CENTER, FLORIDA

SIGNATURES		DATE
DRAWN	MARTIN HENNIGH	3/07/14
CHECKED	JERRY HUNT	4/01/14
SUBMITTED	BRIAN GARLAND	4/01/14
ST OF LICENSURE: TN LICENSE NO: 00113330		
APPROVED	GLEN WARD	4/01/14
	DUNG TRANG	4/01/14

KSC LAUNCH PAD 39-B
ENVIRONMENTAL CONTROL SYSTEM (ECS) REFURBISHMENT

ECS ROOM ELECTRICAL SYSTEM LAYOUT DEMOLITION

FILE NO. | SIZE F | DWG.NO. 79K39602 | REV

PCN. NO. 98898 | SHEET 60 OF 187

E-006

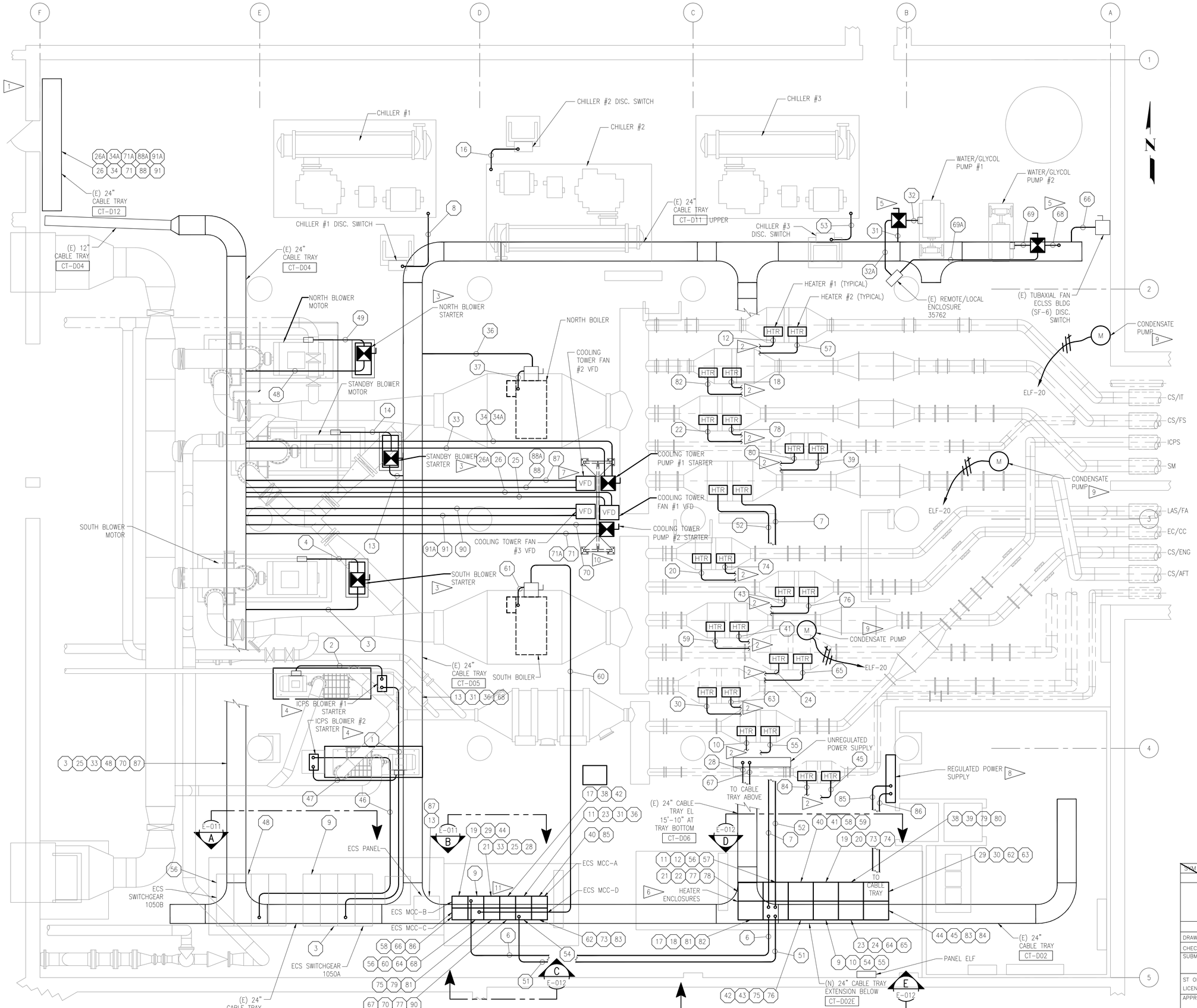

ECS ROOM ELECTRICAL EQUIPMENT PLAN

SCALE: 1/4"=1'-0"

NOTES:

1. TO COOLING TOWERS, SEE SHEET E-009.
2. CABLE SHALL BE ROUTED FROM CABLE TRAY TO HEATERS. CABLE TRAY IS APPROXIMATELY AT THE SAME ELEVATION AS THE AIR DUCTING. PROVIDE AND INSTALL ELECTRICAL CONNECTOR ON DUCTING TO ENSURE AIR TIGHT SEAL.
3. PROVIDE AND INSTALL CONDUCTOR, CONDUIT, AND REDUCED VOLTAGE SOFT STARTER. REUSE EXISTING CABLE TRAY. PROVIDE NEW CONCRETE EQUIPMENT PAD FOR FREE-STANDING SOFT STARTER ENCLOSURE. SEE SPECIFICATION SECTION 26 05 71.00 40 FOR ENCLOSURE EMI REQUIREMENTS. EQUIPMENT PAD SHALL BE ISOLATED FROM BLOWER EQUIPMENT PAD. PROVIDE AND INSTALL BLOWER MANUFACTURER'S PROTECTION PANEL. INSTALL SUPPORTS FOR PROTECTION PANEL. DEPENDING ON MANUFACTURER, NOMINAL SIZE OF PROTECTION PANEL IS 14"W X 16"H X 10"D. CONTRACTOR RESPONSIBLE FOR ALL INTERCONNECT WIRING. SEE E-017 FOR INTERCONNECT WIRING BETWEEN STARTER AND PROTECTION PANEL.
4. PROVIDE AND INSTALL CONDUCTOR AND REDUCED VOLTAGE SOFT STARTER. REUSE EXISTING CONDUITS. EXTEND OR MODIFY RACEWAY AS NECESSARY. PROVIDE NEW CONCRETE EQUIPMENT PAD FOR FREE-STANDING SOFT STARTER ENCLOSURE. SEE SPECIFICATION SECTION 26 05 71.00 40 FOR ENCLOSURE EMI REQUIREMENTS. IF ENCLOSURE IS NOT FREE-STANDING, PROVIDE ADEQUATE SUPPORT STRUCTURE WITH CONCRETE EQUIPMENT PAD. EQUIPMENT PAD SHALL BE ISOLATED FROM BLOWER EQUIPMENT PAD. PROVIDE AND INSTALL BLOWER MANUFACTURER'S PROTECTION PANEL. INSTALL SUPPORTS FOR PROTECTION PANEL. DEPENDING ON MANUFACTURER, NOMINAL SIZE OF PROTECTION PANEL IS 14"W X 16"H X 10"D. CONTRACTOR RESPONSIBLE FOR ALL INTERCONNECT WIRING. SEE E-017 FOR INTERCONNECT WIRING BETWEEN STARTER AND PROTECTION PANEL
5. PROVIDE AND INSTALL REDUCED VOLTAGE SOFT STARTER. USE EXISTING VERTICAL UNISTRUT FOR SUPPORT. PROVIDE AND INSTALL HORIZONTAL UNISTRUT BRACING FOR SUPPORTING STARTER.
6. HEATER ENCLOSURE SHALL BE A FREESTANDING METAL ENCLOSURE. SEE SPECIFICATION SECTION 23 00 00 FOR ENCLOSURE EMI REQUIREMENTS. ENCLOSURE SHALL BE MOUNTED ON EXISTING CONCRETE PAD. ENCLOSURE SHOWN IS FOR DESIGN INTENT ONLY. CONTRACTOR RESPONSIBLE FOR DESIGN, LAYOUT, AND SIZE OF THE ENCLOSURE. SEE SCHEMATIC DIAGRAM FOR WIRING INFORMATION.
7. PROVIDE AND INSTALL REDUCED VOLTAGE SOFT STARTERS, VFDS, SUPPORTING STRUCTURE, AND ALL ASSOCIATED CONDUCTOR AND CONDUIT. SEE SPECIFICATION SECTION 26 05 71.00 40 AND 26 29 23 FOR ENCLOSURE EMI REQUIREMENTS. EXACT LOCATION OF SUPPORT STRUCTURE SHALL BE DETERMINED IN THE FIELD BY THE CONTRACTOR.
8. PROVIDE AND INSTALL ENCLOSURE, CONDUCTORS, AND CONDUIT. CONTRACTOR RESPONSIBLE FOR FIELD ROUTING OF CONDUIT. SEE INSTRUMENTATION DRAWINGS FOR ENCLOSURE DETAILS.
9. REUSE EXISTING CIRCUIT BREAKER. CONTRACTOR MAY REUSE EXISTING CONDUIT. CONTRACTOR RESPONSIBLE FOR ANY MODIFICATIONS TO EXISTING RACEWAY AND ANY NEW RACEWAY.
10. FOR RACK FRAMING DETAILS, SEE SHEET E-014.
11. PROVIDE AND INSTALL NEW MCC-A, MCC-B, MCC-C, AND MCC-D ON EXISTING CONCRETE EQUIPMENT PAD. THE PHYSICAL WIDTH OF THE TWO MOTOR CONTROL CENTERS PLACED SIDE BY SIDE SHALL NOT EXCEED 10'-0".

LEGEND:

XX — EQUIPMENT IDENTIFIER

EO-1-79K39602

SYM	ZONE	DESCRIPTION	DATE	APPROVED
		REVISIONS		

JACOBS
Jacobs Technology Inc.

NATIONAL AERONAUTICS AND SPACE ADMINISTRATION
JOHN F. KENNEDY SPACE CENTER, NASA
KENNEDY SPACE CENTER, FLORIDA

SIGNATURES	DATE
DRAWN MARTIN HENNIGH	3/07/14
CHECKED JERRY HUNT	4/01/14
SUBMITTED BRIAN GARLAND	4/01/14
ST OF LICENSURE: TN LICENSE NO: 00113330	
APPROVED GLEN WARD	4/01/14
DUNG TRANG	4/01/14

KSC LAUNCH PAD 39-B
ENVIRONMENTAL CONTROL SYSTEM (ECS) REFURBISHMENT

ECS ROOM ELECTRICAL SYSTEM LAYOUT INSTALLATION

FILE NO.	SIZE	DWG.NO.	REV
	F	79K39602	

PCN. NO. 98898 SHEET 61 OF 187

E-007

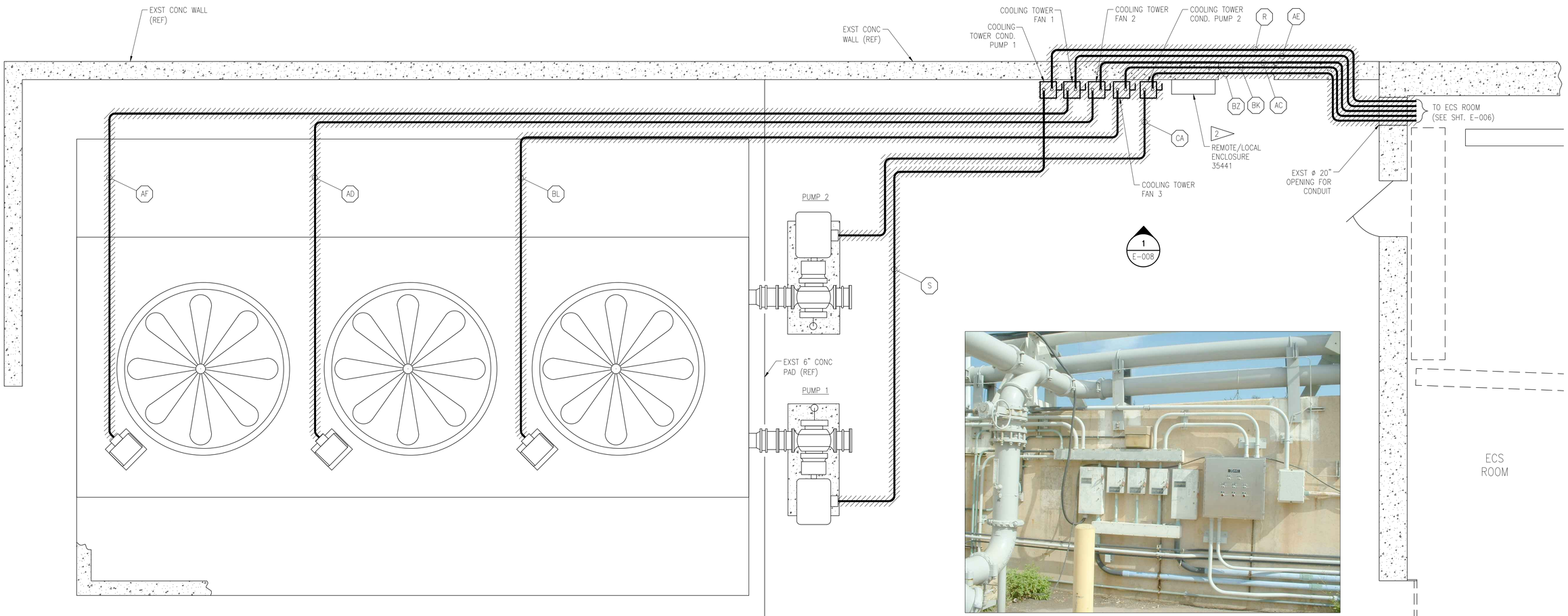

PIC 1
ON THIS SHEET

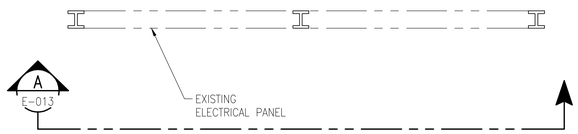

NOTES:

1. ALL POWER CONDUCTORS ARE CONTAINED IN TWO CONDUITS FROM THE WALL PENETRATIONS TO THE DISCONNECT SWITCHES. REMOVE AND DISPOSE OF ALL CONDUCTORS, CONDUITS, WIREWAYS, SUPPORTS, AND DISCONNECT SWITCHES.

2. REMOTE/LOCAL ENCLOSURE 35441 CONTAINS CONTROL CIRCUITS AND SELECTOR SWITCHES FOR THE EXISTING COOLING TOWER SYSTEM. REMOVE AND DISPOSE OF CONDUCTORS AND CONDUIT FROM THIS ENCLOSURE TO THE DISCONNECT SWITCHES. ENCLOSURE AND SWITCHES SHALL BE REUSED DURING INSTALLATION. SEE SCHEMATIC DIAGRAM FOR WIRING DETAILS.

LEGEND:

XX — EQUIPMENT IDENTIFIER

DEMO

COOLING TOWER AREA ELECTRICAL EQUIPMENT DEMO PLAN

SCALE: 1/2" = 1'-0"

EO-1-79K39602

SYM	ZONE	DESCRIPTION	DATE	APPROVED
		REVISIONS		

JACOBS
Jacobs Technology Inc.

SIGNATURES		DATE
DRAWN	MARTIN HENNIGH	3/07/14
CHECKED	JERRY HUNT	4/01/14
SUBMITTED	BRIAN GARLAND	4/01/14
ST OF LICENSURE: TN LICENSE NO: 00113330		
APPROVED	GLEN WARD	4/01/14
	DUNG TRANG	4/01/14

NATIONAL AERONAUTICS AND SPACE ADMINISTRATION
JOHN F. KENNEDY SPACE CENTER, NASA
KENNEDY SPACE CENTER, FLORIDA

KSC LAUNCH PAD 39-B
ENVIRONMENTAL CONTROL SYSTEM (ECS) REFURBISHMENT

COOLING TOWER
ELECTRICAL SYSTEM LAYOUT
DEMOLITION

FILE NO.	SIZE	DWG.NO.	REV
	F	79K39602	
PCN. NO. 98898		SHEET 62 OF 187	

E-008

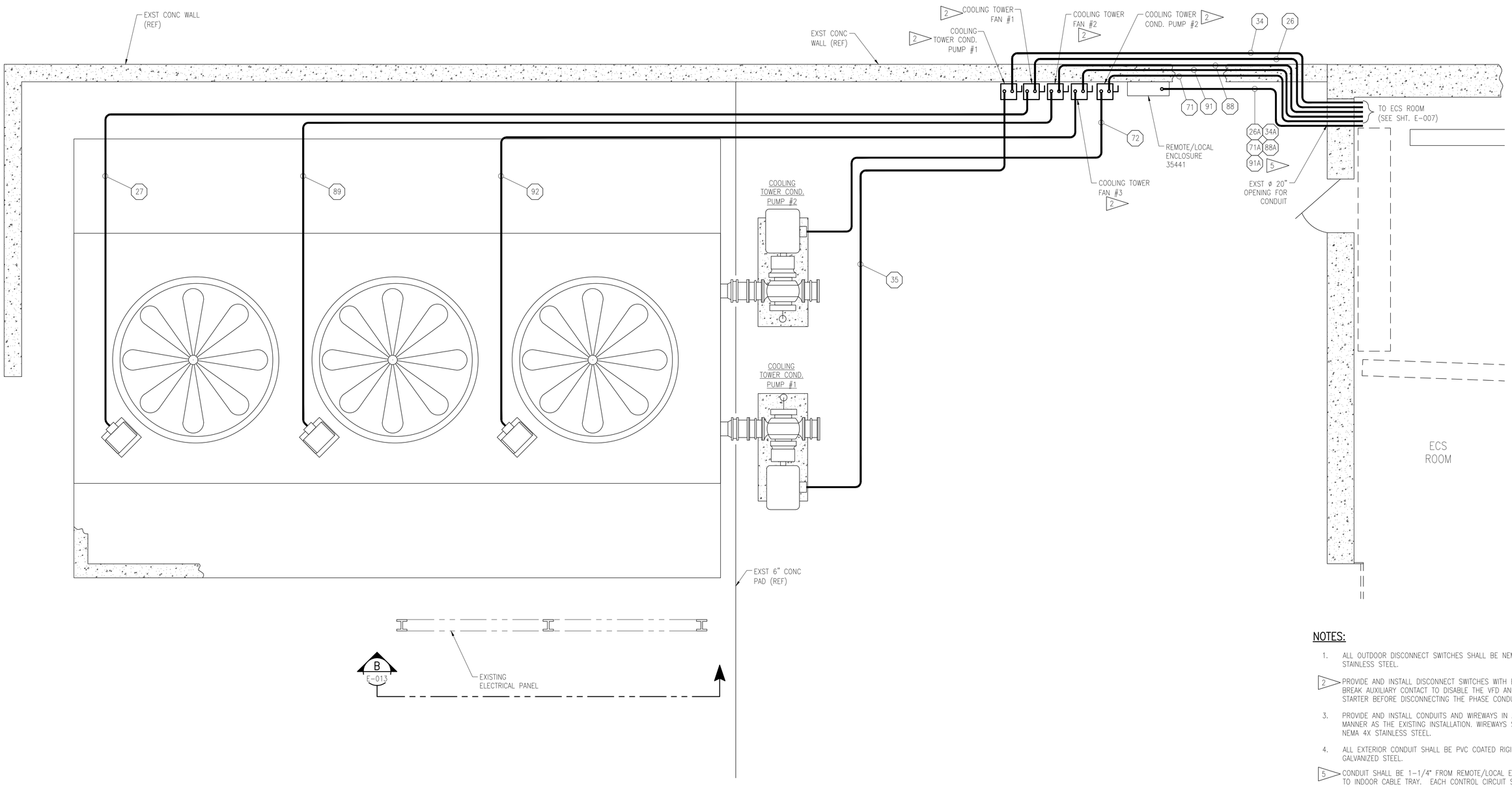

NOTES:

1. ALL OUTDOOR DISCONNECT SWITCHES SHALL BE NEMA 4X STAINLESS STEEL.
2. PROVIDE AND INSTALL DISCONNECT SWITCHES WITH EARLY BREAK AUXILIARY CONTACT TO DISABLE THE VFD AND SOFT STARTER BEFORE DISCONNECTING THE PHASE CONDUCTORS.
3. PROVIDE AND INSTALL CONDUITS AND WIREWAYS IN A SIMILAR MANNER AS THE EXISTING INSTALLATION. WIREWAYS SHALL BE NEMA 4X STAINLESS STEEL.
4. ALL EXTERIOR CONDUIT SHALL BE PVC COATED RIGID GALVANIZED STEEL.
5. CONDUIT SHALL BE 1-1/4" FROM REMOTE/LOCAL ENCLOSURE TO INDOOR CABLE TRAY. EACH CONTROL CIRCUIT SHALL BE ROUTED FROM THE CABLE TRAY TO THE RESPECTIVE DEVICE WITH MAIN CIRCUIT CONDUCTORS FOR TERMINATION.

COOLING TOWER AREA ELECTRICAL EQUIPMENT PLAN

SCALE: 1/2" = 1'-0"

EO-1-79K39602

SYM	ZONE	DESCRIPTION	DATE	APPROVED
		REVISIONS		

JACOBS
Jacobs Technology Inc.

NATIONAL AERONAUTICS AND SPACE ADMINISTRATION
JOHN F. KENNEDY SPACE CENTER, NASA
KENNEDY SPACE CENTER, FLORIDA

SIGNATURES		DATE
DRAWN	MARTIN HENNIGH	3/07/14
CHECKED	JERRY HUNT	4/01/14
SUBMITTED	BRIAN GARLAND	4/01/14
ST OF LICENSURE: TN LICENSE NO: 00113330		
APPROVED	GLEN WARD	4/01/14
	DUNG TRANG	4/01/14

KSC LAUNCH PAD 39-B
ENVIRONMENTAL CONTROL SYSTEM (ECS) REFURBISHMENT

COOLING TOWER
ELECTRICAL SYSTEM LAYOUT
INSTALLATION

FILE NO.	SIZE	DWG.NO.	REV
	F	79K39602	

PCN. NO. 98898 SHEET 63 OF 187

E-009

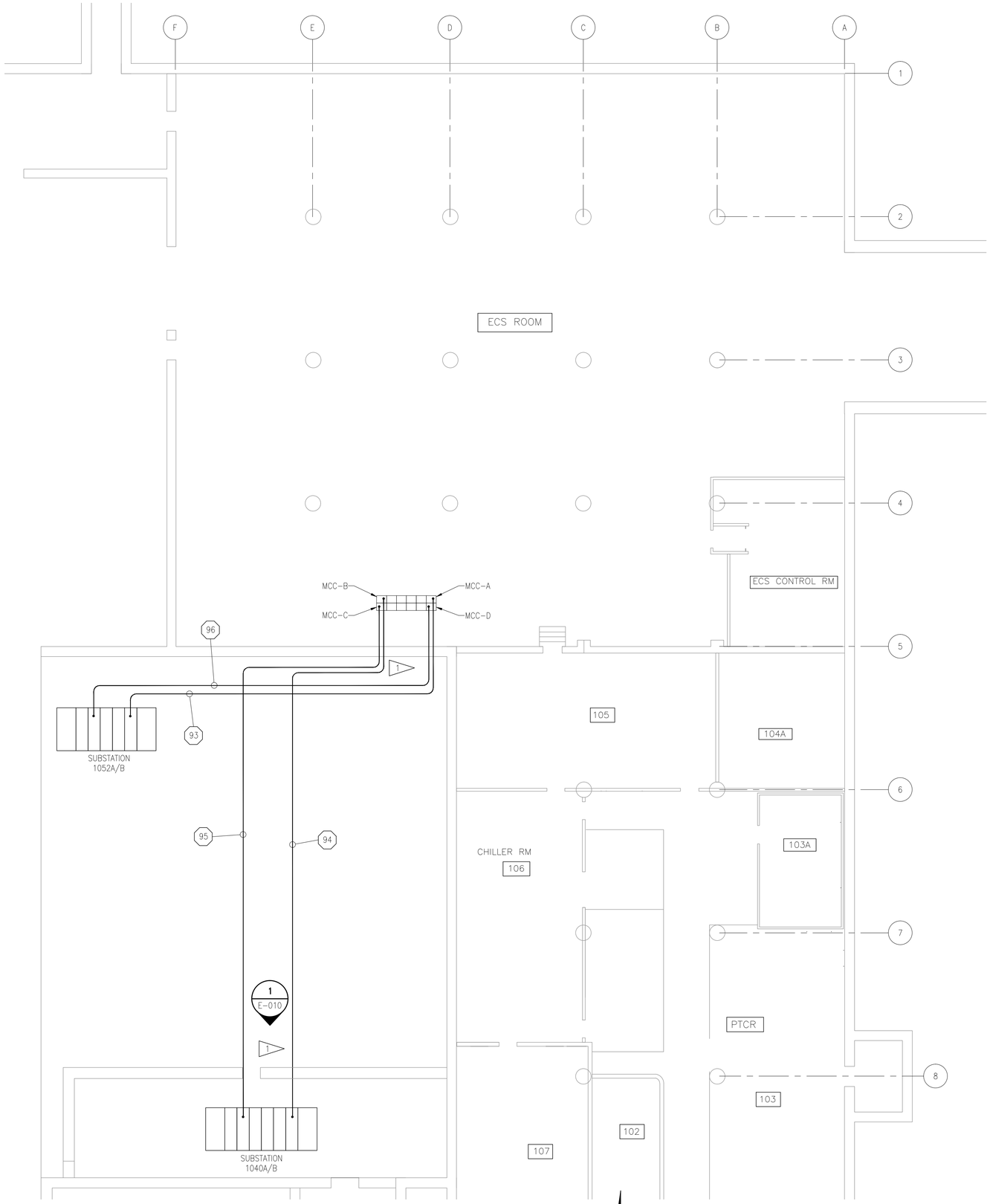

PARTIAL 1ST FLOOR SITE PLAN

SCALE:1/8" =1'-0"

N

NOTES:

1. PROVIDE AND INSTALL PENETRATIONS THROUGH EACH CMU WALL. SEAL EACH PENETRATION TO MAINTAIN SAME ENVIRONMENTAL RATING AS CMU WALL.

2. CONDUIT ROUTING SHOWN DIAGRAMMATICALLY. CONTRACTOR RESPONSIBLE FOR FIELD ROUTING CONDUIT.

PIC 1

THIS SHEET

E0-1-79K39602

NUM	ZONE	DESCRIPTION	DATE	APPROVED
		REVISIONS		

JACOBS

Jacobs Technology Inc.

NATIONAL AERONAUTICS AND SPACE ADMINISTRATION
JOHN F. KENNEDY SPACE CENTER, NASA
KENNEDY SPACE CENTER, FLORIDA

SIGNATURES		DATE
DRAWN	MARTIN HENNIGH	3/07/14
CHECKED	JERRY HUNT	4/01/14
SUBMITTED	BRIAN GARLAND	4/01/14
ST OF LICENSURE: TN LICENSE NO: 00113330		
APPROVED	GLEN WARD	4/01/14
	DUNG TRANG	4/01/14

KSC LAUNCH PAD 39-B
ENVIRONMENTAL CONTROL SYSTEM (ECS) REFURBISHMENT

PTCR APRON
SYSTEM LAYOUT
INSTALLATION

E-010

FILE NO.	SIZE	DWG.NO.	REV
	F		

PCN. NO. 98887 SHEET 64 OF 187

NOTES:

1. ECS SWITCHGEAR 1050A AND 1050B ARE EXISTING EATON CUTLER HAMMER MAGNUM DS SWITCHGEAR. THIS SWITCHGEAR IS EQUIPPED WITH A BREAKER LIFTING DEVICE MOUNTED ON RAILS ON TOP OF THE SWITCHGEAR.
2. ECS MCC–A IS AN EXISTING EATON CUTLER HAMMER FREEDOM 2100 MCC. MCC UNITS MAY BE RETAINED FOR INSTALLATION IN THE NEW MCC IF MANUFACTURER AND MODEL ARE THE SAME AS EXISTING.
3. HATCHING OVER TEXT INDICATES A LABEL CHANGE. REMOVE AND DISPOSE OF EXISTING LABEL. PROVIDE AND INSTALL NEW LABEL TO MATCH BOLD TEXT.

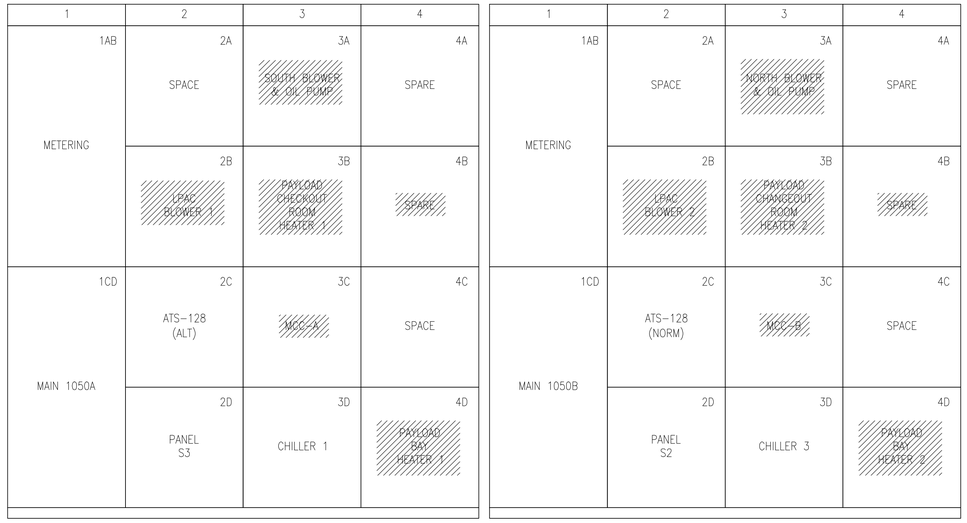

1 DEMOLITION ELEVATION (A / E–006)
SCALE: 1"=1'–0"

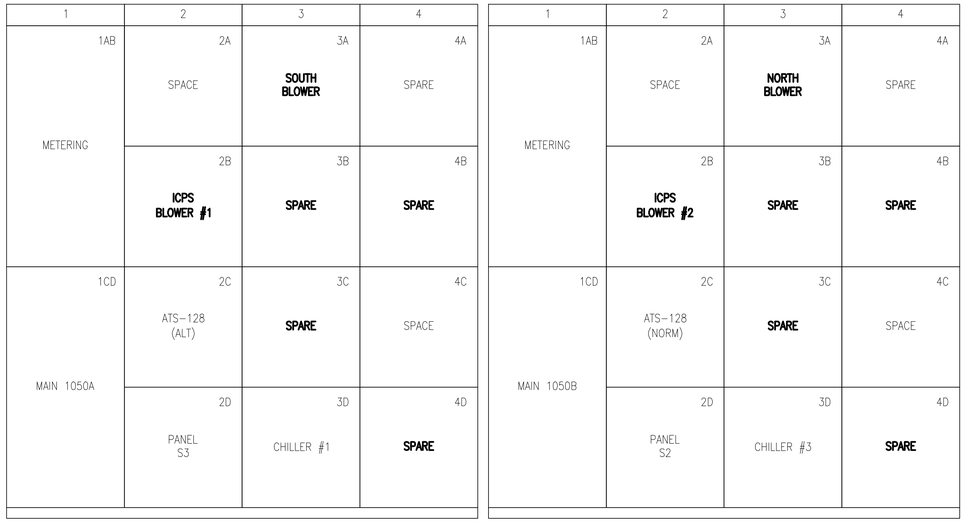

1 INSTALLATION ELEVATION (A / E–007)
SCALE: 1"=1'–0"

LEGEND:

DEMO

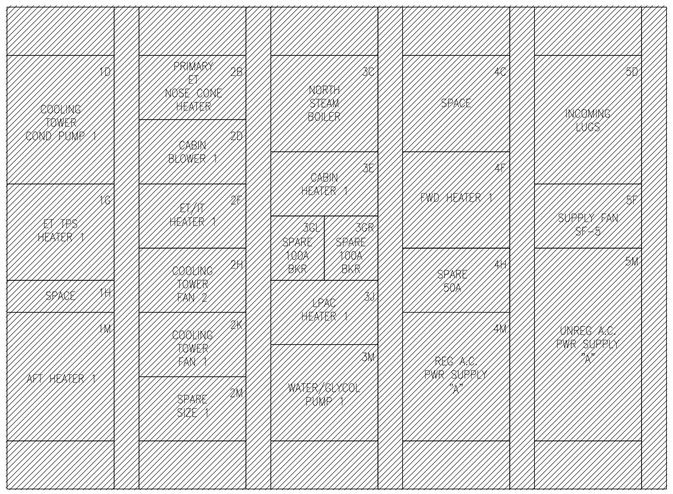

MCC–A

2 DEMOLITION ELEVATION (B / E–006)
SCALE: 1"=1'–0"

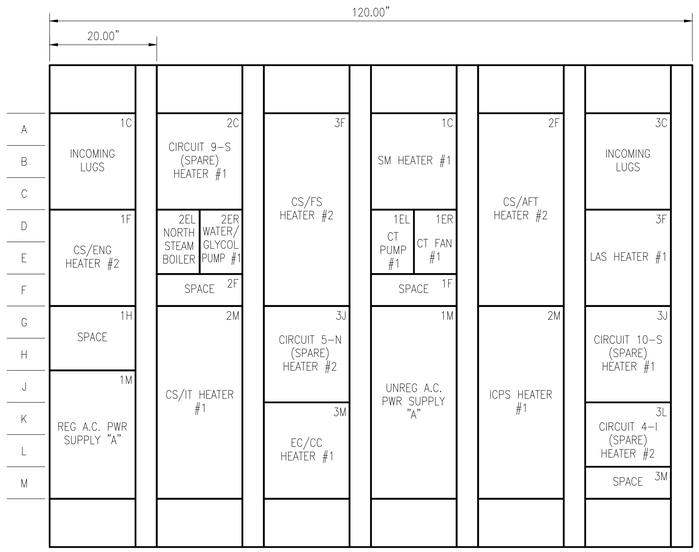

INSTALLATION ELEVATION (B / E–007)
SCALE: 1"=1'–0"

E0–1–79K39602

SYM	ZONE	DESCRIPTION	DATE	APPROVED
		REVISIONS		

JACOBS
Jacobs Technology Inc.

NATIONAL AERONAUTICS AND SPACE ADMINISTRATION
JOHN F. KENNEDY SPACE CENTER, NASA
KENNEDY SPACE CENTER, FLORIDA

SIGNATURES		DATE
DRAWN	MARTIN HENNIGH	3/07/14
CHECKED	JERRY HUNT	4/01/14
SUBMITTED	BRIAN GARLAND	4/01/14
ST OF LICENSURE: TN LICENSE NO: 00113330		
APPROVED	GLEN WARD	4/01/14
	DUNG TRANG	4/01/14

KSC LAUNCH PAD 39-B
ENVIRONMENTAL CONTROL SYSTEM (ECS) REFURBISHMENT
ELECTRICAL DETAILS & ELEVATIONS
ECS SWITCHGEAR AND MCC'S

E-011

FILE NO.	SIZE	DWG.NO.	REV
	F	79K39602	

PCN. NO. 98898 SHEET 65 OF 187

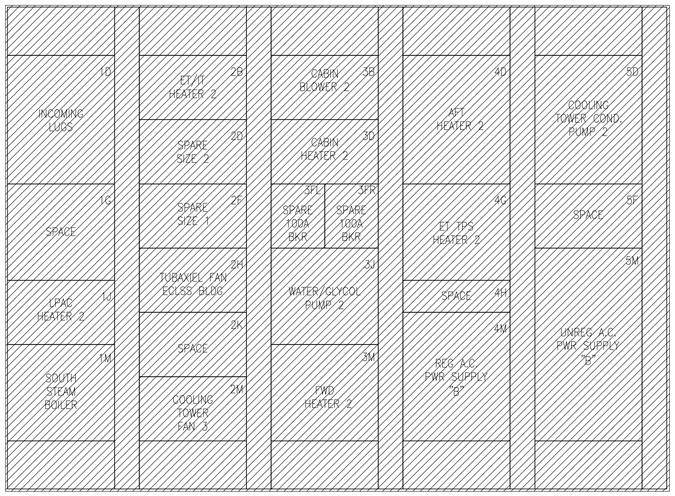

MCC-B

1 DEMOLITION ELEVATION (C / E-006)
SCALE: 1"=1'-0"

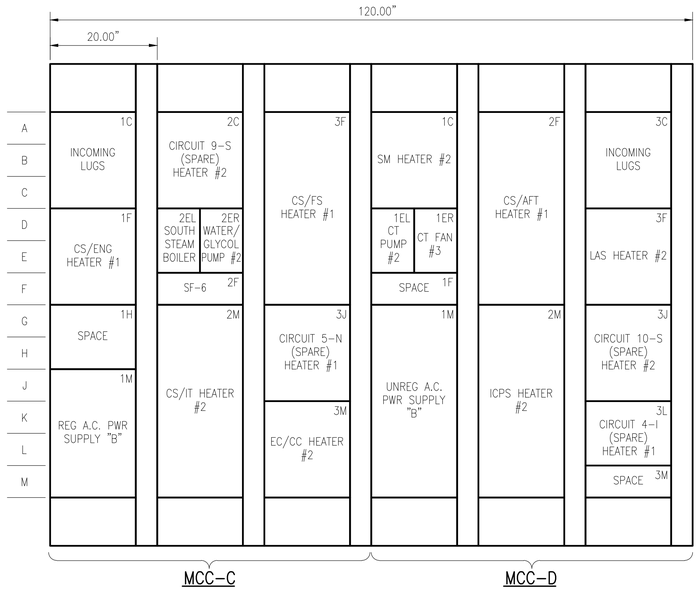

INSTALLATION ELEVATION (C / E-006)
SCALE: 1"=1'-0"

NOTES:

1. ECS MCC-B IS AN EXISTING EATON CUTLER HAMMER FREEDOM 2100 MCC. MCC UNITS MAY BE RETAINED FOR INSTALLATION IN THE NEW MCC IF MANUFACTURER AND MODEL ARE THE SAME AS EXISTING.
2. HEATER CONTROLLER ENCLOSURE DETAILS ARE SHOWN FOR DESIGN INTENT ONLY. CONTRACTOR RESPONSIBLE FOR ENCLOSURE SIZE, POSITION, AND SETTING OF ENCLOSURE.
3. PROVIDE AND INSTALL NEW CABLE TRAY EXTENSION BELOW EXISTING CABLE TRAY. CABLE TRAY SHALL BE 5" HIGH BY 24" WIDE, ALUMINUM LADDER WITH 9" RUNG SPACINGS. PROVIDE NEW SUPPORT SYSTEM FOR THIS SECTION. ROUTE INCOMING CONDUCTORS IN THE NEW EXTENSION, AND ROUTE ALL OUTBOUND CONDUCTORS IN THE EXISTING CABLE TRAY. PROVIDE AND INSTALL 4/0 BARE COPPER CONDUCTOR ROUTED IN NEW CABLE TRAY. BOND NEW GROUND CONDUCTOR TO EXISTING CONDUCTOR.
4. PROVIDE AND INSTALL MULTIPLE ELECTRICAL SOURCES WARNING LABEL FOR EACH HEATER CONTROLLER ENCLOSURE. PROVIDE AND INSTALL A LABEL FOR EACH HEATER CONTROLLER ENCLOSURE INDICATING THE SOURCE OF POWER.

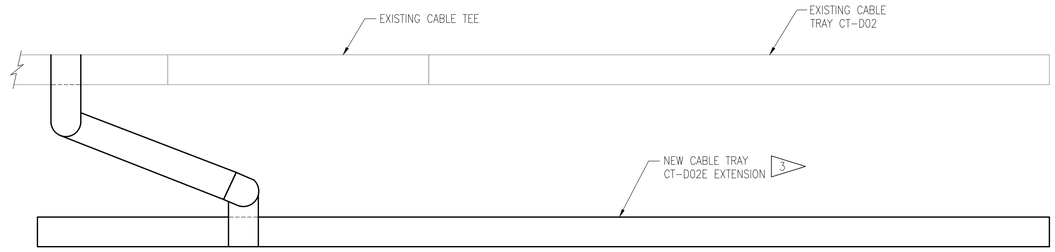

LEGEND:

DEMO

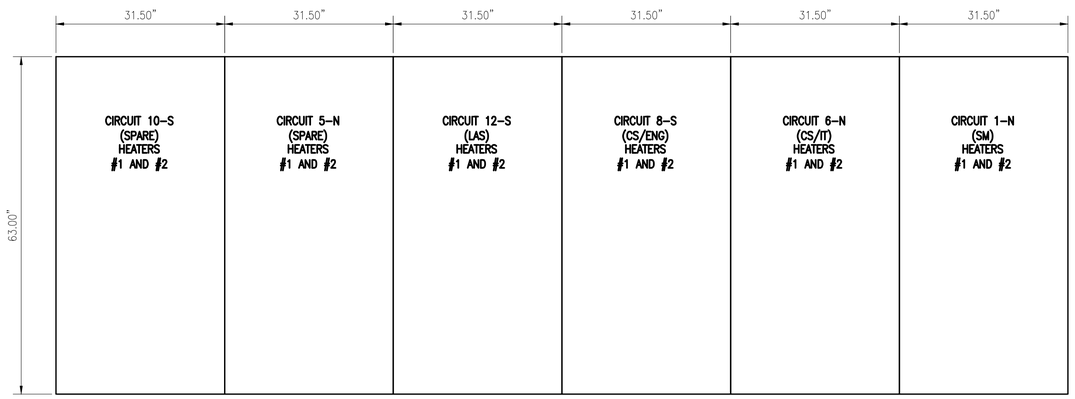

HEATER CONTROL ENCLOSURES

INSTALLATION ELEVATION (D / E-007)
SCALE: 1"=1'-0"

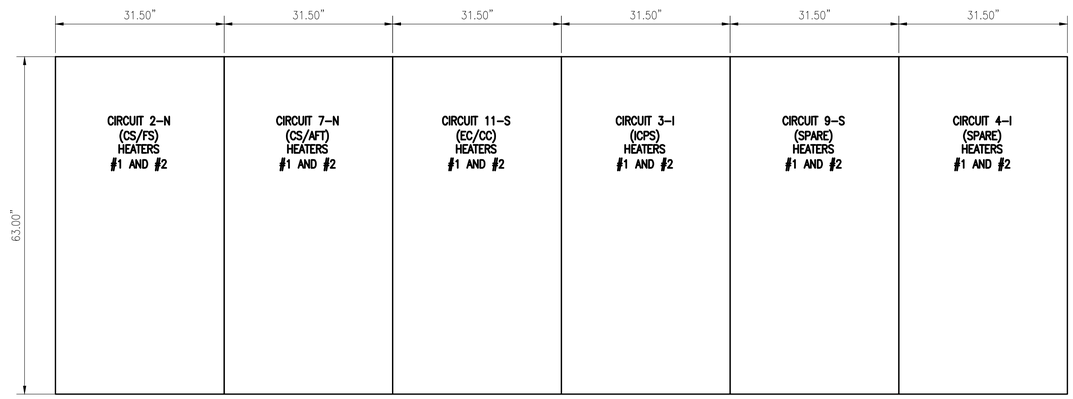

HEATER CONTROL ENCLOSURES

INSTALLATION ELEVATION (E / E-007)
SCALE: 1"=1'-0"

EO-1-79K39602

SYM	ZONE	DESCRIPTION	DATE	APPROVED
		REVISIONS		

JACOBS
Jacobs Technology Inc.

NATIONAL AERONAUTICS AND SPACE ADMINISTRATION
JOHN F. KENNEDY SPACE CENTER, NASA
KENNEDY SPACE CENTER, FLORIDA

SIGNATURES		DATE
DRAWN	MARTIN HENNIGH	3/07/14
CHECKED	JERRY HUNT	4/01/14
SUBMITTED	BRIAN GARLAND	4/01/14
ST OF LICENSURE: TN LICENSE NO: 00113330		
APPROVED	GLEN WARD	4/01/14
	DUNG TRANG	4/01/14

KSC LAUNCH PAD 39-B
ENVIRONMENTAL CONTROL SYSTEM (ECS) REFURBISHMENT
ELECTRICAL DETAILS & ELEVATIONS
HEATER CONTROL ENCLOSURES
AND MCC'S

FILE NO. | SIZE F | DWG.NO. 79K39602 | REV
PCN. NO. 98898 | SHEET 66 OF 187

E-012

NOTES:

1. PANEL PG CIRCUIT BREAKER 10 SUPPLIES POWER TO THE 30 KVA TRANSFORMER AND PANEL PA-CT. REMOVE AND DISPOSE OF CONDUCTORS, WIREWAY, AND TRANSFORMER. PROVIDE AND INSTALL NEW CONDUCTORS, CONDUIT, AND TRANSFORMER. TRANSFORMER SHALL BE NEMA 4X STAINLESS STEEL.

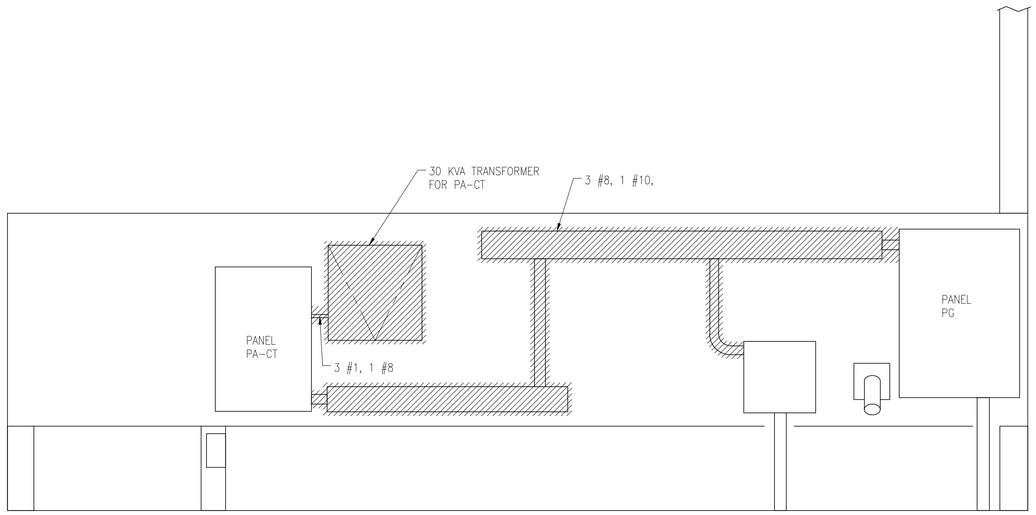

DEMOLITION (A / E-008)
SCALE: 3/4"=1'-0"

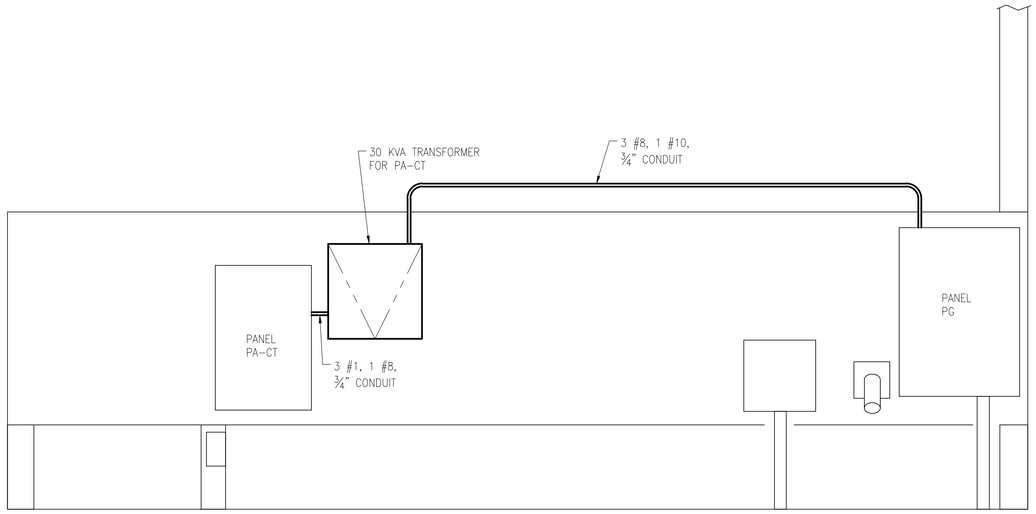

INSTALLATION (B / E-009)
SCALE: 3/4"=1'-0"

E0-1-79K39602

SYM	ZONE	DESCRIPTION	DATE	APPROVED
		REVISIONS		

JACOBS
Jacobs Technology Inc.

NATIONAL AERONAUTICS AND SPACE ADMINISTRATION
JOHN F. KENNEDY SPACE CENTER, NASA
KENNEDY SPACE CENTER, FLORIDA

KSC LAUNCH PAD 39-B
ENVIRONMENTAL CONTROL SYSTEM (ECS) REFURBISHMENT

ELECTRICAL DETAILS
AND ELEVATIONS
DEMOLITION AND INSTALLATION

SIGNATURES		DATE
DRAWN	MARTIN HENNIGH	3/07/14
CHECKED	JERRY HUNT	4/01/14
SUBMITTED	BRIAN GARLAND	4/01/14
ST OF LICENSURE: TN LICENSE NO: 00113330		
APPROVED	GLEN WARD	4/01/14
	DUNG TRANG	4/01/14

FILE NO.	SIZE	DWG.NO.	REV
	F	79K39602	

PCN. NO. 98898 SHEET 67 OF 187

E-013

NOTES:

1. THIS DRAWING SHOWS DESIGN INTENT ONLY. ACTUAL SIZE OF PANEL MAY CHANGE DEPENDING ON SOFT STARTER VFD MANUFACTURER.

2 FOR LOCATION SEE SHEET E-007.

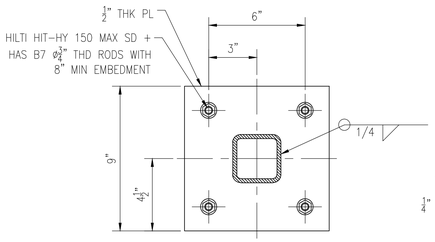

TYP BASE PLATE DETAIL
SCALE: 3"=1'-0"

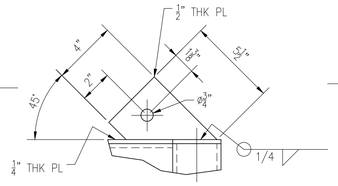

TYP LIFTING LUG DETAIL
SCALE: 3"=1'-0"

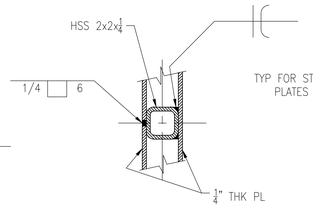

DETAIL 1
SCALE: 3"=1'-0"

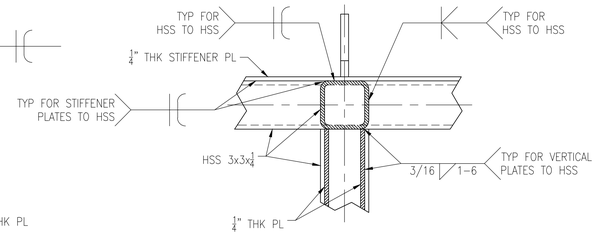

DETAIL 2
SCALE: 3"=1'-0"

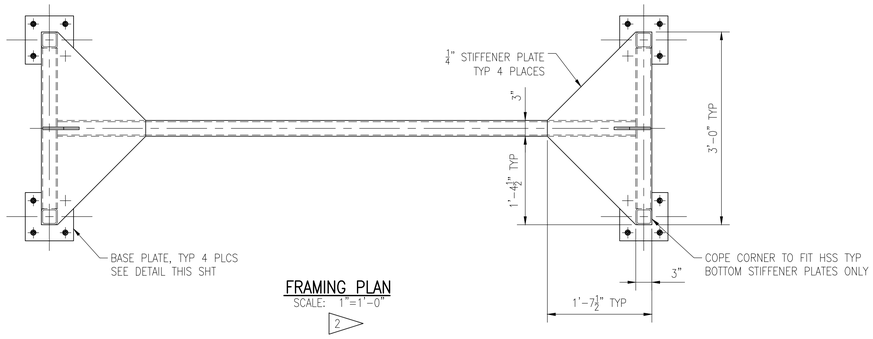

FRAMING PLAN
SCALE: 1"=1'-0"
2

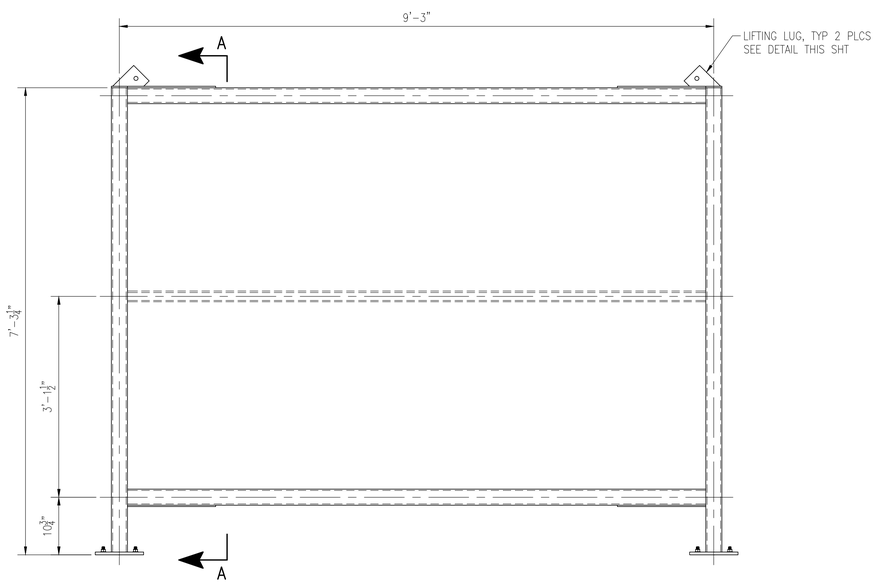

FRAMING ELEVATION
SCALE: 1"=1'-0"

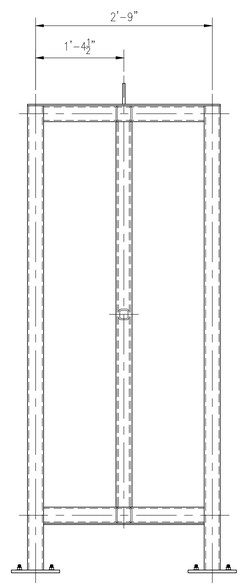

FRAMING END VIEW
SCALE: 1"=1'-0"

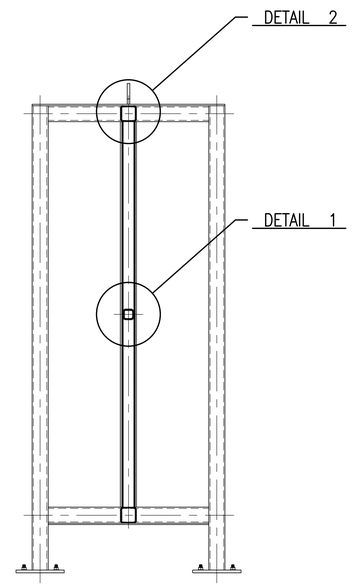

SECTION A-A
SCALE: 1"=1'-0"

EO-1-79K39602

SYM	ZONE	DESCRIPTION	DATE	APPROVED
		REVISIONS		

JACOBS
Jacobs Technology Inc.

NATIONAL AERONAUTICS AND SPACE ADMINISTRATION
JOHN F. KENNEDY SPACE CENTER, NASA
KENNEDY SPACE CENTER, FLORIDA

SIGNATURES		DATE
DRAWN	MARTIN HENNIGH	3/07/14
CHECKED	JERRY HUNT	4/01/14
SUBMITTED	BRIAN GARLAND	4/01/14
ST OF LICENSURE: TN LICENSE NO: 00113330		
APPROVED	GLEN WARD	4/01/14
	DUNG TRANG	4/01/14

KSC LAUNCH PAD 39-B
ENVIRONMENTAL CONTROL SYSTEM (ECS) REFURBISHMENT
ELECTRICAL EQUIPMENT RACK
FRAMING PLAN & ELEVATION

FILE NO.	SIZE	DWG.NO.	REV
	F	79K39602	
PCN. NO. 98898		SHEET 68 OF 187	

E-014

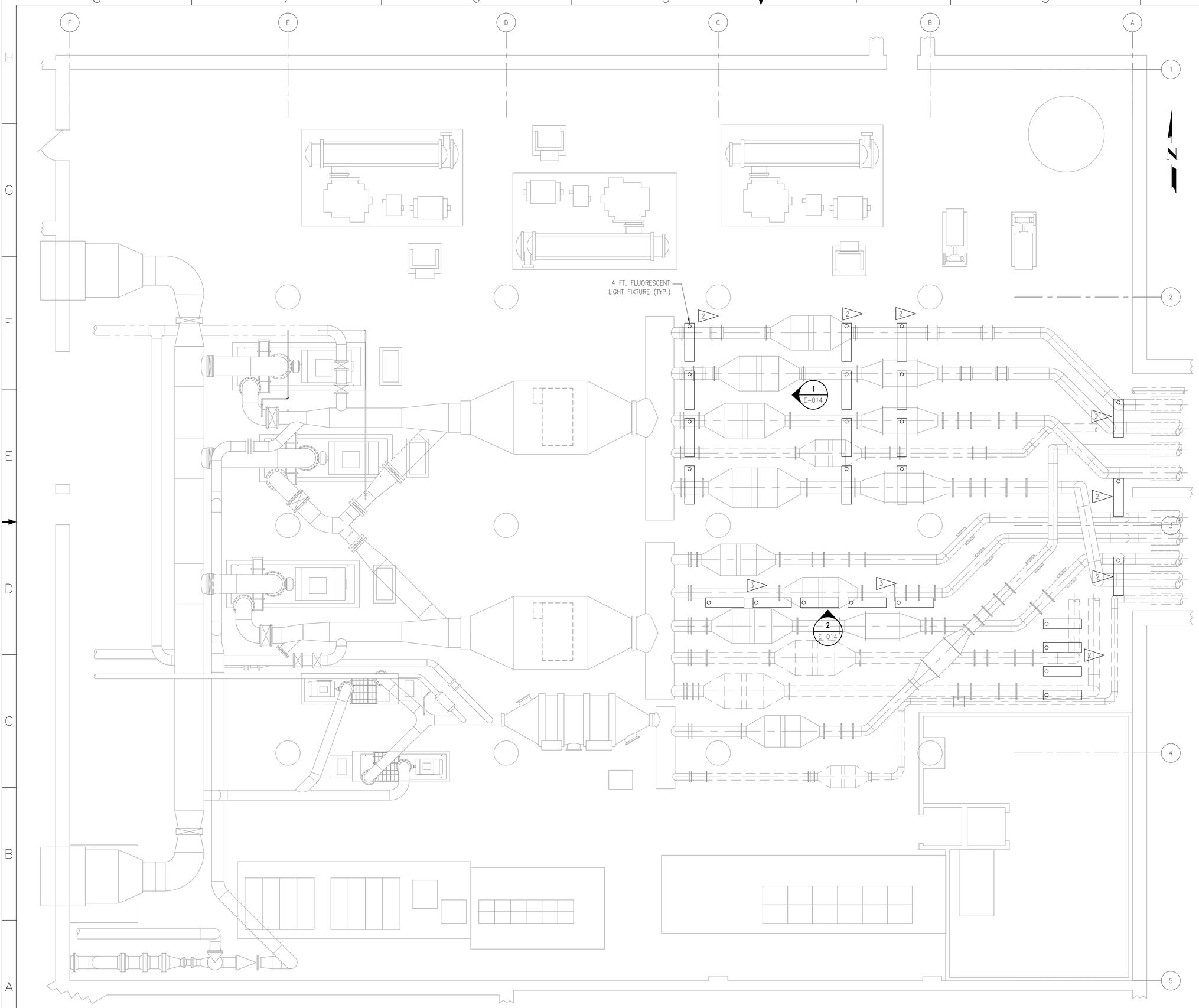

ECS ROOM LIGHTING PLAN
SCALE: 1/4"=1'-0"

NOTES:

1. EXISTING LIGHTING IS SHOWN IN APPROXIMATE LOCATION. CONTRACTOR TO VERIFY FIELD CONDITIONS. RELOCATE FIXTURES BELOW NEW DUCTING. PROVIDE AND INSTALL NEW SUPPORTS TO AVOID INTERFERENCE WITH NEW DUCTING. EXISTING CONDUIT MAY BE REUSED. EXTEND OR MODIFY EXISTING CONDUIT AS NECESSARY. PROVIDE AND INSTALL NEW CONDUCTORS FOR ALL LIGHTING. CONDUIT SHALL BE ¾" AND CONDUCTORS SHALL BE #12 AWG.

2 FIXTURES MOUNTED BELOW DUCTING.

3 FIXTURES MOUNTED ABOVE DUCTING.

PIC 1
E-014

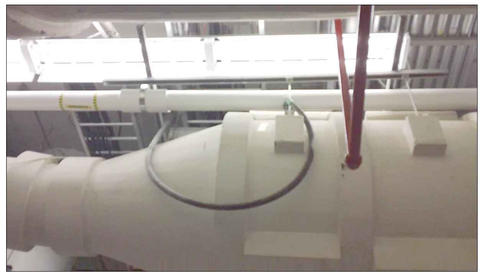

PIC 2
E-014

EO-1-79K39602

SYM	ZONE	DESCRIPTION	DATE	APPROVED
		REVISIONS		

JACOBS
Jacobs Technology Inc.

NATIONAL AERONAUTICS AND SPACE ADMINISTRATION
JOHN F. KENNEDY SPACE CENTER, NASA
KENNEDY SPACE CENTER, FLORIDA

SIGNATURES		DATE
DRAWN	MARTIN HENNIGH	3/07/14
CHECKED	JERRY HUNT	4/01/14
SUBMITTED	BRIAN GARLAND	4/01/14
ST OF LICENSURE: TN LICENSE NO: 00113330		
APPROVED	GLEN WARD	4/01/14
	DUNG TRANG	4/01/14

KSC LAUNCH PAD 39-B
ENVIRONMENTAL CONTROL SYSTEM (ECS) REFURBISHMENT
ECS ROOM LIGHTING
SYSTEM LAYOUT
INSTALLATION

FILE NO.	SIZE	DWG.NO.	REV
	F	79K39602	
PCN. NO. 98898		SHEET 69 OF 187	

E-015

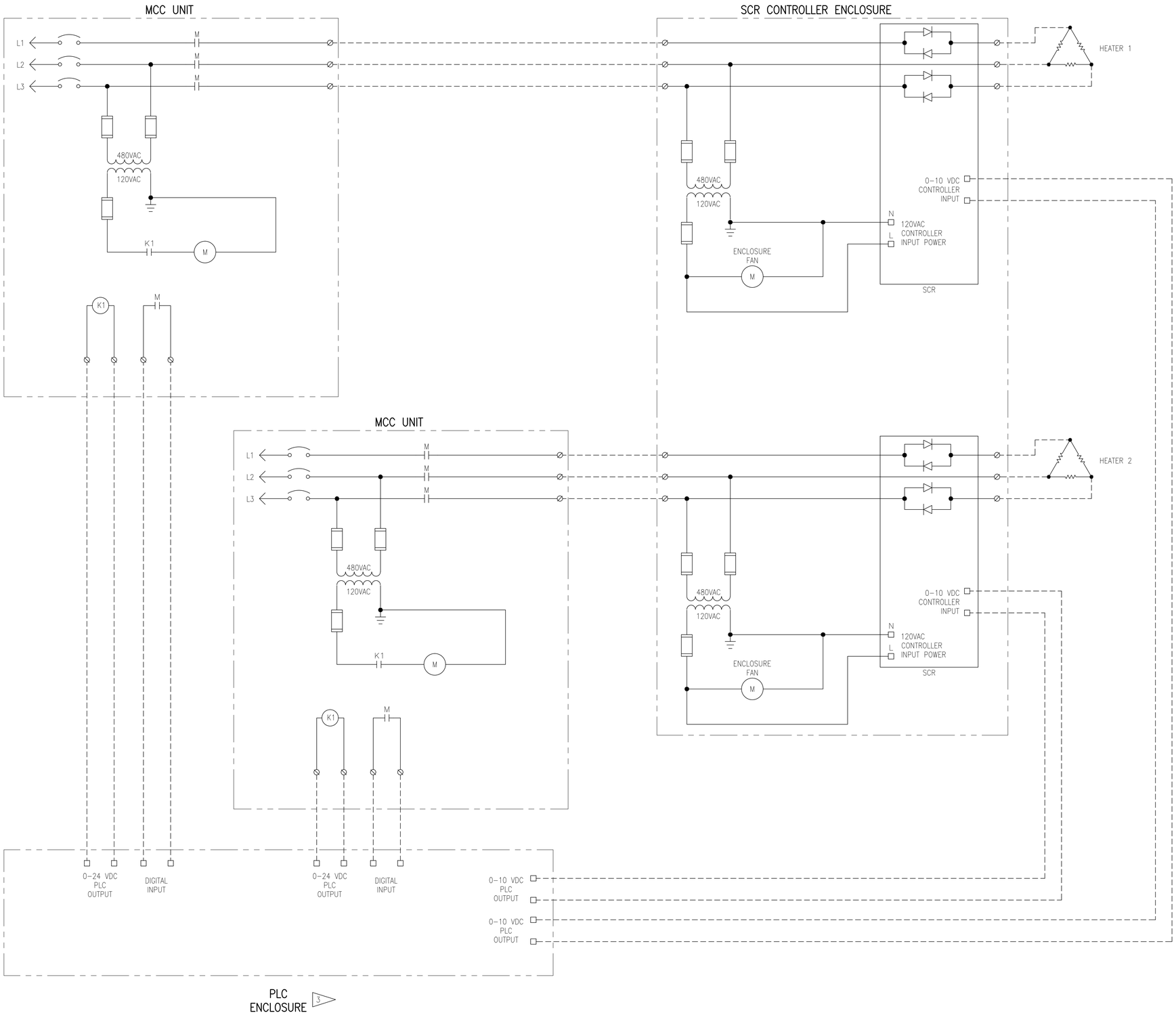

NOTES:

1. DASHED LINES INDICATE FIELD WIRING.
2. THIS SCHEMATIC IS FOR A TYPICAL HEATER SUPPLIED BY THE MCC AND SHOWS DESIGN INTENT ONLY. CONTRACTOR RESPONSIBLE FOR PROVIDING A WORKING SYSTEM. ACTUAL SCHEMATIC MAY VARY DEPENDING ON MANUFACTURER OF COMPONENTS.
3. SEE CONTROLS AND INSTRUMENTATION DRAWINGS FOR DETAILS.
4. PROVIDE AND INSTALL MULTIPLE ELECTRICAL SOURCES WARNING LABEL FOR EACH HEATER CONTROLLER ENCLOSURE. PROVIDE AND INSTALL A LABEL FOR EACH HEATER CONTROLLER ENCLOSURE INDICATING THE SOURCE OF POWER.

2 TYPICAL HEATER SCHEMATIC
SUPPLIED BY MCC

E0–1–79K39602

SYM	ZONE	DESCRIPTION	DATE	APPROVED
		REVISIONS		

JACOBS
Jacobs Technology Inc.

NATIONAL AERONAUTICS AND SPACE ADMINISTRATION
JOHN F. KENNEDY SPACE CENTER, NASA
KENNEDY SPACE CENTER, FLORIDA

KSC LAUNCH PAD 39-B
ENVIRONMENTAL CONTROL SYSTEM (ECS) REFURBISHMENT
ELECTRICAL SCHEMATICS
SHEET 1

SIGNATURES		DATE
DRAWN	MARTIN HENNIGH	3/07/14
CHECKED	JERRY HUNT	4/01/14
SUBMITTED	BRIAN GARLAND	4/01/14
ST OF LICENSURE: TN LICENSE NO: 00113330		
APPROVED	GLEN WARD	4/01/14
	DUNG TRANG	4/01/14

FILE NO.	SIZE	DWG.NO.	REV
	F	79K39602	
PCN. NO. 98898		SHEET 70 OF 187	

E-016

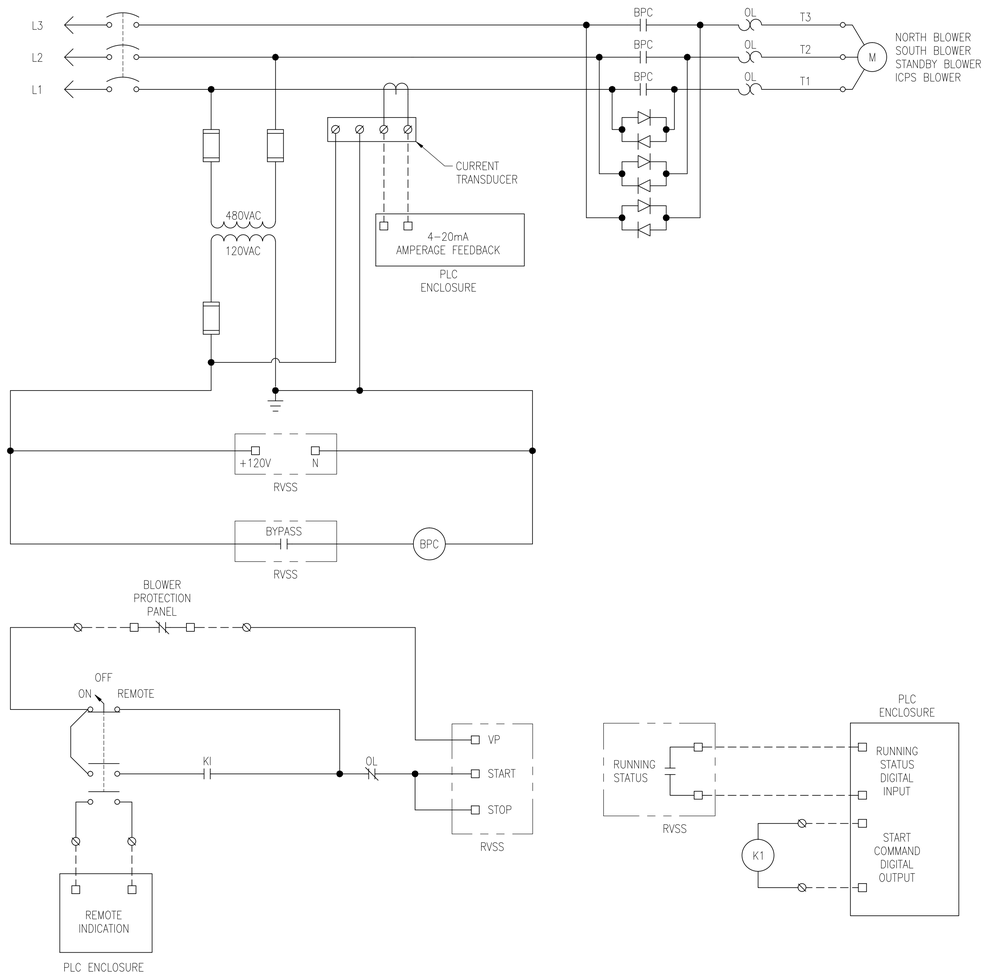

BLOWER STARTER SCHEMATIC (TYPICAL)

NOTES:

1. DASHED LINES INDICATE FIELD WIRING.
2. THESE SCHEMATICS SHOW DESIGN INTENT ONLY. ACTUAL WIRING WILL DEPEND ON STARTER MANUFACTURER SELECTION.

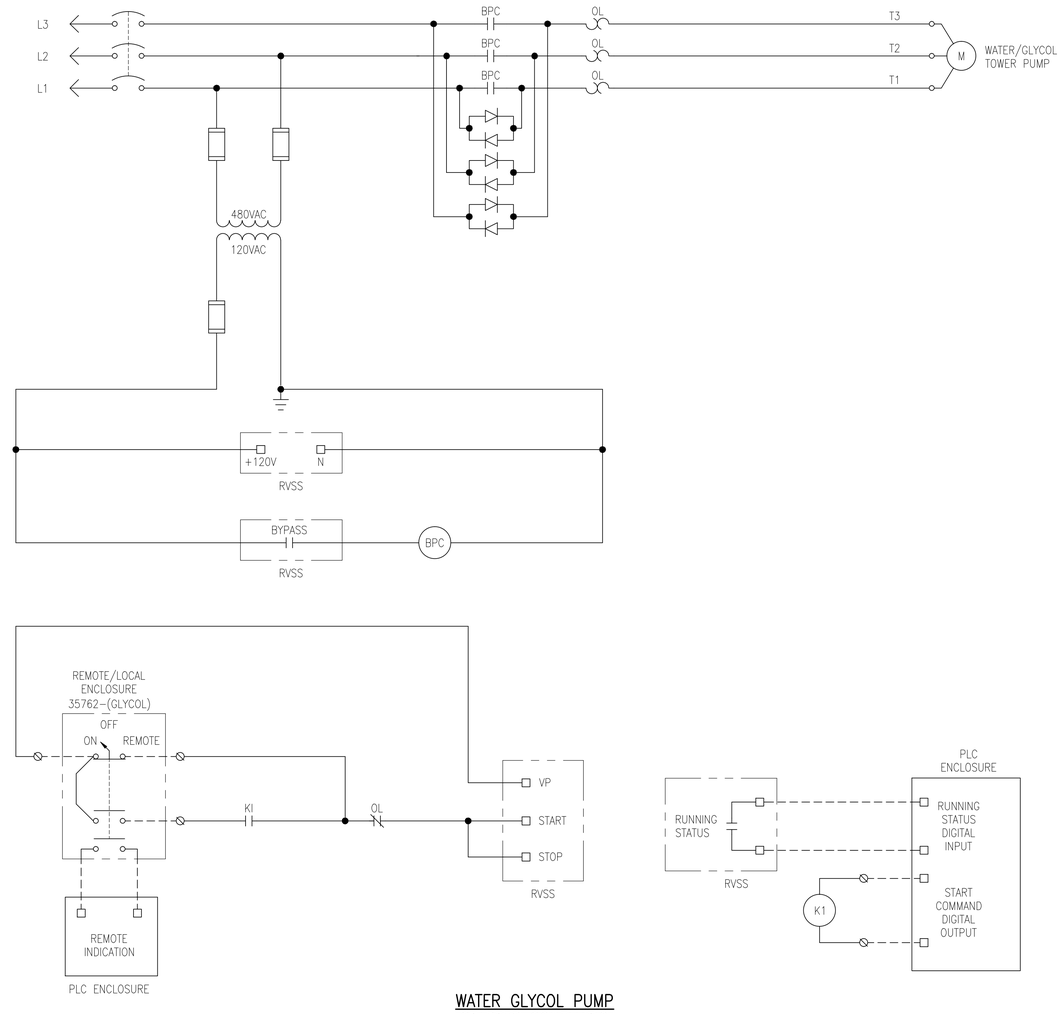

WATER GLYCOL PUMP STARTER SCHEMATIC

EO-1-79K39602

SYM	ZONE	DESCRIPTION	DATE	APPROVED
		REVISIONS		

JACOBS
Jacobs Technology Inc.

SIGNATURES		DATE
DRAWN	MARTIN HENNIGH	3/07/14
CHECKED	JERRY HUNT	4/01/14
SUBMITTED	BRIAN GARLAND	4/01/14
ST OF LICENSURE: TN LICENSE NO: 00113330		
APPROVED	GLEN WARD	4/01/14
	DUNG TRANG	4/01/14

NATIONAL AERONAUTICS AND SPACE ADMINISTRATION
JOHN F. KENNEDY SPACE CENTER, NASA
KENNEDY SPACE CENTER, FLORIDA

KSC LAUNCH PAD 39-B
ENVIRONMENTAL CONTROL SYSTEM (ECS) REFURBISHMENT
ELECTRICAL SCHEMATICS
SHEET 2

FILE NO.	SIZE	DWG.NO.	REV
	F	79K39602	
PCN. NO. 98898		SHEET 71 OF 187	

E-017

NOTES:

1. DASHED LINES INDICATE FIELD WIRING.
2. THESE SCHEMATICS SHOW DESIGN INTENT ONLY. ACTUAL WIRING WILL DEPEND ON STARTER MANUFACTURER SELECTION.

3 THIS AUXILIARY CONTACT SHALL BE PROVIDED AND INSTALLED WITH THE DISCONNECT SWITCH. THIS CONTACT SHALL DISABLE THE DRIVE BEFORE REMOVING POWER FROM THE MOTOR.

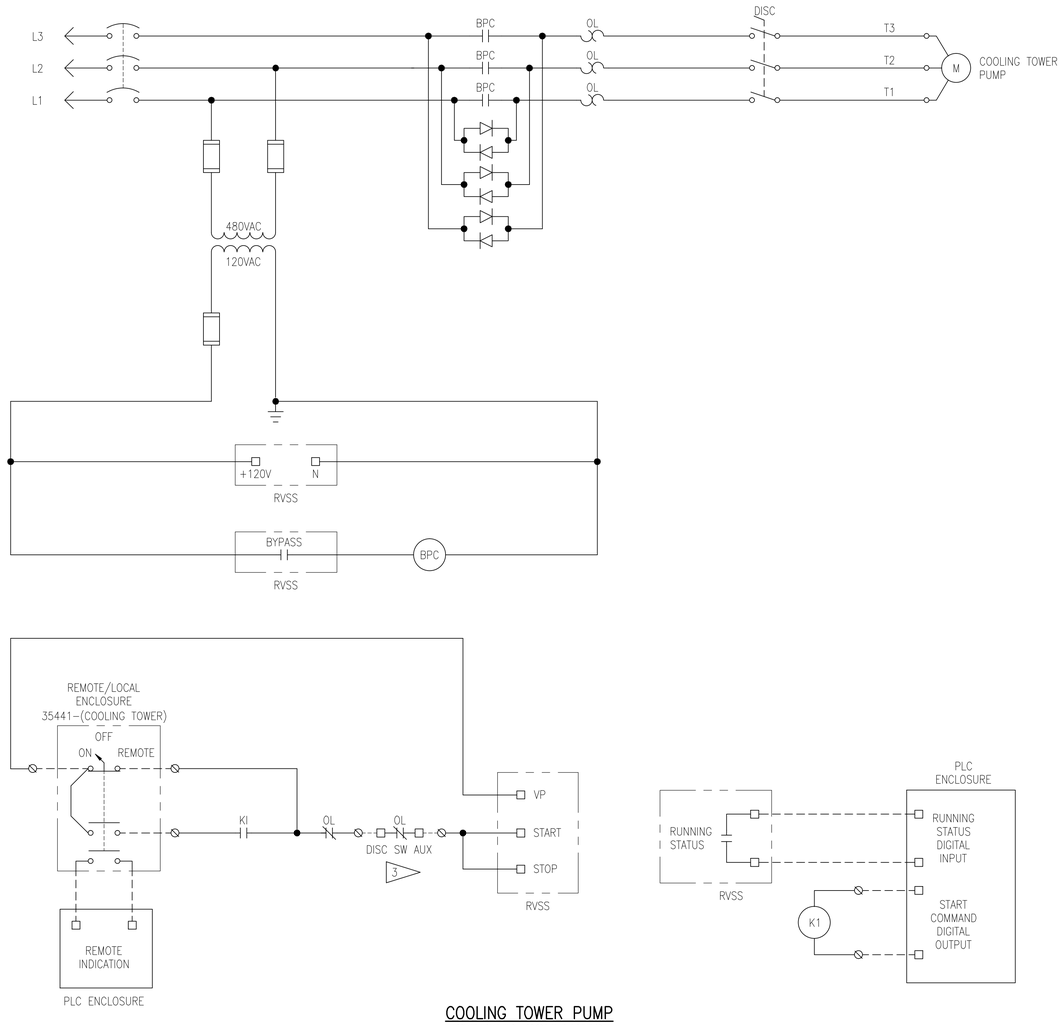

COOLING TOWER PUMP
STARTER SCHEMATIC

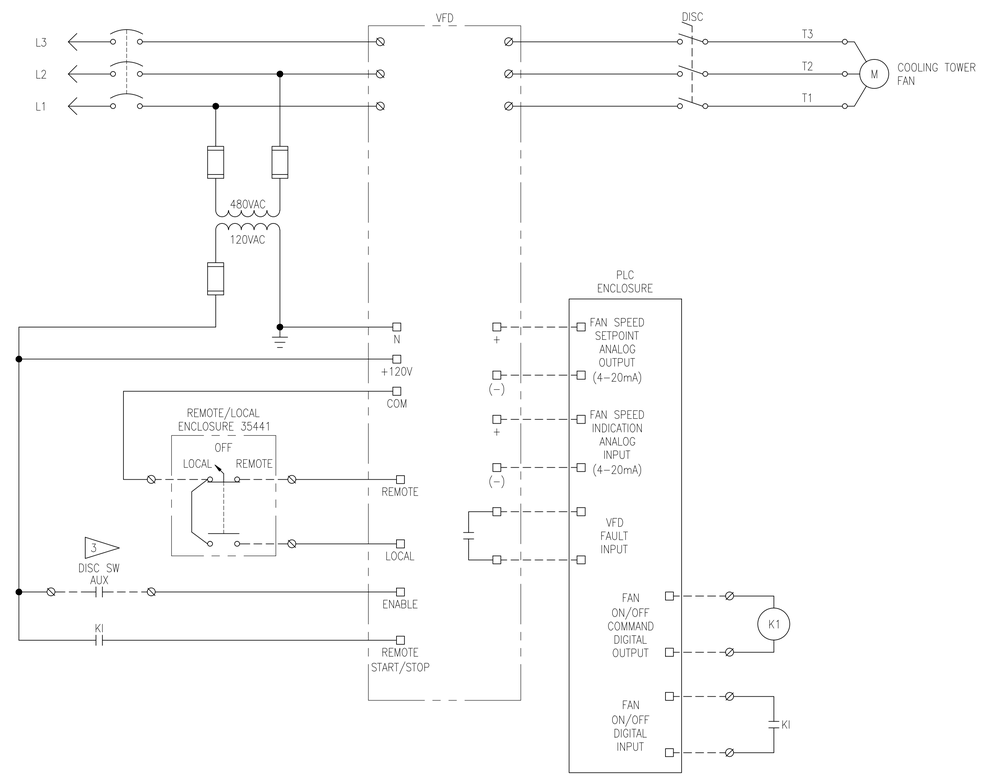

COOLING TOWER FAN
VFD SCHEMATIC

E0-1-79K39602

SYM	ZONE	DESCRIPTION	DATE	APPROVED
		REVISIONS		

JACOBS
Jacobs Technology Inc.

NATIONAL AERONAUTICS AND SPACE ADMINISTRATION
JOHN F. KENNEDY SPACE CENTER, NASA
KENNEDY SPACE CENTER, FLORIDA

KSC LAUNCH PAD 39-B
ENVIRONMENTAL CONTROL SYSTEM (ECS) REFURBISHMENT
ELECTRICAL SCHEMATICS
SHEET 3

SIGNATURES	DATE
DRAWN MARTIN HENNIGH	3/07/14
CHECKED JERRY HUNT	4/01/14
SUBMITTED BRIAN GARLAND	4/01/14
ST OF LICENSURE: TN LICENSE NO: 00113330	
APPROVED GLEN WARD	4/01/14
DUNG TRANG	4/01/14

FILE NO.	SIZE	DWG.NO.	REV
	F	79K39602	
PCN. NO. 98898		SHEET 72 OF 187	

E-018

DEMOLITION CONDUIT AND CABLE SCHEDULE

CABLE NO.	FROM	TO	CONDUCTOR	CONDUIT	CABLE TRAY DESIGNATOR	COMMENTS	DRAWING
A	ECS SWGR 1050A UNIT 2B	LPAC BLOWER 1 STARTER	3 #4/0, 1 #4	2" CONDUIT		CONDUIT TO REMAIN	E-002, E-006
B	LPAC BLOWER 1 STARTER	LPAC BLOWER 1	3 #4/0, 1 #4	2" CONDUIT		CONDUIT TO REMAIN	E-002, E-006
C	ECS SWGR 1050A UNIT 3A	SOUTH BLOWER STARTER	3 #750 KCMIL	4" CONDUIT	CT-D02; CT-D04		E-002, E-006
D	SOUTH BLOWER STARTER	SOUTH BLOWER	3 #750 KCMIL	4" CONDUIT			E-002, E-006
E	SOUTH BLOWER STARTER	SOUTH BLOWER OIL PUMP	4 #12	3/4" CONDUIT			E-002, E-006
F	ECS SWGR 1050A SECTIOIN 3B	PAYLOAD CHANGOUT HTR 1 CONROLLER	(2) 3 #500 KCIML	(2) 4" CONDUIT	CT-D02	2 SETS	E-002, E-006
G	PAYLOAD CHANGOUT HTR 1 CONROLLER	PAYLOAD CHANGOUT HTR 1	(2) 3 #500 KCIML	(2) 4" CONDUIT	CT-D06	2 SETS	E-002, E-006
H	CHILLER #1 DISC	CHILLER #1	3 #750 KCMIL	4" CONDUIT		CONDUIT TO REMAIN	E-002, E-006
J	ECS SWGR 1050A UNIT 4D	PAYLOAD BAY HTR 1 CONTROLLER	3 #4/0	4" CONDUIT	CT-D02		E-002, E-006
K	PAYLOAD BAY HTR 1 CONTROLLER	PAYLOAD BAY HTR 1	3 #4/0	4" CONDUIT	CT-D06		E-002, E-006
L	PANEL ECS BREAKER 27	STANDBY BLOWER STARTER	3 #750 KCMIL	4" CONDUIT	CT-D05		E-002, E-006
M	STANDBY BLOWER STARTER	STANDBY BLOWER	3 #750 KCMIL	4" CONDUIT			E-002, E-006
N	STANDBY BLOWER STARTER	STANDBY BLOWER OIL PUMP	4 #12	3/4" CONDUIT			E-002, E-006
P	CHILLER #2 DISC	CHILLER #2	3 #750 KCMIL	4" CONDUIT		CONDUIT TO REMAIN	E-002, E-006
R	ECS MCC-A UNIT 1D	COOLING TOWER PUMP 1 DISC	3 #4/0, 1 #6	2" CONDUIT	CT-D02; CT-D04; CT-D12		E-002, E-006, E-008
S	COOLING TOWER PUMP 1 DISC	COOLING TOWER PUMP 1	3 #4/0, 1 #6	2" CONDUIT			E-002, E-006, E-008
T	ECS MCC-A UNIT 1G	ET TPS HTR 1 CONTROLLER	3 #6	1" CONDUIT	CT-D02		E-002, E-006
U	ET TPS HTR 1 CONTROLLER	ET TPS HTR 1	3 #6	1" CONDUIT	CT-D06		E-002, E-006
V	ECS MCC-A UNIT 1M	AFT HTR 1 CONTROLLER	3 #2	1-1/2" CONDUIT	CT-D02		E-002, E-006
W	AFT HTR 1 CONTROLLER	AFT HTR 1	3 #2	1-1/2" CONDUIT	CT-D06		E-002, E-006
X	ECS MCC-A UNIT 2D	CABIN BLOWER 1	3 #8	1" CONDUIT	CT-D02; CT-D05		E-002, E-006
Y	ECS MCC-A UNIT 2F	ET/IT HTR 1 CONTROLLER	3 #8	1" CONDUIT	CT-D02		E-002, E-006
Z	ET/IT HTR 1 CONTROLLER	ET/IT HTR 1	3 #8	1" CONDUIT	CT-D06		E-002, E-006
AA	NOT USED						
AB	PANEL ECS BREAKER 03	ECS MCC-A UNIT 2H	3 #6, 1 #10	2" CONDUIT			E-002, E-006, E-008
AC	ECS MCC-A UNIT 2H	COOLING TOWER FAN 2 DISC	3 #6, 1 #10	2" CONDUIT	CT-D02; CT-D04; CT-D12		E-002, E-006, E-008
AC	ECS MCC-A UNIT 2H	COOLING TOWER FAN 2 DISC	3 #6, 1 #10	2" CONDUIT	CT-D02; CT-D04; CT-D12		E-002, E-006, E-008
AD	COOLING TOWER FAN 2 DISC	COOLING TOWER FAN 2	3 #6, 1 #10	3/4" CONDUIT			E-002, E-006, E-008
AE	ECS MCC-A UNIT 2K	COOLING TOWER FAN 1 DISC	3 #6, 1 #10	2" CONDUIT	CT-D02; CT-D04; CT-D12		E-002, E-006, E-008
AF	COOLING TOWER FAN 1 DISC	COOLING TOWER FAN 1	3 #6, 1 #10	3/4" CONDUIT			E-002, E-006, E-008
AG	ECS MCC-A UNIT 3C	NORTH STEAM BOILER DISC	3 #4/0, 1 #4	2" CONDUIT	CT-D02; CT-D05	CONDUIT FROM CABLE TRAY TO DISC TO REMAIN	E-002, E-006
AH	NORTH STEAM BOILER DISC	NORTH STEAM BOILER	3 #4/0, 1 #4	2" CONDUIT			E-002, E-006
AJ	ECS MCC-A UNIT 3E	CABIN HTR 1 CONTROLLER	3 #8, 1 #10	1" CONDUIT	CT-D02		E-002, E-006
AK	CABIN HTR 1 CONTROLLER	CABIN HTR 1	3 #8, 1 #10	1" CONDUIT	CT-D06		E-002, E-006
AL	ECS MCC-A UNIT 3J	LPAC HTR 1 CONTROLLER	3 #8, 1 #10	1" CONDUIT	CT-D02		E-002, E-006
AM	LPAC HTR 1 CONTROLLER	LPAC HTR 1	3 #8, 1 #10	1" CONDUIT	CT-D06		E-002, E-006
AN	ECS MCC-A UNIT 3M	WATER/GLYCOL PUMP 1	3 #2	1-1/2" CONDUIT	CT-D02; CT-D05; CT-D11		E-002, E-006
AP	ECS MCC-A UNIT 4F	FWD HTR 1 CONTROLLER	3 #6	1" CONDUIT	CT-D02		E-002, E-006
AR	FWD HTR 1 CONTROLLER	FWD HTR 1	3 #6	1" CONDUIT	CT-D06		E-002, E-006
AS	ECS MCC-A UNIT 4M	REGULATED POWER SUPPLY A	4 #12	1" CONDUIT	CT-D02; CT-D06		E-002, E-006
AT	ECS SWGR 1050B UNIT 2B	LPAC BLOWER 2 STARTER	3 #4/0, 1 #4	2" CONDUIT		CONDUIT TO REMAIN	E-003, E-006
AU	LPAC BLOWER 2 STARTER	LPAC BLOWER 2	3 #4/0, 1 #4	2" CONDUIT		CONDUIT TO REMAIN	E-003, E-006
AV	ECS SWGR 1050B UNIT 3A	NORTH BLOWER STARTER	3 #750 KCMIL	4" CONDUIT	CT-D02; CT-D04		E-003, E-006
AW	NORTH BLOWER STARTER	NORTH BLOWER	3 #750 KCMIL	4" CONDUIT			E-003, E-006
AX	NORTH BLOWER STARTER	NORTH BLOWER OIL PUMP	4 #12	3/4" CONDUIT			E-003, E-006
AY	ECS SWGR 1050B UNIT 3B	PAYLOAD CHANGOUT HTR 2 CONROLLER	3 #500 KCIML	4" CONDUIT	CT-D02		E-003, E-006
AZ	PAYLOAD CHANGOUT HTR 2 CONROLLER	PAYLOAD CHANGOUT 2 HTR	3 #500 KCIML	4" CONDUIT	CT-D06		E-003, E-006
BA	CHILLER #3 DISC	CHILLER #3	3 #750 KCMIL	4" CONDUIT		CONDUIT TO REMAIN	E-003, E-006
BB	ECS SWGR 1050B 4D	PAYLOAD BAY HTR 2 CONTROLLER	3 #4/0	4" CONDUIT	CT-D02		E-003, E-006
BC	PAYLOAD BAY HTR 2 CONTROLLER	PAYLOAD BAY HTR 2	3 #4/0	4" CONDUIT	CT-D06		E-003, E-006
BD	ECS MCC-B UNIT 1J	LPAC HTR 2 CONTROLLER	3 #6, 1 #10	3/4" CONDUIT	CT-D02		E-003, E-006
BE	LPAC HTR 2 CONTROLLER	LPAC HTR 2	3 #6, 1 #10	3/4" CONDUIT	CT-D06		E-003, E-006
BF	ECS MCC-B UNIT 1M	SOUTH STEAM BOILER DISC	3 #2	2" CONDUIT			E-003, E-006
BG	SOUTH STEAM BOILER DISC	SOUTH STEAM BOILER	3 #2	2" CONDUIT			E-003, E-006
BH	ECS MCC-B UNIT 2B	ET/IT HTR 2 CONTROLLER	3 #6	1" CONDUIT	CT-D02		E-003, E-006
BJ	ET/IT HTR 2 CONTROLLER	ET/IT HTR 2	3 #6	1" CONDUIT	CT-D06		E-003, E-006
BK	ECS MCC-B UNIT 2M	COOLING TOWER FAN 3 DISC	3 #6	2" CONDUIT	CT-D02; CT-D04; CT-D12		E-003, E-006, E-008
BL	COOLING TOWER FAN 3 DISC	COOLING TOWER FAN 3	3 #6	1" CONDUIT			E-003, E-006, E-008
BM	ECS MCC-B UNIT 3B	CABIN BLOWER 2	3 #8	1" CONDUIT	CT-D02; CT-D05		E-003, E-006
BN	ECS MCC-B UNIT 3D	CABIN HEATER 2 CONTROLLER	3 #8	1" CONDUIT	CT-D02		E-003, E-006
BP	CABIN HEATER 2 CONTROLLER	CABIN HEATER 2	3 #8	1" CONDUIT	CT-D06		E-003, E-006
BR	ECS MCC-B UNIT 3J	WATER/GLYCOL PUMP 2	3 #2	CABLE TRAY	CT-D02; CT-D05; CT-D11		E-003, E-006
BS	ECS MCC-B UNIT 3M	FWD HTR 2 CONTROLLER	3 #8	3/4" CONDUIT	CT-D02		E-003, E-006
BT	FWD HTR 2 CONTROLLER	FWD HTR 2	3 #8	3/4" CONDUIT	CT-D06		E-003, E-006
BU	ECS MCC-B UNIT 4M	AFT HTR 2 CONTROLLER	3 #2	CABLE TRAY	CT-D02		E-003, E-006
BV	AFT HTR 2 CONTROLLER	AFT HTR 2	3 #2	CABLE TRAY	CT-D06		E-003, E-006
BW	ECS MCC-B UNIT 4G	ET TPS HTR 2 CONTROLLER	3 #8	CABLE TRAY	CT-D02		E-003, E-006
BX	ET TPS HTR 2 CONTROLLER	ET TPS HTR 2	3 #8	CABLE TRAY	CT-D06		E-003, E-006
BY	ECS MCC-B UNIT 4M	REGULATED POWER SUPPLY B	4 #12	1" CONDUIT			E-003, E-006
BZ	ECS MCC-B UNIT E1	COOLING TOWER PUMP 2 DISC	3 #4/0, 1 #6	2" CONDUIT	CT-D02; CT-D04; CT-D12		E-003, E-006, E-008
CA	COOLING TOWER PUMP 2 DISC	COOLING TOWER PUMP 2	3 #4/0, 1 #6	2" CONDUIT			E-003, E-006, E-008
CB	ECS MCC-A UNIT 5M	UNREGULATED POWER SUPPLY A	4 #12	3/4" CONDUIT	CT-D02; CT-D05; CT-D11		E-002, E-006
CC	ECS SWGR 1050A UNIT 3C	ECS MCC-A UNIT 5D	(2) 600 KCMIL, #1/0	(2) 4" CONDUIT	CT-D02	2 SETS	E-002, E-006
CD	ECS SWGR 1050B UNIT 3C	ECS MCC-B UNIT 1D	(2) 600 KCMIL, #1/0	(2) 4" CONDUIT	CT-D02	2 SETS	E-003, E-006
CF	ECS MCC-B UNIT 5M	UNREGULATED POWER SUPPLY B	4 #12	3/4" CONDUIT	CT-D02; CT-D05; CT-D11		E-003, E-006
CE	ECS MCC-B UNIT 2H	TUBAXIAL FAN ECLSS BLDG DISC	4 #12	3/4" CONDUIT	CT-D02; CT-D05; CT-D11		E-003, E-006

EO-1-79K39602

SYM	ZONE	DESCRIPTION	DATE	APPROVED
		REVISIONS		

JACOBS
Jacobs Technology Inc.

SIGNATURES		DATE
DRAWN	MARTIN HENNIGH	3/07/14
CHECKED	JERRY HUNT	4/01/14
SUBMITTED	BRIAN GARLAND	4/01/14
ST OF LICENSURE: TN LICENSE NO: 00113330		
APPROVED	GLEN WARD	4/01/14
	DUNG TRANG	4/01/14

NATIONAL AERONAUTICS AND SPACE ADMINISTRATION
JOHN F. KENNEDY SPACE CENTER, NASA
KENNEDY SPACE CENTER, FLORIDA

KSC LAUNCH PAD 39-B
ENVIRONMENTAL CONTROL SYSTEM (ECS) REFURBISHMENT
ELECTRICAL SCHEDULES
DEMOLITION

FILE NO. | SIZE F | DWG.NO. 79K39602 | REV
PCN. NO. 98898 | SHEET 73 OF 187

E-019

INSTALLATION CONDUIT AND CABLE SCHEDULE

CABLE NO.	FROM	TO	CONDUCTOR	CONDUIT	CABLE TRAY DESIGNATOR	COMMENTS	SHEET
1	ECS SWGR 1050A UNIT 2B	ICPS BLOWER #1 STARTER	3 #3/0, 1 #3	2" CONDUIT		REUSE EXISTING CONDUIT	E-004, E-007
2	ICPS BLOWER #1 STARTER	ICPS BLOWER #1	3 #3/0, 1 #3	2" CONDUIT		REUSE EXISTING CONDUIT	E-004, E-007
3	ECS SWGR 1050A UNIT 3A	SOUTH BLOWER STARTER	3 #750 KCMIL, 1 #2/0	4" CONDUIT	CT-D02; CT-D04		E-004, E-007
4	SOUTH BLOWER STARTER	SOUTH BLOWER	3 #750 KCMIL, 1 #2/0	4" CONDUIT			E-004, E-007
5	NOT USED						
6	ECS MCC-B UNIT 2F	HTR CONTROLLER CS/AFT ENCL	3 #350 KCMIL, 1 #4	3" CONDUIT			E-004, E-007
7	HTR CONTROLLER CS/AFT ENCL	CS/AFT HTR 2	3 #350 KCMIL, 1 #4	3" CONDUIT			E-004, E-007
8	CHILLER #1 DISCONNECT	CHILLER #1	3 #750 KCMIL	4" CONDUIT		REUSE EXISTING CONDUIT	E-004, E-007
9	ECS MCC-B UNIT 2M	HTR CONTROLLER ICPS ENCL	1-3C #3/0 W/ #6 GND	2-1/2" CONDUIT	CT-D02E		E-004, E-007
10	HTR CONTROLLER ICPS ENCL	ICPS HTR 1	1-3C #3/0 W/ #6 GND	2-1/2" CONDUIT	CT-D02; CT-D06		E-004, E-007
11	ECS MCC-A UNIT 2M	HTR CONTROLLER CS/IT ENCL	1-3C #3/0 W/ #6 GND	2-1/2" CONDUIT	CT-D02E		E-004, E-007
12	HTR CONTROLLER CS/IT ENCL	CS/IT HTR 1	1-3C #3/0 W/ #6 GND	2-1/2" CONDUIT	CT-D02; CT-D06		E-004, E-007
13	PANEL ECS CB 27	STANDBY BLOWER STARTER	3 #750 KCMIL, 1 #2/0	4" CONDUIT	CT-D05		E-004, E-007
14	STANDBY BLOWER STARTER	STANDBY BLOWER	3 #750 KCMIL, 1 #2/0	4" CONDUIT			E-004, E-007
15	NOT USED						
16	CHILLER #2 DISCONNECT	CHILLER #2	3 #750 KCMIL	4" CONDUIT		REUSE EXISTING CONDUIT	E-004, E-007
17	ECS MCC-A UNIT 3F	HTR CONTROLLER CS/FS ENCL	1-3C #2/0 W/ #6 GND	2" CONDUIT	CT-D02E		E-004, E-007
18	HTR CONTROLLER CS/FS ENCL	CS/FS HTR 2	1-3C #2/0 W/ #6 GND	2" CONDUIT	CT-D02; CT-D06		E-004, E-007
19	ECS MCC-B UNIT 3F	HTR CONTROLLER LAS ENCL	1-3C #2 W/ #8 GND	1-1/2" CONDUIT	CT-D02E		E-004, E-007
20	HTR CONTROLLER LAS ENCL	LAS HTR 1	1-3C #2 W/ #8 GND	1-1/2" CONDUIT	CT-D02; CT-D06		E-004, E-007
21	ECS MCC-B UNIT 1C	HTR CONTROLLER SM ENCL	1-3C #2 W/ #6 GND	2" CONDUIT	CT-D02E		E-004, E-007
22	HTR CONTROLLER SM ENCL	SM HTR 1	1-3C #2 W/ #6 GND	2" CONDUIT	CT-D02; CT-D06		E-004, E-007
23	ECS MCC-A UNIT 2C	CIRCUIT 9-S HTR CONTROLLER SPARE ENCL	1-3C #1/0 W/ #6 GND	2" CONDUIT	CT-D02E		E-004, E-007
24	CIRCUIT 9-S HTR CONTROLLER SPARE ENCL	CIRCUIT 9-S SPARE HTR 1	1-3C #1/0 W/ #6 GND	2" CONDUIT	CT-D02; CT-D06		E-004, E-007
25	ECS MCC-B UNIT 1ER	COOLING TOWER FAN #1 VFD	1-3C #8 W/ #10 GND	1-1/4" CONDUIT	CT-D02; CT-D04		E-004, E-007
26	COOLING TOWER FAN #1 VFD	COOLING TOWER FAN #1 DISC	1-3C #8 W/ #10 GND 1-2C #14 W/ #14 GND	1-1/4" CONDUIT	CT-D04; CT-D12	USE SHIELDED VFD CABLE; #14 IS FOR VFD CONTROL	E-004, E-007, E-009, E-018
26A	COOLING TOWER FAN #1 VFD	COOLING TOWER REM/LOCAL 35441	1-3C #14 W/ #14 GND	3/4" CONDUIT	CT-D04; CT-D12		E-007, E-009, E-018
27	COOLING TOWER FAN #1 DISC	COOLING TOWER FAN #1	1-3C #8 W/ #10 GND	1-1/4" CONDUIT		USE SHIELDED VFD CABLE	E-009
28	ECS MCC-B UNIT 1M	UNREGULATED POWER SUPPLY A	1-3C #8 W/ #8 GND	3/4" CONDUIT	CT-D02		E-004, E-007
29	ECS MCC-B UNIT 3J	CIRCUIT 10-S HTR CONTROLLER SPARE ENCL	1-3C #1/0 W/ #6 GND	2" CONDUIT	CT-D02E		E-004, E-007
30	CIRCUIT 10-S HTR CONTROLLER SPARE ENCL	CIRCUIT 10-S SPARE HTR 1	1-3C #1/0 W/ #6 GND	2" CONDUIT	CT-D02; CT-D06		E-004, E-007
31	ECS MCC-A UNIT 2EL	WATER/GLYCOL PUMP #1 STARTER	1-3C #2 W/ #8 GND	1-1/2" CONDUIT	CT-D02; CT-D05; CT-D11		E-004, E-007
32	WATER/GLYCOL PUMP #1 STARTER	WATER/GLYCOL PUMP #1	1-3C #2 W/ #8 GND	1-1/2" CONDUIT			E-004, E-007
32A	WATER/GLYCOL PUMP #1 STARTER	WATER/GLYCOL REM/LOCAL 35762	1-3C #14 W/ #14 GND	3/4" CONDUIT			E-007, E-017
33	ECS MCC-B UNIT 1EL	COOLING TOWER PUMP #1 STARTER	1-3C #1 W/ #6 GND	2" CONDUIT	CT-D02; CT-D04		E-004, E-007
34	COOLING TOWER PUMP #1 STARTER	COOLING TOWER PUMP #1 DISC	1-3C #1 W/ #6 GND 1-2C #14 W/ #14 GND	2" CONDUIT	CT-D04; CT-D12		E-004, E-007, E-009, E-018
34A	COOLING TOWER PUMP #1 STARTER	COOLING TOWER REM/LOCAL 35441	1-3C #14 W/ #14 GND	3/4" CONDUIT	CT-D04; CT-D12		E-007, E-009, E-018
35	COOLING TOWER PUMP #1 DISC	COOLING TOWER PUMP #1	1-3C #1 W/ #6 GND	2" CONDUIT			E-004, E-009
36	ECS MCC-A UNIT 2ER	NORTH STEAM BOILER DISC	1-3C #4 W/ #8 GND	1-1/4" CONDUIT	CT-D02; CT-D05		E-004, E-007
37	NORTH STEAM BOILER DISC	NORTH STEAM BOILER	1-3C #4 W/ #8 GND	1-1/4" CONDUIT			E-004, E-007
38	ECS MCC-A UNIT 3J	CIRCUIT 5-N HTR CONTROLLER SPARE ENCL	1-3C #4 W/ #8 GND	1-1/4" CONDUIT	CT-D02E		E-004, E-007
39	CIRCUIT 5-N HTR CONTROLLER SPARE ENCL	CIRCUIT 5-N SPARE HTR 2	1-3C #4 W/ #8 GND	1-1/4" CONDUIT	CT-D02; CT-D06		E-004, E-007
40	ECS MCC-A UNIT 1F	HTR CONTROLLER CS/ENG ENCL	1-3C #1/0 W/ #6 GND	2" CONDUIT	CT-D02E		E-004, E-007
41	HTR CONTROLLER CS/ENG ENCL	CS/ENG HTR 2	1-3C #1/0 W/ #6 GND	2" CONDUIT	CT-D02; CT-D06		E-004, E-007
42	ECS MCC-A UNIT 3M	HTR CONTROLLER EC/CC ENCL	1-3C #2 W/ #8 GND	1-1/2" CONDUIT	CT-D02E		E-004, E-007
43	HTR CONTROLLER EC/CC ENCL	EC/CC HTR 1	1-3C #2 W/ #8 GND	1-1/2" CONDUIT	CT-D02; CT-D06		E-004, E-007
44	ECS MCC-B UNIT 3L	CIRCUIT 4-I HTR CONTROLLER SPARE ENCL	1-3C #8 W/ #10 GND	1-1/4" CONDUIT	CT-D02E		E-004, E-007
45	CIRCUIT 4-I HTR CONTROLLER SPARE ENCL	CIRCUIT 4-I SPARE HTR 2	1-3C #8 W/ #10 GND	1-1/4" CONDUIT	CT-D02; CT-D06		E-004, E-007
46	ECS SWGR 1050B UNIT 2B	ICPS BLOWER #2 STARTER	3 #3/0, 1 #3	2" CONDUIT		REUSE EXISTING CONDUIT	E-005, E-007
47	ICPS BLOWER #2 STARTER	ICPS BLOWER #2	3 #3/0, 1 #3	2" CONDUIT		REUSE EXISTING CONDUIT	E-005, E-007
48	ECS SWGR 1050B UNIT 3A	NORTH BLOWER STARTER	3 #750 KCMIL, 1 #2/0	4" CONDUIT	CT-D02; CT-D04		E-005, E-007
49	NORTH BLOWER STARTER	NORTH BLOWER	3 #750 KCMIL, 1 #2/0	4" CONDUIT			E-005, E-007
50	NOT USED						
51	ECS MCC-D UNIT 2F	HTR CONTROLLER CS/AFT ENCL	3 #350 KCMIL, 1 #4	3" CONDUIT			E-005, E-007
52	HTR CONTROLLER CS/AFT ENCL	CS/AFT HTR 1	3 #350 KCMIL, 1 #4	3" CONDUIT			E-005, E-007
53	CHILLER #3 DISCONNECT	CHILLER #3	3 #750 KCMIL	4" CONDUIT		REUSE EXISTING CONDUIT	E-005, E-007
54	ECS MCC-D UNIT 2M	HTR CONTROLLER ICPS ENCL	1-3C #3/0 W/ #6 GND	2-1/2" CONDUIT	CT-D02E		E-005, E-007
55	HTR CONTROLLER ICPS ENCL	ICPS HTR 2	1-3C #3/0 W/ #6 GND	2-1/2" CONDUIT	CT-D02; CT-D06		E-005, E-007
56	ECS MCC-C UNIT 2M	HTR CONTROLLER CS/IT ENCL	1-3C #3/0 W/ #6 GND	2-1/2" CONDUIT	CT-D02E		E-005, E-007
57	HTR CONTROLLER CS/IT ENCL	CS/IT HTR 2	1-3C #3/0 W/ #6 GND	2-1/2" CONDUIT	CT-D02; CT-D06		E-005, E-007
58	ECS MCC-C UNIT 1F	HTR CONTROLLER CS/ENG ENCL	1-3C #1/0 W/ #6 GND	2" CONDUIT	CT-D02E		E-005, E-007
59	HTR CONTROLLER CS/ENG ENCL	CS/ENG HTR 1	1-3C #1/0 W/ #6 GND	2" CONDUIT	CT-D02; CT-D06		E-005, E-007
60	ECS MCC-C UNIT 2EL	SOUTH STEAM BOILER DISC	3 #4, 1 #8	1-1/4" CONDUIT		REUSE EXISTING CONDUIT	E-005, E-007
61	SOUTH STEAM BOILER DISC	SOUTH STEAM BOILER	3 #4, 1 #8	1-1/4" CONDUIT			E-005, E-007
62	ECS MCC-D UNIT 3J	CIRCUIT 10-S HTR CONTROLLER SPARE ENCL	1-3C #1/0 W/ #6 GND	2" CONDUIT	CT-D02E		E-005, E-007
63	CIRCUIT 10-S HTR CONTROLLER SPARE ENCL	CIRCUIT 10-S SPARE HTR 2	1-3C #1/0 W/ #6 GND	2" CONDUIT	CT-D02; CT-D06		E-005, E-007
64	ECS MCC-C UNIT 2C	CIRCUIT 9-S HTR CONTROLLER SPARE ENCL	1-3C #1/0 W/ #6 GND	2" CONDUIT	CT-D02E		E-005, E-007
65	CIRCUIT 9-S HTR CONTROLLER SPARE ENCL	CIRCUIT 9-S SPARE HTR 2	1-3C #1/0 W/ #6 GND	2" CONDUIT	CT-D02; CT-D06		E-005, E-007
66	ECS MCC-C UNIT 2FR	SF-6 DISC	1-3C #12 W/ #12 GND	3/4" CONDUIT	CT-D02; CT-D05; CT-D11		E-005, E-007
67	ECS MCC-D UNIT 1M	UNREGULATED POWER SUPPLY B	1-3C #8 W/ #8 GND	3/4" CONDUIT	CT-D02		E-004, E-007
68	ECS MCC-C UNIT 2ER	WATER/GLYCOL PUMP #2 STARTER	1-3C #2 W/ #8 GND	1-1/2" CONDUIT	CT-D02; CT-D05; CT-D11		E-005, E-007
69	WATER/GLYCOL PUMP #2 STARTER	WATER/GLYCOL PUMP #2	1-3C #2 W/ #8 GND	1-1/2" CONDUIT			E-005, E-007
69A	WATER/GLYCOL PUMP #2 STARTER	WATER/GLYCOL REM/LOCAL 35762	1-3C #14 W/ #14 GND	3/4" CONDUIT			E-007, E-017
70	ECS MCC-D UNIT 1EL	COOLING TOWER PUMP #2 STARTER	1-3C #1 W/ #6 GND	2" CONDUIT	CT-D02; CT-D04; CT-D12		E-004, E-007
71	COOLING TOWER PUMP #2 STARTER	COOLING TOWER PUMP #2 DISC	1-3C #1 W/ #6 GND 1-2C #14 W/ #14 GND	2" CONDUIT	CT-D04; CT-D12		E-004, E-007, E-009, E-018
71A	COOLING TOWER PUMP #2 STARTER	COOLING TOWER REM/LOCAL 35441	1-3C #14 W/ #14 GND	3/4" CONDUIT	CT-D04; CT-D12		E-007, E-009, E-018
72	COOLING TOWER PUMP #2 DISC	COOLING TOWER PUMP #2	1-3C #1 W/ #6 GND	2" CONDUIT			E-004, E-009

INSTALLATION CONDUIT AND CABLE SCHEDULE (CONTINUED)

CABLE NO.	FROM	TO	CONDUCTOR	CONDUIT	CABLE TRAY DESIGNATOR	COMMENTS	SHEET
73	ECS MCC-D UNIT 3F	HTR CONTROLLER LAS ENCL	1-3C #2 W/ #8 GND	1-1/2" CONDUIT	CT-D02E		E-004, E-007
74	HTR CONTROLLER LAS ENCL	LAS HTR 2	1-3C #2 W/ #8 GND	1-1/2" CONDUIT	CT-D02; CT-D06		E-004, E-007
75	ECS MCC-C UNIT 3M	HTR CONTROLLER EC/CC ENCL	1-3C #2 W/ #8 GND	1-1/2" CONDUIT	CT-D02E		E-004, E-007
76	HTR CONTROLLER EC/CC ENCL	EC/CC HTR 2	1-3C #2 W/ #8 GND	1-1/2" CONDUIT	CT-D02; CT-D06		E-004, E-007
77	ECS MCC-D UNIT 1D	HTR CONTROLLER SM ENCL	1-3C #2 W/ #6 GND	2" CONDUIT	CT-D02E		E-004, E-007
78	HTR CONTROLLER SM ENCL	SM HTR 2	1-3C #2 W/ #6 GND	2" CONDUIT	CT-D02; CT-D06		E-004, E-007
79	ECS MCC-C UNIT 3J	CIRCUIT 5-N HTR CONTROLLER SPARE ENCL	1-3C #4 W/ #8 GND	1-1/4" CONDUIT	CT-D02E		E-004, E-007
80	CIRCUIT 5-N HTR CONTROLLER SPARE ENCL	CIRCUIT 5-N SPARE HTR 1	1-3C #4 W/ #8 GND	1-1/4" CONDUIT	CT-D02; CT-D06		E-004, E-007
81	ECS MCC-C UNIT 3F	HTR CONTROLLER CS/FS ENCL	1-3C #2/0 W/ #6 GND	2" CONDUIT	CT-D02E		E-004, E-007
82	HTR CONTROLLER CS/FS ENCL	CS/FS HTR 1	1-3C #2/0 W/ #6 GND	2" CONDUIT	CT-D02; CT-D06		E-004, E-007
83	ECS MCC-D UNIT 3L	CIRCUIT 4-I HTR CONTROLLER SPARE 4 ENCL	1-3C #8 W/ #10 GND	1-1/4" CONDUIT	CT-D02E		E-004, E-007
84	CIRCUIT 4-I HTR CONTROLLER SPARE 4 ENCL	CIRCUIT 4-I SPARE 4 HTR 1	1-3C #8 W/ #10 GND	1-1/4" CONDUIT	CT-D02; CT-D06		E-004, E-007
85	ECS MCC-A UNIT 1M	REGULATED POWER SUPPLY A	1-3C #8 W/ #8 GND	3/4" CONDUIT	CT-D02		E-004, E-007
86	ECS MCC-C UNIT 1M	REGULATED POWER SUPPLY B	1-3C #8 W/ #8 GND	3/4" CONDUIT	CT-D02		E-005, E-007
87	PANEL ECS CB 03	COOLING TOWER FAN #2 VFD	1-3C #8 W/ #10 GND	1-1/4" CONDUIT	CT-D02; CT-D04		E-004, E-007
88	COOLING TOWER FAN #2 VFD	COOLING TOWER FAN #2 DISC	1-3C #8 W/ #10 GND 1-2C #14 W/ #14 GND	1-1/4" CONDUIT	CT-D04; CT-D12	USE SHIELDED VFD CABLE; #14 IS FOR VFD CONTROL	E-004, E-007, E-009, E-018
88A	COOLING TOWER FAN #2 VFD	COOLING TOWER REM/LOCAL 35441	1-3C #14 W/ #14 GND	3/4" CONDUIT	CT-D04; CT-D12		E-007, E-009, E-018
89	COOLING TOWER FAN #2 DISC	COOLING TOWER FAN #2	1-3C #8 W/ #10 GND	1-1/4" CONDUIT		USE SHIELDED VFD CABLE	E-009
90	ECS MCC-D UNIT 1ER	COOLING TOWER FAN #3 VFD	1-3C #8 W/ #10 GND	1-1/4" CONDUIT	CT-D02; CT-D04		E-004, E-007
91	COOLING TOWER FAN #3 VFD	COOLING TOWER FAN #3 DISC	1-3C #8 W/ #10 GND 1-2C #14 W/ #14 GND	1-1/4" CONDUIT	CT-D04; CT-D12	USE SHIELDED VFD CABLE; #14 IS FOR VFD CONTROL	E-004, E-007, E-009, E-018
91A	COOLING TOWER FAN #3 VFD	COOLING TOWER REM/LOCAL 35441	1-3C #14 W/ #14 GND	3/4" CONDUIT	CT-D04; CT-D12		E-007, E-009, E-018
92	COOLING TOWER FAN #3 DISC	COOLING TOWER FAN #3	1-3C #8 W/ #10 GND	1-1/4" CONDUIT		USE SHIELDED VFD CABLE	E-009
93	SUBSTATION 1052A UNIT 2B	MCC-A UNIT 1C	(2) 3 #600 KCMIL, 1 #1/0	(2) 3" CONDUIT		TWO SETS	E-004
94	SUBSTATION 1040A UNIT 3A	MCC-B UNIT 3C	(2) 3 #600 KCMIL, 1 #1/0	(2) 3" CONDUIT		TWO SETS	E-004
95	SUBSTATION 1040B UNIT 7C	MCC-C UNIT 1C	(2) 3 #600 KCMIL, 1 #1/0	(2) 3" CONDUIT		TWO SETS	E-004
96	SUBSTATION 1052B UNIT 5D	MCC-D UNIT 3C	(2) 3 #600 KCMIL, 1 #1/0	(2) 3" CONDUIT		TWO SETS	E-004

MOTOR STARTER SCHEDULE ECS ROOM

DESCRIPTION	VOLTAGE	STARTER TYPE	SIZE (HP)	SCHEMATIC DRAWING	A-NUMBER
ICPS BLOWER #1	480V 3-PH	RVSS	125	E-017	A199548
SOUTH BLOWER	480V 3-PH	RVSS	350	E-017	A199545
ICPS BLOWER #2	480V 3-PH	RVSS	125	E-017	A199549
NORTH BLOWER	480V 3-PH	RVSS	350	E-017	A199546
STANDBY BLOWER	480V 3-PH	RVSS	350	E-017	A199547
COOLING TOWER FAN #1	480V 3-PH	VFD	20	E-018	A201224
COOLING TOWER FAN #2	480V 3-PH	VFD	20	E-018	A201225
COOLING TOWER FAN #3	480V 3-PH	VFD	20	E-018	A201226
COOLING TOWER COND. PUMP #1	480V 3-PH	RVSS	60	E-018	A201227
COOLING TOWER COND. PUMP #2	480V 3-PH	RVSS	60	E-018	A201228
WATER/GLYCOL PUMP #1	480V 3-PH	RVSS	50	E-018	A201229
WATER/GLYCOL PUMP #2	480V 3-PH	RVSS	50	E-018	A201230

E0-1-79K39602

SYM	ZONE	DESCRIPTION	DATE	APPROVED
		REVISIONS		

JACOBS
Jacobs Technology Inc.

NATIONAL AERONAUTICS AND SPACE ADMINISTRATION
JOHN F. KENNEDY SPACE CENTER, NASA
KENNEDY SPACE CENTER, FLORIDA

SIGNATURES		DATE
DRAWN	MARTIN HENNIGH	3/07/14
CHECKED	JERRY HUNT	4/01/14
SUBMITTED	BRIAN GARLAND	4/01/14
ST OF LICENSURE: TN LICENSE NO: 00113330		
APPROVED	GLEN WARD	4/01/14
	DUNG TRANG	4/01/14

KSC LAUNCH PAD 39-B
ENVIRONMENTAL CONTROL SYSTEM (ECS) REFURBISHMENT
ELECTRICAL SCHEDULES
INSTALLATION

FILE NO. | SIZE F | DWG.NO. 79K39602 | REV

PCN. NO. 98898 | SHEET 74 OF 187

E-020

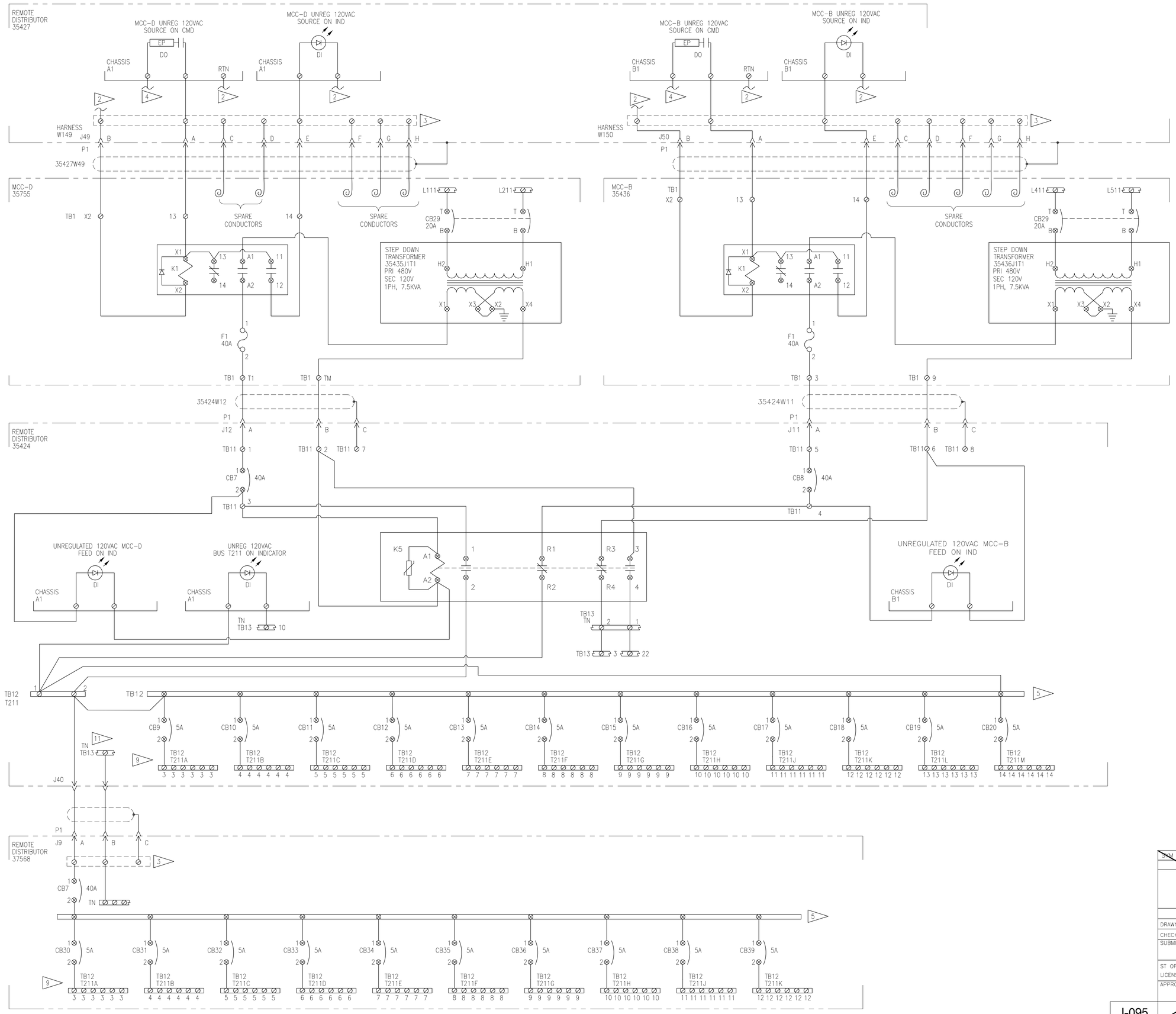

NOTES:

1. THIS SCHEMATIC IS TO BE USED IN CONJUNCTION WITH THE PLC AND REMOTE DISTRIBUTOR TAG INDEX TABLES. WIRING TERMINATIONS AND INTERFACE CONNECTOR ASSIGNMENTS ARE DEFINED IN THE REMOTE DISTRIBUTION CABINET TAG INDEX TABLES.
2. TO POWER RETURN/NEUTRAL LOCATED IN REMOTE DISTRIBUTOR ENCLOSURE.
3. THE CONTRACTOR SHALL USE THE EXISTING FIELD INTERFACE TERMINAL BLOCKS FOR CONNECTION OF THE PLC I/O TO THE ENCLOSURE INTERFACE CONNECTORS. IF ADDITIONAL TERMINAL BLOCKS ARE REQUIRED THE CONTRACTOR SHALL PROVIDE AND INSTALL.
4. TO SIGNAL/CONTROL POWER SOURCE BUS LOCATED IN REMOTE DISTRIBUTOR ENCLOSURE.
5. CIRCUIT BREAKER BUS BAR.
6. THIS SCHEMATIC SHALL BE USED FOR THE UNREGULATED 110VAC DISTRIBUTION TO THE ECS EQUIPMENT AND INSTRUMENTATION DETAILED IN THE INSTRUMENTATION DRAWINGS AND SPECIFICATIONS.
7. ALL WIRING ON THIS DRAWING IS CURRENTLY RUN AND TERMINATED. CONTRACTOR SHALL VERIFY THAT ALL TERMINATIONS ARE CORRECT PER THE REMOTE DISTRIBUTION ENCLOSURE TAG INDEXES AND THIS SCHEMATIC.
8. CONTRACTOR SHALL BE RESPONSIBLE FOR VALIDATION AND VERIFICATION OF ALL EQUIPMENT AND PLC I/O PARAMETERS ON THIS SHEET.
9. CONTRACTOR SHALL PROVIDE AND INSTALL ADDITIONAL DEVICE POWER BREAKERS AS REQUIRED TO CONNECT ANY NEW ECS INSTRUMENTATION SPECIFIED IN THE INSTRUMENTATION DRAWINGS AND SPECIFICATIONS.
10. THE UNREGULATED POWER SHALL ONLY BE USED FOR THE DEVICES SPECIFIED IN THE INSTRUMENTATION DRAWINGS. ANY ADDITIONAL DEVICE CONNECTION TO THE UNREGULATED 110VAC SHALL BE APPROVED BY THE NASA CONTRACTING OFFICER.
11. CONTRACTOR SHALL ADD ANY REQUIRED TERMINAL BLOCKS TO CONNECT THE UNREGULATED 110VAC BETWEEN TB12 AND CONNECTOR 35424-J40.

EO-1-79K39602

SYM	ZONE	DESCRIPTION	DATE	APPROVED
		REVISIONS		

JACOBS
Jacobs Technology Inc.

SIGNATURES		DATE
DRAWN	M. HENNIGH	3/07/14
CHECKED	J. WHITEFORD	4/01/14
SUBMITTED	S. RITTER	4/01/14
ST OF LICENSURE: TN LICENSE NO: 00110556		
APPROVED	G. WARD	4/01/14
	S. HUNT	4/01/14

NATIONAL AERONAUTICS AND SPACE ADMINISTRATION
JOHN F. KENNEDY SPACE CENTER, NASA
KENNEDY SPACE CENTER, FLORIDA

KSC LAUNCH PAD 39-B
ENVIRONMENTAL CONTROL SYSTEM (ECS) REFURBISHMENT

INSTRUMENTATION
REMOTE I/O 35424 UNREGULATED
AC POWER SCHEMATIC

I-095

FILE NO.	SIZE	DWG.NO.	REV
	F	79K39602	

PCN. NO. 98898 SHEET 178 OF 187