KSC LAUNCH PAD 39-B ENVIRONMENTAL CONTROL SYSTEM REFURBISHMENT

SPECIFICATION: 79K39603

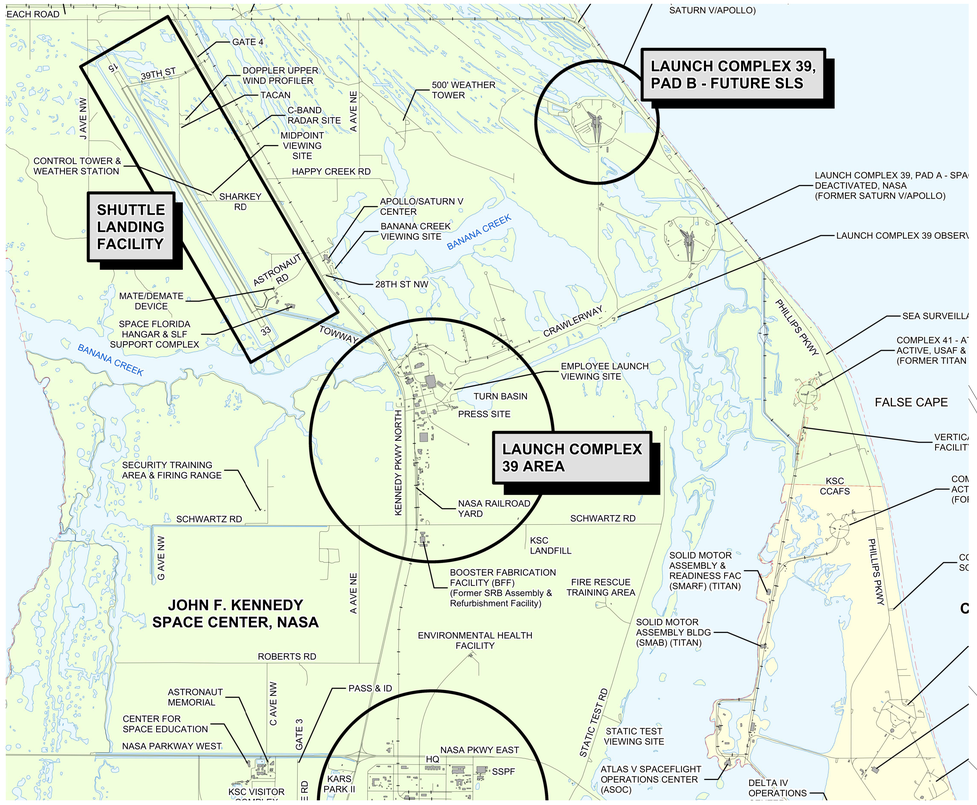

VICINITY MAP
SCALE: NONE

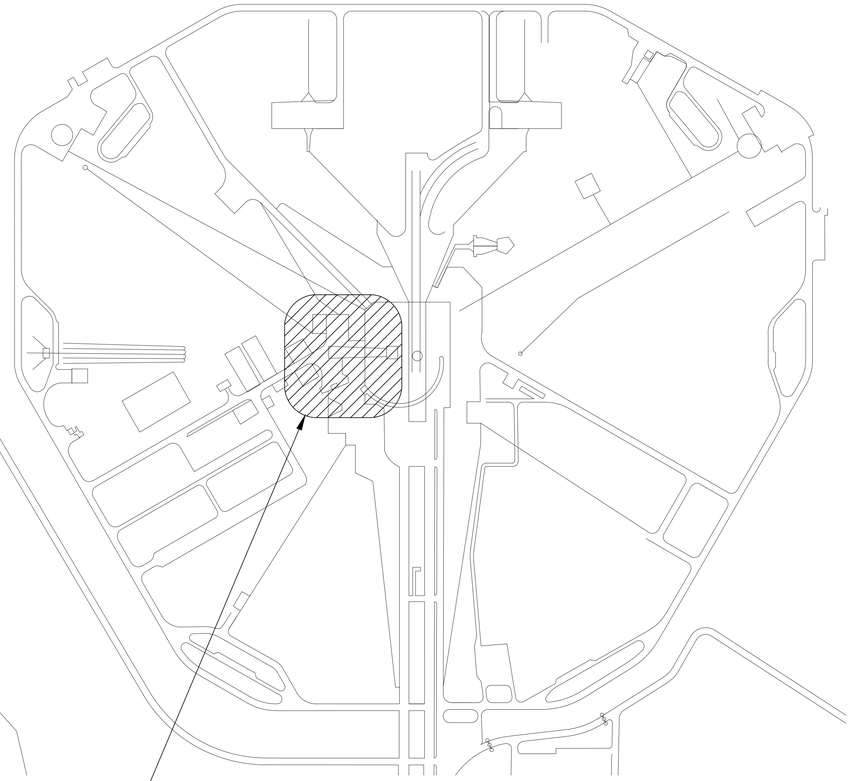

SITE MAP – LC39B
SCALE: NONE

DOCUMENT INFORMATION: (TITLE, NUMBER, REV, DATE)

KSC LAUNCH PAD 39-B ENVIRONMENTAL CONTROL SYSTEM REFURBISHMENT

SENSITIVE BUT UNCLASSIFIED (SBU)

INSTRUCTIONS: This item must be reviewed under the requirements for "Sensitive But Unclassified Information" as described in NPR 1600.1, Chapter 5.

http://nodis-dms.gsfc.nasa.gov

	Yes	No	SBU Reviewer's Signature	Date	Company / Org
Document contains SBU?	☐	☐			

EXPORT CONTROL (EC)

INSTRUCTIONS: Attach the document requiring an export determination. Contact the KSC ECO Help Desk (867-9209) for help in completing this form.

http://exportcontrol.ksc.nasa.gov/

Contractor EC Reviewer's Name and Organization	Contractor EC Reviewer's Signature	Date

NASA ECO Reviewer's Name and Organization	NASA ECO Reviewer's Signature	Date

	EXPORT DETERMINATION (Check one box only)	
EAR 99	☐ NLR	The information contained in the document is technical in content, but is not technical data as defined by the ITAR or the EAR, and therefore is EAR 99 NLR (no export license required). [General Prohibition Six (Embargo) applies to all items subject to the EAR, i.e. items on the CCL and within EAR 99 NLR. You may not make an export or re-export contrary to the provisions of part 746 (Embargos and Other Special Controls) of the EAR and 22 CFR part 126.1 of the ITAR.]
EAR Controlled	☐	This document is within the purview of the Export Administration Regulations (EAR), 15 CFR 730-774, and is export controlled. It may not be transferred to foreign nationals in the U.S. or abroad without specific approval of a knowledgeable NASA export control official, and/or unless an export license or license exception is obtained/available from the Bureau of Industry and Security, United States Department of Commerce. Violations of these regulations are punishable by fine, imprisonment, or both.
ITAR Controlled	☐	This document contains information which falls under the purview of the U.S. Munitions List (USML), as defined in the International Traffic in Arms Regulations (ITAR), 22 CFR 120-130, and is export controlled. It shall not be transferred to foreign nationals, in the U.S. or abroad, without specific approval of a knowledgeable NASA export control official, and/or unless an export license or license exemption is obtained/available from the United States Department of State. *Violations of these regulations are punishable by fine, imprisonment, or both.*

SYM	ZONE	DESCRIPTION	DATE	APPROVED
REVISIONS				

JACOBS
Jacobs Technology Inc.

SIGNATURES		DATE
DRAWN	MIKE VANHOOSE	3/07/14
CHECKED		3/07/14
SUBMITTED	GLEN E. WARD	3/07/14
APPROVED	JOHN A. LOBODA	3/07/14
	LORI N. JONES	3/07/14
	PHIL BENNARDO	3/07/14

NATIONAL AERONAUTICS AND SPACE ADMINISTRATION
JOHN F. KENNEDY SPACE CENTER, NASA
KENNEDY SPACE CENTER, FLORIDA

KSC LAUNCH PAD 39-B
ENVIRONMENTAL CONTROL SYSTEM (ECS) REFURBISHMENT
COVER SHEET

FILE NO.	SIZE	DWG.NO.	REV
	F	79K39602	
PCN. NO. 98898		SHEET 1 OF 187	

V-001

GENERAL

DWGNUM	SHEET	REV	Status	ISSUED DATE	TITLE
V-001	1 OF 187		FINAL	3/7/2014	COVER SHEET
V-002	2 OF 187		FINAL	3/7/2014	DRAWING LIST
V-003	3 OF 187		FINAL	3/7/2014	MECHANICAL INSTALLATION HAZARDOUS MATERIALS SCHEDULE
V-004	4 OF 187		FINAL	3/7/2014	MECHANICAL INSTALLATION HAZARDOUS MATERIALS LOCATIONS

PROCESS

DWGNUM	SHEET	REV	Status	ISSUED DATE	TITLE
M-001	5 OF 187		FINAL	3/7/2014	MECHANICAL SYMBOLS & ABBREVIATIONS
M-002	6 OF 187		FINAL	3/7/2014	MECHANICAL GENERAL NOTES
M-003	7 OF 187		FINAL	3/7/2014	ECS SYSTEM PURGE AIR SCHEMATIC DEMOLITION
M-004	8 OF 187		FINAL	3/7/2014	ECS SYSTEM PURGE AIR PLAN VIEW DEMOLITION
M-005	9 OF 187		FINAL	3/7/2014	ECS SYSTEM PURGE AIR ELEVATION DEMOLITION
M-006			FINAL	3/7/2014	NOT USED
M-007	10 OF 187		FINAL	3/7/2014	ECS SYSTEM PURGE AIR SCHEMATIC
M-008	11 OF 187		FINAL	3/7/2014	ECS SYSTEM PURGE AIR SCHEMATIC CONTINUED
M-009	12 OF 187		FINAL	3/7/2014	ECS SYSTEM PURGE AIR SCHEMATIC CONTINUED
M-010	13 OF 187		FINAL	3/7/2014	ECS SYSTEM PURGE AIR SCHEMATIC CONTINUED
M-011	14 OF 187		FINAL	3/7/2014	ECS SYSTEM PURGE AIR EQUIPMENT SCHEDULE
M-012	14 OF 187		FINAL	3/7/2014	ECS SYSTEM PURGE AIR EQUIPMENT SCHEDULE
M-013	16 OF 187		FINAL	3/7/2014	ECS SYSTEM PURGE AIR EQUIPMENT SCHEDULE CONTINUED
M-014	17 OF 187		FINAL	3/7/2014	ECS SYSTEM PURGE AIR EQUIPMENT SCHEDULE CONTINUED
M-015	18 OF 187		FINAL	3/7/2014	ECS SYSTEM PURGE AIR PLAN VIEW
M-016	19 OF 187		FINAL	3/7/2014	ECS SYSTEM PURGE AIR HORIZONTAL TUNNEL ELEVATION
M-017	20 OF 187		FINAL	3/7/2014	ECS SYSTEM PURGE AIR VERTICAL TUNNEL ELEVATION
M-018	21 OF 187		FINAL	3/7/2014	ECS SYSTEM PURGE AIR STUB TOWER ELEVATION
M-019	22 OF 187		FINAL	3/7/2014	ECS SYSTEM PURGE AIR STUB TOWER SECTIONS
M-020	23 OF 187		FINAL	3/7/2014	ECS SYSTEM PURGE AIR STUB TOWER SECTIONS CONTINUED
M-021	24 OF 187		FINAL	3/7/2014	ECS SYSTEM PURGE AIR SECTIONS, DETAILS AND ISOMETRIC
M-022	25 OF 187		FINAL	3/7/2014	ECS SYSTEM PURGE AIR SECTIONS, DETAILS AND ISOMETRIC CONTINUED
M-023	26 OF 187		FINAL	3/7/2014	ECS SYSTEM PURGE AIR SECTIONS, DETAILS AND ISOMETRIC CONTINUED
M-024	27 OF 187		FINAL	3/7/2014	ECS SYSTEM PURGE AIR SECTIONS, DETAILS AND ISOMETRIC CONTINUED
M-025	28 OF 187		FINAL	3/7/2014	ECS SYSTEM PURGE AIR SECTIONS, DETAILS AND ISOMETRIC CONTINUED
M-026	29 OF 187		FINAL	3/7/2014	COOLING TOWER PIPING PLAN VIEW DEMOLITION
M-027	30 OF 187		FINAL	3/7/2014	ECS ROOM PIPING LAYOUT DEMOLITION
M-028	31 OF 187		FINAL	3/7/2014	CONDENSER WATER AND WATER GLYCOL P&ID
M-029	32 OF 187		FINAL	3/7/2014	CONDENSER WATER AND WATER GLYCOL P&ID CONTINUED
M-030	33 OF 187		FINAL	3/7/2014	CONDENSER WATER AND WATER GLYCOL P&ID CONTINUED
M-031	34 OF 187		FINAL	3/7/2014	CONDENSER WATER AND WATER GLYCOL EQUIPMENT SCHEDULE
M-032	35 OF 187		FINAL	3/7/2014	CONDENSER WATER AND WATER GLYCOL EQUIPMENT SCHEDULE CONTINUED
M-033	36 OF 187		FINAL	3/7/2014	CONDENSER WATER AND WATER GLYCOL EQUIPMENT SCHEDULE CONTINUED
M-034	37 OF 187		FINAL	3/7/2014	COOLING TOWER PLAN VIEW
M-035	38 OF 187		FINAL	3/7/2014	ECS ROOM PIPING PLAN VIEW
M-036	39 OF 187		FINAL	3/7/2014	ECS ROOM PIPING SECTIONS, DETAILS AND ISOMETRIC
M-037	40 OF 187		FINAL	3/7/2014	ECS ROOM PIPING SECTIONS, DETAILS AND ISOMETRIC CONTINUED
M-038	41 OF 187		FINAL	3/7/2014	BOILER AND STEAM PIPING – DEMOLITION
M-039	42 OF 187		FINAL	3/7/2014	BOILER AND STEAM SCHEMATIC
M-040	43 OF 187		FINAL	3/7/2014	BOILER AND STEAM SCHEMATIC CONTINUED
M-041	44 OF 187		FINAL	3/7/2014	BOILER AND STEAM EQUIPMENT SCHEDULE
M-042	45 OF 187		FINAL	3/7/2014	BOILER AND STEAM PLAN VIEW AND SECTIONS AND DETAILS
M-043	46 OF 187		FINAL	3/7/2014	GN2 PRESSURE REDUCING STATION AND PIPING DEMOLITION
M-044	47 OF 187		FINAL	3/7/2014	GN2 PRESSURE REDUCING STATION PLAN VIEW AND SECTIONS AND DETAILS
M-045	48 OF 187		FINAL	3/7/2014	MECHANICAL INSTALLATION EQUIPMENT SCHEDULES
M-046	49 OF 187		FINAL	3/7/2014	MECHANICAL INSTALLATION EQUIPMENT SCHEDULES CONTINUED
M-047	50 OF 187		FINAL	3/7/2014	MECHANICAL INSTALLATION TYPICAL PIPING SUPPORT DETAILS
M-048	51 OF 187		FINAL	3/7/2014	ECS SYSTEM PURGE AIR DUCTING MODIFICATION PLAN VIEW
M-049	52 OF 187		FINAL	3/7/2014	ECS SYSTEM PURGE AIR DUCTING MODIFICATION ELEVATION VIEW

FIRE PROTECTION

DWGNUM	SHEET	REV	Status	ISSUED DATE	TITLE
FP-001	53 OF 187		FINAL	3/7/2014	ECS ROOM FIRE PROTECTION DEMOLITION
FP-002	54 OF 187		FINAL	3/7/2014	ECS ROOM FIRE PROTECTION

STRUCTURAL

DWGNUM	SHEET	REV	Status	ISSUED DATE	TITLE
S-001	77 OF 187		FINAL	3/7/2014	ECS SYSTEM STUB TOWER MODIFICATION STRUCTURAL GENERAL NOTES
S-002	78 OF 187		FINAL	3/7/2014	ECS SYSTEM STUB TOWER MODIFICATION ELEVATION VIEWS
S-003	79 OF 187		FINAL	3/7/2014	ECS SYSTEM STUB TOWER MODIFICATION SECTION AND DETAILS
S-004	80 OF 187		FINAL	3/7/2014	ECS SYSTEM STUB TOWER MODIFICATION ROOF PLAN EL 95'-1"
S-005	81 OF 187		FINAL	3/7/2014	ECS SYSTEM STUB TOWER MODIFICATION PLAN EL 92'-6"
S-006	82 OF 187		FINAL	3/7/2014	ECS SYSTEM BLOWER FOUNDATION DETAILS
S-007	83 OF 187		FINAL	3/7/2014	ECS SYSTEM ECS ROOM WALL PENETRATION PATCH

ELECTRICAL

DWGNUM	SHEET	REV	Status	ISSUED DATE	TITLE
E-001	55 OF 187		FINAL	3/7/2014	ELECTRICAL SYMBOLS, NOTES & ABBREVIATIONS
E-002	56 OF 187		FINAL	3/7/2014	SINGLE LINE DIAGRAM SWGR-A, MCC-A, AND PANEL ECS DEMOLITION
E-003	57 OF 187		FINAL	3/7/2014	SINGLE LINE DIAGRAM SWGR-B AND MCC-B DEMOLITION
E-004	58 OF 187		FINAL	3/7/2014	SINGLE LINE DIAGRAM SWGR-A, MCC-A, AND PANEL ECS INSTALLATION
E-005	59 OF 187		FINAL	3/7/2014	SINGLE LINE DIAGRAM SWGR-B AND MCC-B INSTALLATION
E-006	60 OF 187		FINAL	3/7/2014	ECS ROOM ELECTRICAL SYSTEM LAYOUT DEMOLITION
E-007	61 OF 187		FINAL	3/7/2014	ECS ROOM ELECTRICAL SYSTEM LAYOUT INSTALLATION
E-008	62 OF 187		FINAL	3/7/2014	COOLING TOWER ELECTRICAL SYSTEM LAYOUT DEMOLITION
E-009	63 OF 187		FINAL	3/7/2014	COOLING TOWER ELECTRICAL SYSTEM LAYOUT INSTALLATION
E-010	64 OF 187		FINAL	3/7/2014	ELECTRICAL DETAILS AND ELEVATIONS ECS SWITCHGEAR 1050A, 1050B, AND MCC-A
E-011	65 OF 187		FINAL	3/7/2014	ELECTRICAL DETAILS AND ELEVATIONS MCC-B
E-012	66 OF 187		FINAL	3/7/2014	ELECTRICAL DETAILS AND ELEVATIONS DEMOLITION AND INSTALLATION
E-013	67 OF 187		FINAL	3/7/2014	ELECTRICAL EQUIPMENT RACK FRAMING PLAN & ELEVATION
E-014	68 OF 187		FINAL	3/7/2014	ECS ROOM LIGHTING SYSTEM LAYOUT INSTALLATION
E-015	69 OF 187		FINAL	3/7/2014	ELECTRICAL SCHEMATICS SHEET 1
E-016	70 OF 187		FINAL	3/7/2014	ELECTRICAL SCHEMATICS SHEET 2
E-017	71 OF 187		FINAL	3/7/2014	ELECTRICAL SCHEMATICS SHEET 3
E-018	72 OF 187		FINAL	3/7/2014	ELECTRICAL SCHEMATICS SHEET 4
E-019	73 OF 187		FINAL	3/7/2014	ELECTRICAL SCHEDULES DEMOLITION
E-020	74 OF 187		FINAL	3/7/2014	ELECTRICAL SCHEDULES INSTALLATION
E-021	75 OF 187		FINAL	3/7/2014	ELECTRICAL GROUNDING PLAN – EXISTING
E-022	76 OF 187		FINAL	3/7/2014	ELECTRICAL GROUNDING PLAN – NEW

INSTRUMENTATION

DWGNUM	SHEET	REV	Status	ISSUED DATE	TITLE
I-001	84 OF 187		FINAL	3/7/2014	INSTRUMENTATION GENERAL NOTES
I-002	85 OF 187		FINAL	3/7/2014	INSTRUMENTATION ABBREVIATIONS AND SYMBOLS
I-003	86 OF 187		FINAL	3/7/2014	INSTRUMENTATION EXISTING EQUIPMENT AND DEMOLITION SCHEDULE SHEET 1
I-004	87 OF 187		FINAL	3/7/2014	INSTRUMENTATION EXISTING EQUIPMENT AND DEMOLITION SCHEDULE SHEET 2
I-005	88 OF 187		FINAL	3/7/2014	INSTRUMENTATION EXISTING EQUIPMENT AND DEMOLITION SCHEDULE SHEET 3
I-006	89 OF 187		FINAL	3/7/2014	INSTRUMENTATION EXISTING EQUIPMENT LOCATIONS AND DEMOLITION ECS ROOM
I-007	90 OF 187		FINAL	3/7/2014	INSTRUMENTATION EXISTING EQUIPMENT LOCATIONS AND DEMOLITION COOLING TOWER AREA
I-008	91 OF 187		FINAL	3/7/2014	INSTRUMENTATION EXISTING CABLE TRAY LOCATIONS & NEW INSTALLATION LOCATIONS
I-009	92 OF 187		FINAL	3/7/2014	INSTRUMENTATION NEW EQUIPMENT SCHEDULE SHEET 1
I-010	93 OF 187		FINAL	3/7/2014	INSTRUMENTATION NEW EQUIPMENT SCHEDULE SHEET 2
I-011	94 OF 187		FINAL	3/7/2014	INSTRUMENTATION NEW EQUIPMENT SCHEDULE SHEET 3
I-012	95 OF 187		FINAL	3/7/2014	INSTRUMENTATION NEW EQUIPMENT LOCATIONS ECS ROOM
I-013	96 OF 187		FINAL	3/7/2014	INSTRUMENTATION NEW EQUIPMENT LOCATIONS COOLING TOWER AREA
I-014	97 OF 187		FINAL	3/7/2014	INSTRUMENTATION 28VDC DISTRIBUTION
I-015	98 OF 187		FINAL	3/7/2014	INSTRUMENTATION ECS NETWORK PLAN
I-016	99 OF 187		FINAL	3/7/2014	INSTRUMENTATION ECS LP SYSTEM A1/B1 CHASSIS 35423 DEMOLITION & MODIFICATION SHEET 1
I-017	100 OF 187		FINAL	3/7/2014	INSTRUMENTATION ECS LP SYSTEM A1/B1 CHASSIS 35423 DEMOLITION & MODIFICATION SHEET 2
I-018	101 OF 187		FINAL	3/7/2014	INSTRUMENTATION ECS LP SYSTEM A1/B1 CHASSIS 35423 TAG INDEX SHEET1
I-019	102 OF 187		FINAL	3/7/2014	INSTRUMENTATION ECS LP SYSTEM A1/B1 CHASSIS 35423 TAG INDEX SHEET 2
I-020	103 OF 187		FINAL	3/7/2014	INSTRUMENTATION ECS LP SYSTEM A1/B1 CHASSIS 35423 TAG INDEX SHEET 3
I-021	104 OF 187		FINAL	3/7/2014	INSTRUMENTATION ECS LP SYSTEM A1/B1 CHASSIS 35423 TAG INDEX SHEET 4
I-022	105 OF 187		FINAL	3/7/2014	INSTRUMENTATION ECS LP SYSTEM A1/B1 CHASSIS 35423 CONTROLS ONE-LINE
I-023	106 OF 187		FINAL	3/7/2014	INSTRUMENTATION ECS LP SYSTEM A1/B1 CHASSIS 35424 DEMOLITION & MODIFICATION SHEET 1
I-024	107 OF 187		FINAL	3/7/2014	INSTRUMENTATION ECS LP SYSTEM A1/B1 CHASSIS 35424 DEMOLITION & MODIFICATION SHEET 2
I-025	108 OF 187		FINAL	3/7/2014	INSTRUMENTATION ECS LP SYSTEM A1/B1 CHASSIS 35424 TAG INDEX SHEET 1
I-026	109 OF 187		FINAL	3/7/2014	INSTRUMENTATION ECS LP SYSTEM A1/B1 CHASSIS 35424 TAG INDEX SHEET 2
I-027	110 OF 187		FINAL	3/7/2014	INSTRUMENTATION ECS LP SYSTEM A1/B1 CHASSIS 35424 TAG INDEX SHEET 3
I-028	111 OF 187		FINAL	3/7/2014	INSTRUMENTATION ECS LP SYSTEM A1/B1 CHASSIS 35424 TAG INDEX SHEET 4
I-029	112 OF 187		FINAL	3/7/2014	INSTRUMENTATION ECS LP SYSTEM A1/B1 CHASSIS 35424 CONTROLS ONE-LINE
I-030	113 OF 187		FINAL	3/7/2014	INSTRUMENTATION ECS LP SYSTEM A1/B1 CHASSIS 35425 DEMOLITION & MODIFICATION SHEET 1
I-031	114 OF 187		FINAL	3/7/2014	INSTRUMENTATION ECS LP SYSTEM A1/B1 CHASSIS 35425 DEMOLITION & MODIFICATION SHEET 2
I-032	115 OF 187		FINAL	3/7/2014	INSTRUMENTATION ECS LP SYSTEM A1/B1 CHASSIS 35425 TAG INDEX SHEET 1
I-033	116 OF 187		FINAL	3/7/2014	INSTRUMENTATION ECS LP SYSTEM A1/B1 CHASSIS 35425 TAG INDEX SHEET 2
I-034	117 OF 187		FINAL	3/7/2014	INSTRUMENTATION ECS LP SYSTEM A1/B1 CHASSIS 35425 TAG INDEX SHEET 3
I-035	118 OF 187		FINAL	3/7/2014	INSTRUMENTATION ECS LP SYSTEM A1/B1 CHASSIS 35425 TAG INDEX SHEET 4
I-036	119 OF 187		FINAL	3/7/2014	INSTRUMENTATION ECS LP SYSTEM A1/B1 CHASSIS 35425 CONTROLS ONE-LINE
I-037	120 OF 187		FINAL	3/7/2014	INSTRUMENTATION ECS LP SYSTEM A1/B1 CHASSIS 35426 DEMOLITION & MODIFICATION SHEET 1
I-038	121 OF 187		FINAL	3/7/2014	INSTRUMENTATION ECS LP SYSTEM A1/B1 CHASSIS 35426 DEMOLITION & MODIFICATION SHEET 2
I-039	122 OF 187		FINAL	3/7/2014	INSTRUMENTATION ECS LP SYSTEM A1/B1 CHASSIS 35426 TAG INDEX SHEET 1
I-040	123 OF 187		FINAL	3/7/2014	INSTRUMENTATION ECS LP SYSTEM A1/B1 CHASSIS 35426 TAG INDEX SHEET 2
I-041	124 OF 187		FINAL	3/7/2014	INSTRUMENTATION ECS LP SYSTEM A1/B1 CHASSIS 35426 TAG INDEX SHEET 3
I-042	125 OF 187		FINAL	3/7/2014	INSTRUMENTATION ECS LP SYSTEM A1/B1 CHASSIS 35426 TAG INDEX SHEET 4
I-043	126 OF 187		FINAL	3/7/2014	INSTRUMENTATION ECS LP SYSTEM A1/B1 CHASSIS 35426 CONTROLS ONE-LINE
I-044	127 OF 187		FINAL	3/7/2014	INSTRUMENTATION ECS LP SYSTEM A1/B1 CHASSIS 35427 DEMOLITION & MODIFICATION SHEET 1
I-045	128 OF 187		FINAL	3/7/2014	INSTRUMENTATION ECS LP SYSTEM A1/B1 CHASSIS 35427 DEMOLITION & MODIFICATION SHEET 2
I-046	129 OF 187		FINAL	3/7/2014	INSTRUMENTATION ECS LP SYSTEM A1/B1 CHASSIS 35427 TAG INDEX SHEET 1
I-047	130 OF 187		FINAL	3/7/2014	INSTRUMENTATION ECS LP SYSTEM A1/B1 CHASSIS 35427 TAG INDEX SHEET 2
I-048	131 OF 187		FINAL	3/7/2014	INSTRUMENTATION ECS LP SYSTEM A1/B1 CHASSIS 35427 TAG INDEX SHEET 3
I-049	132 OF 187		FINAL	3/7/2014	INSTRUMENTATION ECS LP SYSTEM A1/B1 CHASSIS 35427 TAG INDEX SHEET 4
I-050	133 OF 187		FINAL	3/7/2014	INSTRUMENTATION ECS LP SYSTEM A1/B1 CHASSIS 35427 CONTROLS ONE-LINE
I-051	134 OF 187		FINAL	3/7/2014	INSTRUMENTATION ECS LP SYSTEM A1/B1 CHASSIS 35761 DEMOLITION & MODIFICATION SHEET 1
I-052	135 OF 187		FINAL	3/7/2014	INSTRUMENTATION ECS LP SYSTEM A1/B1 CHASSIS 35761 DEMOLITION & MODIFICATION SHEET 2
I-053	136 OF 187		FINAL	3/7/2014	INSTRUMENTATION ECS LP SYSTEM A1/B1 CHASSIS 35761 TAG INDEX SHEET 1
I-054	137 OF 187		FINAL	3/7/2014	INSTRUMENTATION ECS LP SYSTEM A1/B1 CHASSIS 35761 TAG INDEX SHEET 2
I-055	138 OF 187		FINAL	3/7/2014	INSTRUMENTATION ECS LP SYSTEM A1/B1 CHASSIS 35761 TAG INDEX SHEET 3
I-056	139 OF 187		FINAL	3/7/2014	INSTRUMENTATION ECS LP SYSTEM A1/B1 CHASSIS 35761 TAG INDEX SHEET 4
I-057	140 OF 187		FINAL	3/7/2014	INSTRUMENTATION ECS LP SYSTEM A1/B1 CHASSIS 35761 CONTROLS ONE-LINE
I-058	141 OF 187		FINAL	3/7/2014	INSTRUMENTATION 110VAC REGULATED/UNREGULATED DIST. PANEL 37568 GENERAL NOTES
I-059	142 OF 187		FINAL	3/7/2014	INSTRUMENTATION 110VAC REGULATED/UNREGULATED DIST. PANEL 37568 ASSEMBLY
I-060	143 OF 187		FINAL	3/7/2014	INSTRUMENTATION 110VAC REGULATED/UNREGULATED DIST. PANEL 37568 POWER DIST. TABLE
I-061	144 OF 187		FINAL	3/7/2014	INSTRUMENTATION ECS LP REGULATED/UNREGULATED 110VAC CHASSIS 37568 CONTROLS ONE-LINE
I-062	145 OF 187		FINAL	3/7/2014	INSTRUMENTATION ECS LP SYSTEM A1/B1 CHASSIS 37462 TAG INDEX SHEET 1
I-063	146 OF 187		FINAL	3/7/2014	INSTRUMENTATION ECS LP SYSTEM A1/B1 CHASSIS 37462 TAG INDEX SHEET 2
I-064	147 OF 187		FINAL	3/7/2014	INSTRUMENTATION ECS LP SYSTEM A1/B1 CHASSIS 37462 TAG INDEX SHEET 3
I-065	148 OF 187		FINAL	3/7/2014	INSTRUMENTATION ECS LP SYSTEM A1/B1 CHASSIS 37462 TAG INDEX SHEET 4
I-066	149 OF 187		FINAL	3/7/2014	INSTRUMENTATION ECS LP SYSTEM A1/B1 CHASSIS 37462 CONTROLS ONE-LINE
I-067	150 OF 187		FINAL	3/7/2014	INSTRUMENTATION ECS LP SYSTEM A1/B1 CHASSIS 37462 28VDC & CONNECTOR ALLOCATION TABLES
I-068	151 OF 187		FINAL	3/7/2014	INSTRUMENTATION REMOTE I/O PANEL 37462 GENERAL NOTES
I-069	152 OF 187		FINAL	3/7/2014	INSTRUMENTATION REMOTE I/O PANEL 37462 EQUIPMENT LIST
I-070	153 OF 187		FINAL	3/7/2014	INSTRUMENTATION REMOTE I/O PANEL 37462 ENCLOSURE ASSEMBLY
I-071	154 OF 187		FINAL	3/7/2014	INSTRUMENTATION REMOTE I/O PANEL 37462 PANEL ASSEMBLY
I-072	155 OF 187		FINAL	3/7/2014	INSTRUMENTATION REMOTE I/O PANEL 37462 COMPONENT DETAILS SHEET 1
I-073	156 OF 187		FINAL	3/7/2014	INSTRUMENTATION REMOTE I/O PANEL 37462 COMPONENT DETAILS SHEET 2
I-074	157 OF 187		FINAL	3/7/2014	INSTRUMENTATION REMOTE I/O PANEL 37462 TERMINAL BLOCK DETAILS
I-075	158 OF 187		FINAL	3/7/2014	INSTRUMENTATION REMOTE I/O PANEL 37462 CONTROL NET DETAILS
I-076	159 OF 187		FINAL	3/7/2014	INSTRUMENTATION GENERAL 110VAC SINGLE CONTROL VALVE SCHEMATIC
I-077	160 OF 187		FINAL	3/7/2014	INSTRUMENTATION BLOWER MOTOR TYPE 2 CONTROLS SCHEMATIC
I-078	161 OF 187		FINAL	3/7/2014	INSTRUMENTATION GN2 REGULATOR CONTROL SCHEMATIC
I-079	162 OF 187		FINAL	3/7/2014	INSTRUMENTATION 4-20mA REDUNDANT DUAL CONTROL VALVE SCHEMATIC
I-080	163 OF 187		FINAL	3/7/2014	INSTRUMENTATION CHILLERS 1, 2, AND 3 TEMPERATURE COMMAND SCHEMATIC
I-081	164 OF 187		FINAL	3/7/2014	INSTRUMENTATION GENERAL CHILLER INTERFACE CONTROLS SCHEMATIC
I-082	165 OF 187		FINAL	3/7/2014	INSTRUMENTATION GENERAL BOILER INTERFACE CONTROLS SCHEMATIC
I-083	166 OF 187		FINAL	3/7/2014	INSTRUMENTATION GENERAL COOLING TOWER FAN CONTROLS SCHEMATIC
I-084	167 OF 187		FINAL	3/7/2014	INSTRUMENTATION GENERAL PUMP CONTROLS SCHEMATIC
I-085	168 OF 187		FINAL	3/7/2014	INSTRUMENTATION REDUNDANT OVERTEMPERATURE SWITCH SCHEMATIC
I-086	169 OF 187		FINAL	3/7/2014	INSTRUMENTATION GENERAL REDUNDANT TEMPERATURE SIGNAL SCHEMATIC
I-087	170 OF 187		FINAL	3/7/2014	INSTRUMENTATION GENERAL REDUNDANT HUMIDITY SIGNAL SCHEMATIC
I-088	171 OF 187		FINAL	3/7/2014	INSTRUMENTATION 4-20mA REDUNDANT SINGLE CONTROL VALVE SCHEMATIC
I-089	172 OF 187		FINAL	3/7/2014	INSTRUMENTATION 24VDC REDUNDANT DUAL ISOLATION SOLENOID VALVE SCHEMATIC
I-090	173 OF 187		FINAL	3/7/2014	INSTRUMENTATION GENERAL CONTROLS SCHEMATIC
I-091	174 OF 187		FINAL	3/7/2014	INSTRUMENTATION GENERAL CONTACTOR FED HEATER SCR CONTROLS SCHEMATIC
I-092	175 OF 187		FINAL	3/7/2014	INSTRUMENTATION SWITCHGEAR AC POWER MONITOR SCHEMATIC
I-093	176 OF 187		FINAL	3/7/2014	INSTRUMENTATION REMOTE I/O DC POWER DISTRIBUTION SCHEMATIC SHEET 1
I-094	177 OF 187		FINAL	3/7/2014	INSTRUMENTATION REMOTE I/O DC POWER DISTRIBUTION SCHEMATIC SHEET 2
I-095	178 OF 187		FINAL	3/7/2014	INSTRUMENTATION REMOTE I/O 35424 UNREGULATED AC POWER SCHEMATIC
I-096	179 OF 187		FINAL	3/7/2014	INSTRUMENTATION REMOTE I/O 37568 REGULATED AC POWER SCHEMATIC
I-097	180 OF 187		FINAL	3/7/2014	INSTRUMENTATION REDUNDANT PROCESS TRANSDUCER WIRING DETAILS
I-098	181 OF 187		FINAL	3/7/2014	INSTRUMENTATION BLOWER MOTOR CONTROLS SCHEMATIC
I-099	182 OF 187		FINAL	3/7/2014	INSTRUMENTATION GENERAL 24VDC CONTROLLED SINGLE VALVE SCHEMATIC
I-100	183 OF 187		FINAL	3/7/2014	INSTRUMENTATION GENERAL 24VDC CONTROLLED DUAL VALVE SCHEMATIC
I-101	184 OF 187		FINAL	3/7/2014	INSTRUMENTATION GENERAL WIRING AND TERMINATION DETAILS SHEET 2
I-102	185 OF 187		FINAL	3/7/2014	INSTRUMENTATION SEQUENCE OF OPERATIONS SHEET 1
I-103	186 OF 187		FINAL	3/7/2014	INSTRUMENTATION SEQUENCE OF OPERATIONS SHEET 2
I-104	187 OF 187		FINAL	3/7/2014	INSTRUMENTATION SEQUENCE OF OPERATIONS SHEET 3

SYM	ZONE	DESCRIPTION	DATE	APPROVED
REVISIONS				

JACOBS
Jacobs Technology Inc.

SIGNATURES		DATE
DRAWN	MIKE VANHOOSE	3/07/14
CHECKED	MIKE GROTZ	3/07/14
SUBMITTED	RAVI MUTHIAH	3/07/14
ST OF LICENSURE: FL LICENSE NO: 68076		
APPROVED	GLEN WARD	3/07/14
	SCOTT HUNT	3/07/14

NATIONAL AERONAUTICS AND SPACE ADMINISTRATION
JOHN F. KENNEDY SPACE CENTER, NASA
KENNEDY SPACE CENTER, FLORIDA

KSC LAUNCH PAD 39-B
ENVIRONMENTAL CONTROL SYSTEM (ECS) REFURBISHMENT
DRAWING LIST

V-002

FILE NO.	SIZE	DWG.NO.	REV
	F	79K39602	
PCN. NO. 98898		SHEET 2 OF 187	

ASBESTOS CONTAINING MATERIALS (ACM) SCHEDULE

SAMPLE #	MATERIAL TYPE	HOMOGENEOUS LOCATIONS	% /TYPE ASBESTOS	ESTIMATED QUANTITY	UNIT	CONDITION	COMMENT	FRIABLE	NOTES:
DF01	TSI	HEATING CHAMBER IN EXISTING LPAC DUCTING	5%	130	SQ.FT.	GOOD	WHITE SKIN OVER FIBER GLASS	NO	2
DO01	TSI	BLOWER INLET DUCTING	2%	550	SQ.FT.	GOOD	WHITE SKIN AND MASTIC OVER FOAM GLASS	NO	2
TSI 17-13	TSI	HEATER BELL CONE - A6731	NON DETECT (INCLUDED AS ACM WITH TSI 17-14 & 16)	1150	SQ.FT.	GOOD	YELLOW/TAN FOAM WHITE SKIN	YES	1
TSI 17-14	TSI	HEATER BELL CONE A6737	FOAM-85% BLACK MASTIC - 5% CHRYSOTILE	1150 - 12 HEATER CONES (2 CONES PER HEATER)	SQ.FT.	GOOD	YELLOW/TAN FOAM BLACK MASTIC	YES	1
TSI 17-15	TSI	HEATER BELL CONE - A6775	NON DETECT (INCLUDED AS ACM WITH TSI 17-14 & 16)	1150	SQ.FT.	GOOD	YELLOW/TAN FOAM WHITE SKIN	YES	1
TSI 17-16	TSI	HEATER BELL CONE A6723	FOAM-85% BLACK MASTIC - 5% CHRYSOTILE	1150 - 12 HEATER CONES (2 CONES PER HEATER)	SQ.FT.	GOOD	YELLOW/TAN FOAM BLACK MASTIC	YES	1
TSI 18-19	TSI	CHILLER MANIFOLD NORTH	BLACK MASTIC - 5% CHRYSOTILE	39 - (NORTH & SOUTH MANIFOLDS)	LFT.	GOOD	BLACK MASTIC WHITE FOAM WHITE SKIN	YES	1
TSI 18-20	TSI	CHILLER MANIFOLD SOUTH	BLACK MASTIC - 5% CHRYSOTILE	39 - (NORTH & SOUTH MANIFOLDS)	LFT.	GOOD	BLACK MASTIC WHITE FOAM WHITE SKIN	YES	1
TSI 18-21	TSI	NORTH CHILLER BOX	BLACK MASTIC - 5% CHRYSOTILE	1056 - (NORTH & SOUTH CHILLERS & CABIN BOX)	SQ.FT.	GOOD	BLACK MASTIC WHITE FOAM WHITE SKIN	YES	1
TSI 18-22	TSI	CABIN BOX	INSULATION - 80% CHRYSOTILE	1056 - (NORTH & SOUTH CHILLERS & CABIN BOX)	SQ.FT.	GOOD	BLACK MASTIC TAN FOAM WHITE SKIN	YES	1
TSI 18-23	TSI	SOUTH CHILLER BOX	BLACK MASTIC - 5% CHRYSOTILE	1056 - (NORTH & SOUTH CHILLERS & CABIN BOX)	SQ.FT.	GOOD	BLACK MASTIC WHITE FOAM WHITE SKIN	YES	1
TSI 18-30	TSI	CABIN BLOWER PIPE TEE	INSULATION - 80% BLACK MASTIC - 5% CHRYSOTILE	70 (PIPE TEE, STRAIGHT & PIPE ELBOW)	LFT.	GOOD	YELLOW/TAN FOAM BLACK MASTIC	YES	1
TSI 18-31	TSI	CABIN BLOWER STRAIGHT PIPE	BLACK MASTIC - 5% CHRYSOTILE	70 (PIPE TEE, STRAIGHT & PIPE ELBOW)	LFT.	GOOD	BLACK MASTIC	YES	1
TSI 18-32	TSI	CABIN BLOWER PIPE ELBOW	BLACK MASTIC - 5% CHRYSOTILE	70 (PIPE TEE, STRAIGHT & PIPE ELBOW)	LFT.	GOOD	BLACK MASTIC	YES	1
TSI 18-33	TSI	S. TURBO BLOWER PIPE TEE	BLACK MASTIC - 5% CHRYSOTILE	37 (PIPE TEE, STRAIGHT & PIPE ELBOW)	LFT.	GOOD	BLACK MASTIC	YES	1
TSI 18-34	TSI	S. TURBO BLOWER STRAIGHT TEE	BLACK MASTIC - 5% CHRYSOTILE	37 (PIPE TEE, STRAIGHT & PIPE ELBOW)	LFT.	GOOD	BLACK MASTIC	YES	1
TSI 18-35	TSI	S. TURBO BLOWER PIPE ELBOW	BLACK MASTIC - 5% CHRYSOTILE	37 (PIPE TEE, STRAIGHT & PIPE ELBOW)	LFT.	GOOD	BLACK MASTIC	YES	1

NON-ASBESTOS CONTAINING MATERIALS (NON-ACM) SCHEDULE

SAMPLE #	MATERIAL TYPE	HOMOGENEOUS LOCATIONS	% /TYPE ASBESTOS	ESTIMATED QUANTITY	UNIT	CONDITION	COMMENT	FRIABLE	NOTES:
FG 17-7	GASKET	NORTH TURBO FAN	NON DETECT	7	EA.	GOOD	BLACK RUBBER	NO	1
FG 17-8	GASKET	NORTH CENTRIFUGAL BLOWER	NON DETECT	5	EA.	GOOD	BLACK RUBBER	NO	1
FG 17-9	GASKET	SOUTH CENTRIFUGAL BLOWER	NON DETECT	7	EA.	GOOD	BLACK RUBBER	NO	1
MPG 18-26	GASKET	NORTH TUNNEL ORB - AFT	NON DETECT	12	EA.	GOOD	BLACK RUBBER	NO	1
MPG 18-27	GASKET	SOUTH TUNNEL LPAC	NON DETECT	12	EA.	GOOD	BLACK RUBBER	NO	1
PI 17-1	TSI	L PAC 2 - PIPE TEE	NON DETECT	4	LFT.	GOOD	WHITE MASTIC YELLOW FOAM	YES	1
PI 17-2	TSI	L PAC 2 - STRAIGHT PIPE	NON DETECT	90	LFT.	GOOD	WHITE MASTIC YELLOW FOAM	YES	1
PI 17-3	TSI	L PAC 2 - PIPE ELBOW	NON DETECT	6	LFT.	GOOD	WHITE MASTIC YELLOW FOAM	YES	1
PW 17-10	PIPE WRAP	CONDENSATE DRAIN UNDER S. STEAM BOILER - RIGHT	NON DETECT	8	LFT.	GOOD	BLACK MASTIC	NO	1
PW 17-11	PIPE WRAP	CONDENSATE DRAIN UNDER S. STEAM BOILER - CENTER	NON DETECT	8	LFT.	GOOD	BLACK MASTIC	NO	1
PW 17-12	PIPE WRAP	CONDENSATE DRAIN UNDER S. STEAM BOILER - LEFT	NON DETECT	8	LFT.	GOOD	BLACK MASTIC	NO	1
TSI 17-17	TSI	STRAIGHT PIPE - A67262	NON DETECT	1150	SQ.FT.	GOOD	YELLOW/TAN FOAM WHITE SKIN	YES	1
TSI 17-18	TSI	STRAIGHT PIPE	NON DETECT				WHITE SKIN/BLACK MASTIC/YELLOW FOAM		1
TSI 18-28	TSI	NORTH TUNNEL PLB	NON DETECT	4	SQ.FT.	GOOD	WHITE FOAM WHITE SKIN	YES	1
TSI 18-29	TSI	SOUTH TUNNEL LPAC	NON DETECT	4	SQ.FT.	GOOD	WHITE FOAM WHITE SKIN	YES	1
VD 17-4	VIBRATION SEAL	NORTH TURBO FAN	NON DETECT	10	EA.	GOOD	RED RUBBER MEMBRANE	NO	1
VD 17-5	VIBRATION SEAL	NORTH CENTRIFUGAL BLOWER	NON DETECT	10	EA.	GOOD	RED RUBBER MEMBRANE	NO	1
VD 17-6	VIBRATION SEAL	SOUTH TURBO FAN	NON DETECT	10	EA.	GOOD	RED RUBBER MEMBRANE	NO	1
WG 18-24	GASKET	SOUTH CHILLER WINDOW	NON DETECT	1	EA.	GOOD	BLACK RUBBER	NO	1
WG 18-25	GASKET	NORTH CHILLER WINDOW	NON DETECT	4	EA.	GOOD	BLACK RUBBER	NO	1

RCRA 8 METALS SCHEDULE

SAMPLE #	SAMPLE LOCATION	COLOR/TYPE	REPORTED VALUES (mg/kg WET)								
			HG	AS	BA	CD	CR	PB	SE	AG	NOTES
1017-2	COOLING TOWER CONDENSATE PIPING AND PUMPS	DARK GRAY PAINT	NOT DETECTED	NOT DETECTED	1610	1.18	2.8	44	NOT DETECTED	NOT DETECTED	1
1017-4	COOLING TOWER CONDENSATE PIPING	LIGHT GRAY PAINT	0.009290	NOT DETECTED	13200	NOT DETECTED	16.5	406	NOT DETECTED	NOT DETECTED	1
1018-6	SCREW COMPRESSOR AND CABINETS	WHITE PAINT	NOT DETECTED	NOT DETECTED	13900	NOT DETECTED	3.03	NOT DETECTED	NOT DETECTED	NOT DETECTED	1
1018-8	GLYCOL PUMP MOTOR	GRAY/GREEN	1.63	NOT DETECTED	494	10.8	2900	4670	NOT DETECTED	NOT DETECTED	1
1018-10	SCREW COMPRESSOR PIPING AND SUPPORT BEAMS	WHITE	0.0464	NOT DETECTED	13400	1.27	NOT DETECTED	NOT DETECTED	NOT DETECTED	NOT DETECTED	1
1018-12	TURBO PUMP AND BLOWERS	GRAY	2.73	NOT DETECTED	32	6.03	293	2700	NOT DETECTED	NOT DETECTED	1
1018-14	SOUTH BOILER	GREEN	NOT DETECTED	NOT DETECTED	20	4.49	2750	15400	NOT DETECTED	NOT DETECTED	1

PCB SCHEDULE

SAMPLE NUMBER	SAMPLE LOCATION	COLOR TYPE	PCB's TOTAL AROCLORS (PPM)	NOTES
1017-1	COOLING TOWER CONDENSATE PIPING AND PUMPS	DARK GRAY PAINT	NOT DETECTED	1
1017-3	COOLING TOWER CONDENSATE PIPING	LIGHT GRAY PAINT	NOT DETECTED	1
1018-5	SCREW COMPRESSOR AND CABINETS	WHITE PAINT	NOT DETECTED	1
1018-7	GLYCOL PUMP MOTOR	GRAY-GREEN	2500	1
1018-9	SCREW COMPRESSOR PIPING AND SUPPORT BEAMS	WHITE	2.0	1
1018-11	TURBO PUMP & BLOWERS	GRAY	19.0	1
1018-13	SOUTH BOILER	GREEN	5.5	1
TB18-1	TURBO BLOWER A6895	BULK OIL SAMPLE	NOT DETECTED	1

NOTES:

1. INFORMATION IS TAKEN FROM "REPORT - HAZARDOUS MATERIALS & CONTROLLED WASTE" BY APPLIED ENVIRONMENTAL HEALTH & SAFETY, NOV 28, 2011.
2. INFORMATION IS TAKEN FROM THE NASA AMIS REPORT, "HOMOGENEOUS MATERIALS SUMMARY - ASBESTOS." MATERIALS IDENTIFIED AS ASBESTOS CONTAINING MATERIALS (ACM) ARE LABELED WITH A WARNING LABEL. CONTRACTOR SHALL ASSUME THAT ALL OTHER MATERIAL THAT IS SIMILAR IN APPEARANCE IS ALSO ACM UNLESS OTHERWISE STATED.
3. SEE M-048 FOR THE LOCATIONS OF THE HAZ MAT SAMPLES SHOWN IN THIS SCHEDULE.
4. SEE E-001 FOR HANDLING OF WIRING AND ELECTRIC MATERIALS.
5. THE CONTRACTOR SHALL ABATE ALL ACM IDENTIFIED ON THIS DRAWING.
6. ALL HAZARDOUS MATERIALS SHALL BE DISPOSED OF IN ACCORDANCE WITH THE SPECIFICATIONS AND STATE REGULATIONS.
7. PROTECT WORKERS FROM EXPOSURE TO THESE MATERIALS IN ACCORDANCE WITH THE SPECIFICATIONS AND STATE REGULATIONS.
8. MATERIALS IDENTIFIED AS HAZARDOUS SHALL BE TREATED AS HAZARDOUS REGARDLESS OF FUTURE TESTING RESULTS.

SYM	ZONE	DESCRIPTION	DATE	APPROVED
		REVISIONS		

JACOBS
Jacobs Technology Inc.

SIGNATURES		DATE
DRAWN	MIKE VANHOOSE	3/07/14
CHECKED	GLEN WARD	3/07/14
SUBMITTED	RAVI MUTHIAH	3/07/14
ST OF LICENSURE: FL LICENSE NO: 68076		
APPROVED	GLEN WARD	3/07/14
	SCOTT HUNT	3/07/14

NATIONAL AERONAUTICS AND SPACE ADMINISTRATION
JOHN F. KENNEDY SPACE CENTER, NASA
KENNEDY SPACE CENTER, FLORIDA

KSC LAUNCH PAD 39-B
ENVIRONMENTAL CONTROL SYSTEM (ECS) REFURBISHMENT
MECHANICAL INSTALLATION
HAZARDOUS MATERIALS SCHEDULE

V-003

FILE NO.	SIZE	DWG.NO.	REV
	F	79K39602	
PCN. NO. 98898		SHEET 3 OF 187	

NOTES:

1. SEE M-047 FOR SCHEDULE OF HAZARDOUS MATERIALS FOUND ON THIS DRAWING.
2. MATERIALS IDENTIFIED AS ASBESTOS CONTAINING MATERIALS (ACM) MAY OR MAY NOT BE LABELED WITH A WARNING LABEL.
3. CONTRACTOR SHALL ASSUME THAT ALL OTHER MATERIAL OF SIMILAR APPEARANCE TO IDENTIFIED ACM IS ALSO ACM UNLESS OTHERWISE STATED.
4. OTHER MATERIALS THAT ARE IDENTIFIED AS HAZARDOUS BY WARNING LABELS SHALL BE TREATED AS HAZARDOUS EVEN IF NOT IDENTIFIED ON THIS DRAWING.
5. THE CONTRACTOR SHALL ABATE ALL ACM IDENTIFIED ON THIS DRAWING.
6. ALL HAZARDOUS MATERIALS SHALL BE DISPOSED OF IN ACCORDANCE WITH THE SPECIFICATIONS AND STATE REGULATIONS.
7. PROTECT WORKERS FROM EXPOSURE TO THESE MATERIALS IN ACCORDANCE WITH THE SPECIFICATIONS AND STATE REGULATIONS.
8. MATERIALS IDENTIFIED AS HAZARDOUS SHALL BE TREATED AS HAZARDOUS REGARDLESS OF FUTURE TESTING RESULTS.
9. SEE NASA AMIS REPORT FOR MORE INFORMATION REGARDING THE HAZARDOUS MATERIALS IN THE ECS FACILITY.

PCB Sample 1017-1 Dark Gray Paint Cooling Tower Condensate Pumps & Piping

RCRA 8 Metals Sample 1017-2 Dark Gray Paint Cooling Tower Condensate Pumps & Piping

PCB Sample 1017-3 Light Gray Paint Cooling Tower Condensate Piping

RCRA 8 Metals Sample 1017-4 Light Gray Paint Cooling Tower Condensate Piping

POSITIVE FOR BARIUM AND LEAD

PCB Sample 1018-5 White Paint Screw Compressor and Cabinets

POSITIVE FOR BARIUM

RCRA 8 Metals Sample 1018-6 White Paint Screw Compressor and Cabinets

POSITIVE FOR CHROMIUM AND LEAD

RCRA 8 Metals Sample 1018-8 Gray-green paint Glycol pump motor

POSITIVE FOR PCB's

PCB Sample 1018-7 Gray-green paint Glycol pump motor

POSITIVE FOR BARIUM

RCRA 8 Metals Sample 1018-10 White Paint Piping and Supports

PCB Sample 1018-9 White Paint Piping and Supports

ACM SAMPLE DO01

NON ACM SAMPLE VD 17-4

NON ACM SAMPLE FG 17-7

NON ACM SAMPLE TSI 17-18

ACM SAMPLE TSI 18-19

ACM SAMPLE TSI 17-15

NON ACM SAMPLE MPG 18-26

ACM SAMPLE TSI 17-14

NON ACM SAMPLE MPG 18-27

NON ACM SAMPLE TSI 18-28

ACM SAMPLE DO01

ACM SAMPLE TSI 18-31

ACM SAMPLE TSI 18-21

ACM SAMPLE TSI 18-22

NON ACM SAMPLE WG 18-25

ACM SAMPLE TSI 17-13

ACM SAMPLE TSI 18-23

ACM SAMPLE TSI 18-35

ACM SAMPLE TSI 18-32

ACM SAMPLE TSI 18-30

POSITIVE FOR CHROMIUM AND LEAD

RCRA 8 Metals Sample 1018-14 Green Paint South Boiler

NON ACM SAMPLES PW 17-10 PW 17-11 PW 17-12 (Boiler below)

PCB Bulk Oil Sample TB18-1 Turbo Blower A6895

PCB Sample 1018-13 Green Paint South Boiler

ACM SAMPLE TSI 17-16

NON ACM SAMPLE TSI 17-17

NON ACM SAMPLE TSI 18-29

ACM SAMPLE TSI 18-34

NON ACM SAMPLE MPG 18-27

PCB Sample 1018-11 Gray Paint Turbo Blowers and Motor

ACM SAMPLE TSI-18-33

ACM SAMPLE TSI 18-20

NON ACM SAMPLE WG 18-24

RCRA 8 Metals Sample 1018-12 Gray Paint Turbo Blowers and Motor

POSITIVE FOR CHROMIUM AND LEAD

NON ACM SAMPLE VD 17-5

NON ACM SAMPLE FG 17-8

ACM SAMPLE DF01

NON ACM SAMPLE VD 17-6

NON ACM SAMPLE FG 17-9

NON ACM SAMPLE PI 17-1

NON ACM SAMPLE PI 17-2

NON ACM SAMPLE PI 17-3

SWITCH GEAR

35434

35433

35799

35435

MCC A/B

35436

35427 (ECS) (REF)

35423 (ECS) (REF)

SCR'S

35437

35438

35439

35440

ECS CONTROL ROOM

35801 (KGCS) (REF)

OE-TM CONSOLE SHELL ASSY 37705-100 (REF)

35800 (KGCS) (REF)

34630 (KGCS/ECS) (REF)

34609 (GSP) (REF)

105B

104

KEY

ACM	ASBESTOS CONTAINING MATERIAL
NON-ACM	NON-ASBESTOS CONTAINING MATERIAL
	ACM IDENTIFIED BY EXISTING LABEL AND DESCRIBED IN THE AMIS REPORT
	SUSPECT ACM BASED ON APPEARANCE SIMILAR TO POSITIVELY IDENTIFIED ACM
	ACM IDENTIFIED DURING APPLIED ENVIRONMENTAL, HEALTH & SAFETY SURVEY IN 2011.
	INDICATES HAZARDOUS MATERIAL. FOUND

SYM	ZONE	DESCRIPTION	DATE	APPROVED
REVISIONS				

JACOBS
Jacobs Technology Inc.

SIGNATURES		DATE
DRAWN	MIKE VANHOOSE	3/07/14
CHECKED	GLEN WARD	3/07/14
SUBMITTED	RAVI MUTHIAH	3/07/14
ST OF LICENSURE: FL LICENSE NO: 68076		
APPROVED	GLEN WARD	3/07/14
	SCOTT HUNT	3/07/14

NATIONAL AERONAUTICS AND SPACE ADMINISTRATION
JOHN F. KENNEDY SPACE CENTER, NASA
KENNEDY SPACE CENTER, FLORIDA

KSC LAUNCH PAD 39-B
ENVIRONMENTAL CONTROL SYSTEM (ECS) REFURBISHMENT
MECHANICAL INSTALLATION
HAZARDOUS MATERIALS LOCATIONS

FILE NO.	SIZE	DWG.NO.	REV
	F	79K39602	
PCN. NO. 98898		SHEET 4 OF 187	

V-004

FLUID POWER SYMBOLS

VALVE, FLOW CONTROL VALVE, PNEUMATICALLY OPERATED. NORMALLY OPEN

VALVE, HAND. NORMALLY CLOSED MONODIRECTIONAL

VALVE, HAND. NORMALLY OPEN MONODIRECTIONAL

VALVE, HAND. NORMALLY OPEN BIDIRECTIONAL

VALVE, HAND. NORMALLY CLOSED BIDIRECTIONAL

VALVE, FLOW CONTROL VALVE, MOTOR OPERATED WITH MANUAL OVERRIDE

VALVE, FLOW CONTROL VALVE, HAND. NORMALLY OPEN

VALVE, FLOW CONTROL VALVE, HUMIDITY, NORMALLY OPEN

VALVE, FLOW CONTROL VALVE, MOTOR OPERATED WITH MANUAL OVERRIDE AND TWO POSITION SWITCHES

VALVE, MOTOR OPERATED WITH MANUAL OVERRIDE AND TWO POSITION SWITCHES

VALVE, SOLENOID. NORMALLY CLOSED MONODIRECTIONAL

VALVE, SOLENOID. NORMALLY OPEN MONODIRECTIONAL

VALVE, FLOAT

VALVE, THERMALLY CONTROLLED THREE-WAY WITH POSITION SWITCH

VALVE, RELIEF PRESSURE MANUAL ADJUSTMENT

TRANSDUCER/TRANSMITTER HUMIDITY

TRANSDUCER/TRANSMITTER TEMPERATURE

TRANSDUCER/TRANSMITTER PRESSURE

TRANSDUCER/TRANSMITTER TEMPERATURE AND HUMIDITY

PUMP. LIQUID. FIXED DISPLACEMENT. UNIDIRECTIONAL

FLOW DIRECTION, LIQUID

FLOW DIRECTION, AIR/GN2

REDUCER

PIPE/DUCT CAP

PRESS/TEMP WELL

FLANGE CONNECTION

UNION

QUICK DISCONNECT COUPLING

HUMIDIFIER SPRAY BAR

FILTER-STRAINER

FILTER-STRAINER WYE

STEAM TRAP

CHECK VALVE

BLOCK & BLEED VALVE

SWITCH, PRESSURE

SWITCH TEMPERATURE

HEAT EXCHANGER

COMPRESSOR/BLOWER

ELECTRIC HEATER

CIRCUIT SETTER

FLEXIBLE CONNECTOR

UNION ORIFICE

PRESSURE GAUGE

TEMPERATURE GAUGE

FLOWMETER

LIQUID LEVEL/SIGHT GLASS

SILENCER

UNIVERSAL VENTURI

DISCRETE DEVICES

BACKFLOW PREVENTER

NEW CONNECTION (INTERFACE)

ORIFICE PLATE

MANUAL AIR VENT

AUTOMATIC AIR VENT

RESERVOIR TANK

-X- DWG NO. STREAM ENTERING OR LEAVING SHEET

A,B,C,ETC. MOTOR

MOTORIZED FAN

M MOTOR

PUMP AND RESERVOIR

DEVICE IDENTIFIERS

IDENTIFIER	DESCRIPTION
ACC	ACCUMULATOR
BBV	BLOCK & BLEED VALVE
BFP	BACKFLOW PREVENTER
C	COMPRESSOR
CH	CHILLER
CND	CONDENSOR
CV	CHECK VALVE
CT	COOLING TOWER
CTF	COOLING TOWER FAN
D	DRYER
DPE	DIFFERENTIAL PRESSURE ELEMENT
DPS	DIFFERENTIAL PRESSURE SWITCH
DPT	DIFFERENTIAL PRESSURE TRANSMITTER
EJ	EXPANSION JOINT
FC	FAIL CLOSED
FCV	FLOW CONTROL VALVE
FE	FLOW ELEMENT
FH	FLEX HOSE
FIC	FLOW INDICATING CONTROLLER
FIL	FILTER
FM	FLOW METER
FO	FAIL OPEN
FRL	FILTER, REGULATOR, LUBRICATOR
FS	FLOW SWITCH
FST	FLOW STRAIGHTENER
FT	FLOW TRANSMITTER
FV	FLOAT OPERATED VALVE
FYC	FLOW CONTROLLER
GV	GAS OPERATED VALVE
H	HEATER
HLA	HIGH LEVEL ALARM
HX	HEAT EXCHANGER
HUM	HUMIDIFIER
I/P	CURRENT TO PRESSURE CONVERTER
LS	LEVEL SWITCH
LB	ICPS BLOWER
LRB	ICPS REDUNDANT BLOWER
JT	POWER TRANSMITTER
LCV	LEVEL CONTROL VALVE
LLA	LOW LEVEL ALARM
ME	MOISTURE ELEMENT
MOV	MOTORIZED VALVE
MT	MOISTURE TRANSMITTER
NB	NORTH BLOWER
NBO	NORTH BOILER
NC	NORMALLY CLOSED
NO	NORMALLY OPEN
OC	OIL COOLER
OP	ORIFICE PLATE
OTS	OVER TEMPERATURE SWITCH
P	PUMP
P&ID	PIPING AND INSTRUMENTATION DIAGRAM
PC	PRESSURE CONTROLLER
PCV	PRESSURE CONTROL VALVE
PDG	DIFFERENTIAL PRESSURE GAUGE
PE	PRESSURE ELEMENTS
PG	PRESSURE GAUGE

IDENTIFIER	DESCRIPTION
PI	PRESSURE INDICATOR
PIC	PRESSURE INDICATOR/CONTROLLER
PRV	PRESSURE REGULATING VALVE
PS	PRESSURE SWITCH
PIT	PRESSURE INDICATING TRANSMITTER
PT	PRESSURE TRANSMITTER
PWR	POWER SUPPLY
PY	PRESSURE CTRL I/P
QD	QUICK DISCONNECT
RB	REDUNDANT BLOWER
RD	RUPTURE DISC
ROV	REMOTELY OPERATED VALVE
RV	RELIEF VALVE
SB	SOUTH BLOWER
SBO	SOUTH BOILER
SEP	SEPARATOR
SG	SIGHT GAUGE
SL	SILENCER
SN	SPRAY NOZZLE
SOV	SOLENOID OPERATED VALVE
SP	SPRINKLER
SPV	SURGE PREVENTION VALVE
SSV	SAFETY SHUT-OFF VALVE
ST	STRAINER
SV	SERVO VALVE
SVK	SERVO AMPLIFIER
T	TANK
TC	TEMPERATURE CONTROLLER
TCV	TEMPERATURE CONTROL VALVE
TDV	TRIPLE DUTY VALVE
TE	TEMPERATURE ELEMENT
TG	TEMPERATURE GAUGE
TIC	TEMP. INDICATOR/CONTROLLER
TIT	TEMPERATURE INDICATING TRANSMITTER
TP	TRAP
TS	TEMPERATURE SWITCH
TT	TEMPERATURE TRANSMITTER
V	VALVE (HAND OPERATED)
VBR	VACUUM BREAKER
VE	VIBRATION ELEMENT
VFD	VARIABLE FREQUENCY DRIVE
VIA	VIBRATION MONITOR
VT	VIBRATION TRANSMITTER
VM	VENTURI FLOW METER
WIC	TORQUE INDICATOR/CONTROLLER
XLH	COMPRESSOR ON INDICATING LIGHT
XLL	COMPRESSOR OFF INDICATING LIGHT
YK	PROGRAMMABLE CONTROLLER REMOTE I/O
ZE	POSITION ELEMENT
ZIT	POSITION INDICATING TRANSMITTER
ZLH	POSITION OPEN INDICATING LIGHT
ZLL	POSITION CLOSED INDICATING LIGHT
ZS	POSITION SWITCH
ZSO	POSITION LIMIT SWITCH, FULL OPEN
ZSC	POSITION LIMIT SWITCH, FULL CLOSE

ABBREVIATIONS

AA	AUTOMATIC AIR VENT
AC	AIR CONDITIONER
AD	ACCESS DOOR
AI	ABANDONED IN PLACE
AFF	ABOVE FINISHED FLOOR
AHU	AIR HANDLING UNIT
AL	ALUMINUM
ALD	AUTOMATIC LOUVER DAMPER
AP	AUXILIARY POWER UNIT
APROX	APROXIMATE(LY)
APS	AFT PROPULSION SYSTEM
ASD	ADJUSTABLE SPEED DRIVE
BTU	BRITISH THERMAL UNIT PER HOUR
BLDG	BUILDING
BOD	BOTTOM OF DUCT
BOP	BOTTOM OF PIPE
CONC	CONCRETE
COND	CONDENSATE
CAP	CAPACITY
CONN	CONNECTION
CH	CHILLER
CP	CHLORINATED POLYVINYL CHLORIDE
CWS	CONDENSER WATER SUPPLY
CWR	CONDENSER WATER RETURN
CFM	CUBIC FEET PER MINUTE
CD	CEILING DIFFUSER
CR	CEILING REGISTER
CS/AFT	CORE STAGE AFT
CS/ENG	CORE STAGE ENGINE SECTION
CS/FS	CORE STAGE FORWARD SKIRT
CS/IT	CORE STAGE INTER-TANK
CT	COOLING TOWER
D	DRAIN
DIA	DIAMETER
DDC	DIRECT DIGITAL CONTROL
DB	DRY BULB
DN	DOWN
DO	DAMPER OPERATION
EC/CC	ENVIRONMENTAL CHAMBER/CREW CABIN
ECS	ENVIRONMENTAL CONTROL SYSTEM
ECLSS	ENVIRONMENTAL CONTROL & LIFE SUPPORT SYSTEM
EDH	ELECTRIC DUCT HEATER
EF	EXHAUST FAN
EXST	EXISTING
EVAP	EVAPORATOR
EA	EACH
ENT	ENTERING
EWT	ENTERING WATER TEMPERATURE
E/P	ELECTRO-PNEUMATIC
EDH	ELECTRIC DUCT HEATER
EL	ELEVATION
EQPT	EQUIPMENT
EWC	ELECTRIC WATER COOLER
EF	EXHAUST FAN
EXH	EXHAUST
FCU	FAN COOLING UNIT
FPM	FEET PER MINUTE
FT	FEET
FACP	FIRE ALARM CONTROL PANEL
FIN	FINISHED
FA	FRESH AIR
FCU	FAN COOLING UNIT
FC	FAN COIL
FD	FIRE DAMPER
FM	FLOW METER
FL	FLOOR
FSS	FIXED SERVICE STRUCTURE
GALV	GALVANIZED
GAL	GALLON(S)
GPM	GALLONS PER MINUTE
HT	HEIGHT
HP	HORSEPOWER
HORIZ	HORIZONTAL
HTR	HEATER
HVT	HIGH VELOCITY TERMINAL
ICPS	INTERIM CRYOGENIC PROPULSION STAGE
LAS	LAUNCH ABORT SYSTEM
LPAC	LOCALIZE PAYLOAD AIR CONDITIONING
ML	MOBILE LAUNCHER
REF	REFERENCE
S	STEAM
SM	SERVICE MODULE
SP	STATIC PRESSURE
VCD	VOLUME CONTROL DAMPER
W	WATER
WGR	WATER GLYCOL RETURN
WGS	WATER GLYCOL SUPPLY

PIPING SYMBOLS

THERMOMETER

PRESSURE GAUGE

BUTTERFLY VALVE/BALANCING VALVE (CIRCUIT SETTER)

STRAINER W/ BLEED

CHECK VALVE

BALL VALVE

GATE VALVE

TEMPERATURE CONTROL VALVE – 3 WAY

SPRAY VALVE

MOTORIZED VALVE

PRESSURE REDUCING VALVE

LINE TYPES

- PROCESS LINE
- MECHANICAL LINK
- HYDRAULIC LINE
- INSTRUMENT LINE ELECTRICAL SIGNAL
- COMMUNICATION OR DATA LINK
- EQUIPMENT BOUNDARIES
- EXISTING LINES AND EQUIPMENT
- PNEUMATIC LINE
- A — COMPRESSED AIR
- D — CONDENSATE DRAIN
- CWR — CONDENSER WATER RETURN
- CWS — CONDENSER WATER SUPPLY
- WGR — WATER GLYCOL RETURN
- WGS — WATER GLYCOL SUPPLY
- W — DOMESTIC COLD WATER
- S — STEAM
- SW — SAFE WASTE

NOTES:

1. ALL SYMBOLS & IDENTIFIERS SHOWN ON THIS SHEET MAY OR MAY NOT BE USED IN THIS DRAWING PACKAGE.

SYM	ZONE	DESCRIPTION	DATE	APPROVED
REVISIONS				

JACOBS™ Jacobs Technology Inc.

NATIONAL AERONAUTICS AND SPACE ADMINISTRATION
JOHN F. KENNEDY SPACE CENTER, NASA
KENNEDY SPACE CENTER, FLORIDA

KSC LAUNCH PAD 39-B
ENVIRONMENTAL CONTROL SYSTEM (ECS) REFURBISHMENT

MECHANICAL SYMBOLS & ABBREVIATIONS

SIGNATURES		DATE
DRAWN	MIKE VANHOOSE	3/07/14
CHECKED	HANNAH LYNCH	3/07/14
SUBMITTED	RAVI MUTHIAH	3/07/14
ST OF LICENSURE: FL LICENSE NO: 68076		
APPROVED	GLEN WARD	3/07/14
	DREW GILLESPIE	3/07/14

M-001

FILE NO. | SIZE F | DWG.NO. 79K39602 | REV

PCN. NO. 98898 | SHEET 5 OF 187

P:\GS452\DRAWINGS\PROC\M-001.DWG

06-FEB-2014 21:54

RELEASE

GENERAL NOTES:

1. DEMOLITION DRAWINGS ARE INTENDED TO GRAPHICALLY REPRESENT THE MAJOR TASKS TO BE PERFORMED. MINOR ELEMENTS OF THE WORK SUCH AS SUPPORTS, HANGERS, SMALL DIAMETER PIPING, CONTROLS CONDUITS, TUBING AND SMALLER RELATED WORK WITHIN AREAS TO BE DEMOLISHED MAY NOT BE INDICATED, BUT SHALL BE REMOVED OR CAPPED WITH MATERIALS AND JOINING METHODS TO MATCH THE EXISTING AS DIRECTED BY THE CONTRACTING OFFICER.

2. DRAWINGS DO NOT INDICATE ALL ITEMS PRESENT IN EACH SPACE.

3. EXISTING PIPE SIZES AND LOCATIONS SHOWN ARE APPROXIMATE AND SHALL BE CONFIRMED BY THE CONTRACTOR PRIOR TO FABRICATION OF NEW WORK.

4. THESE DRAWINGS SHOW THE GENERAL ARRANGEMENT OF PIPING AND EQUIPMENT ONLY AND ARE NOT SUITABLE FOR FABRICATION AND DO NOT INDICATE EVERY OFFSET, BEND, FITTING OR MODIFICATION OF PIPING REQUIRED FOR INSTALLATION, AND TO MAINTAIN THE MANUFACTURERS RECOMMENDED CLEARANCES.

5. THE CONTRACTOR SHALL PREPARE SHOP DRAWINGS INDICATING THE PROPOSED INSTALLATION ROUTING AND SUPPORT DETAILS WITH DISTANCES FROM FIXED STRUCTURAL ELEMENTS SUCH AS BEAMS, COLUMNS AND ELEVATIONS NOTED TO CLEARLY DEMONSTRATE CONTRACTOR COORDINATION WITH EXISTING FIELD CONDITIONS, PER SPECIFICATIONS.

6. DURING THE PRE-BID WALK-DOWN, THE CONTRACTOR SHALL CAREFULLY EXAMINE THE AREAS AND EXISTING CONDITIONS ASSOCIATED WITH THE WORK TO BE PERFORMED TO THOROUGHLY FAMILIARIZE HIMSELF OR HERSELF WITH EXISTING FILED CONDITIONS AND DIFFICULTIES THAT AFFECT EXECUTION OF THE WORK, AS WELL AS TO IDENTIFY SYSTEMS AND EQUIPMENT WITH ARE TO REMAIN IN PLACE AND MUST BE PROTECTED FROM HIS OR HER ACTIVITIES.

7. WHERE SECTIONS OF PIPING ARE BEING REMOVED FOR REWORK THE CONTRACTOR SHALL PROVIDE TEMPORARY BRACING/HANGERS FOR PIPING WHICH IS TO REMAIN. WHERE PIPING IS BEING DEMOLISHED, THE EXISTING PIPING WHICH IS TO REMAIN SHALL BE SUPPORTED.

8. TYPICAL SUPPORT DETAILS ARE SHOWN ON THE CONTRACT DRAWINGS. THE CONTRACTOR SHALL COORDINATE EXACT CONFIGURATION, QUANTITY, AND DIMENSIONS WITH THE ACTUAL ROUTING AND EQUIPMENT FURNISHED.

9. PROVIDE MANUAL AIR VENTS AT PIPING SYSTEM HIGH POINTS, AND MANUAL AIR VENTS AND DRAINS IN SECTIONS OF PIPING WHICH MAY BE ISOLATED TO FACILITATE TESTING, DRAINING AND REFILLING THE PIPING SYSTEM.

10. THE EXACT EQUIPMENT SIZE, CONFIGURATION, MAINTENANCE SERVICE AREAS, PIPING, AND ELECTRICAL CONNECTIONS VARY BY MANUFACTURER. THE COORDINATION OF WHICH SHALL BE EXCLUSIVE RESPONSIBILITY OF THE CONTRACTOR.

11. THE LAYOUT SHOWN ON THE DRAWINGS IS BASED UPON THE REQUIREMENTS OF A PARTICULAR MANUFACTURER AS SELECTED AS THE BASIS OF DESIGN. THE CONTRACTOR SHALL SUBMIT COORDINATION DRAWN INDICATING THE ACTUAL SIZE AND CONFIGURATION OF PROPOSED EQUIPMENT DRAWING TO SCALE INCLUDING THE MANUFACTURER'S RECOMMENDED MAINTENANCE SERVICE AREAS AND MECHANICAL AND ELECTRICAL INTERFACE REQUIREMENTS INCLUDING PIPING AND ELECTRICAL CONNECTIONS AT THE TIME OF EQUIPMENT SHOP DRAWN SUBMITTAL.

12. THE CONTRACTOR SHALL PROVIDE ALL NECESSARY COORDINATION BETWEEN ALL INVOLVED TRADES AND PARTICIPATE IN SYSTEM COMMISSIONING.

13. WHERE INSULATED PIPING IS INDICATED TO REMAIN AND BE RECONNECTED, THE INSULATION/JACKETING ON THE WORK TO REMAIN SHALL BE REMOVED BACK TO THE FIRST FULL SECTION (JOINT) NOT OTHERWISE DISTURBED BY THE DEMOLITION AND BE REPLACED. NEW INSULATION TYPE, AND THICKNESS SHALL MATCH EXISTING.

14. RE-USE EXISTING PENETRATIONS TO THE MAXIMUM EXTENT POSSIBLE.

15. INSTALL ALL WORK SO THAT PARTS REQUIRING PERIODIC INSPECTION, OPERATION, MAINTENANCE, AND REPAIR ARE READILY ACCESSIBLE. INSTALL CONCEALED VALVES, EXPANSION JOINTS, CONTROLS, DAMPERS, AND EQUIPMENT REQUIRING ACCESS, IN LOCATIONS FREELY ACCESSIBLE THROUGH ACCESS DOORS.

16. ALL NEW WORK SHALL BE INSTALLED NEATLY AND WITH A CLEAN APPEARANCE. UNLESS OTHERWISE SHOWN, PIPING SHALL BE ROUTED HORIZONTALLY OR VERTICALLY. ENSURE CAULKING AND OTHER FILLER MATERIALS ARE APPLIED WITH A NEAT APPEARANCE. CAULKING ADDED TO SEAMS SHALL BE APPLIED IN SUFFICIENT QUANTITIES THAT IT IS VISIBLE FOR INSPECTION. SHARP EDGES SHALL BE STRAIGHT AND DE-BURRED.

17. FURNISH DUCTWORK, PIPING OFFSETS, FITTINGS, AND ACCESSORIES AS REQUIRED TO PROVIDE A COMPLETE INSTALLATION. COORDINATE THE WORK OF THE DIFFERENT TRADES TO AVOID INTERFERENCE BETWEEN PIPING, EQUIPMENT, STRUCTURAL, AND ELECTRICAL WORK. PROVIDE COMPLETE, IN PLACE, ALL NECESSARY OFFSETS IN PIPING AND DUCTWORK, AND ALL FITTINGS, AND OTHER COMPONENTS, REQUIRED TO INSTALL THE WORK AS INDICATED AND SPECIFIED.

18. DO NOT USE ASBESTOS AND ASBESTOS-CONTAINING PRODUCTS.

19. FULLY ENCLOSE OR GUARD BELTS, PULLEYS, CHAINS, GEARS, COUPLINGS, PROJECTING SETSCREWS, KEYS, AND OTHER ROTATING PARTS EXPOSED TO PERSONNEL CONTACT ACCORDING TO OSHA REQUIREMENTS. PROPERLY GUARD OR COVER WITH INSULATION OF A TYPE SPECIFIED, HIGH TEMPERATURE EQUIPMENT AND PIPING EXPOSED TO CONTACT BY PERSONNEL OR WHERE IT CREATES A POTENTIAL FIRE HAZARD.

20. PROVIDE ANCHOR BOLTS FOR EQUIPMENT PLACED ON CONCRETE EQUIPMENT PADS OR ON CONCRETE SLABS. BOLTS TO BE OF THE SIZE AND NUMBER RECOMMENDED BY THE EQUIPMENT MANUFACTURER AND LOCATED BY MEANS OF SUITABLE TEMPLATES. INSTALLATION OF ANCHOR BOLTS SHALL NOT DEGRADE THE SURROUNDING CONCRETE. ANCHOR EQUIPMENT IN ACCORDANCE WITH APPLICABLE SEISMIC CRITERIA FOR THE AREA AND AS DEFINED IN SMACNA 1981.

21. INSTALL MATERIALS AND EQUIPMENT IN ACCORDANCE WITH THE REQUIREMENTS OF THE CONTRACT DRAWINGS AND APPROVED MANUFACTURER'S INSTALLATION INSTRUCTIONS. ACCOMPLISH INSTALLATION BY WORKERS SKILLED IN THIS TYPE OF WORK. PERFORM INSTALLATION SO THAT THERE IS NO DEGRADATION OF THE DESIGNED FIRE RATINGS OF WALLS, PARTITIONS, CEILINGS, AND FLOORS.

22. INSTALL WORK IN SUCH A MANNER AND AT SUCH TIME THAT A MINIMUM OF CUTTING AND PATCHING OF THE BUILDING STRUCTURE IS REQUIRED. MAKE HOLES IN EXPOSED LOCATIONS, IN OR THROUGH EXISTING FLOORS, BY DRILLING AND SMOOTH BY SANDING. USE OF A JACKHAMMER IS PERMITTED ONLY WHERE SPECIFICALLY APPROVED. MAKE HOLES THROUGH MASONRY WALLS TO ACCOMMODATE SLEEVES WITH AN IRON PIPE MASONRY CORE SAW.

GENERAL NOTES (CONTINUED):

23. TO PREVENT THE ACCUMULATION OF DUST, DEBRIS AND FOREIGN MATERIAL DURING CONSTRUCTION, PERFORM TEMPORARY DUST CONTROL PROTECTION. PROTECT DUCT AND PIPING SYSTEMS (SUPPLY AND RETURN) WITH TEMPORARY SEAL-OFFS AT ALL INLETS AND OUTLETS AT THE END OF EACH DAY'S WORK. KEEP TEMPORARY PROTECTION IN PLACE UNTIL SYSTEM IS READY FOR STARTUP.

24. THOROUGHLY CLEAN SURFACES OF DUCTING, PIPING AND EQUIPMENT THAT HAVE BECOME COVERED WITH DIRT, PLASTER, OR OTHER MATERIAL DURING HANDLING AND CONSTRUCTION BEFORE SUCH SURFACES ARE PREPARED FOR FINAL FINISH PAINTING OR ARE ENCLOSED WITHIN THE BUILDING STRUCTURE. BEFORE FINAL ACCEPTANCE, CLEAN MECHANICAL EQUIPMENT, INCLUDING PIPING, DUCTING, AND FIXTURES, AND FREE FROM DIRT, GREASE, AND FINGER MARKS. PROTECT ALL FURNITURE AND EQUIPMENT FROM DIRT AND DEBRIS. INCORPORATE HOUSEKEEPING FOR FIELD CONSTRUCTION WORK WHICH LEAVES ALL FURNITURE AND EQUIPMENT IN THE AFFECTED AREA FREE OF CONSTRUCTION GENERATED DUST AND DEBRIS; AND, ALL FLOOR SURFACES VACUUM-SWEPT CLEAN.

25. ALL DEMOLISHED EQUIPMENT BECOMES PROPERTY OF THE CONTRACTOR UNLESS OTHERWISE SPECIFIED.

26. REFER TO SPECIFICATIONS FOR PRESSURE TESTING REQUIREMENTS FOR DUCTS AND ELBOWS.

27. ALL STAINLESS STEEL DUCTING SHALL BE PAINTED WHITE.

28. CONTRACTOR IS FULLY RESPONSIBLE FOR DETAILING THE TYPE AND LOCATION OF DUCT, CHAMBER AND OTHER SUPPORTS REQUIRED FOR A COMPLETE AND FUNCTIONAL SYSTEM.

PAD 39-B ECS PURGE AIR REQUIREMENTS TABLE:

PAD 39-B ECS PURGE AIR REQUIREMENTS AND BID OPTIONS

CIRCUIT NO.	CIRCUIT DUCT NAME	SIZE	FLOW LB/MIN	FLUID	TEMP °F	MIN. PRESSURE @ MAX. FLOW RATE	MAX ABSOLUTE HUMIDITY	FIXED PRICE	FIXED PRICE BID OPTION FPO-1	FIXED PRICE BID OPTION FPO-2
NORTH HEADER										
1-N	SM	14"	50-200	AIR	45-105°F	2.75 PSIG	29 GR/LB	BASELINE		REMOVE EXISTING POST-COOLING COIL FROM NORTH COOLING CHAMBER AND REPLACE WITH NEW COIL
			50-150	GN2	45-105°F	2.75 PSIG	1 GR/LB			
2-N	CS/FS	14"	50-200	AIR	45-150°F	2.75 PSIG	29 GR/LB	BASELINE		
			50-150	GN2	45-150°F	2.75 PSIG	1 GR/LB			
5-N	SPARE	10"	50-125	AIR ONLY	45-105°F	2.75 PSIG	29 GR/LB		CONST. OPTION	
6-N	CS/IT	14"	50-225	AIR	45-150°F	2.75 PSIG	29 GR/LB	BASELINE		
			50-225	GN2	45-150°F	2.75 PSIG	1 GR/LB			
7-N	CS/AFT	16"	50-300	AIR	45-150°F	2.75 PSIG	29 GR/LB	BASELINE		
			50-300	GN2	45-150°F	2.75 PSIG	1 GR/LB			
ICPS HEADER										
3-L	ICPS	12"	50-175	AIR	45-180°F	3.6 PSIG	29 GR/LB	BASELINE		REMOVE EXISTING POST-COOLING COIL FROM ICPS COOLING CHAMBER AND REPLACE WITH NEW COIL
			50-175	GN2	45-180°F	3.6 PSIG	1 GR/LB			
4-L	SPARE	8"	50-75	AIR ONLY	45-105°F	3.6 PSIG	29 GR/LB		CONST. OPTION	
SOUTH HEADER										
8-S	CS/ENG	14"	50-250	AIR ONLY	45-105°F	2.75 PSIG	29 GR/LB	BASELINE		REMOVE EXISTING POST-COOLING COIL FROM SOUTH COOLING CHAMBER AND REPLACE WITH NEW COIL
9-S	SPARE	14"	50-250	AIR ONLY	45-105°F	2.75 PSIG	29 GR/LB		CONST. OPTION	
10-S	SPARE	14"	50-250	AIR ONLY	45-105°F	2.75 PSIG	29 GR/LB		CONST. OPTION	
11-S	EC/CC	12"	50-150	AIR ONLY	45-105°F	2.75 PSIG	29 GR/LB	BASELINE		
12-S	LAS	12"	50-150		45-105°F	2.75 PSIG	29 GR/LB	BASELINE		

KSC DESIGN DAY:

SUMMER DESIGN DAY 96°F DB AND 85°F WB.
WINTER DESIGN DAY 30.2°F SATURATED.

NOTES:

1. ALL SCALE NOTED THROUGHOUT THE DRAWINGS ARE BASED ON FULL SIZE "F" (28"x40") SHEET. ALL DIMENSION SHALL BE FIELD VERIFIED. DIMENSION SHALL BE VERIFIED WHERE APPLICABLE IF NOT ALREADY SPECIFIED.

SYM	ZONE	DESCRIPTION	DATE	APPROVED
REVISIONS				

JACOBS™
Jacobs Technology Inc.

SIGNATURES		DATE
DRAWN	MIKE VANHOOSE	3/07/14
CHECKED	HANNAH LYNCH	3/07/14
SUBMITTED	RAVI MUTHIAH	3/07/14
ST OF LICENSURE: FL LICENSE NO: 68076		
APPROVED	GLEN WARD	3/07/14
	DREW GILLESPIE	3/07/14

NATIONAL AERONAUTICS AND SPACE ADMINISTRATION
JOHN F. KENNEDY SPACE CENTER, NASA
KENNEDY SPACE CENTER, FLORIDA

KSC LAUNCH PAD 39-B
ENVIRONMENTAL CONTROL SYSTEM (ECS) REFURBISHMENT
MECHANICAL GENERAL NOTES

M-002

FILE NO.	SIZE	DWG.NO.	REV
	F	79K39602	
PCN. NO. 98898		SHEET 6 OF 187	

P:\39ASZ\DRAWINGS\PROC\M-002.DWG
07-FEB-2014 13:59
RHEALE

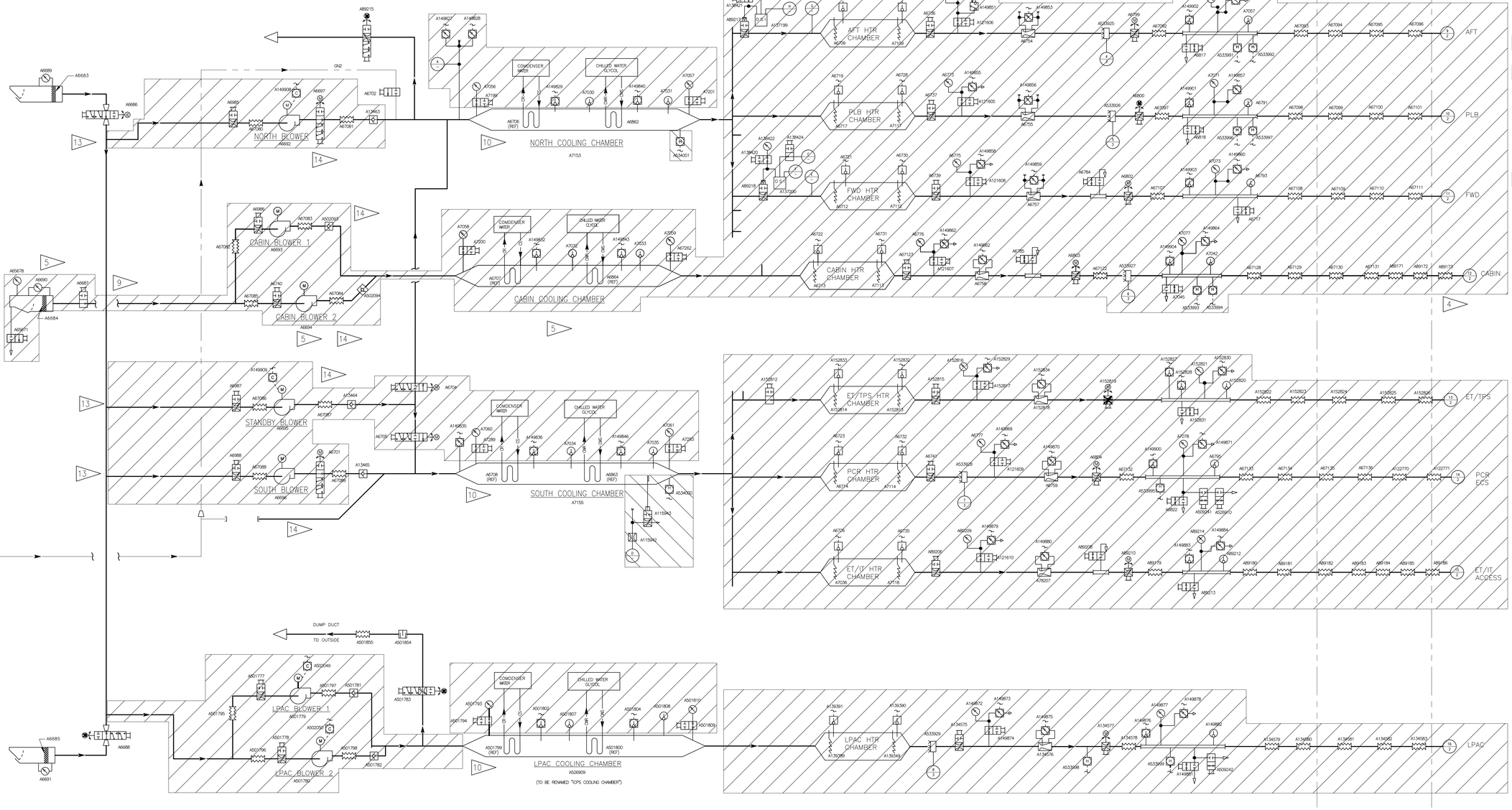

NOTES:

1. NOT USED.
2. NOT USED.
3. NOT USED.
4. DEMOLISH ALL HATCHED PIPING/DUCTING AND COMPONENTS, WHICH SHALL INCLUDE ALL INDIVIDUAL PURGE AIR CIRCUIT DUCTS.
5. DEMOLISH THE ENTIRE CABIN COOLING CIRCUIT INCLUDING BUT NOT LIMITED TO INTAKE HOOD, CABIN BLOWERS, AND CABIN COOLING CHAMBER.
6. SEE DRAWING M-004 FOR DEMOLITION PLAN VIEW.
7. SEE DRAWING M-005 FOR DEMO FOR EXISTING VERTICAL DUCT ROUTING TO MOBILE LAUNCHER.
8. SEE DWGS V-003 AND V-004 FOR HAZARDOUS MATERIAL SCHEDULE AND LOCATIONS.
9. COVER THE WALL OPENING WHEN CABIN COOLING CIRCUIT IS REMOVED. SEE S-003 WALL PENETRATION DETAIL.
10. ALL THE INSTRUMENT DEVICES ON THE COOLING CHAMBERS TO BE REMOVED.
11. CONTRACTOR SHALL COORDINATE WITH ALL OTHER DISCIPLINES AND PROVIDE A DEMOLITION PLAN FOR APPROVAL BY THE NASA CONTRACTING OFFICER.
12. ALL VENTURI FLOW METERS AND ASSOCIATED SENSOR DEVICES SHALL BE SALVAGED AND TRANSFERRED TO NASA PER THE DIRECTION OF THE CONTRACTING OFFICER.
13. ROTATE TEE OUTLET FROM ORIGINAL ANGLE TO HORIZONTAL THROUGH ROTATION AT FLANGE CONNECTION AND/OR CUTTING AND REWELDING SPOOL PIECE. SEE DRAWING M-024 FOR EXISTING DUCT CONSTRUCTION DETAILS.
14. REMOVE EXISTING FOUNDATION FLUSH WITH THE FLOOR. REPAIR CONCRETE SLAB TO MATCH EXISTING.

LEGENDS:

DEMO

SYM	ZONE	DESCRIPTION	DATE	APPROVED
REVISIONS				

JACOBS
Jacobs Technology Inc.

SIGNATURES	DATE
DRAWN MIKE VANHOOSE	3/07/14
CHECKED HANNAH LYNCH	3/07/14
SUBMITTED RAVI MUTHIAH	3/07/14
ST OF LICENSURE: FL LICENSE NO: 68076	
APPROVED GLEN WARD	3/07/14
DREW GILLESPIE	3/07/14

NATIONAL AERONAUTICS AND SPACE ADMINISTRATION
JOHN F. KENNEDY SPACE CENTER, NASA
KENNEDY SPACE CENTER, FLORIDA

KSC LAUNCH PAD 39-B
ENVIRONMENTAL CONTROL SYSTEM (ECS) REFURBISHMENT
ECS SYSTEM PURGE AIR SCHEMATIC DEMOLITION

M-003

FILE NO.	SIZE	DWG.NO.	REV
	F	79K39602	
PCN. NO. 98898		SHEET 7 OF 187	

P:\95452\DRAWINGS\PROC\M-003.DWG
06-FEB-2014 21:19
RELEASE

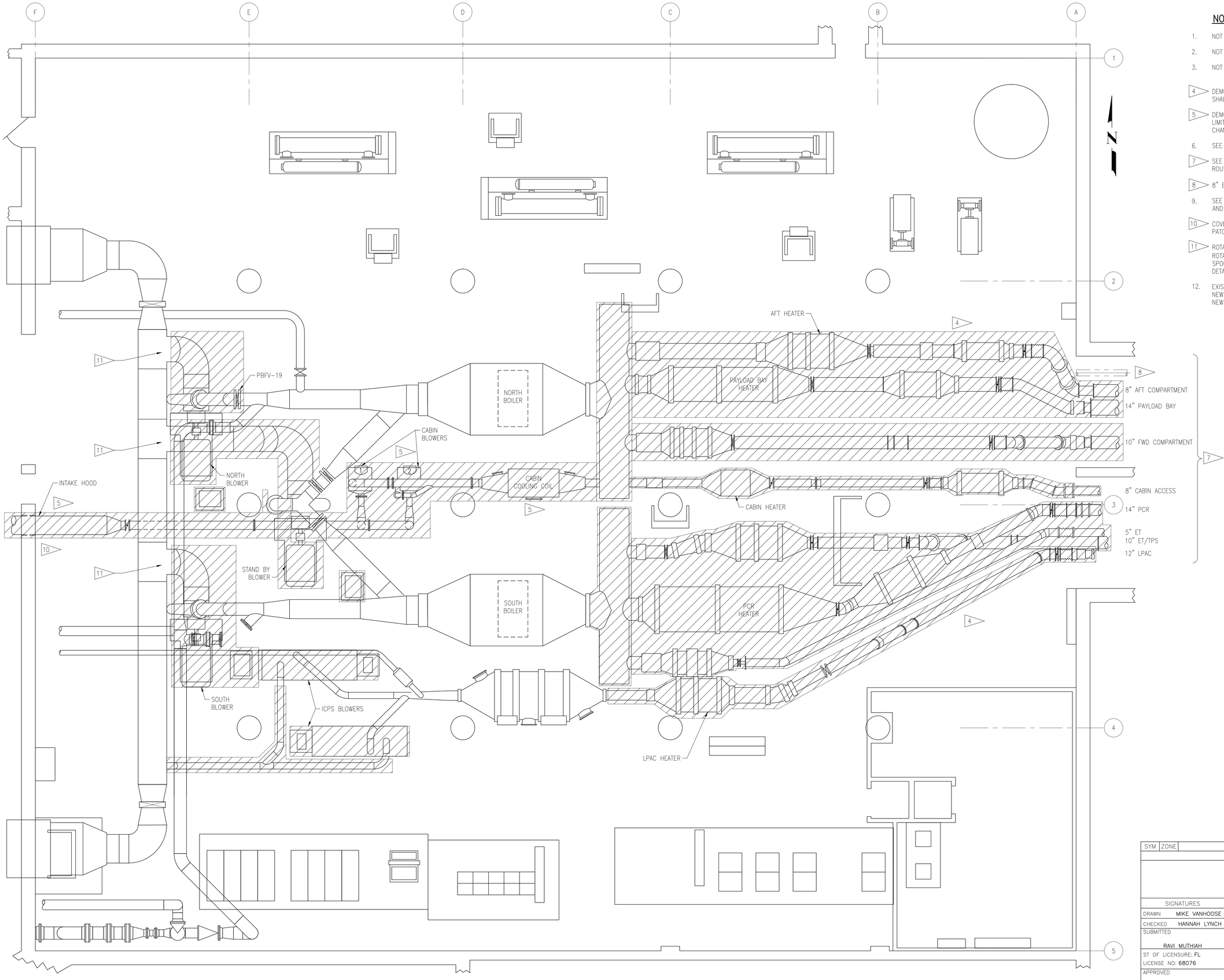

NOTES:

1. NOT USED.
2. NOT USED.
3. NOT USED.
4. DEMOLISH ALL HATCHED PIPING/DUCTING AND COMPONENTS, WHICH SHALL INCLUDE ALL INDIVIDUAL PURGE AIR CIRCUIT DUCTS.
5. DEMOLISH THE ENTIRE CABIN COOLING CIRCUIT INCLUDING BUT NOT LIMITED TO INTAKE HOOD, CABIN BLOWERS, AND CABIN COOLING CHAMBER.
6. SEE DRAWING M-003 FOR EXISTING PURGE AIR SCHEMATIC DEMO.
7. SEE DRAWING M-005 FOR DEMO FOR EXISTING VERTICAL DUCT ROUTING TO MOBILE LAUNCHER INTERFACE.
8. 8" EXISTING EMR DUCTING TO REMAIN.
9. SEE DWGS V-003 AND V-004 FOR HAZARDOUS MATERIAL SCHEDULE AND LOCATIONS.
10. COVER THE WALL OPENING AS PER WALL PENETRATION PATCH DETAIL ON DRAWING S-007.
11. ROTATE TEE OUTLET FROM ORIGINAL ANGLE TO HORIZONTAL THROUGH ROTATION AT FLANGE CONNECTION AND/OR CUTTING AND REWELDING SPOOL PIECE. SEE DRAWING M-024 FOR DUCT CONSTRUCTION DETAILS.
12. EXISTING SUPPORTS SHOULD BE LEFT IN PLACE AND REUSED FOR NEW INSTALLATION IF APPLICABLE. ALL SUPPORTS NOT SUITABLE FOR NEW INSTALLATION SHALL BE REMOVED.

LEGENDS:

DEMO

ECS ROOM PLAN

SCALE: 1/4"=1'-0"

SYM	ZONE	DESCRIPTION	DATE	APPROVED
REVISIONS				

SIGNATURES		DATE
DRAWN	MIKE VANHOOSE	3/07/14
CHECKED	HANNAH LYNCH	3/07/14
SUBMITTED	RAVI MUTHIAH	3/07/14
ST OF LICENSURE: FL LICENSE NO: 68076		
APPROVED	GLEN WARD	3/07/14
	DREW GILLESPIE	3/07/14

JACOBS
Jacobs Technology Inc.

NATIONAL AERONAUTICS AND SPACE ADMINISTRATION
JOHN F. KENNEDY SPACE CENTER, NASA
KENNEDY SPACE CENTER, FLORIDA

KSC LAUNCH PAD 39-B
ENVIRONMENTAL CONTROL SYSTEM (ECS) REFURBISHMENT
ECS SYSTEM PURGE AIR
PLAN VIEW
DEMOLITION

FILE NO.	SIZE	DWG.NO.	REV
	F	79K39602	
PCN. NO. 98898		SHEET 8 OF 187	

M-004

P:\95452\DRAWINGS\PROC\M-004.DWG
19-DEC-2013 22:42
RICHARCW

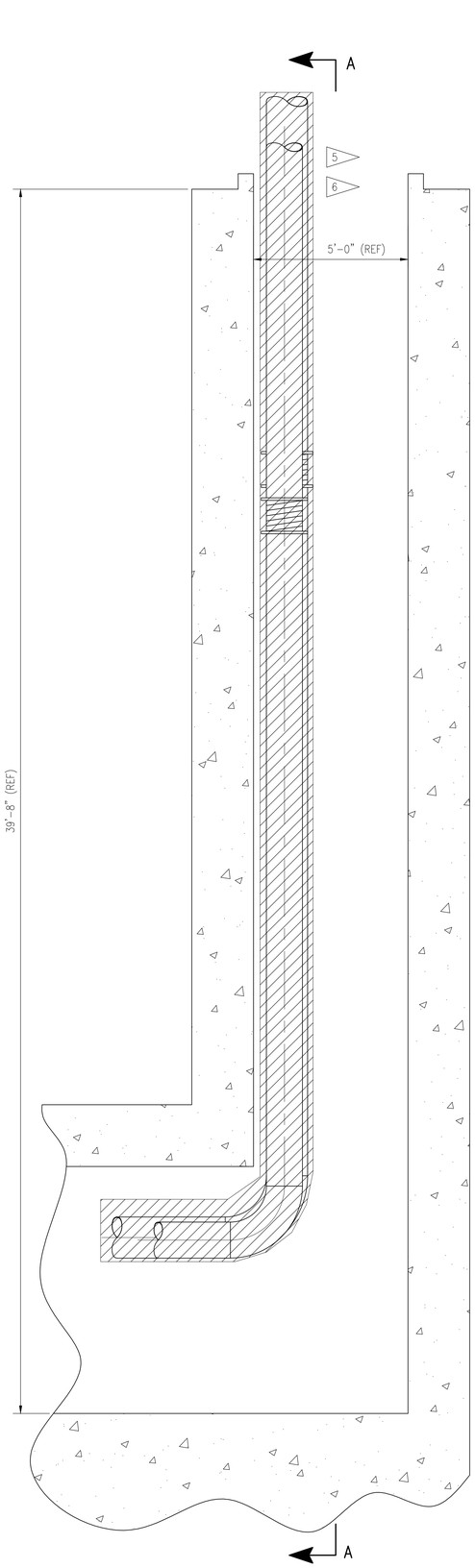

ELEVATION ECS VERTICAL TUNNEL
SCALE: 1/2"=1'-0"

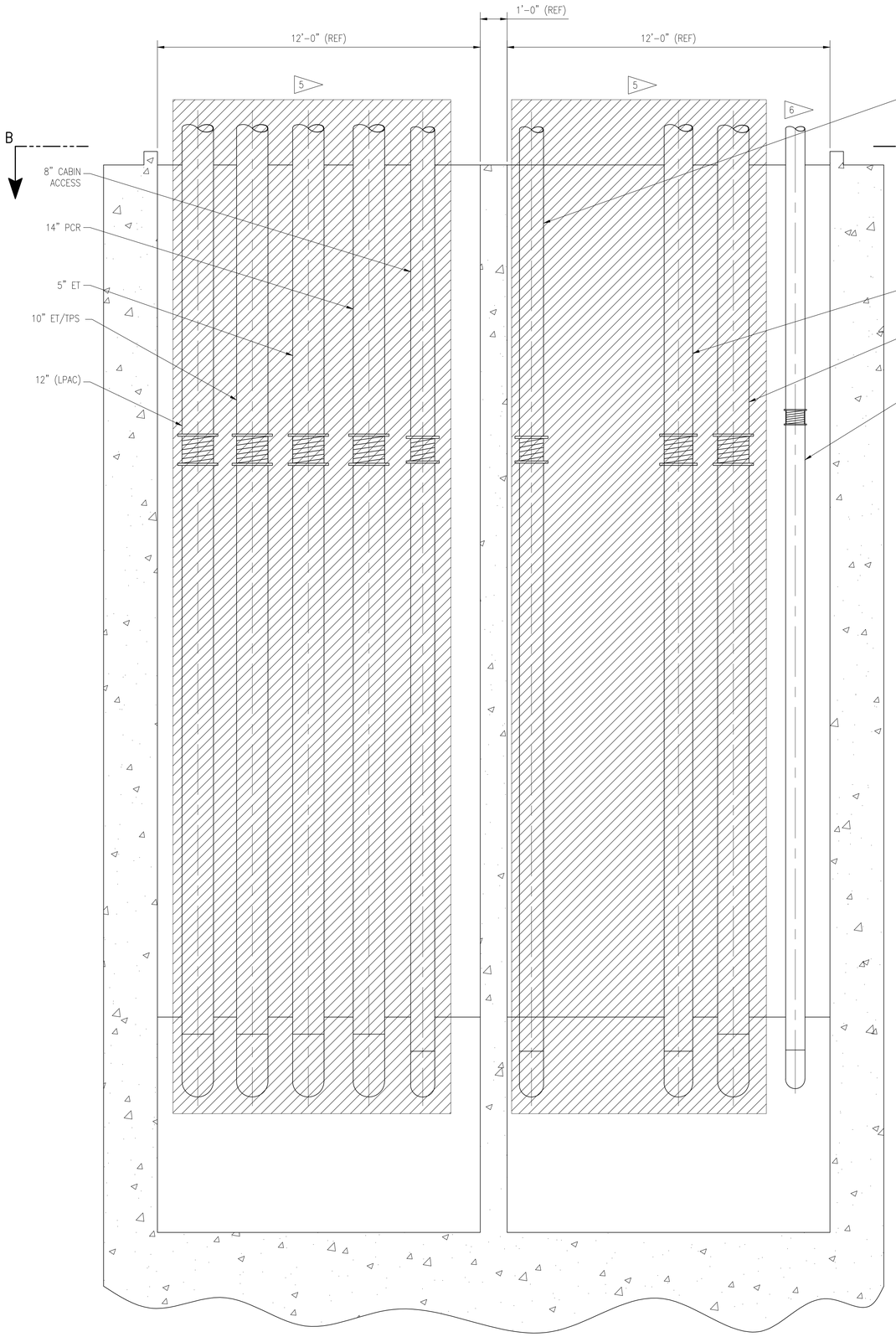

SECTION A-A
SCALE: 1/2"=1'-0"

NOTES:

1. ALL ECS PURGE DUCTS TO BE REMOVED IN TUNNEL. WATER AND EMR LINES TO REMAIN. DRAWING MAY NOT REFLECT EXACT QUANTITY OF ECS PURGE DUCTS TO BE REMOVED.
2. CONTRACTOR SHALL REMOVE ALL EXISTING ECS PURGE DUCTING FROM THE COOLING CHAMBER TO PAD SURFACE.
3. NOT USED.
4. SEE DRAWING M-004 FOR PLAN VIEW OF THE PURGE AIR DUCTING.

5 DEMOLISH ALL HATCHED PURGE AIR DUCTING IN TUNNEL ALL THE WAY TO THE INTERFACE POINT IN THE STUB TOWER.

6 EXISTING EMR DUCT TO REMAIN.

7. SEE DWGS V-003 AND V-004 FOR HAZARDOUS MATERIAL SCHEDULE AND LOCATIONS.

8 DEMOLISH EXISTING STEEL PLATE.

9 EXISTING CONDUITS TO REMAIN.

LEGENDS:

DEMO

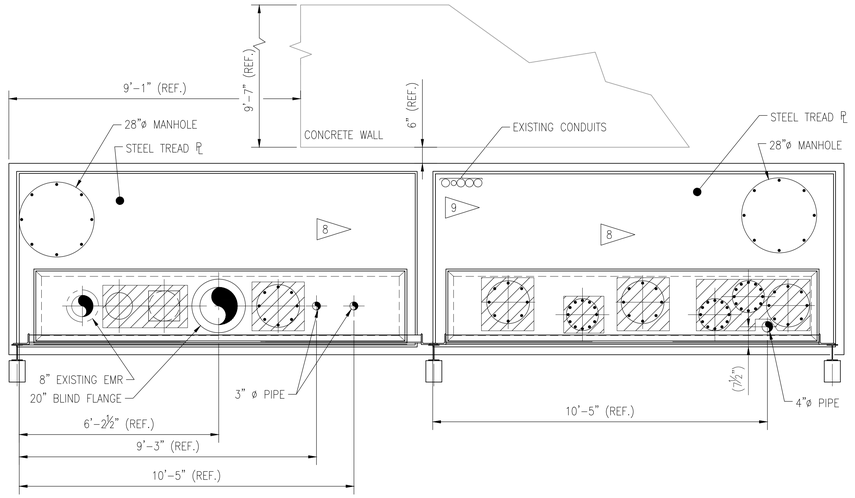

SECTION B-B
SCALE: 1/2"=1'-0"
NOTE: SECTION ROTATE 180°

SYM	ZONE	DESCRIPTION	DATE	APPROVED
REVISIONS				

JACOBS
Jacobs Technology Inc.

NATIONAL AERONAUTICS AND SPACE ADMINISTRATION
JOHN F. KENNEDY SPACE CENTER, NASA
KENNEDY SPACE CENTER, FLORIDA

SIGNATURES		DATE
DRAWN	MIKE VANHOOSE	3/07/14
CHECKED	HANNAH LYNCH	3/07/14
SUBMITTED	RAVI MUTHIAH	3/07/14
ST OF LICENSURE: FL LICENSE NO: 68076		
APPROVED	GLEN WARD	3/07/14
	DREW GILLESPIE	3/07/14

KSC LAUNCH PAD 39-B
ENVIRONMENTAL CONTROL SYSTEM (ECS) REFURBISHMENT
ECS SYSTEM PURGE AIR
ELEVATION
DEMOLITION

M-005

FILE NO.	SIZE	DWG.NO.	REV
	F	79K39602	
PCN. NO. 98898		SHEET 9 OF 187	

P:\98452\DRAWINGS\PROC\M-005.DWG
19-DEC-2013 15:51
HARDYDR

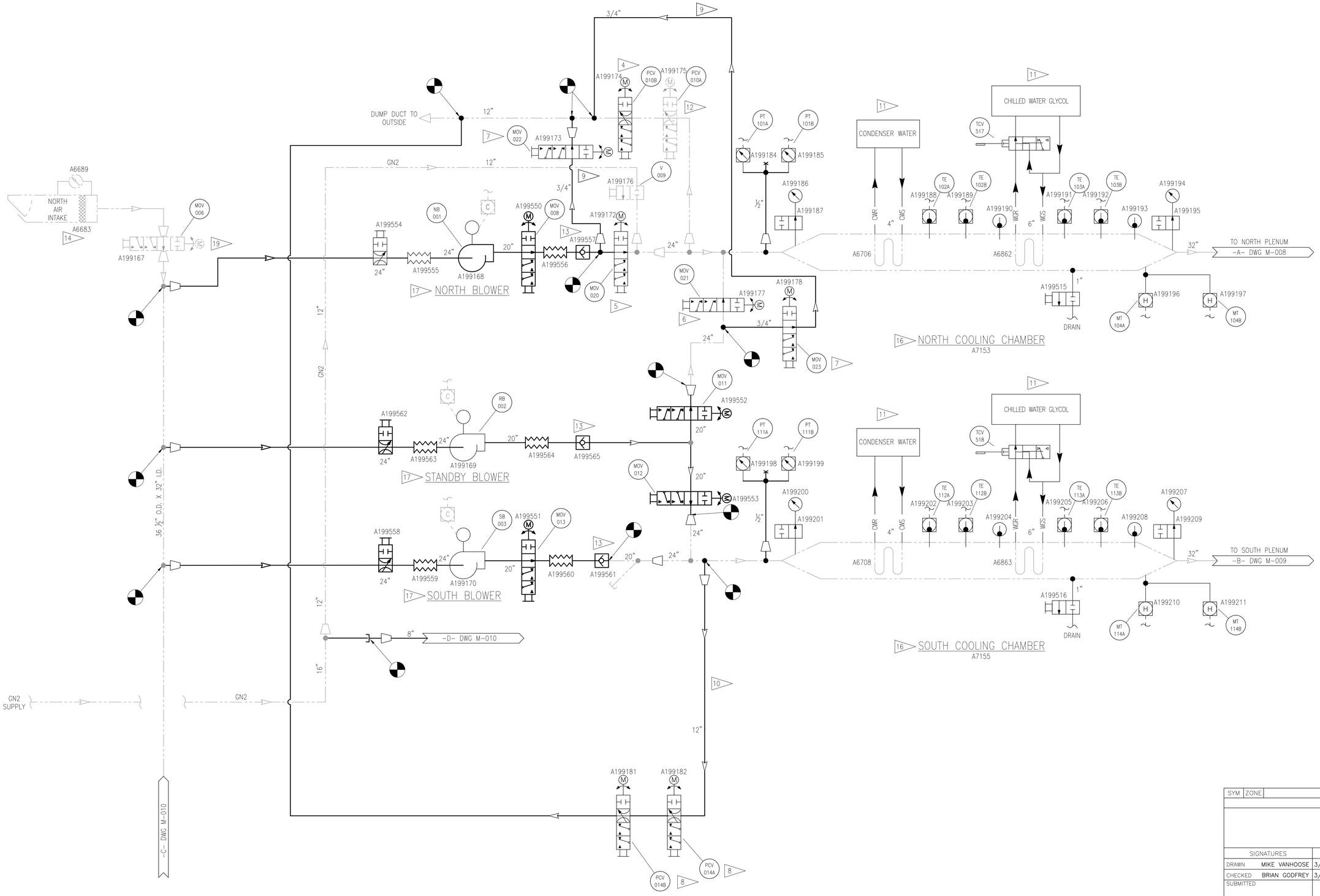

NOTES:

1. NOT USED.
2. NOT USED.
3. NOT USED.

4 PROVIDE AND INSTALL MOTORIZED PRESSURE CONTROL VALVE, PCV-010B IN SERIES TO EXISTING DUMP VALVE, PCV-010A FOR REDUNDANCY REQUIREMENT. PROVIDE MINIMUM OF 2'-0" SPACE BETWEEN BOTH VALVES FOR PROPER OPERATION AND MAINTENANCE REQUIREMENT.

5 PROVIDE AND INSTALL MOTORIZED CONTROL VALVE, MOV-020 FOR DOUBLE ISOLATION DURING GN2 PURGE TO ISOLATE THE NORTH BLOWER DUCTING.

6 PROVIDE AND INSTALL MOTORIZED CONTROL VALVE, MOV-021 FOR DOUBLE ISOLATION DURING GN2 PURGE TO ISOLATE THE SOUTH AND STANDBY BLOWER DUCTING.

7 PROVIDE AND INSTALL MOTORIZED CONTROL VALVES, MOV-022 AND MOV-023 TO BLEED THE GN2 IF TRAPPED IN THE DUCTING SECTION.

8 PROVIDE AND INSTALL MOTORIZED PRESSURE CONTROL VALVES, PCV-014A AND PCV-014B IN SERIES TO ACT AS DUMP VALVES TO CONTROL THE AIR FLOW THRU THE PURGE CIRCUITS.

9 PROVIDE AND INSTALL ¾" DIAMETER PIPE TO INCLUDE BLEED VALVE.

10 PROVIDE AND INSTALL 12" DIAMETER DUCT TO INCLUDE TWO DUMP VALVES IN SERIES.

11 SEE DRAWINGS M-028, M-029, AND M-030 FOR CONDENSER WATER AND WATER GLYCOL P&ID.

12 REPLACE THE VALVE SEATS AND SEALS. THE MATERIALS SHALL MATCH EXISTING. THESE MOTORIZED VALVES ARE FUNCTIONAL. IF ANY UNUSUAL WEAR AND TEAR OR DAMAGE IS FOUND, THE NASA CONTRACTING OFFICER SHALL BE NOTIFIED BEFORE FURTHER ACTION IS TAKEN.

13 REPLACE EXISTING CHECK VALVES WITH NEW CHECK VALVES PROVIDED WITH NEW BLOWERS.

14 REPLACE THE FILTERS.

15. DUCT INSULATION SHALL BE REPAIRED OR REPLACED AS NEEDED.

16 EXISTING COOLING CHAMBER SHALL BE REUSED. ALL THE INSTRUMENTATION SHALL BE REPLACED. EXISTING COOLING CHAMBERS SHALL BE VERIFIED FOR WITHSTANDING 8.8 PSIG PROOF PRESSURE DURING LEAK TESTING. IF ANY LEAK FOUND, THE COOLING CHAMBERS SHALL BE REPAIRED TO FIX THE LEAK. THE NASA CONTRACTING OFFICER SHALL BE NOTIFIED BEFORE FURTHER ACTION IS TAKEN.

17 PROVIDE AND INSTALL NEW BLOWERS. THE BLOWERS SHALL BE PROVIDED WITH SUCTION VALVES, FLEXIBLE CONNECTORS AND CHECK VALVES.

18. SEE DRAWINGS M-011, M-012, M-013, M-014, M-045, AND M-046 FOR EQUIPMENT SCHEDULES.

19 MOTORIZED FUNCTION IS DISABLED AND USED AS MANUAL VALVE.

20. ALL THE SENSORS ARE DIRECT MOUNTED TO THE DUCTING.

21. ALL SENSOR TUBING SHALL BE ¼"ø TO ⅝"ø STAINLESS STEEL OR NASA APPROVED.

SYM	ZONE	DESCRIPTION	DATE	APPROVED
REVISIONS				

JACOBS
Jacobs Technology Inc.

NATIONAL AERONAUTICS AND SPACE ADMINISTRATION
JOHN F. KENNEDY SPACE CENTER, NASA
KENNEDY SPACE CENTER, FLORIDA

SIGNATURES		DATE
DRAWN	MIKE VANHOOSE	3/07/14
CHECKED	BRIAN GODFREY	3/07/14
SUBMITTED	RAVI MUTHIAH	3/07/14
ST OF LICENSURE: FL LICENSE NO: 68076		
APPROVED	GLEN WARD	3/07/14
	DREW GILLESPIE	3/07/14

KSC LAUNCH PAD 39-B
ENVIRONMENTAL CONTROL SYSTEM (ECS) REFURBISHMENT
ECS SYSTEM PURGE AIR SCHEMATIC

M-007

FILE NO. | SIZE F | DWG.NO. 79K39602 | REV
PCN. NO. 98898 | SHEET 10 OF 187

P:\95452\DRAWINGS\PROC\M-007.DWG
06-FEB-2014 21:18
RHEAE

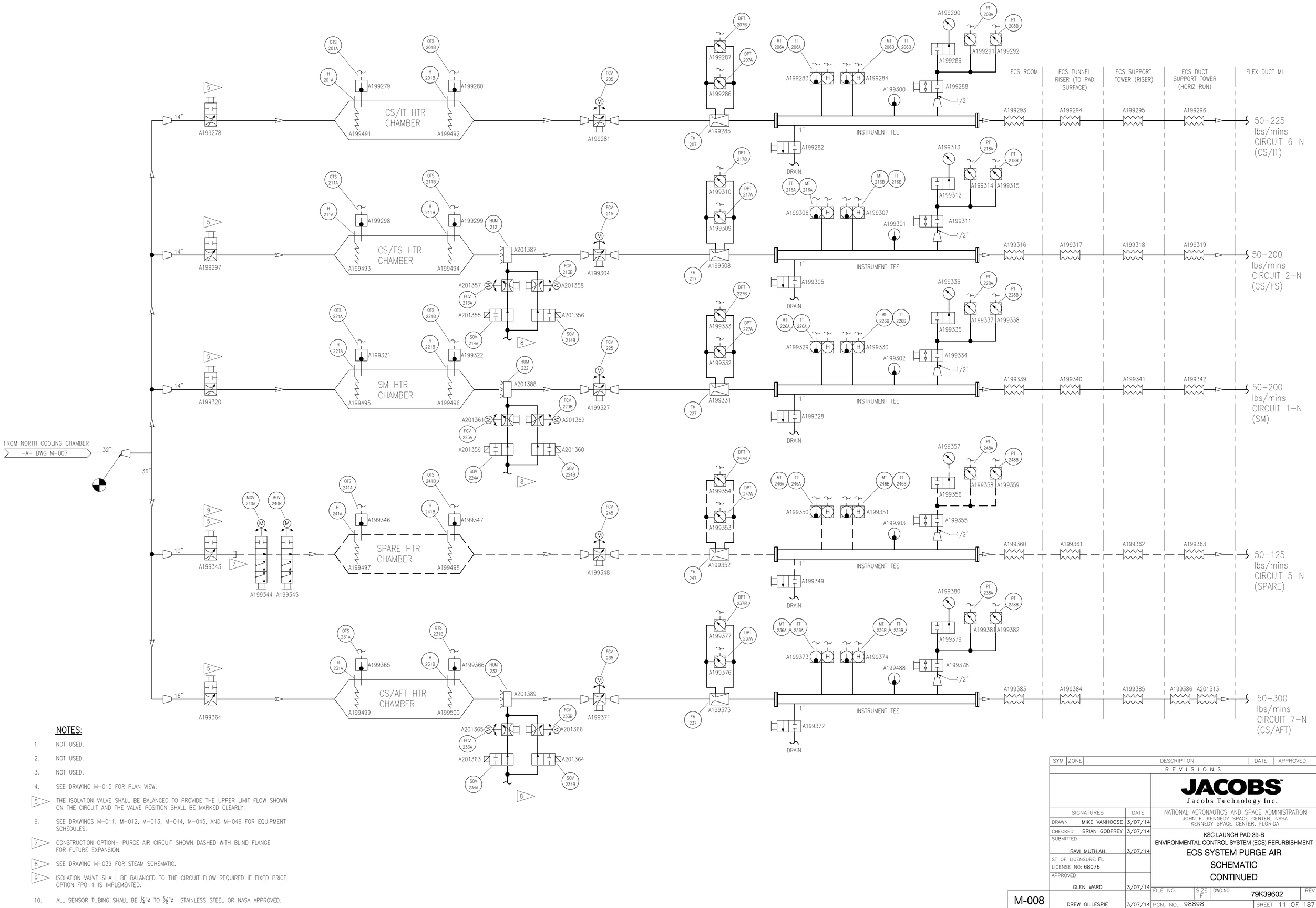

NOTES:

1. NOT USED.
2. NOT USED.
3. NOT USED.
4. SEE DRAWING M-015 FOR PLAN VIEW.
5. THE ISOLATION VALVE SHALL BE BALANCED TO PROVIDE THE UPPER LIMIT FLOW SHOWN ON THE CIRCUIT AND THE VALVE POSITION SHALL BE MARKED CLEARLY.
6. SEE DRAWINGS M-011, M-012, M-013, M-014, M-045, AND M-046 FOR EQUIPMENT SCHEDULES.
7. CONSTRUCTION OPTION- PURGE AIR CIRCUIT SHOWN DASHED WITH BLIND FLANGE FOR FUTURE EXPANSION.
8. SEE DRAWING M-039 FOR STEAM SCHEMATIC.
9. ISOLATION VALVE SHALL BE BALANCED TO THE CIRCUIT FLOW REQUIRED IF FIXED PRICE OPTION FPO-1 IS IMPLEMENTED.
10. ALL SENSOR TUBING SHALL BE ¼"ø TO ⅝"ø STAINLESS STEEL OR NASA APPROVED.

SYM	ZONE	DESCRIPTION	DATE	APPROVED
REVISIONS				

JACOBS
Jacobs Technology Inc.

SIGNATURES		DATE
DRAWN	MIKE VANHOOSE	3/07/14
CHECKED	BRIAN GODFREY	3/07/14
SUBMITTED	RAVI MUTHIAH	3/07/14
ST OF LICENSURE: FL LICENSE NO: 68076		
APPROVED	GLEN WARD	3/07/14
	DREW GILLESPIE	3/07/14

NATIONAL AERONAUTICS AND SPACE ADMINISTRATION
JOHN F. KENNEDY SPACE CENTER, NASA
KENNEDY SPACE CENTER, FLORIDA

KSC LAUNCH PAD 39-B
ENVIRONMENTAL CONTROL SYSTEM (ECS) REFURBISHMENT
ECS SYSTEM PURGE AIR
SCHEMATIC
CONTINUED

M-008

FILE NO.	SIZE	DWG.NO.	REV
	F	79K39602	

PCN. NO. 98898 SHEET 11 OF 187

P:\95452\DRAWINGS\PROC\M-008.DWG 06-FEB-2014 21:26 RHEADE

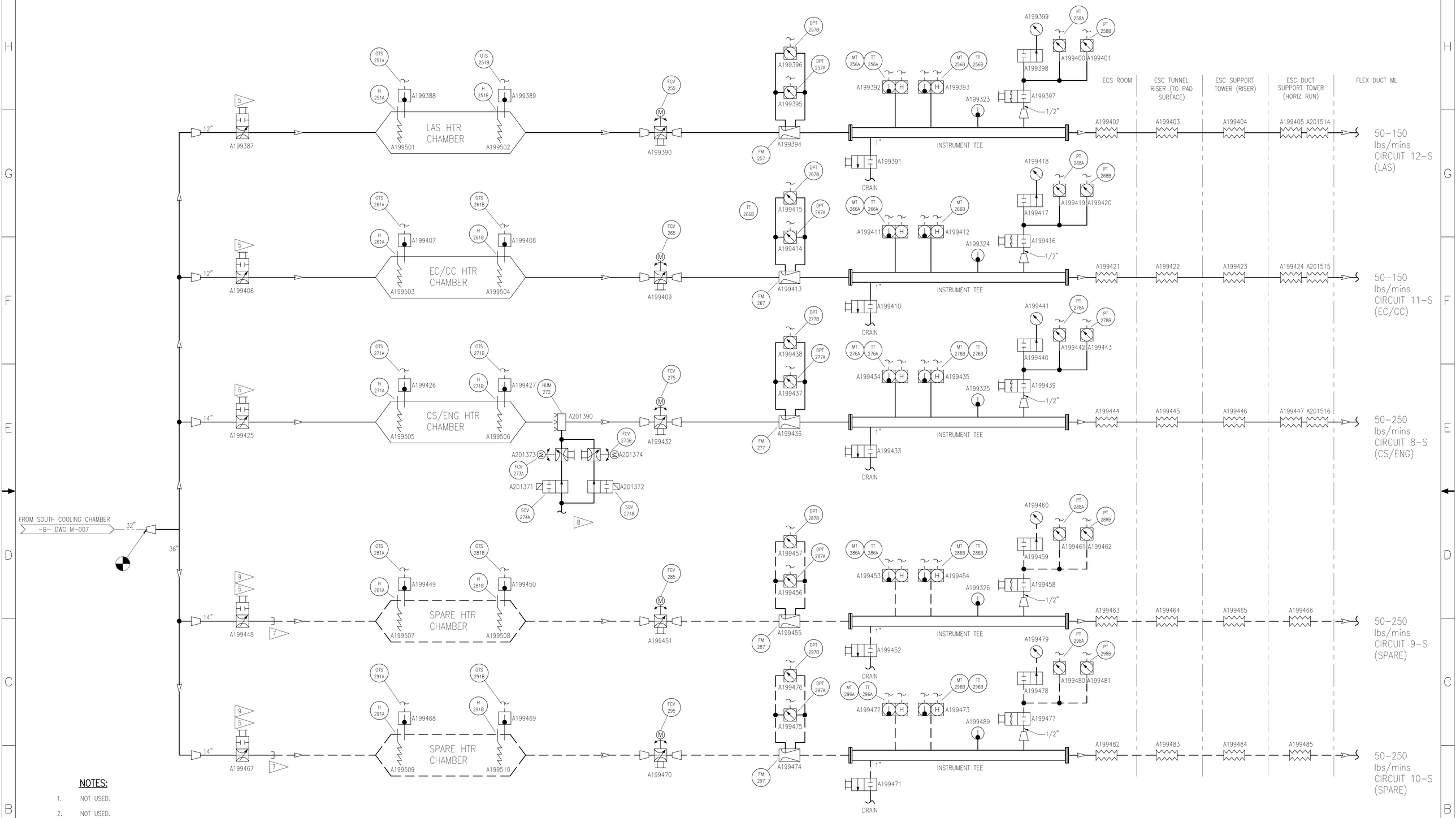

NOTES:

1. NOT USED.
2. NOT USED.
3. NOT USED.
4. SEE DRAWING M-015 FOR PLAN VIEW.
5. THE ISOLATION VALVE SHALL BE BALANCED TO PROVIDE THE FLOW SHOWN ON THE CIRCUIT AND THE VALVE POSITION SHALL BE MARKED CLEARLY.
6. SEE DRAWINGS M-011, M-012, M-013, M-014, M-045, AND M-046 FOR EQUIPMENT SCHEDULES.
7. CONSTRUCTION OPTION- PURGE AIR CIRCUIT SHOWN DASHED WITH BLIND FLANGE FOR FUTURE EXPANSION.
8. SEE DRAWING M-40 FOR STEAM SCHEMATIC.
9. ISOLATION VALVE SHALL BE BALANCED TO THE CIRCUIT FLOW REQUIRED IF FIXED PRICE OPTION FPO-1 IS IMPLEMENTED.
10. ALL SENSOR TUBING SHALL BE ¼"ø TO ⅝"ø STAINLESS STEEL OR NASA APPROVED.

SYM	ZONE	DESCRIPTION	DATE	APPROVED
REVISIONS				

JACOBS
Jacobs Technology Inc.

SIGNATURES		DATE
DRAWN	MIKE VANHOOSE	3/07/14
CHECKED	BRIAN GODFREY	3/07/14
SUBMITTED	RAVI MUTHIAH	3/07/14
ST OF LICENSURE: FL LICENSE NO: 68076		
APPROVED	GLEN WARD	3/07/14
	DREW GILLESPIE	3/07/14

NATIONAL AERONAUTICS AND SPACE ADMINISTRATION
JOHN F. KENNEDY SPACE CENTER, NASA
KENNEDY SPACE CENTER, FLORIDA

KSC LAUNCH PAD 39-B
ENVIRONMENTAL CONTROL SYSTEM (ECS) REFURBISHMENT
ECS SYSTEM PURGE AIR SCHEMATIC CONTINUED

M-009

FILE NO.	SIZE	DWG.NO.	REV
	F	79K39602	
PCN. NO. 98898		SHEET 12 OF 187	

F:\95452\DRAWINGS\PROC\M-009.DWG
06-FEB-2014 21:24
RHEAJE

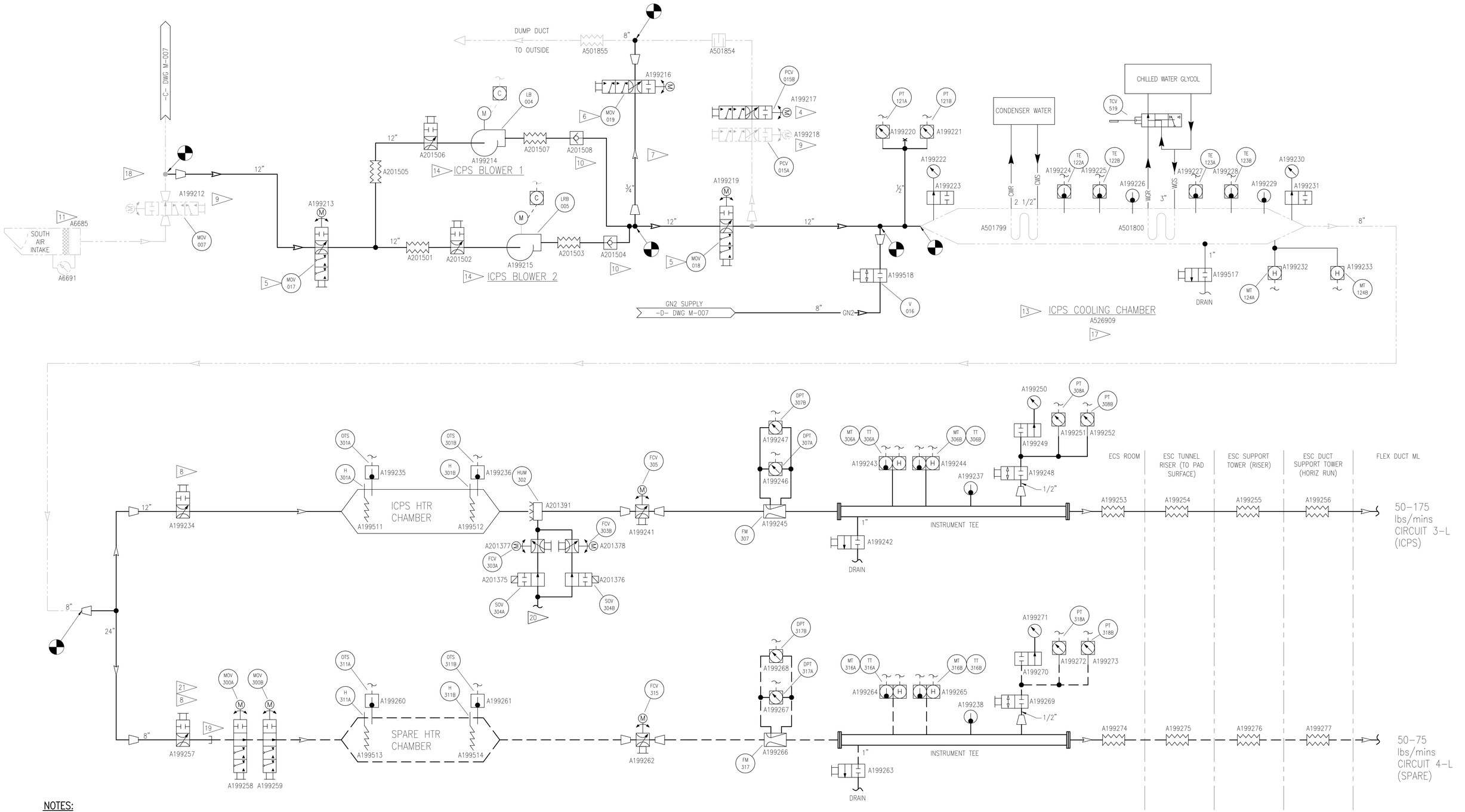

NOTES:

1. NOT USED.
2. NOT USED.
3. NOT USED.

4. PROVIDE AND INSTALL MOTORIZED PRESSURE CONTROL VALVE, PCV-015B IN SERIES TO EXISTING DUMP VALVE, PCV-015A FOR REDUNDANCY REQUIREMENT.
5. PROVIDE AND INSTALL MOTORIZED CONTROL VALVES, MOV-017 AND MOV-018 FOR DOUBLE ISOLATION DURING GN2 PURGE TO ISOLATE THE LPAC BLOWER DUCTING.
6. PROVIDE AND INSTALL MOTORIZED CONTROL VALVE, MOV-019 TO BLEED THE GN2 IF TRAPPED IN THE DUCTING SECTION.
7. PROVIDE AND INSTALL ¾" DIAMETER PIPE INCLUDE BLEED VALVE.
8. THE ISOLATION VALVE SHALL BE BALANCED TO PROVIDE THE UPPER LIMIT FLOW SHOWN ON THE CIRCUIT AND THE VALVE POSITION SHALL BE MARKED CLEARLY.
9. REPLACE THE VALVE SEATS AND SEALS. THE MATERIALS SHALL MATCH EXISTING. THESE MOTORIZED VALVES ARE FUNCTIONAL. IF ANY UNUSUAL WEAR AND TEAR OR DAMAGE IS FOUND, THE NASA CONTRACTING OFFICER SHALL BE NOTIFIED BEFORE FURTHER ACTION IS TAKEN.
10. REPLACE EXISTING CHECK VALVES WITH NEW CHECK VALVES PROVIDED WITH NEW BLOWERS.
11. REPLACE THE FILTERS IN THE SOUTH AIR INTAKE HOOD.
12. DUCT INSULATION SHALL BE REPAIRED OR REPLACED AS NEEDED.
13. EXISTING COOLING CHAMBER SHALL BE REUSED. ALL THE INSTRUMENTATION SHALL BE REPLACED. PRE-COOL COILS SHALL BE REPLACED. EXISTING COOLING CHAMBERS SHALL BE VERIFIED FOR WITHSTANDING 8.8 PSIG PROOF PRESSURE DURING LEAK TESTING. IF ANY DISCREPANCIES ASSOCIATED WITH LEAK TESTING, THE NASA CONTRACTING OFFICER SHALL BE NOTIFIED BEFORE FURTHER ACTION IS TAKEN.
14. PROVIDE AND INSTALL NEW BLOWERS. THE BLOWERS SHALL BE PROVIDED WITH SUCTION VALVES, FLEXIBLE CONNECTORS AND CHECK VALVES.
15. SEE DRAWINGS M-011, M-012, M-013, M-014, M-045, AND M-046 FOR EQUIPMENT SCHEDULES.
16. NOT USED.
17. EXISTING "LPAC" COOLING CHAMBER SHALL BE IDENTIFIED AS "ICPS" COOLING CHAMBER.
18. MOTORIZED FUNCTION IS DISABLED AND USED AS MANUAL VALVE.
19. CONSTRUCTION OPTION- PURGE AIR CIRCUIT SHOWN DASHED WITH BLIND FLANGE FOR FUTURE EXPANSION.
20. SEE DRAWING M-040 FOR STEAM SCHEMATICS.
21. ISOLATION VALVE SHALL BE BALANCED TO THE CIRCUIT FLOW REQUIRED IF FIXED PRICE OPTION FPO-1 IS IMPLEMENTED.
22. ALL SENSOR TUBING SHALL BE ¼"ø TO ⅝"ø STAINLESS STEEL OR NASA APPROVED.

SYM	ZONE	DESCRIPTION	DATE	APPROVED
REVISIONS				

JACOBS
Jacobs Technology Inc.

SIGNATURES		DATE
DRAWN	MIKE VANHOOSE	3/07/14
CHECKED	BRIAN GODFREY	3/07/14
SUBMITTED	RAVI MUTHIAH	3/07/14
ST OF LICENSURE: FL LICENSE NO: 68076		
APPROVED	GLEN WARD	3/07/14
	DREW GILLESPIE	3/07/14

NATIONAL AERONAUTICS AND SPACE ADMINISTRATION
JOHN F. KENNEDY SPACE CENTER, NASA
KENNEDY SPACE CENTER, FLORIDA

KSC LAUNCH PAD 39-B
ENVIRONMENTAL CONTROL SYSTEM (ECS) REFURBISHMENT

ECS SYSTEM PURGE AIR SCHEMATIC CONTINUED

M-010

FILE NO.	SIZE	DWG.NO.	REV
	F	79K39602	
PCN. NO. 98898		SHEET 13 OF 187	

P:\95452\DRAWINGS\PROC\M-010.DWG
06-FEB-2014 21:22
RHEALE

PURGE AIR SCHEDULE			
A NO.	DEVICE NO.	DESCRIPTION	REMARKS
A199167	MOV–006	MOTORIZED VALVE	EXISTING. A6686 TO BE RENUMBERED
A199168	NB–001	NORTH BLOWER	A6692 TO BE REMOVED. SEE M–045 FOR NEW BLOWER DETAILS
A199169	RB–002	REDUNDANT BLOWER	A6695 TO BE REMOVED. SEE M–045 FOR NEW BLOWER DETAILS
A199170	SB–003	SOUTH BLOWER	A6696 TO BE REMOVED. SEE M–045 FOR NEW BLOWER DETAILS
A199550	MOV–008	MOTORIZED VALVE	A6697 TO BE REMOVED. SEE M–045 FOR NEW MOTORIZED VALVE DETAILS
A199172	MOV–020	MOTORIZED VALVE	SEE M–045
A199173	MOV–022	MOTORIZED VALVE	SEE M–045
A199174	PCV–010B	PRESSURE CONTROL VALVE	SEE M–045
A199175	PCV–010A	PRESSURE CONTROL VALVE	EXISTING. A89215 TO BE RENUMBERED. REPLACE THE SEATS AND SEALS, TYCO VALVE, NASA PART NUMBER 100–12IN (AIR/GN2) ELECT, 75M15214–PBFV–16 FSN, 482000–BE10614
A199176	V–009	ISOLATION VALVE	EXISTING. A6702 TO BE RENUMBERED
A199177	MOV–021	MOTORIZED VALVE	SEE M–045
A199178	MOV–023	MOTORIZED VALVE	SEE M–045
A199552	MOV–011	MOTORIZED VALVE	A6704 TO BE REMOVED. SEE M–045 FOR NEW MOTORIZED VALVE DETAILS
A199553	MOV–012	MOTORIZED VALVE	A6705 TO BE REMOVED. SEE M–045 FOR NEW MOTORIZED VALVE DETAILS
A199181	PCV–014B	PRESSURE CONTROL VALVE	SEE M–045
A199182	PCV–014A	PRESSURE CONTROL VALVE	SEE M–045
A199551	MOV–013	MOTORIZED VALVE	A6701 TO BE REMOVED. SEE M–045 FOR NEW MOTORIZED VALVE DETAILS
A199184	PT–101A	PRESSURE TRANSMITTER	SEE M–046
A199185	PT–101B	PRESSURE TRANSMITTER	SEE M–046
A199186		PRESSURE GAUGE, ASHCROFT PROCESS PRESSURE GAUGE TYPE 1259, ASME B 40.1 GRADE 2A OR APPROVED EQUAL, +/– 0.5% OF SPAN, PRESSURE RANGE FROM 0 TO 50 PSI	
A199187		BLOCK AND BLEED VALVE, ANDERSON GREENWOOD MODEL M9 OR APPROVED EQUAL	
A199188	TE–102A	TEMPERATURE ELEMENT	SEE M–046
A199189	TE–102B	TEMPERATURE ELEMENT	SEE M–046
A199190		TEMPERATURE GAUGE, ASHCROFT MODEL NO. 600B–01 DIRECT MOUNTED, 4 1/2" ASME B 40.3 GRADE A, +/–1% OF SPAN, OR APPROVED EQUAL, TEMPERATURE RANGE FROM 0 TO 200 DEG F	
A199191	TE–103A	TEMPERATURE ELEMENT	SEE M–046
A199192	TE–103B	TEMPERATURE ELEMENT	SEE M–046
A199193		TEMPERATURE GAUGE, ASHCROFT MODEL NO. 600B–01 DIRECT MOUNTED, 4 1/2" ASME B 40.3 GRADE A, +/–1% OF SPAN, OR APPROVED EQUAL, TEMPERATURE RANGE FROM 0 TO 200 DEG F	
A199194		PRESSURE GAUGE, ASHCROFT PROCESS PRESSURE GAUGE TYPE 1259, ASME B 40.1 GRADE 2A OR APPROVED EQUAL, +/– 0.5% OF SPAN, PRESSURE RANGE FROM 0 TO 50 PSI	
A199195		BLOCK AND BLEED VALVE, ANDERSON GREENWOOD MODEL M9 OR APPROVED EQUAL	
A199196	MT–104A	MOISTURE TRANSMITTER	SEE M–046
A199197	MT–104B	MOISTURE TRANSMITTER	SEE M–046
A199198	PT–111A	PRESSURE TRANSMITTER	SEE M–046
A199199	PT–111B	PRESSURE TRANSMITTER	SEE M–046
A199200		PRESSURE GAUGE, ASHCROFT PROCESS PRESSURE GAUGE TYPE 1259, ASME B 401 GRADE 2A OR APPROVED EQUAL, +/– 05% OF SPAN, PRESSURE RANGE FROM 0 TO 50 PSI	
A199201		BLOCK AND BLEED VALVE, ANDERSON GREENWOOD MODEL M9 OR APPROVED EQUAL	
A199202	TE–112A	TEMPERATURE ELEMENT	SEE M–046
A199203	TE–112B	TEMPERATURE ELEMENT	SEE M–046
A199204		TEMPERATURE GAUGE, ASHCROFT MODEL NO. 600B–01 DIRECT MOUNTED, 4 1/2" ASME B 40.3 GRADE A, +/–1% OF SPAN, OR APPROVED EQUAL, TEMPERATURE RANGE FROM 0 TO 200 DEG F	
A199205	TE–113A	TEMPERATURE ELEMENT	SEE M–046
A199206	TE–113B	TEMPERATURE ELEMENT	SEE M–046
A199207		PRESSURE GAUGE, ASHCROFT PROCESS PRESSURE GAUGE TYPE 1259, ASME B 40.1 GRADE 2A OR APPROVED EQUAL, +/– 0.5% OF SPAN, PRESSURE RANGE FROM 0 TO 50 PSI	
A199208		TEMPERATURE GAUGE, ASHCROFT MODEL NO. 600B–01 DIRECT MOUNTED, 4 1/2" ASME B 40.3 GRADE A, +/–1% OF SPAN, OR APPROVED EQUAL, TEMPERATURE RANGE FROM 0 TO 200 DEG F	
A199209		BLOCK AND BLEED VALVE, ANDERSON GREENWOOD MODEL M9 OR APPROVED EQUAL	
A199210	MT–114A	MOISTURE TRANSMITTER	SEE M–046
A199211	MT–114B	MOISTURE TRANSMITTER	SEE M–046
A199212	MOV–007	MOTORIZED VALVE	EXISTING. A6688 TO BE RENUMBERED. REPLACE THE SEATS AND SEALS, TYCO VALVE, NASA PART NUMBER 640–24IN (AIR) ELECT, 75M15214–PBFV–26 FSN, 482000–BE10624
A199213	MOV–017	MOTORIZED VALVE	SEE M–045
A6683		FILTERS, NASA PART NUMBER 43T95 75M15214–PF–1 FSN, 413000–K801650 OR APPROVED EQUAL. INTAKE LOUVER DIMENSION IS 72" X 72". FILTERS SHALL MEET 95 – 97% EFFICICIENCY REQUIREMENTS	EXISTING FILTER FRAMES AND DIFFERENTIAL PRESSRUE GAGE TO REMAIN
A6685		FILTERS, NASA PART NUMBER 43T95 75M15214–PF–1 FSN, 413000–K801650 OR APPROVED EQUAL. INTAKE LOUVER DIMENSION IS 72" X 72". FILTERS SHALL MEET 95 – 97% EFFICICIENCY REQUIREMENTS	EXISTING FILTER FRAMES AND DIFFERENTIAL PRESSRUE GAGE TO REMAIN

PURGE AIR SCHEDULE CONTINUED			
A NO.	DEVICE NO.	DESCRIPTION	REMARKS
A199214	LB–004	ICPS BLOWER	A501779 TO BE REMOVED. SEE M–045 FOR NEW BLOWER DETAILS
A199215	LRB–005	ICPS REDUNDANT BLOWER	A501780 TO BE REMOVED. SEE M–045 FOR NEW BLOWER DETAILS
A199216	MOV–019	MOTORIZED VALVE	SEE M–045
A199217	PCV–015B	PRESSURE CONTROL VALVE	SEE M–045
A199218	PCV–015A	PRESSURE CONTROL VALVE	EXISTING. A501783 TO BE RENUMBERED. REPLACE THE SEATS AND SEALS, TYCO VALVE SERIES 100, MOTORIZED, NASA PART NUMBER W DL66A582 OR DL66C582 OPERATOR 75M15214–PBFV–14
A199219	MOV–018	MOTORIZED VALVE	SEE M–045
A199220	PT–121A	PRESSURE TRANSMITTER	SEE M–046
A199221	PT–121B	PRESSURE TRANSMITTER	SEE M–046
A199222		PRESSURE GAUGE, ASHCROFT PROCESS PRESSURE GAUGE TYPE 1259, ASME B 40.1 GRADE 2A OR APPROVED EQUAL, +/– 0.5% OF SPAN, PRESSURE RANGE FROM 0 TO 50 PSI	
A199223		BLOCK AND BLEED VALVE, ANDERSON GREENWOOD MODEL M9 OR APPROVED EQUAL	
A199224	TE–122A	TEMPERATURE ELEMENT	SEE M–046
A199225	TE–122B	TEMPERATURE ELEMENT	SEE M–046
A199226		TEMPERATURE GAUGE, ASHCROFT MODEL NO. 600B–01 DIRECT MOUNTED, 4 1/2" ASME B 40.3 GRADE A, +/–1% OF SPAN, OR APPROVED EQUAL, TEMPERATURE RANGE FROM 0 TO 200 DEG F	
A199227	TE–123A	TEMPERATURE ELEMENT	SEE M–046
A199228	TE–123B	TEMPERATURE ELEMENT	SEE M–046
A199229		TEMPERATURE GAUGE, ASHCROFT MODEL NO. 600B–01 DIRECT MOUNTED, 4 1/2" ASME B 40.3 GRADE A, +/–1% OF SPAN, OR APPROVED EQUAL, TEMPERATURE RANGE FROM 0 TO 200 DEG F	
A199230		PRESSURE GAUGE, ASHCROFT PROCESS PRESSURE GAUGE TYPE 1259, ASME B 40.1 GRADE 2A OR APPROVED EQUAL, +/– 0.5% OF SPAN, PRESSURE RANGE FROM 0 TO 50 PSI	
A199231		BLOCK AND BLEED VALVE, ANDERSON GREENWOOD MODEL M9 OR APPROVED EQUAL	
A199232	MT–124A	MOISTURE TRANSMITTER	SEE M–046
A199233	MT–124B	MOISTURE TRANSMITTER	SEE M–046
A199234		ISOLATION VALVE, JAMESBURY METSO AUTOMATION 12" SERIES 815 OR APPROVED EQUAL WITH LOCKING LEVER HANDLE	
A199235	OTS–301A	OVER TEMPERATURE SWITCH	PROVIDED WITH ELECTRIC HEATER. SEE M–046
A199236	OTS–301B	OVER TEMPERATURE SWITCH	PROVIDED WITH ELECTRIC HEATER. SEE M–046
A201377	FCV–303A	FLOW CONTROL VALVE	INCLUDED IN BOILER AND STEAM EQUIPMENT SCHEDULE. SEE M–041 AND M–046
A201378	FCV–303B	VALVE FLOW CONTROL	INCLUDED IN BOILER AND STEAM EQUIPMENT SCHEDULE. SEE M–041 AND M–046
A201375	SOV–304A	SOLENOID VALVE	INCLUDED IN BOILER AND STEAM EQUIPMENT SCHEDULE. SEE M–041 AND M–046
A201376	SOV–304B	SOLENOID VALVE	INCLUDED IN BOILER AND STEAM EQUIPMENT SCHEDULE. SEE M–041 AND M–046
A199241	FCV–305	FLOW CONTROL VALVE	SEE M–045
A199242		DRAIN VALVE, BRAY SERIES 51 BALL VALVE 1", FULL PORT, BRASS BODY, PTFE SEATS, CHROME PLATED BRASS BALL MATERIAL AND NPT THREADED OR APPROVED EQUAL	
A199243	MT–306A TT–306A	MOISTURE AND TEMPERATURE TRANSMITTER	SEE M–046
A199244	MT–306B TT–306B	MOISTURE AND TEMPERATURE TRANSMITTER	SEE M–046
A199245	FM–307	VENTURI FLOW METER	SEE M–045
A199246	DPT–307A	DIFFERENTIAL PRESSURE TRANSMITTER	PROVIDED WITH FLOWMETER. SEE M–045
A199247	DPT–307B	DIFFERENTIAL PRESSURE TRANSMITTER	PROVIDED WITH FLOWMETER. SEE M–045
A199248		ISOLATION VALVE, PARKER HNV*8FF, GLOBE STYLE BAR STOCK NEEDLE VALVE HNV SERIES OR APPROVED EQUAL	
A199249		BLOCK AND BLEED VALVE, ANDERSON GREENWOOD MODEL M9 OR APPROVED EQUAL	
A199250		PRESSURE GAUGE, ASHCROFT PROCESS PRESSURE GAUGE TYPE 1259, ASME B 40.1 GRADE 2A OR APPROVED EQUAL, +/– 0.5% OF SPAN, PRESSURE RANGE FROM 0 TO 50 PSI	
A199251	PT–308A	PRESSURE TRANSMITTER	SEE M–046
A199252	PT–308B	PRESSURE TRANSMITTER	SEE M–046
A199253		EXPANSION JOINT, SOUTHEASTERN SERVICE COMPANY, FLEXIBLE TUBING CORPORATION, MODEL 75M15214–12 FIG.1 INNER, 75M15214–18 FIG. 2 OUTER OR APPROVED EQUAL	SEE M–022
A199254		EXPANSION JOINT, SOUTHEASTERN SERVICE COMPANY, FLEXIBLE TUBING CORPORATION, MODEL 75M15214–12 FIG.1 INNER, 75M15214–18 FIG. 2 OUTER OR APPROVED EQUAL	SEE M–022
A199255		EXPANSION JOINT, SOUTHEASTERN SERVICE COMPANY, FLEXIBLE TUBING CORPORATION, MODEL 75M15214–12 FIG.1 INNER, 75M15214–18 FIG. 2 OUTER OR APPROVED EQUAL	SEE M–022
A199256		EXPANSION JOINT, SOUTHEASTERN SERVICE COMPANY, FLEXIBLE TUBING CORPORATION, MODEL 75M15214–12 FIG.1 INNER, 75M15214–18 FIG. 2 OUTER OR APPROVED EQUAL	SEE M–022
A199257		ISOLATION VALVE, JAMESBURY METSO AUTOMATION 8" SERIES 815 OR APPROVED EQUAL WITH LOCKING LEVER HANDLE	
A199258	MOV–300A	MOTORIZED VALVE	SEE M–045
A199259	MOV–300B	MOTORIZED VALVE	SEE M–045

SYM	ZONE	DESCRIPTION	DATE	APPROVED
REVISIONS				

JACOBS
Jacobs Technology Inc.

SIGNATURES	DATE
DRAWN MIKE VANHOOSE	3/07/14
CHECKED BRIAN GODFREY	3/07/14
SUBMITTED RAVI MUTHIAH	3/07/14
ST OF LICENSURE: FL LICENSE NO: 68076	
APPROVED GLEN WARD	3/07/14
DREW GILLESPIE	3/07/14

NATIONAL AERONAUTICS AND SPACE ADMINISTRATION
JOHN F. KENNEDY SPACE CENTER, NASA
KENNEDY SPACE CENTER, FLORIDA

KSC LAUNCH PAD 39-B
ENVIRONMENTAL CONTROL SYSTEM (ECS) REFURBISHMENT
ECS SYSTEM PURGE AIR EQUIPMENT SCHEDULE

M-011

FILE NO.	SIZE	DWG.NO.	REV
	F	79K39602	
PCN. NO. 98898		SHEET 14 OF 187	

PURGE AIR SCHEDULE CONTINUED			
A NO.	DEVICE NO.	DESCRIPTION	REMARKS
A199260	OTS-311A	OVER TEMPERATURE SWITCH	PROVIDED WITH ELECTRIC HEATER. SEE M-046
A199261	OTS-311B	OVER TEMPERATURE SWITCH	PROVIDED WITH ELECTRIC HEATER. SEE M-046
A199262	FCV-315	FLOW CONTROL VALVE	SEE M-045
A199263		DRAIN VALVE, BRAY SERIES 51 BALL VALVE 1", FULL PORT, BRASS BODY, PTFE SEATS, CHROME PLATED BRASS BALL MATERIAL AND NPT THREADED OR APPROVED EQUAL	
A199264	MT-316A TT-316A	MOISTURE AND TEMPERATURE TRANSMITTER	SEE M-046
A199265	MT-316B TT-316B	MOISTURE AND TEMPERATURE TRANSMITTER	SEE M-046
A199266	FM-317	VENTURI FLOW METER	SEE M-045
A199267	DPT-317A	DIFFERENTIAL PRESSURE TRANSMITTER	PROVIDED WITH FLOWMETER. SEE M-045
A199268	DPT-317B	DIFFERENTIAL PRESSURE TRANSMITTER	PROVIDED WITH FLOWMETER. SEE M-045
A199269		ISOLATION VALVE, PARKER HNV*8FF, GLOBE STYLE BAR STOCK NEEDLE VALVE HNV SERIES OR APPROVED EQUAL	
A199270		BLOCK AND BLEED VALVE, ANDERSON GREENWOOD MODEL M9 OR APPROVED EQUAL	
A199271		PRESSURE GAUGE, ASHCROFT PROCESS PRESSURE GAUGE TYPE 1259, ASME B 40.1 GRADE 2A OR APPROVED EQUAL, +/- 0.5% OF SPAN, PRESSURE RANGE FROM 0 TO 50 PSI	
A199272	PT-318A	PRESSURE TRANSMITTER	SEE M-046
A199273	PT-318B	PRESSURE TRANSMITTER	SEE M-046
A199274		EXPANSION JOINT, SOUTHEASTERN SERVICE COMPANY, FLEXIBLE TUBING CORPORATION, MODEL 75M15214-8 FIG.1 INNER, 75M15214-14 FIG. 2 OUTER OR APPROVED EQUAL	SEE M-022
A199275		EXPANSION JOINT, SOUTHEASTERN SERVICE COMPANY, FLEXIBLE TUBING CORPORATION, MODEL 75M15214-8 FIG.1 INNER, 75M15214-14 FIG. 2 OUTER OR APPROVED EQUAL	SEE M-022
A199276		EXPANSION JOINT, SOUTHEASTERN SERVICE COMPANY, FLEXIBLE TUBING CORPORATION, MODEL 75M15214-8 FIG.1 INNER, 75M15214-14 FIG. 2 OUTER OR APPROVED EQUAL	SEE M-022
A199277		EXPANSION JOINT, SOUTHEASTERN SERVICE COMPANY, FLEXIBLE TUBING CORPORATION, MODEL 75M15214-8 FIG.1 INNER, 75M15214-14 FIG. 2 OUTER OR APPROVED EQUAL	SEE M-022
A199278		ISOLATION VALVE, JAMESBURY METSO AUTOMATION 14" SERIES 815 WITH HANDWHEEL	
A199279	OTS-201A	OVER TEMPERATURE SWITCH	PROVIDED WITH ELECTRIC HEATER. SEE M-046
A199280	OTS-201B	OVER TEMPERATURE SWITCH	PROVIDED WITH ELECTRIC HEATER. SEE M-046
A199281	FCV-205	FLOW CONTROL VALVE	SEE M-045
A199282		DRAIN VALVE, BRAY SERIES 51 BALL VALVE 1", FULL PORT, BRASS BODY, PTFE SEATS, CHROME PLATED BRASS BALL MATERIAL AND NPT THREADED OR APPROVED EQUAL	
A199283	MT-206A TT-206A	MOISTURE AND TEMPERATURE TRANSMITTER	SEE M-046
A199284	MT-206B TT-206B	MOISTURE AND TEMPERATURE TRANSMITTER	SEE M-046
A199285	FM-207	VENTURI FLOW METER	SEE M-045
A199286	DPT-207A	DIFFERENTIAL PRESSURE TRANSMITTER	PROVIDED WITH FLOWMETER. SEE M-045
A199287	DPT-207B	DIFFERENTIAL PRESSURE TRANSMITTER	PROVIDED WITH FLOWMETER. SEE M-045
A199288		ISOLATION VALVE, PARKER HNV*8FF, GLOBE STYLE BAR STOCK NEEDLE VALVE HNV SERIES OR APPROVED EQUAL	
A199289		BLOCK AND BLEED VALVE, ANDERSON GREENWOOD MODEL M9 OR APPROVED EQUAL	
A199290		PRESSURE GAUGE, ASHCROFT PROCESS PRESSURE GAUGE TYPE 1259, ASME B 40.1 GRADE 2A OR APPROVED EQUAL, +/- 0.5% OF SPAN, PRESSURE RANGE FROM 0 TO 50 PSI	
A199291	PT-208A	PRESSURE TRANSMITTER	SEE M-046
A199292	PT-208B	PRESSURE TRANSMITTER	SEE M-046
A199293		EXPANSION JOINT, SOUTHEASTERN SERVICE COMPANY, FLEXIBLE TUBING CORPORATION, MODEL 75M15214-14 FIG.1 INNER, 75M15214-20 FIG. 2 OUTER OR APPROVED EQUAL	SEE M-022
A199294		EXPANSION JOINT, SOUTHEASTERN SERVICE COMPANY, FLEXIBLE TUBING CORPORATION, MODEL 75M15214-14 FIG.1 INNER, 75M15214-20 FIG. 2 OUTER OR APPROVED EQUAL	SEE-M-022
A199295		EXPANSION JOINT, SOUTHEASTERN SERVICE COMPANY, FLEXIBLE TUBING CORPORATION, MODEL 75M15214-14 FIG.1 INNER, 75M15214-20 FIG. 2 OUTER OR APPROVED EQUAL	SEE-M-022
A199296		EXPANSION JOINT, SOUTHEASTERN SERVICE COMPANY, FLEXIBLE TUBING CORPORATION, MODEL 75M15214-14 FIG.1 INNER, 75M15214-20 FIG. 2 OUTER OR APPROVED EQUAL	SEE-M-022
A199297		ISOLATION VALVE, JAMESBURY METSO AUTOMATION 14" SERIES 815 WITH HANDWHEEL OR APPROVED EQUAL	
A199298	OTS-211A	OVER TEMPERATURE SWITCH	PROVIDED WITH ELECTRIC HEATER. SEE M-046
A199299	OTS-211B	OVER TEMPERATURE SWITCH	PROVIDED WITH ELECTRIC HEATER. SEE M-046
A201357	FCV-213A	FLOW CONTROL VALVE	INCLUDED IN BOILER AND STEAM EQUIPMENT SCHEDULE. SEE M-041 AND M-046
A201358	FCV-213B	FLOW CONTROL VALVE	INCLUDED IN BOILER AND STEAM EQUIPMENT SCHEDULE. SEE M-041 AND M-046
A201355	SOV-214A	SOLENOID VALVE	INCLUDED IN BOILER AND STEAM EQUIPMENT SCHEDULE. SEE M-041 AND M-046
A201356	SOV-214B	SOLENOID VALVE	INCLUDED IN BOILER AND STEAM EQUIPMENT SCHEDULE. SEE M-041 AND M-046
A199304	FCV-215	FLOW CONTROL VALVE	SEE M-045
A199305		DRAIN VALVE, BRAY SERIES 51 BALL VALVE 1", FULL PORT, BRASS BODY, PTFE SEATS, CHROME PLATED BRASS BALL MATERIAL AND NPT THREADED OR APPROVED EQUAL	
A199306	MT-216A TT-216A	MOISTURE AND TEMPERATURE TRANSMITTER	SEE M-046
A199307	MT-216B TT-216B	MOISTURE AND TEMPERATURE TRANSMITTER	SEE M-046
A199308	FM-217	VENTURI FLOW METER	SEE M-045

PURGE AIR SCHEDULE CONTINUED			
A NO.	DEVICE NO.	DESCRIPTION	REMARKS
A199309	DPT-217A	DIFFERENTIAL PRESSURE TRANSMITTER	PROVIDED WITH FLOWMETER. SEE M-045
A199310	DPT-217B	DIFFERENTIAL PRESSURE TRANSMITTER	PROVIDED WITH FLOWMETER. SEE M-045
A199311		ISOLATION VALVE, PARKER HNV*8FF, GLOBE STYLE BAR STOCK NEEDLE VALVE HNV SERIES OR APPROVED EQUAL	
A199312		BLOCK AND BLEED VALVE, ANDERSON GREENWOOD MODEL M9 OR APPROVED EQUAL	
A199313		PRESSURE GAUGE, ASHCROFT PROCESS PRESSURE GAUGE TYPE 1259, ASME B 40.1 GRADE 2A OR APPROVED EQUAL, +/- 0.5% OF SPAN, PRESSURE RANGE FROM 0 TO 50 PSI	
A199314	PT-218A	PRESSURE TRANSMITTER	SEE M-046
A199315	PT-218B	PRESSURE TRANSMITTER	SEE M-046
A199316		EXPANSION JOINT, SOUTHEASTERN SERVICE COMPANY, FLEXIBLE TUBING CORPORATION, MODEL 75M15214-14 FIG.1 INNER, 75M15214-20 FIG. 2 OUTER OR APPROVED EQUAL	SEE M-022
A199317		EXPANSION JOINT, SOUTHEASTERN SERVICE COMPANY, FLEXIBLE TUBING CORPORATION, MODEL 75M15214-14 FIG.1 INNER, 75M15214-20 FIG. 2 OUTER OR APPROVED EQUAL	SEE M-022
A199318		EXPANSION JOINT, SOUTHEASTERN SERVICE COMPANY, FLEXIBLE TUBING CORPORATION, MODEL 75M15214-14 FIG.1 INNER, 75M15214-20 FIG. 2 OUTER OR APPROVED EQUAL	SEE M-022
A199319		EXPANSION JOINT, SOUTHEASTERN SERVICE COMPANY, FLEXIBLE TUBING CORPORATION, MODEL 75M15214-14 FIG.1 INNER, 75M15214-20 FIG. 2 OUTER OR APPROVED EQUAL	SEE M-022
A199320		ISOLATION VALVE, JAMESBURY METSO AUTOMATION 14" SERIES 815 OR APPROVED EQUAL WITH HANDWHEEL	
A199321	OTS-221A	OVER TEMPERATURE SWITCH	PROVIDED WITH ELECTRIC HEATER. SEE M-046
A199322	OTS-221B	OVER TEMPERATURE SWITCH	PROVIDED WITH ELECTRIC HEATER. SEE M-046
A201361	FCV-223A	FLOW CONTROL VALVE	INCLUDED IN BOILER AND STEAM EQUIPMENT SCHEDULE. SEE M-041 AND M-046
A201362	FCV-223B	FLOW CONTROL VALVE	INCLUDED IN BOILER AND STEAM EQUIPMENT SCHEDULE. SEE M-041 AND M-046
A201359	SOV-224A	SOLENOID VALVE	INCLUDED IN BOILER AND STEAM EQUIPMENT SCHEDULE. SEE M-041 AND M-046
A201360	SOV-224B	SOLENOID VALVE	INCLUDED IN BOILER AND STEAM EQUIPMENT SCHEDULE. SEE M-041 AND M-046
A199327	FCV-225	FLOW CONTROL VALVE	SEE M-045
A199328		DRAIN VALVE, BRAY SERIES 51 BALL VALVE 1", FULL PORT, BRASS BODY, PTFE SEATS, CHROME PLATED BRASS BALL MATERIAL AND NPT THREADED OR APPROVED EQUAL	
A199329	MT-226A TT-226A	MOISTURE AND TEMPERATURE TRANSMITTER	SEE M-046
A199330	MT-226B TT-226B	MOISTURE AND TEMPERATURE TRANSMITTER	SEE M-046
A199331	FM-227	VENTURI FLOW METER	SEE M-045
A199332	DPT-227A	DIFFERENTIAL PRESSURE TRANSMITTER	PROVIDED WITH FLOWMETER. SEE M-045
A199333	DPT-227B	DIFFERENTIAL PRESSURE TRANSMITTER	PROVIDED WITH FLOWMETER. SEE M-045
A199334		ISOLATION VALVE, PARKER HNV*8FF, GLOBE STYLE BAR STOCK NEEDLE VALVE HNV SERIES OR APPROVED EQUAL	
A199335		BLOCK AND BLEED VALVE, ANDERSON GREENWOOD MODEL M9 OR APPROVED EQUAL	
A199336		PRESSURE GAUGE, ASHCROFT PROCESS PRESSURE GAUGE TYPE 1259, ASME B 40.1 GRADE 2A OR APPROVED EQUAL, +/- 0.5% OF SPAN, PRESSURE RANGE FROM 0 TO 50 PSI	
A199337	PT-228A	PRESSURE TRANSMITTER	SEE M-046
A199338	PT-228B	PRESSURE TRANSMITTER	SEE M-046
A199339		EXPANSION JOINT, SOUTHEASTERN SERVICE COMPANY, FLEXIBLE TUBING CORPORATION, MODEL 75M15214-14 FIG.1 INNER, 75M15214-20 FIG. 2 OUTER OR APPROVED EQUAL	SEE M-022
A199340		EXPANSION JOINT, SOUTHEASTERN SERVICE COMPANY, FLEXIBLE TUBING CORPORATION, MODEL 75M15214-14 FIG.1 INNER, 75M15214-20 FIG. 2 OUTER OR APPROVED EQUAL	SEE M-022
A199341		EXPANSION JOINT, SOUTHEASTERN SERVICE COMPANY, FLEXIBLE TUBING CORPORATION, MODEL 75M15214-14 FIG.1 INNER, 75M15214-20 FIG. 2 OUTER OR APPROVED EQUAL	SEE M-022
A199342		EXPANSION JOINT, SOUTHEASTERN SERVICE COMPANY, FLEXIBLE TUBING CORPORATION, MODEL 75M15214-14 FIG.1 INNER, 75M15214-20 FIG. 2 OUTER OR APPROVED EQUAL	SEE M-022
A199343		ISOLATION VALVE, JAMESBURY METSO AUTOMATION 10" SERIES 815 OR APPROVED EQUAL WITH LOCKING LEVER HANDLE	
A199344	MOV-240A	MOTORIZED VALVE	SEE M-045
A199345	MOV-240B	MOTORIZED VALVE	SEE M-045
A199346	OTS-241A	OVER TEMPERATURE SWITCH	PROVIDED WITH ELECTRIC HEATER. SEE M-046
A199347	OTS-241B	OVER TEMPERATURE SWITCH	PROVIDED WITH ELECTRIC HEATER. SEE M-046
A199348	FCV-245	FLOW CONTROL VALVE	SEE M-045
A199349		DRAIN VALVE, BRAY SERIES 51 BALL VALVE 1", FULL PORT, BRASS BODY, PTFE SEATS, CHROME PLATED BRASS BALL MATERIAL AND NPT THREADED OR APPROVED EQUAL	
A199350	MT-246A TT-246A	MOISTURE AND TEMPERATURE TRANSMITTER	SEE M-046
A199351	MT-246B TT-246B	MOISTURE AND TEMPERATURE TRANSMITTER	SEE M-046
A199352	FM-247	VENTURI FLOW METER	SEE M-045
A199353	DPT-247A	DIFFERENTIAL PRESSURE TRANSMITTER	PROVIDED WITH FLOWMETER. SEE M-045
A199354	DPT-247B	DIFFERENTIAL PRESSURE TRANSMITTER	PROVIDED WITH FLOWMETER. SEE M-045
A199355		ISOLATION VALVE, PARKER HNV*8FF, GLOBE STYLE BAR STOCK NEEDLE VALVE HNV SERIES OR APPROVED EQUAL	

SYM	ZONE	DESCRIPTION	DATE	APPROVED
REVISIONS				

JACOBS
Jacobs Technology Inc.

SIGNATURES	DATE
DRAWN MIKE VANHOOSE	3/07/14
CHECKED BRIAN GODFREY	3/07/14
SUBMITTED RAVI MUTHIAH	3/07/14
ST OF LICENSURE: FL LICENSE NO: 68076	
APPROVED GLEN WARD	3/07/14
DREW GILLESPIE	3/07/14

NATIONAL AERONAUTICS AND SPACE ADMINISTRATION
JOHN F. KENNEDY SPACE CENTER, NASA
KENNEDY SPACE CENTER, FLORIDA

KSC LAUNCH PAD 39-B
ENVIRONMENTAL CONTROL SYSTEM (ECS) REFURBISHMENT

ECS SYSTEM PURGE AIR EQUIPMENT SCHEDULE

FILE NO.	SIZE	DWG.NO.	REV
	F	79K39602	
PCN. NO. 98898		SHEET 14 OF 187	

M-012

PURGE AIR SCHEDULE CONTINUED			
A NO.	DEVICE NO.	DESCRIPTION	REMARKS
A199356		BLOCK AND BLEED VALVE, ANDERSON GREENWOOD MODEL M9 OR APPROVED EQUAL	
A199357		PRESSURE GAUGE, ASHCROFT PROCESS PRESSURE GAUGE TYPE 1259, ASME B 40.1 GRADE 2A OR APPROVED EQUAL, +/- 0.5% OF SPAN, PRESSURE RANGE FROM 0 TO 50 PSI	
A199358	PT-248A	PRESSURE TRANSMITTER	SEE M-046
A199359	PT-248B	PRESSURE TRANSMITTER	SEE M-046
A199360		EXPANSION JOINT, SOUTHEASTERN SERVICE COMPANY, FLEXIBLE TUBING CORPORATION, MODEL 75M15214-10 FIG.1 INNER, 75M15214-16 FIG. 2 OUTER OR APPROVED EQUAL	SEE M-022
A199361		EXPANSION JOINT, SOUTHEASTERN SERVICE COMPANY, FLEXIBLE TUBING CORPORATION, MODEL 75M15214-10 FIG.1 INNER, 75M15214-16 FIG. 2 OUTER APPROVED EQUAL	SEE M-022
A199362		EXPANSION JOINT, SOUTHEASTERN SERVICE COMPANY, FLEXIBLE TUBING CORPORATION, MODEL 75M15214-10 FIG.1 INNER, 75M15214-16 FIG. 2 OUTER APPROVED EQUAL	SEE M-022
A199363		EXPANSION JOINT, SOUTHEASTERN SERVICE COMPANY, FLEXIBLE TUBING CORPORATION, MODEL 75M15214-10 FIG.1 INNER, 75M15214-16 FIG. 2 OUTER APPROVED EQUAL	SEE M-022
A199364		ISOLATION VALVE, JAMESBURY METSO AUTOMATION 16" SERIES 815 OR APPROVED EQUAL WITH HANDWHEEL	
A199365	OTS-231A	OVER TEMPERATURE SWITCH	PROVIDED WITH ELECTRIC HEATER. SEE M-046
A199366	OTS-231B	OVER TEMPERATURE SWITCH	PROVIDED WITH ELECTRIC HEATER. SEE M-046
A201365	FCV-233A	FLOW CONTROL VALVE	INCLUDED IN BOILER AND STEAM EQUIPMENT SCHEDULE. SEE M-041 AND M-046
A201366	FCV-233B	FLOW CONTROL VALVE	INCLUDED IN BOILER AND STEAM EQUIPMENT SCHEDULE. SEE M-041 AND M-046
A201363	SOV-234A	SOLENOID VALVE	INCLUDED IN BOILER AND STEAM EQUIPMENT SCHEDULE. SEE M-041 AND M-046
A201364	SOV-234B	SOLENOID VALVE	INCLUDED IN BOILER AND STEAM EQUIPMENT SCHEDULE. SEE M-041 AND M-046
A199371	FCV-235	FLOW CONTROL VALVE	SEE M-045
A199372		DRAIN VALVE, BRAY SERIES 51 BALL VALVE 1", FULL PORT, BRASS BODY, PTFE SEATS, CHROME PLATED BRASS BALL MATERIAL AND NPT THREADED OR APPROVED EQUAL	
A199373	MT-236A TT-236A	MOISTURE AND TEMPERATURE TRANSMITTER	SEE M-046
A199374	MT-236B TT-236B	MOISTURE AND TEMPERATURE TRANSMITTER	SEE M-046
A199375	FM-237	VENTURI FLOW METER	SEE M-045
A199376	DPT-237A	DIFFERENTIAL PRESSURE TRANSMITTER	PROVIDED WITH FLOWMETER. SEE M-045
A199377	DPT-237B	DIFFERENTIAL PRESSURE TRANSMITTER	PROVIDED WITH FLOWMETER. SEE M-045
A199378		ISOLATION VALVE, PARKER HNV*8FF, GLOBE STYLE BAR STOCK NEEDLE VALVE HNV SERIES OR APPROVED EQUAL	
A199379		BLOCK AND BLEED VALVE, ANDERSON GREENWOOD MODEL M9 OR APPROVED EQUAL	
A199380		PRESSURE GAUGE, ASHCROFT PROCESS PRESSURE GAUGE TYPE 1259, ASME B 40.1 GRADE 2A OR APPROVED EQUAL, +/- 0.5% OF SPAN, PRESSURE RANGE FROM 0 TO 50 PSI	
A199381	PT-238A	PRESSURE TRANSMITTER	SEE M-046
A199382	PT-238B	PRESSURE TRANSMITTER	SEE M-046
A199383		EXPANSION JOINT, SOUTHEASTERN SERVICE COMPANY, FLEXIBLE TUBING CORPORATION, MODEL 75M15214-16 FIG.1 INNER, 75M15214-22 FIG. 2 OUTER APPROVED EQUAL	SEE M-022
A199384		EXPANSION JOINT, SOUTHEASTERN SERVICE COMPANY, FLEXIBLE TUBING CORPORATION, MODEL 75M15214-16 FIG.1 INNER, 75M15214-22 FIG. 2 OUTER APPROVED EQUAL	SEE M-022
A199385		EXPANSION JOINT, SOUTHEASTERN SERVICE COMPANY, FLEXIBLE TUBING CORPORATION, MODEL 75M15214-16 FIG.1 INNER, 75M15214-22 FIG. 2 OUTER APPROVED EQUAL	SEE M-022
A199386		EXPANSION JOINT, SOUTHEASTERN SERVICE COMPANY, FLEXIBLE TUBING CORPORATION, MODEL 75M15214-16 FIG.1 INNER, 75M15214-22 FIG. 2 OUTER APPROVED EQUAL	SEE M-022
A199387		ISOLATION VALVE, JAMESBURY METSO AUTOMATION 12" SERIES 815 WITH LOCKING LEVER HANDLE OR APPROVED EQUAL	
A199388	OTS-251A	OVER TEMPERATURE SWITCH	PROVIDED WITH ELECTRIC HEATER. SEE M-046
A199389	OTS-251B	OVER TEMPERATURE SWITCH	PROVIDED WITH ELECTRIC HEATER. SEE M-046
A199390	FCV-255	FLOW CONTROL VALVE	SEE M-045
A199391		DRAIN VALVE, BRAY SERIES 51 BALL VALVE 1", FULL PORT, BRASS BODY, PTFE SEATS, CHROME PLATED BRASS BALL MATERIAL AND NPT THREADED OR APPROVED EQUAL	
A199392	MT-256A TT-256A	MOISTURE AND TEMPERATURE TRANSMITTER	SEE M-046
A199393	MT-256B TT-256B	MOISTURE AND TEMPERATURE TRANSMITTER	SEE M-046
A199394	FM-257	VENTURI FLOW METER	SEE M-045
A199395	DPT-257A	DIFFERENTIAL PRESSURE TRANSMITTER	PROVIDED WITH FLOWMETER. SEE M-045
A199396	DPT-257B	DIFFERENTIAL PRESSURE TRANSMITTER	PROVIDED WITH FLOWMETER. SEE M-045
A199397		ISOLATION VALVE, PARKER HNV*8FF, GLOBE STYLE BAR STOCK NEEDLE VALVE HNV SERIES OR APPROVED EQUAL	
A199398		BLOCK AND BLEED VALVE, ANDERSON GREENWOOD MODEL M9 OR APPROVED EQUAL	
A199399		PRESSURE GAUGE, ASHCROFT PROCESS PRESSURE GAUGE TYPE 1259, ASME B 40.1 GRADE 2A OR APPROVED EQUAL, +/- 0.5% OF SPAN, PRESSURE RANGE FROM 0 TO 50 PSI	
A199400	PT-258A	PRESSURE TRANSMITTER	SEE M-046
A199401	PT-258B	PRESSURE TRANSMITTER	SEE M-046

PURGE AIR SCHEDULE CONTINUED			
A NO.	DEVICE NO.	DESCRIPTION	REMARKS
A199402		EXPANSION JOINT, SOUTHEASTERN SERVICE COMPANY, FLEXIBLE TUBING CORPORATION, MODEL 75M15214-12 FIG.1 INNER, 75M15214-18 FIG. 2 OUTER OR APPROVED EQUAL	SEE M-022
A199403		EXPANSION JOINT, SOUTHEASTERN SERVICE COMPANY, FLEXIBLE TUBING CORPORATION, MODEL 75M15214-12 FIG.1 INNER, 75M15214-18 FIG. 2 OUTER OR APPROVED EQUAL	SEE M-022
A199404		EXPANSION JOINT, SOUTHEASTERN SERVICE COMPANY, FLEXIBLE TUBING CORPORATION, MODEL 75M15214-12 FIG.1 INNER, 75M15214-18 FIG. 2 OUTER OR APPROVED EQUAL	SEE M-022
A199405		EXPANSION JOINT, SOUTHEASTERN SERVICE COMPANY, FLEXIBLE TUBING CORPORATION, MODEL 75M15214-12 FIG.1 INNER, 75M15214-18 FIG. 2 OUTER OR APPROVED EQUAL	SEE M-022
A199406		ISOLATION VALVE, JAMESBURY METSO AUTOMATION 12" SERIES 815 WITH LOCKING LEVER HANDLE OR APPROVED EQUAL	
A199407	OTS-261A	OVER TEMPERATURE SWITCH	PROVIDED WITH ELECTRIC HEATER. SEE M-046
A199408	OTS-261B	OVER TEMPERATURE SWITCH	PROVIDED WITH ELECTRIC HEATER. SEE M-046
A199409	FCV-265	FLOW CONTROL VALVE	SEE M-045
A199410		DRAIN VALVE, BRAY SERIES 51 BALL VALVE 1", FULL PORT, BRASS BODY, PTFE SEATS, CHROME PLATED BRASS BALL MATERIAL AND NPT THREADED OR APPROVED EQUAL	
A199411	MT-266A TT-266A	MOISTURE AND TEMPERATURE TRANSMITTER	SEE M-046
A199412	MT-266B TT-266B	MOISTURE AND TEMPERATURE TRANSMITTER	SEE M-046
A199413	FM-267	VENTURI FLOW METER	SEE M-045
A199414	DPT-267A	DIFFERENTIAL PRESSURE TRANSMITTER	PROVIDED WITH FLOWMETER. SEE M-045
A199415	DPT-267B	DIFFERENTIAL PRESSURE TRANSMITTER	PROVIDED WITH FLOWMETER. SEE M-045
A199416		ISOLATION VALVE, PARKER HNV*8FF, GLOBE STYLE BAR STOCK NEEDLE VALVE HNV SERIES OR APPROVED EQUAL	
A199417		BLOCK AND BLEED VALVE, ANDERSON GREENWOOD MODEL M9 OR APPROVED EQUAL	
A199418		PRESSURE GAUGE, ASHCROFT PROCESS PRESSURE GAUGE TYPE 1259, ASME B 40.1 GRADE 2A OR APPROVED EQUAL, +/- 0.5% OF SPAN, PRESSURE RANGE FROM 0 TO 50 PSI	
A199419	PT-268A	PRESSURE TRANSMITTER	SEE M-046
A199420	PT-268B	PRESSURE TRANSMITTER	SEE M-046
A199421		EXPANSION JOINT, SOUTHEASTERN SERVICE COMPANY, FLEXIBLE TUBING CORPORATION, MODEL 75M15214-12 FIG.1 INNER, 75M15214-18 FIG. 2 OUTER OR APPROVED EQUAL	SEE M-022
A199422		EXPANSION JOINT, SOUTHEASTERN SERVICE COMPANY, FLEXIBLE TUBING CORPORATION, MODEL 75M15214-12 FIG.1 INNER, 75M15214-18 FIG. 2 OUTER OR APPROVED EQUAL	SEE M-022
A199423		EXPANSION JOINT, SOUTHEASTERN SERVICE COMPANY, FLEXIBLE TUBING CORPORATION, MODEL 75M15214-12 FIG.1 INNER, 75M15214-18 FIG. 2 OUTER OR APPROVED EQUAL	SEE M-022
A199424		EXPANSION JOINT, SOUTHEASTERN SERVICE COMPANY, FLEXIBLE TUBING CORPORATION, MODEL 75M15214-12 FIG.1 INNER, 75M15214-18 FIG. 2 OUTER OR APPROVED EQUAL	SEE M-022
A199425		ISOLATION VALVE, JAMESBURY METSO AUTOMATION 14" SERIES 815 OR APPROVED EQUAL WITH HANDWHEEL	
A199426	OTS-271A	OVER TEMPERATURE SWITCH	PROVIDED WITH ELECTRIC HEATER. SEE M-046
A199427	OTS-271B	OVER TEMPERATURE SWITCH	PROVIDED WITH ELECTRIC HEATER. SEE M-046
A201373	FCV-273A	FLOW CONTROL VALVE	INCLUDED IN BOILER AND STEAM EQUIPMENT SCHEDULE. SEE M-041 AND M-046
A201374	FCV-273B	FLOW CONTROL VALVE	INCLUDED IN BOILER AND STEAM EQUIPMENT SCHEDULE. SEE M-041 AND M-046
A201371	SOV-274A	SOLENOID VALVE	INCLUDED IN BOILER AND STEAM EQUIPMENT SCHEDULE. SEE M-041 AND M-046
A201372	SOV-274B	SOLENOID VALVE	INCLUDED IN BOILER AND STEAM EQUIPMENT SCHEDULE. SEE M-041 AND M-046
A199432	FCV-275	FLOW CONTROL VALVE	SEE M-045
A199433		DRAIN VALVE, BRAY SERIES 51 BALL VALVE 1", FULL PORT, BRASS BODY, PTFE SEATS, CHROME PLATED BRASS BALL MATERIAL AND NPT THREADED OR APPROVED EQUAL	
A199434	MT-276A TT-276A	MOISTURE AND TEMPERATURE TRANSMITTER	SEE M-046
A199435	MT-276B TT-276B	MOISTURE AND TEMPERATURE TRANSMITTER	SEE M-046
A199436	FM-277	VENTURI FLOW METER	SEE M-045
A199437	DPT-277A	DIFFERENTIAL PRESSURE TRANSMITTER	PROVIDED WITH FLOWMETER. SEE M-045
A199438	DPT-277B	DIFFERENTIAL PRESSURE TRANSMITTER	PROVIDED WITH FLOWMETER. SEE M-045
A199439		ISOLATION VALVE, PARKER HNV*8FF, GLOBE STYLE BAR STOCK NEEDLE VALVE HNV SERIES OR APPROVED EQUAL	
A199440		BLOCK AND BLEED VALVE, ANDERSON GREENWOOD MODEL M9 OR APPROVED EQUAL	
A199441		PRESSURE GAUGE, ASHCROFT PROCESS PRESSURE GAUGE TYPE 1259, ASME B 40.1 GRADE 2A OR APPROVED EQUAL, +/- 0.5% OF SPAN, PRESSURE RANGE FROM 0 TO 50 PSI	
A199442	PT-278A	PRESSURE TRANSMITTER	SEE M-046
A199443	PT-278B	PRESSURE TRANSMITTER	SEE M-046
A199444		EXPANSION JOINT, SOUTHEASTERN SERVICE COMPANY, FLEXIBLE TUBING CORPORATION, MODEL 75M15214-14 FIG.1 INNER, 75M15214-20 FIG. 2 OUTER OR APPROVED EQUAL	SEE M-022
A199445		EXPANSION JOINT, SOUTHEASTERN SERVICE COMPANY, FLEXIBLE TUBING CORPORATION, MODEL 75M15214-14 FIG.1 INNER, 75M15214-20 FIG. 2 OUTER OR APPROVED EQUAL	SEE M-022
A199446		EXPANSION JOINT, SOUTHEASTERN SERVICE COMPANY, FLEXIBLE TUBING CORPORATION, MODEL 75M15214-14 FIG.1 INNER, 75M15214-20 FIG. 2 OUTER OR APPROVED EQUAL	SEE M-022
A199447		EXPANSION JOINT, SOUTHEASTERN SERVICE COMPANY, FLEXIBLE TUBING CORPORATION, MODEL 75M15214-14 FIG.1 INNER, 75M15214-20 FIG. 2 OUTER OR APPROVED EQUAL	SEE M-022

SYM	ZONE	DESCRIPTION	DATE	APPROVED
REVISIONS				

JACOBS
Jacobs Technology Inc.

SIGNATURES		DATE
DRAWN	MIKE VANHOOSE	3/07/14
CHECKED	BRIAN GODFREY	3/07/14
SUBMITTED	RAVI MUTHIAH	3/07/14
ST OF LICENSURE: FL LICENSE NO: 68076		
APPROVED	GLEN WARD	3/07/14
	DREW GILLESPIE	3/07/14

NATIONAL AERONAUTICS AND SPACE ADMINISTRATION
JOHN F. KENNEDY SPACE CENTER, NASA
KENNEDY SPACE CENTER, FLORIDA

KSC LAUNCH PAD 39-B
ENVIRONMENTAL CONTROL SYSTEM (ECS) REFURBISHMENT

ECS SYSTEM PURGE AIR EQUIPMENT SCHEDULE CONTINUED

FILE NO.	SIZE	DWG.NO.	REV
	F	79K39602	
PCN. NO. 98898		SHEET 16 OF 187	

M-013

PURGE AIR SCHEDULE CONTINUED

A NO.	DEVICE NO.	DESCRIPTION	REMARKS
A199448		ISOLATION VALVE, JAMESBURY METSO AUTOMATION 14" SERIES 815 OR APPROVED EQUAL WITH LOCKING LEVER HANDLE	
A199449	OTS-281A	OVER TEMPERATURE SWITCH	PROVIDED WITH ELECTRIC HEATER. SEE M-046
A199450	OTS-281B	OVER TEMPERATURE SWITCH	PROVIDED WITH ELECTRIC HEATER. SEE M-046
A199451	FCV-285	FLOW CONTROL VALVE	SEE M-045
A199452		DRAIN VALVE, BRAY SERIES 51 BALL VALVE 1", FULL PORT, BRASS BODY, PTFE SEATS, CHROME PLATED BRASS BALL MATERIAL AND NPT THREADED OR APPROVED EQUAL	
A199453	MT-286A TT-286A	MOISTURE AND TEMPERATURE TRANSMITTER	SEE M-046
A199454	MT-286B TT-286B	MOISTURE AND TEMPERATURE TRANSMITTER	SEE M-046
A199455	FM-287	VENTURI FLOW METER	SEE M-045
A199456	DPT-287A	DIFFERENTIAL PRESSURE TRANSMITTER	PROVIDED WITH FLOWMETER. SEE M-045
A199457	DPT-287B	DIFFERENTIAL PRESSURE TRANSMITTER	PROVIDED WITH FLOWMETER. SEE M-045
A199458		ISOLATION VALVE, PARKER HNV*8FF, GLOBE STYLE BAR STOCK NEEDLE VALVE HNV SERIES OR APPROVED EQUAL	
A199459		BLOCK AND BLEED VALVE, ANDERSON GREENWOOD MODEL M9 OR APPROVED EQUAL	
A199460		PRESSURE GAUGE, ASHCROFT PROCESS PRESSURE GAUGE TYPE 1259, ASME B 40.1 GRADE 2A OR APPROVED EQUAL, +/- 0.5% OF SPAN, PRESSURE RANGE FROM 0 TO 50 PSI	
A199461	PT-288A	PRESSURE TRANSMITTER	SEE M-046
A199462	PT-288B	PRESSURE TRANSMITTER	SEE M-046
A199463		EXPANSION JOINT, SOUTHEASTERN SERVICE COMPANY, FLEXIBLE TUBING CORPORATION, MODEL 75M15214-14 FIG.1 INNER, 75M15214-20 FIG. 2 OUTER OR APPROVED EQUAL	SEE M-022
A199464		EXPANSION JOINT, SOUTHEASTERN SERVICE COMPANY, FLEXIBLE TUBING CORPORATION, MODEL 75M15214-14 FIG.1 INNER, 75M15214-20 FIG. 2 OUTER OR APPROVED EQUAL	SEE M-022
A199465		EXPANSION JOINT, SOUTHEASTERN SERVICE COMPANY, FLEXIBLE TUBING CORPORATION, MODEL 75M15214-14 FIG.1 INNER, 75M15214-20 FIG. 2 OUTER OR APPROVED EQUAL	SEE M-022
A199466		EXPANSION JOINT, SOUTHEASTERN SERVICE COMPANY, FLEXIBLE TUBING CORPORATION, MODEL 75M15214-14 FIG.1 INNER, 75M15214-20 FIG. 2 OUTER OR APPROVED EQUAL	SEE M-022
A199467		ISOLATION VALVE, JAMESBURY METSO AUTOMATION 14" SERIES 815 OR APPROVED EQUAL WITH HANDWHEEL	
A199468	OTS-291A	OVER TEMPERATURE SWITCH	PROVIDED WITH ELECTRIC HEATER. SEE M-046
A199469	OTS-291B	OVER TEMPERATURE SWITCH	PROVIDED WITH ELECTRIC HEATER. SEE M-046
A199470	FCV-295	FLOW CONTROL VALVE	SEE M-045
A199471		DRAIN VALVE, BRAY SERIES 51 BALL VALVE 1", FULL PORT, BRASS BODY, PTFE SEATS, CHROME PLATED BRASS BALL MATERIAL AND NPT THREADED OR APPROVED EQUAL	
A199472	MT-296A TT-296A	MOISTURE AND TEMPERATURE TRANSMITTER	SEE M-046
A199473	MT-296B TT-296B	MOISTURE AND TEMPERATURE TRANSMITTER	SEE M-046
A199474	FM-297	VENTURI FLOW METER	SEE M-045
A199475	DPT-297A	DIFFERENTIAL PRESSURE TRANSMITTER	PROVIDED WITH FLOWMETER. SEE M-045
A199476	DPT-297B	DIFFERENTIAL PRESSURE TRANSMITTER	PROVIDED WITH FLOWMETER. SEE M-045
A199477		ISOLATION VALVE, PARKER HNV*8FF, GLOBE STYLE BAR STOCK NEEDLE VALVE HNV SERIES OR APPROVED EQUAL	
A199478		BLOCK AND BLEED VALVE, ANDERSON GREENWOOD MODEL M9 OR APPROVED EQUAL	
A199479		PRESSURE GAUGE, ASHCROFT PROCESS PRESSURE GAUGE TYPE 1259, ASME B 40.1 GRADE 2A OR APPROVED EQUAL, +/- 0.5% OF SPAN, PRESSURE RANGE FROM 0 TO 50 PSI	
A199480	PT-298A	PRESSURE TRANSMITTER	SEE M-046
A199481	PT-298B	PRESSURE TRANSMITTER	SEE M-046
A199482		EXPANSION JOINT, SOUTHEASTERN SERVICE COMPANY, FLEXIBLE TUBING CORPORATION, MODEL 75M15214-14 FIG.1 INNER, 75M15214-20 FIG. 2 OUTER OR APPROVED EQUAL	SEE M-022
A199483		EXPANSION JOINT, SOUTHEASTERN SERVICE COMPANY, FLEXIBLE TUBING CORPORATION, MODEL 75M15214-14 FIG.1 INNER, 75M15214-20 FIG. 2 OUTER OR APPROVED EQUAL	SEE M-022
A199484		EXPANSION JOINT, SOUTHEASTERN SERVICE COMPANY, FLEXIBLE TUBING CORPORATION, MODEL 75M15214-14 FIG.1 INNER, 75M15214-20 FIG. 2 OUTER OR APPROVED EQUAL	SEE M-022
A199485		EXPANSION JOINT, SOUTHEASTERN SERVICE COMPANY, FLEXIBLE TUBING CORPORATION, MODEL 75M15214-14 FIG.1 INNER, 75M15214-20 FIG. 2 OUTER OR APPROVED EQUAL	SEE M-022
A201387	HUM-212	HUMIDIFIER	INCLUDED IN BOILER AND STEAM EQUIPMENT SCHEDULE. SEE M-041 AND M-045
A201388	HUM-222	HUMIDIFIER	INCLUDED IN BOILER AND STEAM EQUIPMENT SCHEDULE. SEE M-041 AND M-045
A201389	HUM-232	HUMIDIFIER	INCLUDED IN BOILER AND STEAM EQUIPMENT SCHEDULE. SEE M-041 AND M-045
A201390	HUM-272	HUMIDIFIER	INCLUDED IN BOILER AND STEAM EQUIPMENT SCHEDULE. SEE M-041 AND M-045
A201391	HUM-302	HUMIDIFIER	INCLUDED IN BOILER AND STEAM EQUIPMENT SCHEDULE. SEE M-041 AND M-045
A199491	H-201A	HEATER	SEE M-045
A199492	H-201B	HEATER	SEE M-045
A199493	H-211A	HEATER	SEE M-045
A199494	H-211B	HEATER	SEE M-045
A199495	H-221A	HEATER	SEE M-045
A199496	H-221B	HEATER	SEE M-045
A199497	H-241A	HEATER	SEE M-045
A199498	H-241B	HEATER	SEE M-045
A199499	H-231A	HEATER	SEE M-045
A199500	H-231B	HEATER	SEE M-045
A199501	H-251A	HEATER	SEE M-045

PURGE AIR SCHEDULE CONTINUED

A NO.	DEVICE NO.	DESCRIPTION	REMARKS
A199502	H-251B	HEATER	SEE M-045
A199503	H-261A	HEATER	SEE M-045
A199504	H-261B	HEATER	SEE M-045
A199505	H-271A	HEATER	SEE M-045
A199506	H-271B	HEATER	SEE M-045
A199507	H-281A	HEATER	SEE M-045
A199508	H-281B	HEATER	SEE M-045
A199509	H-291A	HEATER	SEE M-045
A199510	H-291B	HEATER	SEE M-045
A199511	H-301A	HEATER	SEE M-045
A199512	H-301B	HEATER	SEE M-045
A199513	H-311A	HEATER	SEE M-045
A199514	H-311B	HEATER	SEE M-045
A199515		DRAIN VALVE, BRAY SERIES 51 BALL VALVE 1", FULL PORT, BRASS BODY, PTFE SEATS, CHROME PLATED BRASS BALL MATERIAL AND NPT THREADED OR APPROVED EQUAL	
A199516		DRAIN VALVE, BRAY SERIES 51 BALL VALVE 1", FULL PORT, BRASS BODY, PTFE SEATS, CHROME PLATED BRASS BALL MATERIAL AND NPT THREADED OR APPROVED EQUAL	
A199517		DRAIN VALVE, BRAY SERIES 51 BALL VALVE 1", FULL PORT, BRASS BODY, PTFE SEATS, CHROME PLATED BRASS BALL MATERIAL AND NPT THREADED OR APPROVED EQUAL	
A199518	V-016	ISOLATION VALVE, JAMESBURY METSO AUTOMATION 8" SERIES 815 OR APPROVED EQUAL WITH LOCKING LEVER HANDLE	
A199554		ISOLATION VALVE	A6985 TO BE REMOVED. NEW VALVE SUPPLIED WITH BLOWER. SEE M-045.
A199555		FLEXIBLE CONNECTION	A67080 TO BE REMOVED. NEW FLEX CONNECTION TO BE SUPPLIED WITH BLOWER. SEE M-045.
A199556		FLEXIBLE CONNECTION	A67081 TO BE REMOVED. NEW FLEX CONNECTION TO BE SUPPLIED WITH BLOWER. SEE M-045.
A199557		CHECK VALVE	A13463 TO BE REMOVED. NEW CHECK VALVE TO BE SUPPLIED WITH BLOWER. SEE M-045.
A199558		ISOLATION VALVE	A6988 TO BE REMOVED. NEW VALVE SUPPLIED WITH BLOWER. SEE M-045.
A199559		FLEXIBLE CONNECTION	A67088 TO BE REMOVED. NEW FLEX CONNECTION TO BE SUPPLIED WITH BLOWER. SEE M-045.
A199560		FLEXIBLE CONNECTION	A67089 TO BE REMOVED. NEW FLEX CONNECTION TO BE SUPPLIED WITH BLOWER. SEE M-045.
A199561		CHECK VALVE	A13465 TO BE REMOVED. NEW CHECK VALVE TO BE SUPPLIED WITH BLOWER. SEE M-045.
A199562		ISOLATION VALVE	A6987 TO BE REMOVED. NEW VALVE SUPPLIED WITH BLOWER. SEE M-045.
A199563		FLEXIBLE CONNECTION	A67086 TO BE REMOVED. NEW FLEX CONNECTION TO BE SUPPLIED WITH BLOWER. SEE M-045.
A199564		FLEXIBLE CONNECTION	A67087 TO BE REMOVED. NEW FLEX CONNECTION TO BE SUPPLIED WITH BLOWER. SEE M-045.
A199565		CHECK VALVE	A13464 TO BE REMOVED. NEW CHECK VALVE TO BE SUPPLIED WITH BLOWER. SEE M-045.
A201501		FLEXIBLE CONNECTION	A501796 TO BE REMOVED. NEW FLEX CONNECTION TO BE SUPPLIED WITH BLOWER. SEE M-045.
A201502		ISOLATION VALVE	A501778 TO BE REMOVED. NEW VALVE SUPPLIED WITH BLOWER. SEE M-045.
A201503		FLEXIBLE CONNECTION	A501798 TO BE REMOVED. NEW FLEX CONNECTION TO BE SUPPLIED WITH BLOWER. SEE M-045.
A201504		CHECK VALVE	A501782 TO BE REMOVED. NEW CHECK VALVE TO BE SUPPLIED WITH BLOWER. SEE M-045.
A201505		FLEXIBLE CONNECTION	A501795 TO BE REMOVED. NEW FLEX CONNECTION TO BE SUPPLIED WITH BLOWER. SEE M-045.
A201506		ISOLATION VALVE	A501777 TO BE REMOVED. NEW VALVE SUPPLIED WITH BLOWER. SEE M-045.
A201507		FLEXIBLE CONNECTION	A501797 TO BE REMOVED. NEW FLEX CONNECTION TO BE SUPPLIED WITH BLOWER. SEE M-045.
A201508		CHECK VALVE	A501781 TO BE REMOVED. NEW CHECK VALVE TO BE SUPPLIED WITH BLOWER. SEE M-045.
A199237		TEMPERATURE GAUGE, ASHCROFT MODEL NO. 600B-01 DIRECT MOUNTED, 4 1/2" ASME B 40.3 GRADE A, +/-1% OF SPAN, OR APPROVED EQUAL, TEMPERATURE RANGE FROM 0 TO 200 DEG F	
A199238		TEMPERATURE GAUGE, ASHCROFT MODEL NO. 600B-01 DIRECT MOUNTED, 4 1/2" ASME B 40.3 GRADE A, +/-1% OF SPAN, OR APPROVED EQUAL, TEMPERATURE RANGE FROM 0 TO 200 DEG F	
A199300		TEMPERATURE GAUGE, ASHCROFT MODEL NO. 600B-01 DIRECT MOUNTED, 4 1/2" ASME B 40.3 GRADE A, +/-1% OF SPAN, OR APPROVED EQUAL, TEMPERATURE RANGE FROM 0 TO 200 DEG F	
A199301		TEMPERATURE GAUGE, ASHCROFT MODEL NO. 600B-01 DIRECT MOUNTED, 4 1/2" ASME B 40.3 GRADE A, +/-1% OF SPAN, OR APPROVED EQUAL, TEMPERATURE RANGE FROM 0 TO 200 DEG F	
A199302		TEMPERATURE GAUGE, ASHCROFT MODEL NO. 600B-01 DIRECT MOUNTED, 4 1/2" ASME B 40.3 GRADE A, +/-1% OF SPAN, OR APPROVED EQUAL, TEMPERATURE RANGE FROM 0 TO 200 DEG F	
A199303		TEMPERATURE GAUGE, ASHCROFT MODEL NO. 600B-01 DIRECT MOUNTED, 4 1/2" ASME B 40.3 GRADE A, +/-1% OF SPAN, OR APPROVED EQUAL, TEMPERATURE RANGE FROM 0 TO 200 DEG F	
A199323		TEMPERATURE GAUGE, ASHCROFT MODEL NO. 600B-01 DIRECT MOUNTED, 4 1/2" ASME B 40.3 GRADE A, +/-1% OF SPAN, OR APPROVED EQUAL, TEMPERATURE RANGE FROM 0 TO 200 DEG F	
A199324		TEMPERATURE GAUGE, ASHCROFT MODEL NO. 600B-01 DIRECT MOUNTED, 4 1/2" ASME B 40.3 GRADE A, +/-1% OF SPAN, OR APPROVED EQUAL, TEMPERATURE RANGE FROM 0 TO 200 DEG F	
A199325		TEMPERATURE GAUGE, ASHCROFT MODEL NO. 600B-01 DIRECT MOUNTED, 4 1/2" ASME B 40.3 GRADE A, +/-1% OF SPAN, OR APPROVED EQUAL, TEMPERATURE RANGE FROM 0 TO 200 DEG F	
A199326		TEMPERATURE GAUGE, ASHCROFT MODEL NO. 600B-01 DIRECT MOUNTED, 4 1/2" ASME B 40.3 GRADE A, +/-1% OF SPAN, OR APPROVED EQUAL, TEMPERATURE RANGE FROM 0 TO 200 DEG F	
A199488		TEMPERATURE GAUGE, ASHCROFT MODEL NO. 600B-01 DIRECT MOUNTED, 4 1/2" ASME B 40.3 GRADE A, +/-1% OF SPAN, OR APPROVED EQUAL, TEMPERATURE RANGE FROM 0 TO 200 DEG F	
A199489		TEMPERATURE GAUGE, ASHCROFT MODEL NO. 600B-01 DIRECT MOUNTED, 4 1/2" ASME B 40.3 GRADE A, +/-1% OF SPAN, OR APPROVED EQUAL, TEMPERATURE RANGE FROM 0 TO 200 DEG F	
A201513		EXPANSION JOINT, SOUTHEASTERN SERVICE COMPANY, FLEXIBLE TUBING CORPORATION, MODEL 75M15214-14 FIG.1 INNER, 75M15214-20 FIG. 2 OUTER OR APPROVED EQUAL	SEE M-022
A201514		EXPANSION JOINT, SOUTHEASTERN SERVICE COMPANY, FLEXIBLE TUBING CORPORATION, MODEL 75M15214-12 FIG.1 INNER, 75M15214-18 FIG. 2 OUTER OR APPROVED EQUAL	SEE M-022
A201515		EXPANSION JOINT, SOUTHEASTERN SERVICE COMPANY, FLEXIBLE TUBING CORPORATION, MODEL 75M15214-12 FIG.1 INNER, 75M15214-18 FIG. 2 OUTER OR APPROVED EQUAL	SEE M-022
A201516		EXPANSION JOINT, SOUTHEASTERN SERVICE COMPANY, FLEXIBLE TUBING CORPORATION, MODEL 75M15214-16 FIG.1 INNER, 75M15214-22 FIG. 2 OUTER OR APPROVED EQUAL	SEE M-022

SYM	ZONE	DESCRIPTION	DATE	APPROVED
REVISIONS				

JACOBS
Jacobs Technology Inc.

SIGNATURES		DATE
DRAWN	MIKE VANHOOSE	3/07/14
CHECKED	BRIAN GODFREY	3/07/14
SUBMITTED	RAVI MUTHIAH	3/07/14
ST OF LICENSURE: FL LICENSE NO: 68076		
APPROVED	GLEN WARD	3/07/14
	DREW GILLESPIE	3/07/14

NATIONAL AERONAUTICS AND SPACE ADMINISTRATION
JOHN F. KENNEDY SPACE CENTER, NASA
KENNEDY SPACE CENTER, FLORIDA

KSC LAUNCH PAD 39-B
ENVIRONMENTAL CONTROL SYSTEM (ECS) REFURBISHMENT
ECS SYSTEM PURGE AIR EQUIPMENT SCHEDULE CONTINUED

FILE NO.	SIZE	DWG.NO.	REV
	F	79K39602	
PCN. NO. 98898		SHEET 17 OF 187	

M-014

P:\95452\DRAWINGS\PROC\M-014.DWG
20-DEC-2013 12:02
WITHDRWG

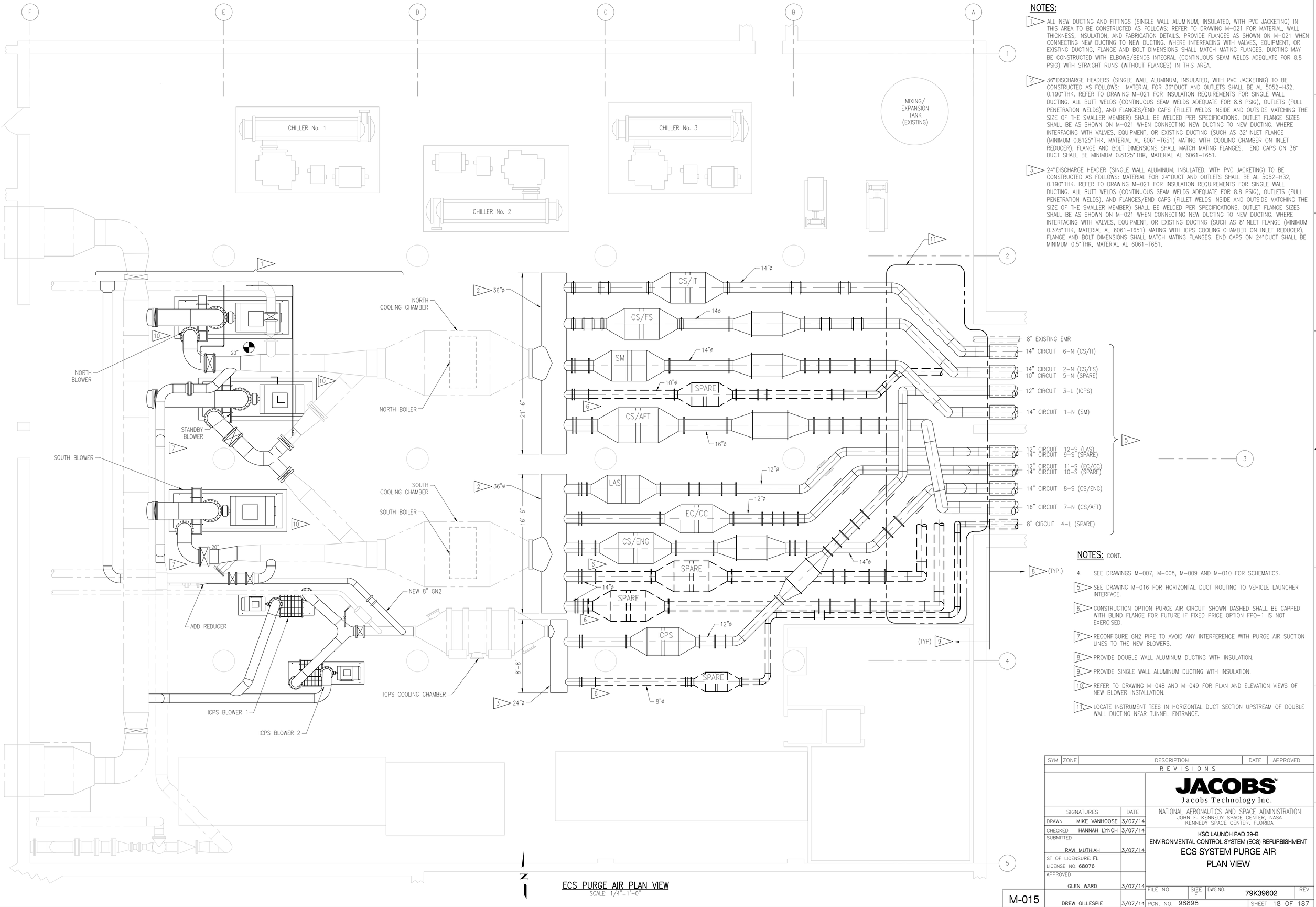

NOTES:

1. ALL NEW DUCTING AND FITTINGS (SINGLE WALL ALUMINUM, INSULATED, WITH PVC JACKETING) IN THIS AREA TO BE CONSTRUCTED AS FOLLOWS: REFER TO DRAWING M-021 FOR MATERIAL, WALL THICKNESS, INSULATION, AND FABRICATION DETAILS. PROVIDE FLANGES AS SHOWN ON M-021 WHEN CONNECTING NEW DUCTING TO NEW DUCTING. WHERE INTERFACING WITH VALVES, EQUIPMENT, OR EXISTING DUCTING, FLANGE AND BOLT DIMENSIONS SHALL MATCH MATING FLANGES. DUCTING MAY BE CONSTRUCTED WITH ELBOWS/BENDS INTEGRAL (CONTINUOUS SEAM WELDS ADEQUATE FOR 8.8 PSIG) WITH STRAIGHT RUNS (WITHOUT FLANGES) IN THIS AREA.
2. 36" DISCHARGE HEADERS (SINGLE WALL ALUMINUM, INSULATED, WITH PVC JACKETING) TO BE CONSTRUCTED AS FOLLOWS: MATERIAL FOR 36" DUCT AND OUTLETS SHALL BE AL 5052-H32, 0.190" THK. REFER TO DRAWING M-021 FOR INSULATION REQUIREMENTS FOR SINGLE WALL DUCTING. ALL BUTT WELDS (CONTINUOUS SEAM WELDS ADEQUATE FOR 8.8 PSIG), OUTLETS (FULL PENETRATION WELDS), AND FLANGES/END CAPS (FILLET WELDS INSIDE AND OUTSIDE MATCHING THE SIZE OF THE SMALLER MEMBER) SHALL BE WELDED PER SPECIFICATIONS. OUTLET FLANGE SIZES SHALL BE AS SHOWN ON M-021 WHEN CONNECTING NEW DUCTING TO NEW DUCTING. WHERE INTERFACING WITH VALVES, EQUIPMENT, OR EXISTING DUCTING (SUCH AS 32" INLET FLANGE (MINIMUM 0.8125" THK, MATERIAL AL 6061-T651) MATING WITH COOLING CHAMBER ON INLET REDUCER), FLANGE AND BOLT DIMENSIONS SHALL MATCH MATING FLANGES. END CAPS ON 36" DUCT SHALL BE MINIMUM 0.8125" THK, MATERIAL AL 6061-T651.
3. 24" DISCHARGE HEADER (SINGLE WALL ALUMINUM, INSULATED, WITH PVC JACKETING) TO BE CONSTRUCTED AS FOLLOWS: MATERIAL FOR 24" DUCT AND OUTLETS SHALL BE AL 5052-H32, 0.190" THK. REFER TO DRAWING M-021 FOR INSULATION REQUIREMENTS FOR SINGLE WALL DUCTING. ALL BUTT WELDS (CONTINUOUS SEAM WELDS ADEQUATE FOR 8.8 PSIG), OUTLETS (FULL PENETRATION WELDS), AND FLANGES/END CAPS (FILLET WELDS INSIDE AND OUTSIDE MATCHING THE SIZE OF THE SMALLER MEMBER) SHALL BE WELDED PER SPECIFICATIONS. OUTLET FLANGE SIZES SHALL BE AS SHOWN ON M-021 WHEN CONNECTING NEW DUCTING TO NEW DUCTING. WHERE INTERFACING WITH VALVES, EQUIPMENT, OR EXISTING DUCTING (SUCH AS 8" INLET FLANGE (MINIMUM 0.375" THK, MATERIAL AL 6061-T651) MATING WITH ICPS COOLING CHAMBER ON INLET REDUCER), FLANGE AND BOLT DIMENSIONS SHALL MATCH MATING FLANGES. END CAPS ON 24" DUCT SHALL BE MINIMUM 0.5" THK, MATERIAL AL 6061-T651.

NOTES: CONT.

4. SEE DRAWINGS M-007, M-008, M-009 AND M-010 FOR SCHEMATICS.
5. SEE DRAWING M-016 FOR HORIZONTAL DUCT ROUTING TO VEHICLE LAUNCHER INTERFACE.
6. CONSTRUCTION OPTION PURGE AIR CIRCUIT SHOWN DASHED SHALL BE CAPPED WITH BLIND FLANGE FOR FUTURE IF FIXED PRICE OPTION FPO-1 IS NOT EXERCISED.
7. RECONFIGURE GN2 PIPE TO AVOID ANY INTERFERENCE WITH PURGE AIR SUCTION LINES TO THE NEW BLOWERS.
8. PROVIDE DOUBLE WALL ALUMINUM DUCTING WITH INSULATION.
9. PROVIDE SINGLE WALL ALUMINUM DUCTING WITH INSULATION.
10. REFER TO DRAWING M-048 AND M-049 FOR PLAN AND ELEVATION VIEWS OF NEW BLOWER INSTALLATION.
11. LOCATE INSTRUMENT TEES IN HORIZONTAL DUCT SECTION UPSTREAM OF DOUBLE WALL DUCTING NEAR TUNNEL ENTRANCE.

ECS PURGE AIR PLAN VIEW

SCALE: 1/4"=1'-0"

SYM	ZONE	DESCRIPTION	DATE	APPROVED
REVISIONS				

SIGNATURES		DATE
DRAWN	MIKE VANHOOSE	3/07/14
CHECKED	HANNAH LYNCH	3/07/14
SUBMITTED	RAVI MUTHIAH	3/07/14
ST OF LICENSURE: FL LICENSE NO: 68076		
APPROVED	GLEN WARD	3/07/14
	DREW GILLESPIE	3/07/14

JACOBS™
Jacobs Technology Inc.

NATIONAL AERONAUTICS AND SPACE ADMINISTRATION
JOHN F. KENNEDY SPACE CENTER, NASA
KENNEDY SPACE CENTER, FLORIDA

KSC LAUNCH PAD 39-B
ENVIRONMENTAL CONTROL SYSTEM (ECS) REFURBISHMENT
ECS SYSTEM PURGE AIR
PLAN VIEW

M-015

FILE NO.	SIZE	DWG.NO.	REV
	F	79K39602	
PCN. NO. 98898		SHEET 18 OF 187	

P:\95452\DRAWINGS\PROC\M-015.DWG
28-JAN-2014 08:52
HARDYDR

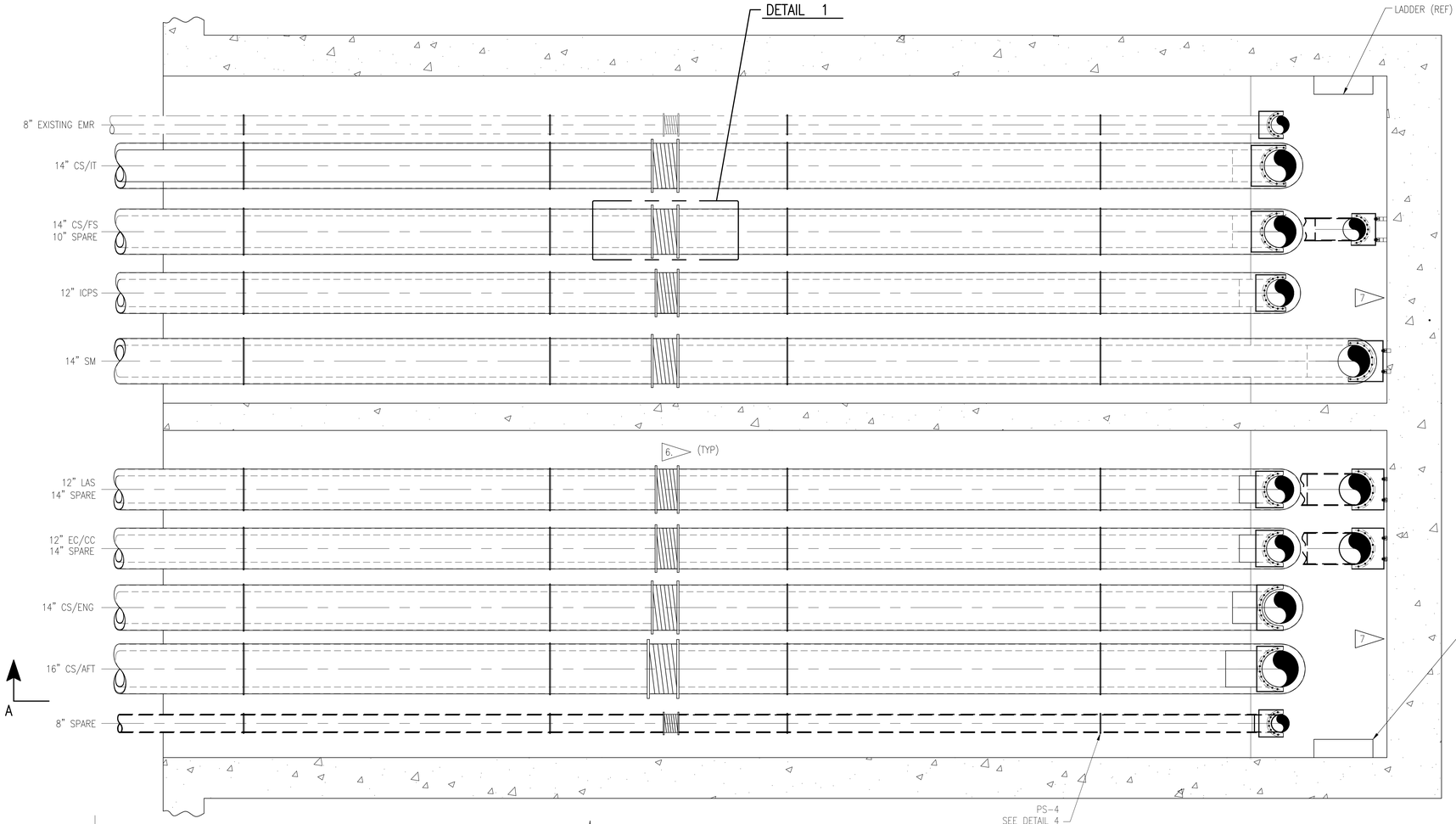

ECS TUNNEL HORIZONTAL PLAN VIEW
SCALE: 1/2"=1'-0"

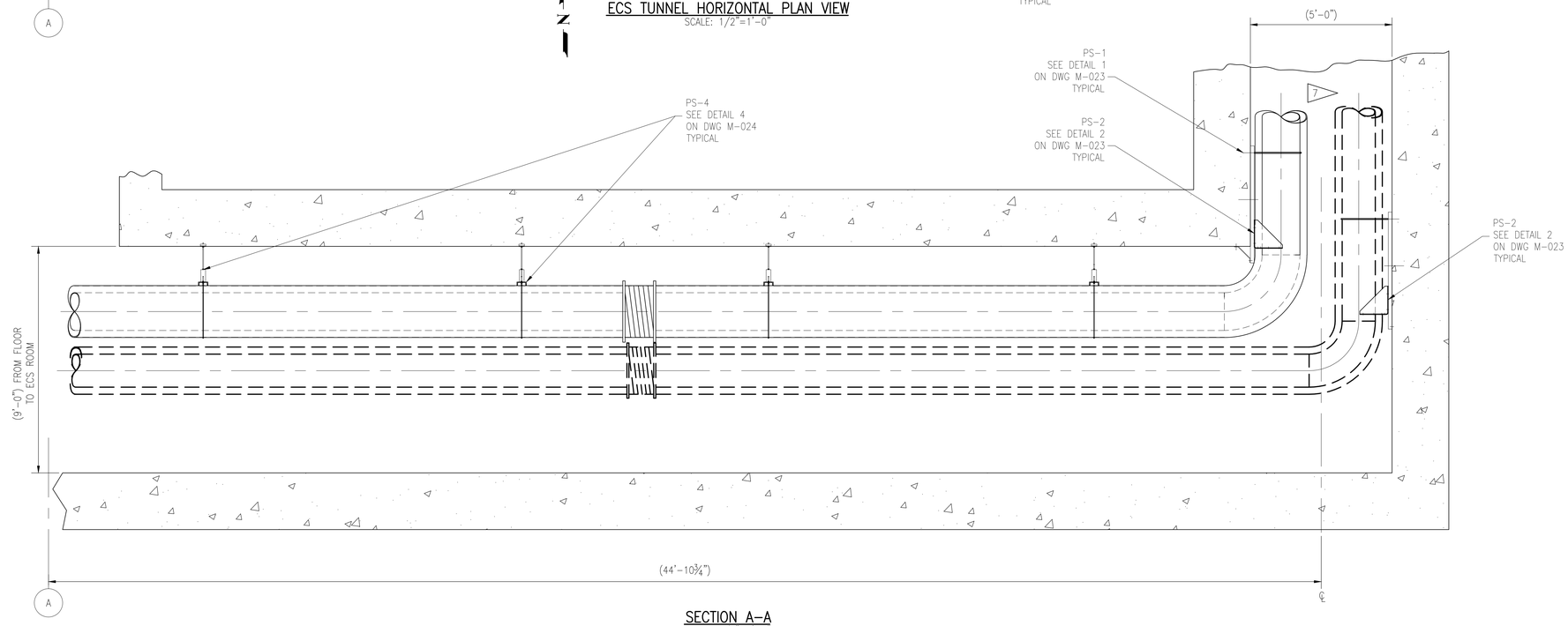

SECTION A-A
SCALE: 1/2"=1'-0"

NOTES:

1. ALL DUCTING IN ECS HORIZONTAL TUNNEL IS DOUBLE WALL ALUMINUM DUCTING WITH INSULATION.
2. NOT USED.
3. NOT USED.
4. SEE DRAWINGS M-007, M-008, M-009 AND M-010 FOR SCHEMATICS.
5. SEE DRAWING M-015 FOR PLAN VIEW OF PURGE AIR DUCTING.
6. PROVIDE AND INSTALL NEW EXPANSION JOINTS ON THE HORIZONTAL DUCTS.
7. SEE DRAWING M-017 FOR CONTINUATION.
8. PROVIDE EVEN SPACING BETWEEN PURGE AIR CIRCUITS.
9. BLANKET INSULATION SHALL BE SUPERWOOL 607 HT, 8 LBS/FT^3 OR APPROVED EQUAL.

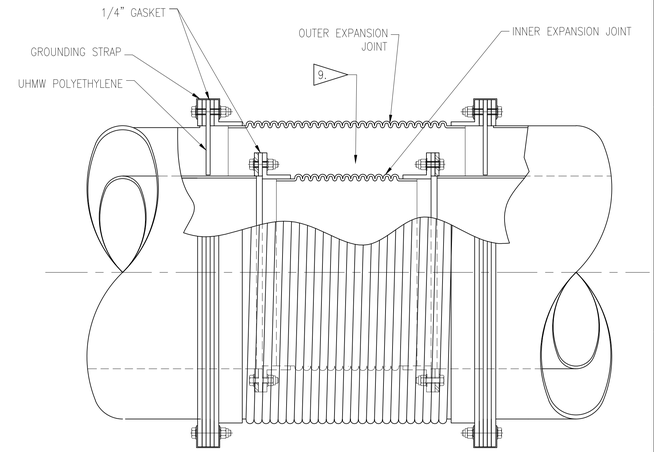

TYPICAL EXPANSION JOINT INSTALLATION DETAIL
DETAIL 1
SCALE: NTS

SYM	ZONE	DESCRIPTION	DATE	APPROVED
REVISIONS				

SIGNATURES		DATE
DRAWN	MIKE VANHOOSE	3/07/14
CHECKED	HANNAH LYNCH	3/07/14
SUBMITTED	RAVI MUTHIAH	3/07/14
ST OF LICENSURE: FL LICENSE NO: 68076		
APPROVED	GLEN WARD	3/07/14
	DREW GILLESPIE	3/07/14

JACOBS
Jacobs Technology Inc.

NATIONAL AERONAUTICS AND SPACE ADMINISTRATION
JOHN F. KENNEDY SPACE CENTER, NASA
KENNEDY SPACE CENTER, FLORIDA

KSC LAUNCH PAD 39-B
ENVIRONMENTAL CONTROL SYSTEM (ECS) REFURBISHMENT
ECS SYSTEM PURGE AIR
HORIZONTAL TUNNEL
ELEVATION

M-016

FILE NO.	SIZE	DWG.NO.	REV
	F	79K39602	

PCN. NO. 98898 SHEET 19 OF 187

P:\95452\DRAWINGS\PROC\M-016.DWG 20-DEC-2013 09:10 HARDY/DR

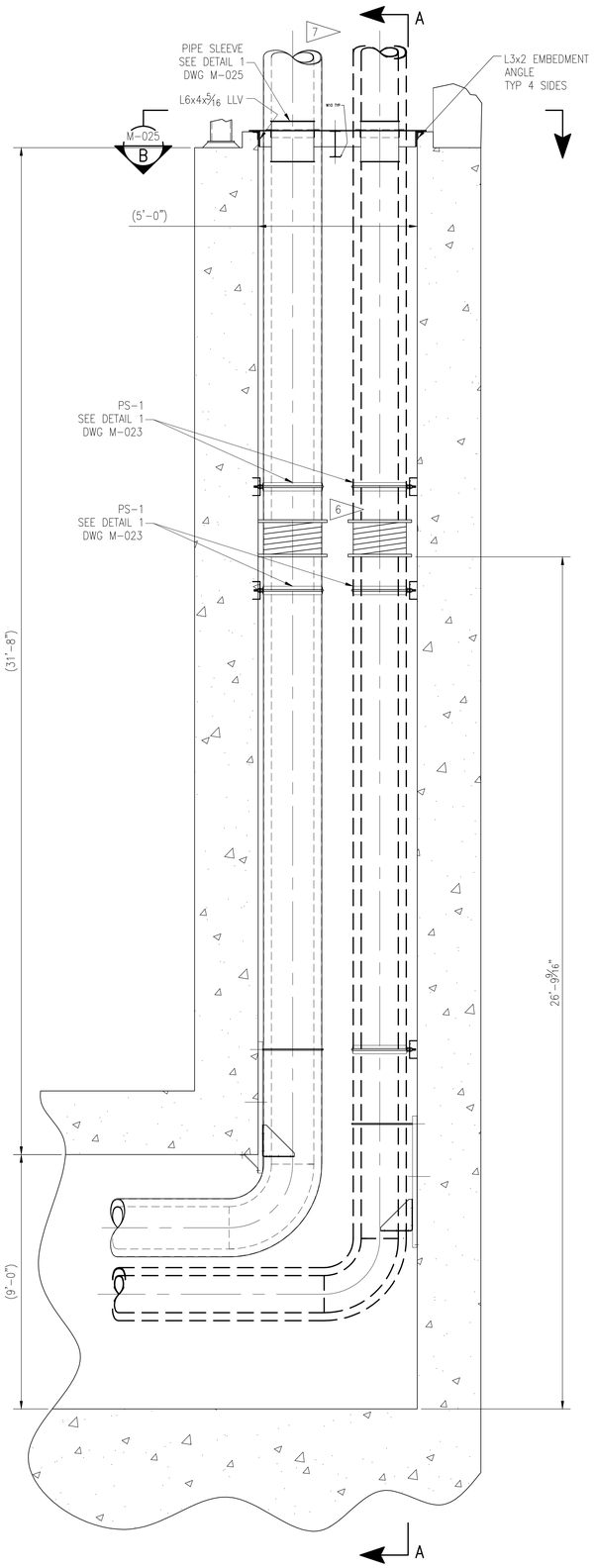

ECS VERTICAL TUNNEL ELEVATION
SCALE: 1/2"=1'-0"

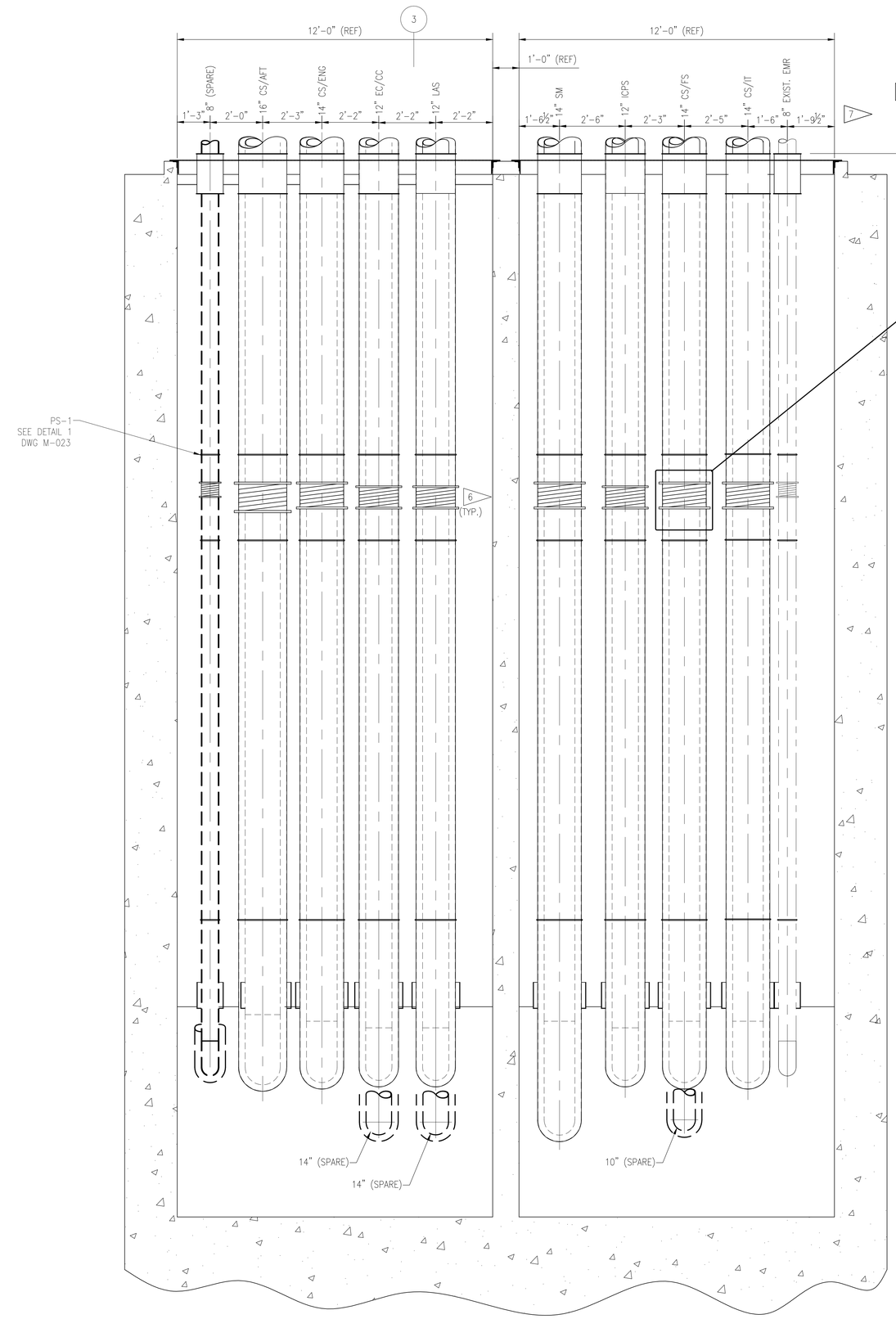

SECTION A-A
SCALE: 1/2"=1'-0"

NOTES:

1. ALL DUCTING IN ECS VERTICAL TUNNEL IS DOUBLE WALL ALUMINUM DUCTING WITH INSULATION.
2. ALL DUCTING ABOVE THIS POINT IS DOUBLE WALL STAINLESS STEEL CONSTRUCTION.
3. NOT USED.
4. SEE DRAWING M-007, M-008, M-009, AND M-010 FOR SCHEMATICS.
5. SEE DRAWING M-015 FOR PLAN VIEW OF PURGE AIR DUCTING.
6. PROVIDE AND INSTALL NEW EXPANSION JOINTS ON THE VERTICAL DUCTS.
7. SEE DRAWING M-018 FOR CONTINUATION.
8. PROVIDE EVEN SPACING BETWEEN PURGE AIR CIRCUITS.
9. BLANKET INSULATION SHALL BE SUPERWOOL 607 HT, 8 LBS/FT^3 OR APPROVED EQUAL.

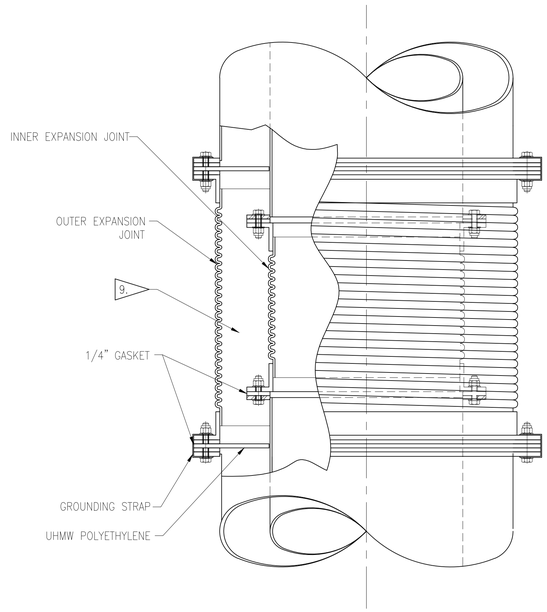

TYPICAL EXPANSION JOINT INSTALLATION DETAIL
DETAIL 1
SCALE: NTS

SYM	ZONE	DESCRIPTION	DATE	APPROVED
REVISIONS				

JACOBS
Jacobs Technology Inc.

SIGNATURES		DATE
DRAWN	MIKE VANHOOSE	3/07/14
CHECKED	HANNAH LYNCH	3/07/14
SUBMITTED	RAVI MUTHIAH	3/07/14
ST OF LICENSURE: FL LICENSE NO: 68076		
APPROVED	GLEN WARD	3/07/14
	DREW GILLESPIE	3/07/14

NATIONAL AERONAUTICS AND SPACE ADMINISTRATION
JOHN F. KENNEDY SPACE CENTER, NASA
KENNEDY SPACE CENTER, FLORIDA

KSC LAUNCH PAD 39-B
ENVIRONMENTAL CONTROL SYSTEM (ECS) REFURBISHMENT
ECS SYSTEM PURGE AIR
VERTICAL TUNNEL
ELEVATION

M-017

FILE NO.	SIZE F	DWG.NO.	REV
		79K39602	
PCN. NO. 98898		SHEET 20 OF 187	

P:\95452\DRAWINGS\PROC\M-017.DWG
19-DEC-2013 16:36
HARDYDR

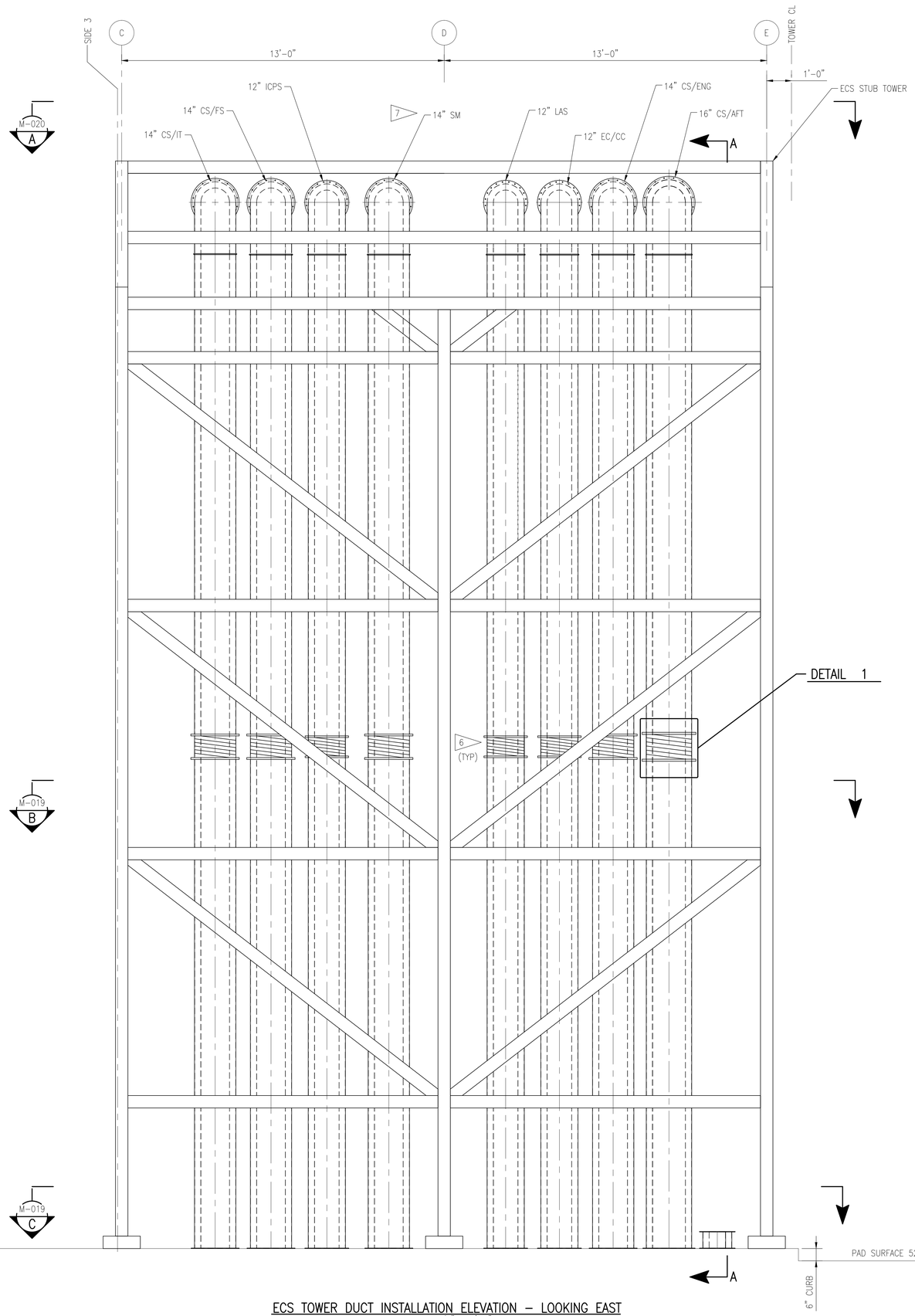

ECS TOWER DUCT INSTALLATION ELEVATION – LOOKING EAST
SCALE: 1/2" = 1'-0"

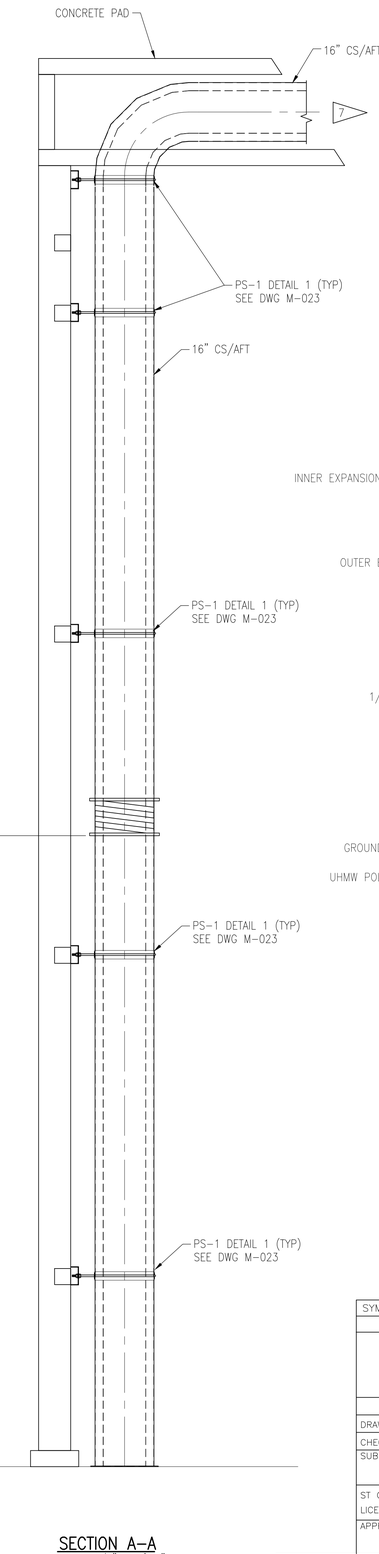

SECTION A–A
SCALE: 1/2" = 1'-0"

NOTES:

1. NOT USED.
2. NOT USED.
3. NOT USED.
4. SEE DRAWING M-007, M-008, M-009, AND M-010 FOR SCHEMATICS.
5. SEE DRAWING M-015 FOR PLAN VIEW OF PURGE AIR DUCTING.
6. PROVIDE AND INSTALL NEW EXPANSION JOINTS ON THE VERTICAL DUCTS.
7. SEE DRAWING M-020 FOR CONTINUATION.
8. PROVIDE EVEN SPACING BETWEEN PURGE AIR CIRCUITS.
9. BLANKET INSULATION SHALL BE SUPERWOOL 607 HT, 8 LBS/FT^3 OR APPROVED EQUAL.

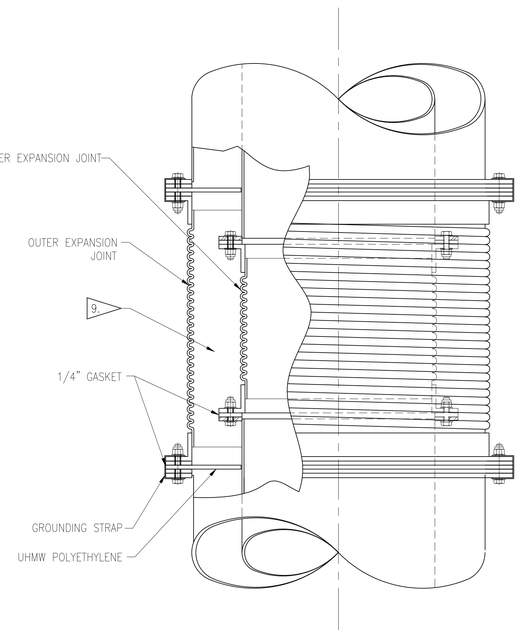

TYPICAL EXPANSION JOINT INSTALLATION DETAIL
DETAIL 1
SCALE: NTS

SYM	ZONE	DESCRIPTION	DATE	APPROVED
		REVISIONS		

SIGNATURES		DATE
DRAWN	MIKE VANHOOSE	3/07/14
CHECKED	HANNAH LYNCH	3/07/14
SUBMITTED	RAVI MUTHIAH	3/07/14
ST OF LICENSURE: FL LICENSE NO: 68076		
APPROVED	GLEN WARD	3/07/14
	DREW GILLESPIE	3/07/14

JACOBS
Jacobs Technology Inc.

NATIONAL AERONAUTICS AND SPACE ADMINISTRATION
JOHN F. KENNEDY SPACE CENTER, NASA
KENNEDY SPACE CENTER, FLORIDA

KSC LAUNCH PAD 39-B
ENVIRONMENTAL CONTROL SYSTEM (ECS) REFURBISHMENT
ECS SYSTEM PURGE AIR
STUB TOWER ELEVATION

M-018

FILE NO.	SIZE	DWG.NO.	REV
	F	79K39602	
PCN. NO. 98898		SHEET 21 OF 187	

P:\95452\DRAWINGS\PROC\M-018.DWG
19-DEC-2013 16:33
HARDYDR

NOTES:

1. SEE DRAWING M-007, M-008, M-009, AND M-010 FOR SCHEMATICS.
2. SEE DRAWING M-015 FOR PLAN VIEW OF PURGE AIR DUCTING.

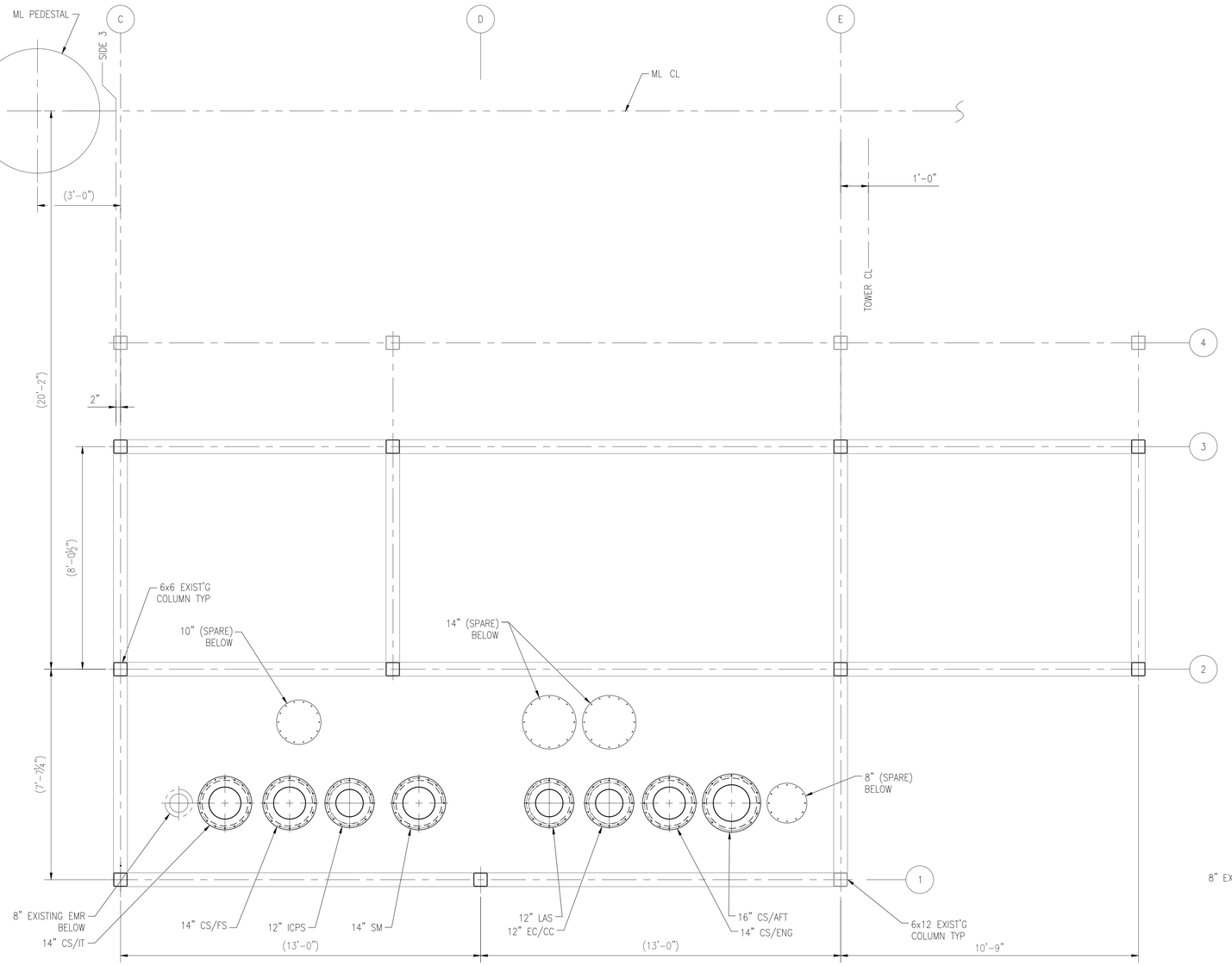

N

SECTION B
SCALE: 1/2" = 1'-0"
M-018

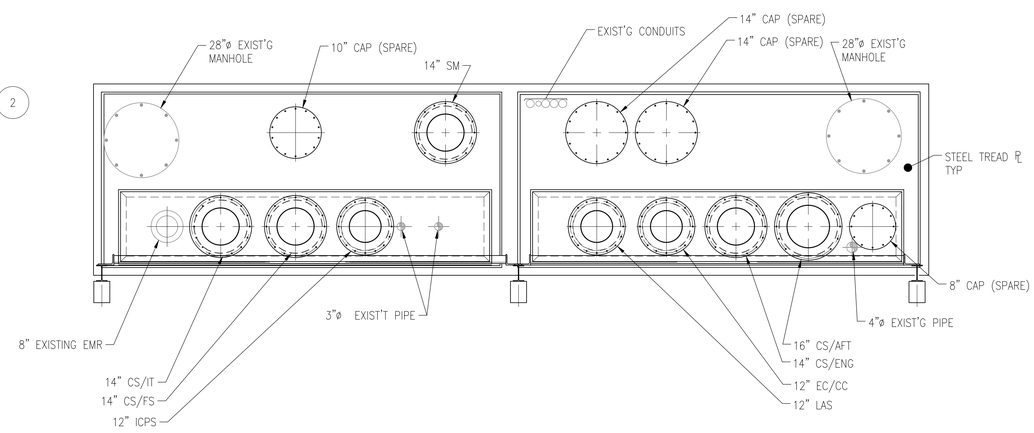

SECTION C
SCALE: 1/2"=1'-0"
M-018

SYM	ZONE	DESCRIPTION	DATE	APPROVED
		REVISIONS		

JACOBS
Jacobs Technology Inc.

SIGNATURES		DATE
DRAWN	MIKE VANHOOSE	3/07/14
CHECKED	HANNAH LYNCH	3/07/14
SUBMITTED	RAVI MUTHIAH	3/07/14
ST OF LICENSURE: FL LICENSE NO: 68076		
APPROVED	GLEN WARD	3/07/14
	DREW GILLESPIE	3/07/14

NATIONAL AERONAUTICS AND SPACE ADMINISTRATION
JOHN F. KENNEDY SPACE CENTER, NASA
KENNEDY SPACE CENTER, FLORIDA

KSC LAUNCH PAD 39-B
ENVIRONMENTAL CONTROL SYSTEM (ECS) REFURBISHMENT

ECS SYSTEM PURGE AIR
STUB TOWER SECTIONS

M-019

FILE NO.	SIZE	DWG.NO.	REV
	F	79K39602	

PCN. NO. 98898 SHEET 22 OF 187

P:\39452\DRAWINGS\PROC\M-019.DWG 20-DEC-2013 09:28 HARDYDR

NOTES:

1. ALL DUCT WALL, FLANGES AND ACCESSORIES SHALL BE TYPE 316L STAINLESS STEEL.
2. REFER TO SPECIFICATIONS FOR PRESSURE TESTING REQUIREMENTS FOR DUCTS AND ELBOWS.
3. PROVIDE AND INSTALL NEW EXPANSION JOINTS AS SHOWN.
4. BLANKET INSULATION SHALL BE SUPERWOOL 607 HT, 8 LBS/FT^3 OR APPROVED EQUAL.
5. FLEX DUCT PROVIDED AND INSTALLED BY OTHERS.

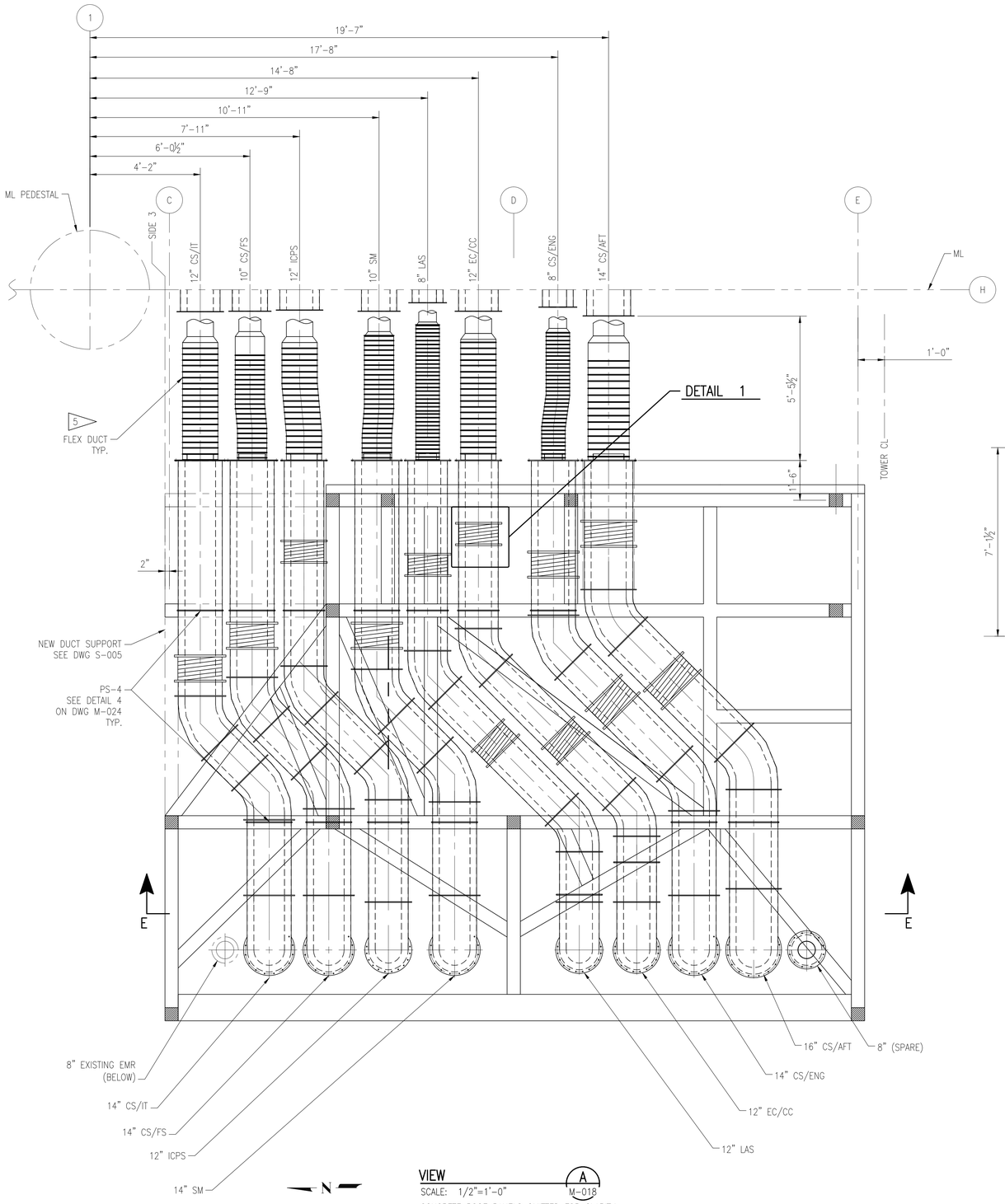

VIEW A
SCALE: 1/2"=1'-0" M-018
CONCRETE ROOF PANELS OMITTED FOR CLARITY

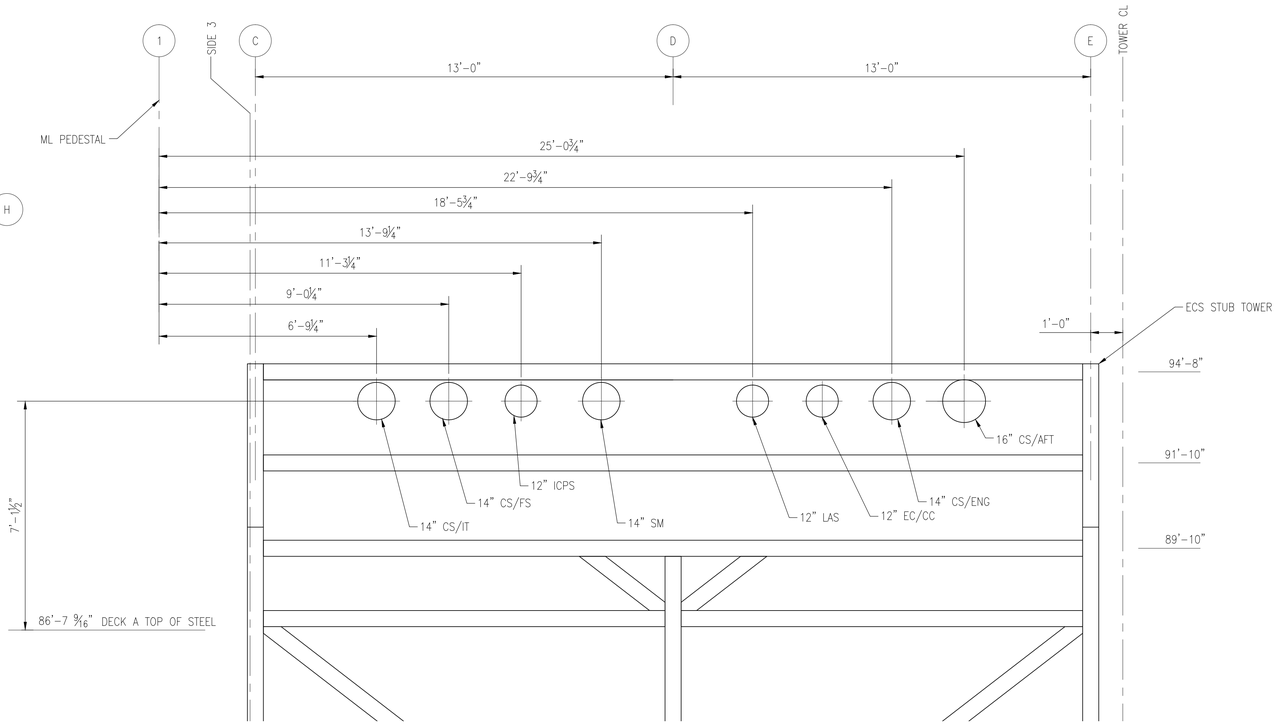

SECTION E-E
SCALE: 1/2"=1'-0"

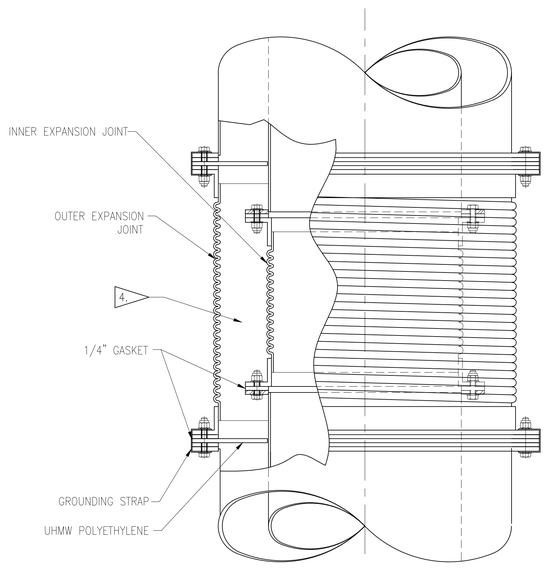

TYPICAL EXPANSION JOINT INSTALLATION DETAIL
DETAIL 1
SCALE: NTS

SYM	ZONE	DESCRIPTION	DATE	APPROVED
REVISIONS				

JACOBS™
Jacobs Technology Inc.

SIGNATURES		DATE
DRAWN	MIKE VANHOOSE	3/07/14
CHECKED	HANNAH LYNCH	3/07/14
SUBMITTED	RAVI MUTHIAH	3/07/14
ST OF LICENSURE: FL LICENSE NO: 68076		
APPROVED	GLEN WARD	3/07/14
	DREW GILLESPIE	3/07/14

NATIONAL AERONAUTICS AND SPACE ADMINISTRATION
JOHN F. KENNEDY SPACE CENTER, NASA
KENNEDY SPACE CENTER, FLORIDA

KSC LAUNCH PAD 39-B
ENVIRONMENTAL CONTROL SYSTEM (ECS) REFURBISHMENT
ECS SYSTEM PURGE AIR
STUB TOWER SECTIONS
CONTINUED

M-020

FILE NO. | SIZE F | DWG.NO. 79K39602 | REV
PCN. NO. 98898 | SHEET 23 OF 187

F:\39452\DRAWINGS\PROC\M-020.DWG
20-DEC-2013 13:55
TOWNSEJH

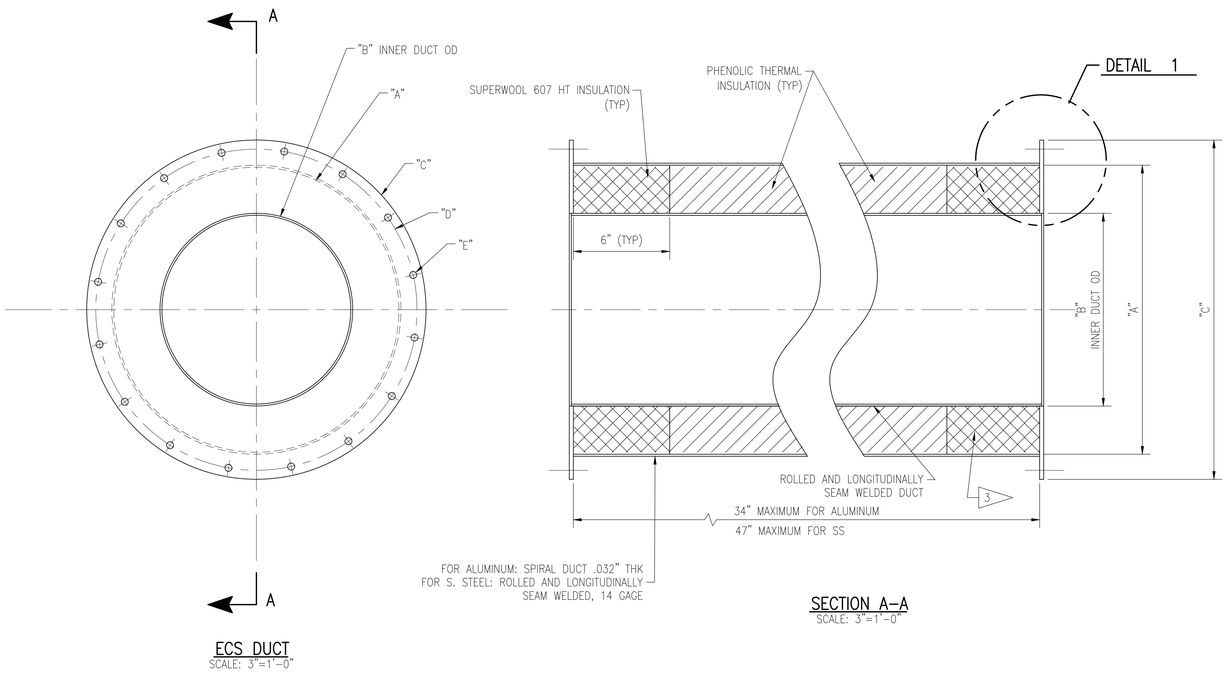

ECS DUCT
SCALE: 3"=1'-0"

SECTION A-A
SCALE: 3"=1'-0"

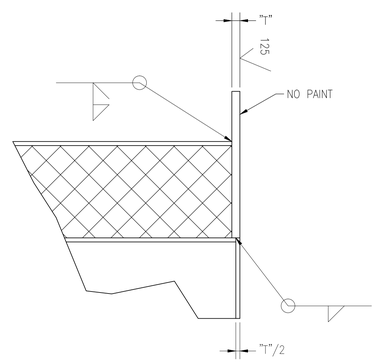

DETAIL 1
SCALE: 6"=1'-0"
(TYPICAL ALL DOUBLE WALL DUCT AND ELBOW FLANGES U.O.S.)

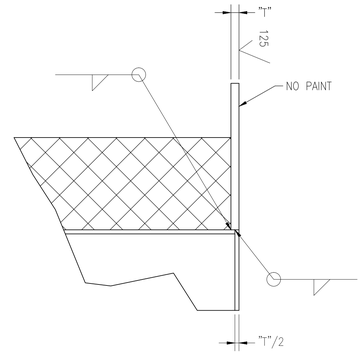

DETAIL 2
SCALE: 6"=1'-0"
(TYPICAL ALL SINGLE WALL DUCT FLANGES)

NOTES:

1. ALL STAINLESS STEEL DUCT WALLS, FLANGES AND ACCESSORIES SHALL BE TYPE 316L STAINLESS STEEL. ALL ALUMINUM DUCT WALLS SHALL BE AL 5052-H32, FLANGES AND ACCESSRORIES SHALL BE AL 6061-T6 OR 6061-T651. DUCTING IS STAINLESS AND ALUMINUM AS INDICATED ON ROUTING DRAWINGS.
2. REFER TO SPECIFICATIONS FOR PRESSURE TESTING REQUIREMENTS FOR DUCTS AND ELBOWS.
3. PROVIDE 6" SUPERWOOL 607 HT (OR APPROVED EQUAL) INSULATION AT FLANGES OF THE ECS DUCTS. FILL REMAINDER OF ECS DUCT WITH KOOLPHEN (OR APPROVED EQUAL) PHENOLIC FOAM INSULATION.
4. MAXIMUM THERMAL CONDUCTIVITY OF SUPERWOOL OR EQUAL INSULATION SHALL NOT EXCEED 0.24 BTU-IN/HOUR-SQFT-°F @ 400°F.
5. MAXIMUM THERMAL CONDUCTIVITY OF KOOLPHEN-K PHENOLIC OR EQUAL INSTALLATION SHALL NOT EXCEED 0.13 BTU-IN/HOUR-SQFT-°F.
6. FLANGE FACES SHALL BE PARALLEL WITHIN $\frac{1}{16}$".
7. DUCTWORK LENGTH DIMENSIONS SHALL BE WITHIN ± $\frac{1}{8}$" U.O.S.
8. CLOCKING OF FLANGES ON BOTH ENDS OF DUCT SECTIONS OR FITTINGS SHALL BE IDENTICAL WITHIN ± .5°.
9. FILLET AND BEVEL WELDS SHALL BE EQUAL TO THE THICKNESS OF THE SHEET METAL BEING WELDED UOS.
10. ALL FLANGES DIMENSIONS (OD, ID, BOLT HOLE POSITION) SHALL BE WITHIN ± $\frac{1}{16}$".
11. POSITION, DIAMETER, BOLT CIRCLE, AND QUANTITY OF FASTENER HOLES SHALL MATCH MATING FLANGE.
12. FASTENERS
    - HEX CAP SCREWS SHALL BE PER ASME B18.2.1; MATERIAL SHALL BE PER ASTM F593, 316 SST.
    - FLEXLOC NUTS SHALL BE PER ASTM F593, 304 SST.
    - FLAT WASHERS SHALL BE PER ASME B18.22.1, TYPE B REGULAR THICKNESS, 316 SST.

INNER DUCT SIZE OD (IN)	OUTER DUCT SIZE ID "A" (IN)	FLANGE BORE DIA "B" (IN)	FLANGE OD "C" (IN)	BOLT CIRCLE DIA "D" (IN)	BOLT HOLE DIA "E" (IN)	NUMBER OF BOLT HOLES (STRADDLE ℄)	MATERIAL INNER & OUTER DUCTS SS GAGE	MATERIAL SS MINIMUM FLANGE THK "T" (IN)	MATERIAL AL INNER DUCT THK (IN)	MATERIAL AL OUTER DUCT THK (IN)	MATERIAL AL MINIMUM FLANGE THK "T" (IN)	FASTENER SIZE	DRY TORQUE, FT-LB
20	–	20	29.125	28	0.438	20	–	–	0.190	–	0.625	⅜-16	20
16	22	16	25.125	24	0.438	16	14	0.438	0.125	0.032 SPIRAL	0.562	⅜-16	20
14	20	14	23.125	22	0.438	16	14	0.438	0.100	0.032 SPIRAL	0.500	⅜-16	20
12	18	12	21.125	20	0.438	16	14	0.375	0.080	0.032 SPIRAL	0.438	⅜-16	20
10	16	10	19.125	18	0.438	16	14	0.375	0.063	0.032 SPIRAL	0.438	⅜-16	20
8	14	8	17.125	16	0.438	12	14	0.312	0.050	0.032 SPIRAL	0.375	⅜-16	20

DUCT EXPANSION JOINT FLANGES

INNER FLANGE OD "C2" (IN)	INNER FLANGE BOLT CIRCLE DIA "D2" (IN)	INNER FLANGE NUMBER OF BOLT HOLES	MATERIAL SS FLANGE MIN THK "T2" (IN)	MATERIAL AL FLANGE MIN THK "T2" (IN)	DRY TORQUE, FT-LB
–	–	–	–	–	–
19.125	18	16	0.312	0.375	20
17.125	16	12	0.312	0.312	20
15.125	14	12	0.25	0.312	20
12.875	11.688	12	0.25	0.25	20
10.375	9.438	8	0.25	0.25	20

TYPICAL SINGLE WALL ALUMINUM DUCT DETAIL
SCALE: 3"=1'-0"

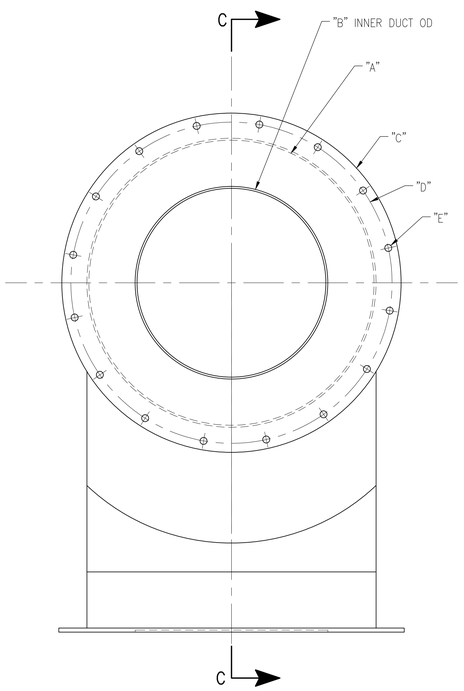

ECS ELBOW
SCALE: 3"=1'-0"

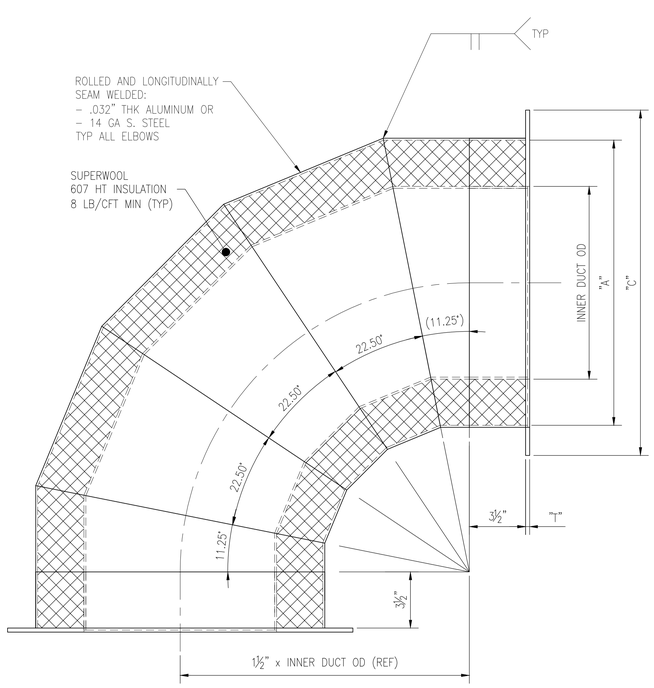

TYPICAL 90° ELBOW DETAIL
SECTION C-C
SCALE: 3"=1'-0"

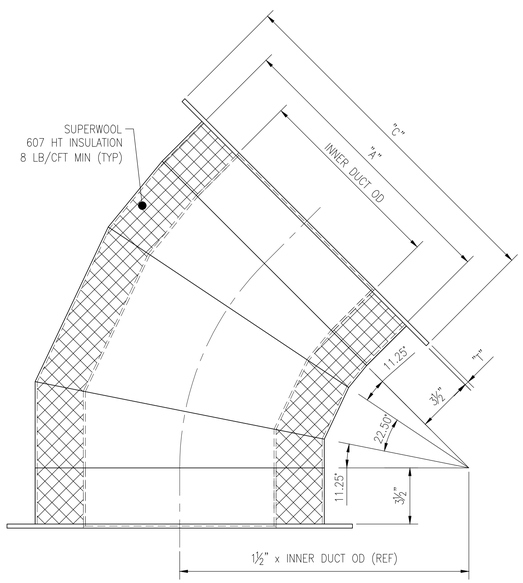

TYPICAL 45° ELBOW DETAIL
SCALE: 3"=1'-0"

SYM	ZONE	DESCRIPTION	DATE	APPROVED
		REVISIONS		

JACOBS
Jacobs Technology Inc.

SIGNATURES		DATE
DRAWN	MIKE VANHOOSE	3/07/14
CHECKED	HANNAH LYNCH	3/07/14
SUBMITTED	RAVI MUTHIAH	3/07/14
ST OF LICENSURE: FL LICENSE NO: 68076		
APPROVED	GLEN WARD	3/07/14
	DREW GILLESPIE	3/07/14

NATIONAL AERONAUTICS AND SPACE ADMINISTRATION
JOHN F. KENNEDY SPACE CENTER, NASA
KENNEDY SPACE CENTER, FLORIDA

KSC LAUNCH PAD 39-B
ENVIRONMENTAL CONTROL SYSTEM (ECS) REFURBISHMENT
ECS SYSTEM PURGE AIR
SECTIONS, DETAILS AND ISOMETRIC

M-021

FILE NO. | SIZE F | DWG.NO. 79K39602 | REV
PCN. NO. 98898 | SHEET 24 OF 187

P:\GS452\DRAWINGS\PROC\M-021.DWG
07-FEB-2014 15:09
RHEALE

FLEX ADAPTOR SCHEDULE							
PURGE CIRCUIT	INNER DUCT SIZE OD (IN.)	ADAPTOR OD "B" (IN.)	FLANGE OUTSIDE DIA. "C" (IN.)	BOLT CIRCLE DIA. "D" (IN.)	BOLT HOLE DIA. "E" (IN.)	NUMBER OF BOLT HOLES	MATERIAL SS GAGE
CS/IT	14	12.00	23.125	22	0.438	16	14
CS/FS	14	10.00	23.125	22	0.438	16	14
ICPS	12	12.00	21.125	20	0.438	16	14
SM	14	10.00	23.125	22	0.438	16	14
LAS	12	8.00	21.125	20	0.438	16	14
EC/CC	12	12.00	21.125	20	0.438	16	14
CS/ENG	14	8.00	23.125	22	0.438	16	14
CS/AFT	16	14.00	25.125	24	0.438	16	14

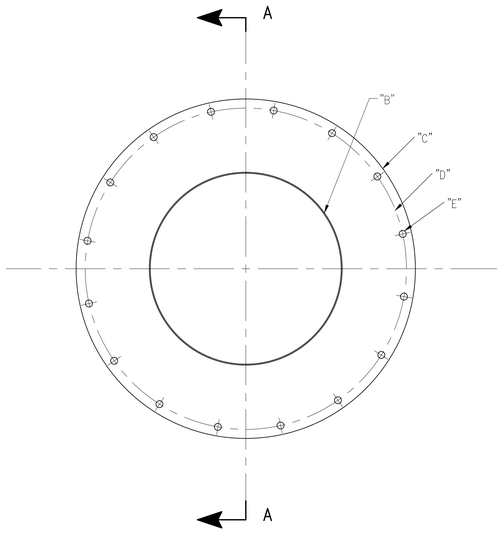

FLEX ADAPTOR
SCALE: NTS

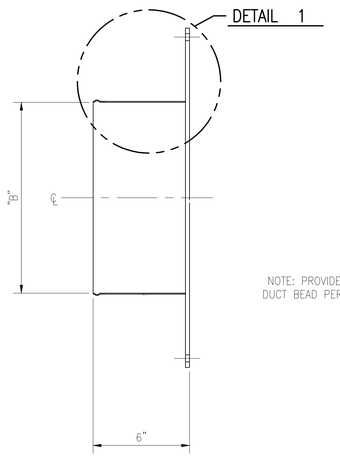

SECTION A–A
SCALE: NTS

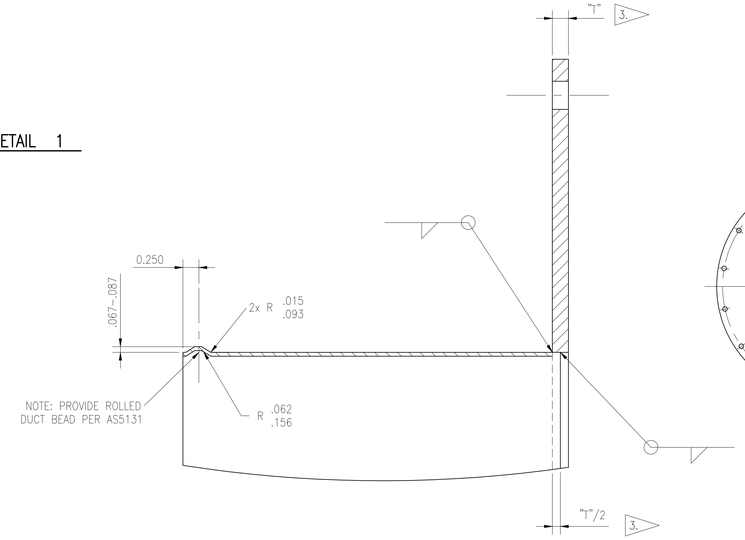

DETAIL 1
SCALE: 12"=1'–0"

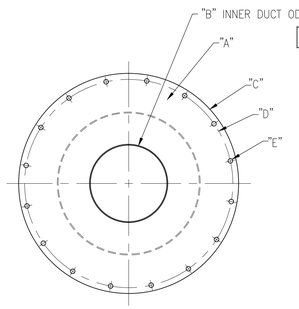

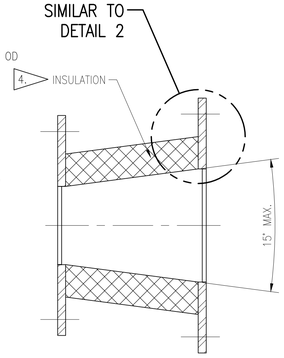

TYPICAL REDUCER DUCT 7.
SCALE: 3"=1'–0"

NOTES:

1. 1" x 20 GAGE (NOMINAL) FLANGE GROUNDING STRAP TYPE 316 SS OR AL 6061 TO MATCH FLANGE MATERIAL.
2. GASKET SHALL BE NEW, ¼" THK, 40 DUROMETER POLY–CHLOROPRENE AND CONFORM TO ASME B.16.21 AND MIL–PRF–6855/1. CLASS 2, TYPE A. GASKETS SHALL BE CONTINUOUS WITHOUT GAP.
3. SEE DRAWING M–021 FOR NOTES AND TABLE.
4. BLANKET INSULATION SHALL BE SUPERWOOL 607 HT, 8 LBS/FT^3 OR APPROVED EQUAL.
5. BONDING AND GROUNDING:
   - SELECT ONE ACCESSIBLE BOLT FOR BONDING AND PREPARE SURFACES UNDER BOLT, WASHERS AND NUT AS FOLLOWS. PRIOR TO BONDING, ALL MATERIAL SURFACES SHALL BE THOROUGHLY PREPARED TO REMOVE ALL CONTAMINANTS SUCH AS: DIRT, PAINT, OXIDES, NONCONDUCTIVE FILMS, OR OTHER FOREIGN MATTER TO EXPOSE BASE METAL TO PERMIT MAXIMUM CONDUCTIVITY. PREPARED SURFACES SHALL BE JOINED WITHIN 30 MINUTES TO AVOID CONTAMINATION.
   - AFTER FINAL ASSEMBLY THE DIRECT CURRENT RESISTANCE ACROSS ALL JOINTS SHALL BE 2.5 MILLIOHMS OR LESS WHEN TESTED USING A 4 TERMINAL MILLIOHM METER.
   - DUCTS SHALL BE GROUNDED AT EACH END AS A MINIMUM WITH #6 FLEXIBLE COPPER WIRE OR BRAID. DUCTS 200 FEET LONG OR LONGER SHALL BE GROUNDED EVERY 100 FEET.
   - THE SERIES RESISTANCE OF THE PIPING, TUBING, AND DUCT JOINTS SHALL NOT EXCEED A TOTAL OF 30 MILLIOHMS FROM EARTH GROUNDING SYSTEM TO EARTH GROUND.
6. SEE SPECIFICATION FOR MATERIAL AND PERFORMANCE REQUIREMENTS FOR EXPANSION JOINTS.
7. FABRICATE REDUCER DUCTS AS REQUIRED TO ADAPT DUCT TO VALVES OR OTHER COMPONENTS. MATERIALS AND DIMENSIONS TO MATCH TABLE SHOWN ON DRAWING M–021, FLANGES SHALL MATCH DUCTS AND COMPONENTS.

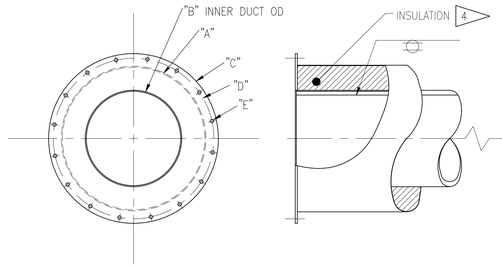

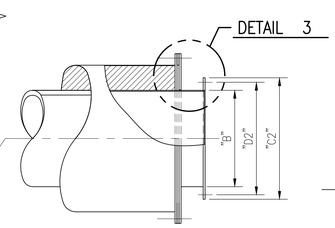

TYPICAL SPOOL – EXPANSION JOINT END DETAIL
SCALE: 3"=1'–0"

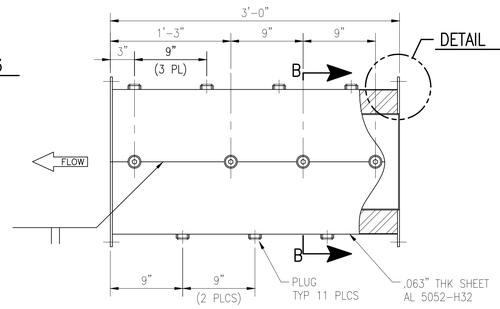

TYPICAL INSTRUMENT TEE DETAIL
SCALE: 1 1/2"=1'–0"

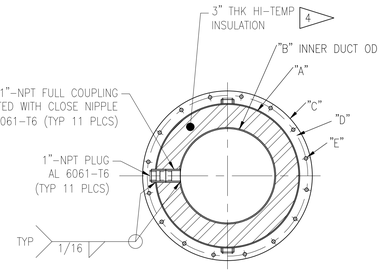

SECTION B–B
SCALE: 1 1/2"=1'–0"

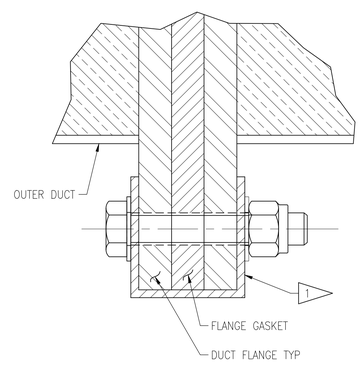

TYPICAL FLANGE GROUNDING STRAP DETAIL
SCALE: NTS

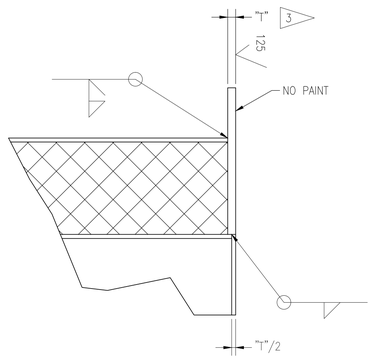

DETAIL 2
SCALE: 6"=1'–0"
(TYPICAL ALL DOUBLE WALL DUCT FLANGES U.O.S.)

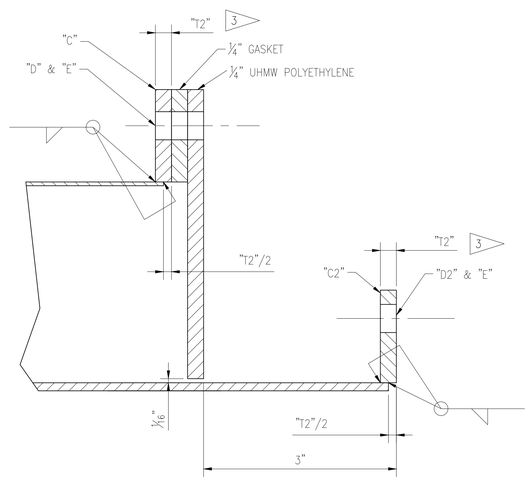

DETAIL 3
SCALE: 12"=1'–0"

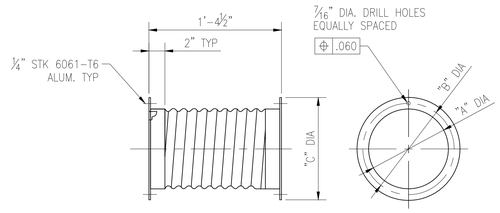

FIG. 2 OUTER EXPANSION JOINT 6
SCALE: 1 1/2"=1'–0"

OUTER EXPANSION JOINTS				
DASH NO.	"A" DIA (IN)	"B" DIA (IN)	"C" DIA (IN.)	NUMBER OF BOLT HOLES
–14	14	16	17.125	12
–16	16	18	19.125	16
–18	18	20	21.125	16
–20	20	22	23.125	16
–22	22	24	25.125	20

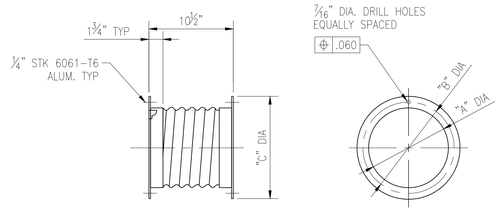

FIG. 1 INNER EXPANSION JOINT 6
SCALE: 1 1/2"=1'–0"

INNER EXPANSION JOINTS				
DASH NO.	"A" DIA (IN)	"B" DIA (IN)	"C" DIA (IN.)	NUMBER OF BOLT HOLES
–8	8	9.438	10.375	8
–10	10	11.688	12.875	12
–12	12	14	15.125	12
–14	14	16	17.125	12
–16	16	18	19.125	16

SYM	ZONE	DESCRIPTION	DATE	APPROVED
REVISIONS				

JACOBS
Jacobs Technology Inc.

SIGNATURES		DATE
DRAWN	MIKE VANHOOSE	3/07/14
CHECKED	HANNAH LYNCH	3/07/14
SUBMITTED	RAVI MUTHIAH	3/07/14
ST OF LICENSURE: FL LICENSE NO: 68076		
APPROVED	GLEN WARD	3/07/14
	DREW GILLESPIE	3/07/14

NATIONAL AERONAUTICS AND SPACE ADMINISTRATION
JOHN F. KENNEDY SPACE CENTER, NASA
KENNEDY SPACE CENTER, FLORIDA

KSC LAUNCH PAD 39-B
ENVIRONMENTAL CONTROL SYSTEM (ECS) REFURBISHMENT

ECS SYSTEM PURGE AIR
SECTIONS, DETAILS AND ISOMETRIC
CONTINUED

FILE NO.	SIZE	DWG.NO.	REV
	F	79K39602	
PCN. NO. 98898		SHEET 25 OF 187	

M-022

P:\05452\DRAWINGS\PROC\M-022.DWG
07-FEB-2014 14:48
RHEAJE

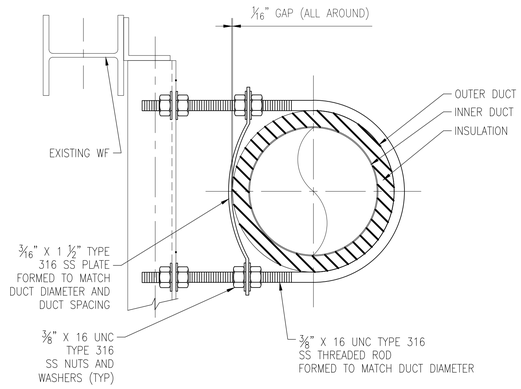

SECTION A–A
SCALE: NTS

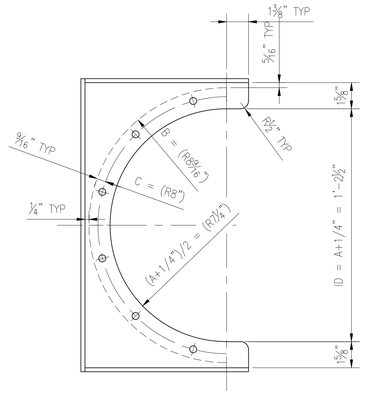

8" DUCT ANCHOR
SCALE: 3"=1'-0"
SEE SCHEDULE FOR OTHER SIZES

DUCT ANCHOR SCHEDULE					
INNER DUCT SIZE (IN.)	NORMAL OUTER DUCT SIZE "A" (IN.)	FLANGE OUTSIDE DIA. "B" (IN.)	BOLT CIRCLE DIA. "C" (IN.)	BOLT HOLE DIA. "E" (IN.)
8	14	17.125	16	0.4375
10	16	19.125	18	0.4375
12	18	21.125	20	0.4375
14	20	23.125	22	0.4375
16	22	25.125	24	0.4375

NOTE: SEE TABLE ON DRAWING M-021 TO MATCH NUMBER OF BOLT HOLES TO DUCT FLANGE SIZE.

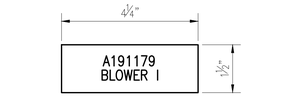

TYPICAL COMPONENT LABEL 1
SCALE: NONE

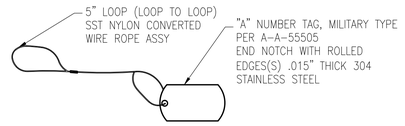

TYPICAL "A" NUMBER TAG 2
SCALE: NONE

NOTES:

1. ENGRAVE COMPONENT LABEL PER KSC-STD-E-0015 LOCATED ON COMPONENT USING DOUBLE STITCH TAPE NOMENCLATURE SIZE SHALL BE 1/4" AND LOCATION SHALL BE APPROXIMATELY AS SHOWN. USER APPROPRIATE FONT BLACK CHARACTERS ON WHITE BACKGROUND REFER TO COMPONENT LABELING TABLE FOR 'A' NUMBER AND NOMENCLATURE FOR EACH LABEL.
2. ALL COMPONENTS WITH AN ASSIGNED "A" NUMBER IN THE SYSTEM SCHEMATIC SHALL HAVE THE "A" NUMBER AND DRAWING NUMBER STAMPED OR ENGRAVED ONTO ITEM TAG. LETTERS SHALL BE 1/8" HIGH AND MARKING SHALL BE IN ACCORDANCE WITH KSC-STD-E-0015. TAGS SHALL BE ATTACHED TO THEIR RESPECTIVE COMPONENTS WITH SAFETY WIRE AND SWAGING SLEEVES.
3. CASING SHALL BE BUILT AROUND THE HUMIDIFIER TO ALLOW IT FOR EASY REMOVAL AND INSTALLATION.
4. BACK PRESSURE DAMPER ASSEMBLY SHALL BE PROVIDED TO INSTALL AT THE PURGE AIR EXIT TO TEST AND BALANCE THE PURGE AIR.
5. REFER TO SPECIFICATION FOR MATERIAL AND PERFORMANCE REQUIREMENTS FOR DUST CAPS. REFER TO FLEX ADAPTOR SCHEDULE ON DRAWING M-022 FOR "B" DIMENSION SHOWN IN DUST CAP SCHEDULE.
6. IF FIXED PRICE OPTION FPO-2 IS EXERCISED CONSTRUCTION OPTION DUCTS SHALL BE PROVIDED WITH DUST CAPS AND BACK PRESSURE DAMPERS.

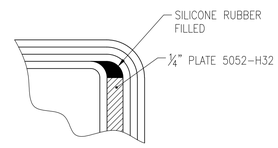

DETAIL 3
SCALE: 4X

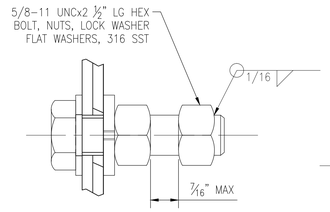

DETAIL 2
SCALE: FULL

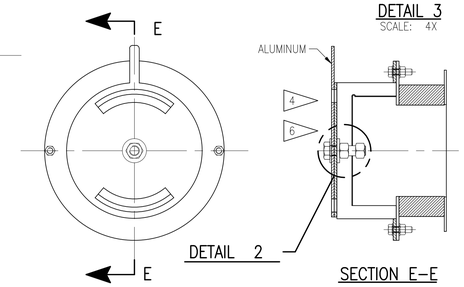

TYPICAL BACK PRESSURE DAMPER ASSEMBLY DETAIL
SCALE: 3"=1'-0"

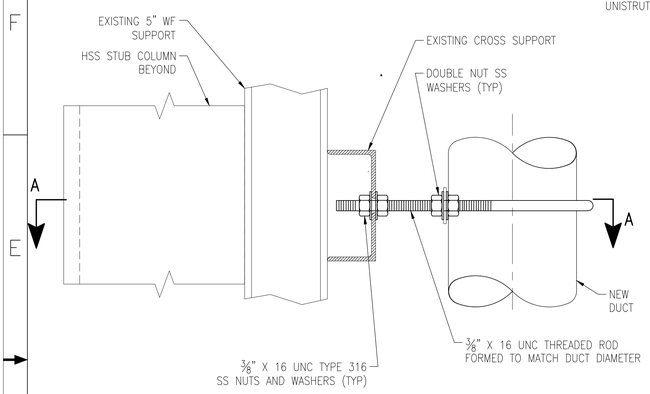

TYPICAL DUCT SUPPORT PS-1 DETAIL 1
SCALE: NTS

NOTE: ALL THREADED FASTENERS INSTALLATION SHALL COMPLY WITH MSFC-STD-486

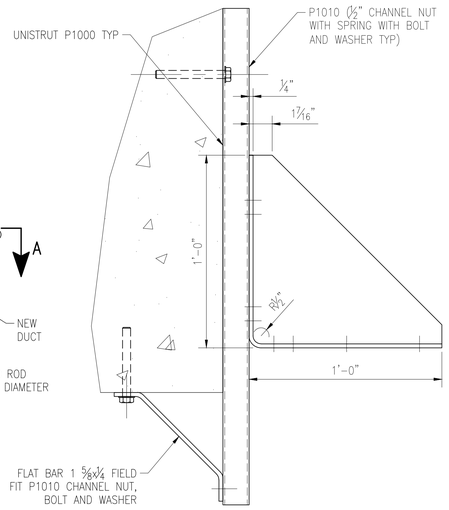

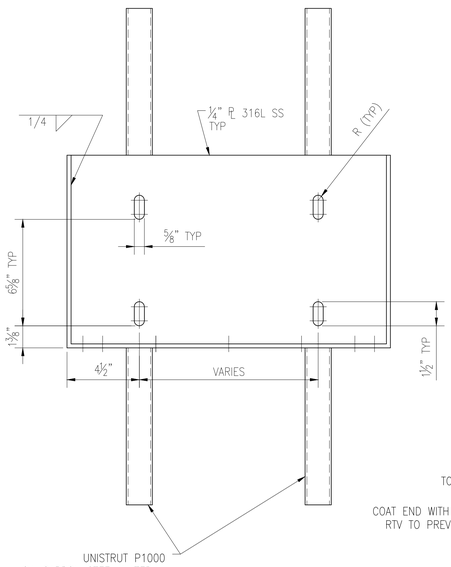

TYPICAL DUCT SUPPORT PS-2 DETAIL 2
SCALE: 3"=1'-0"

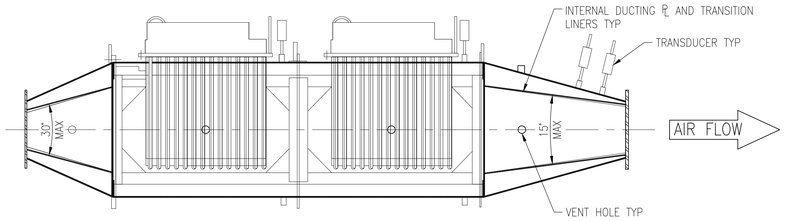

SECTION B–B
SCALE: NONE

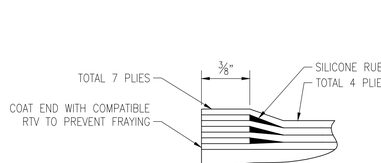

BEAD – DETAIL 1
SCALE: 4X

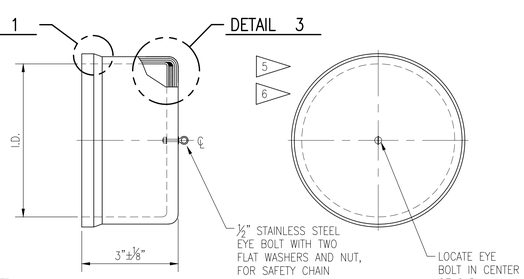

TYPICAL ECS DUST CAP
SCALE: 6"=1'-0"

ECS DUST CAP SCHEDULE		
"B" ADAPTOR O.D. (IN)	I.D. (IN)	QUANTITY REQD
8.00	8.125	2
10.00	10.125	2
12.00	12.125	3
14.00	14.125	1

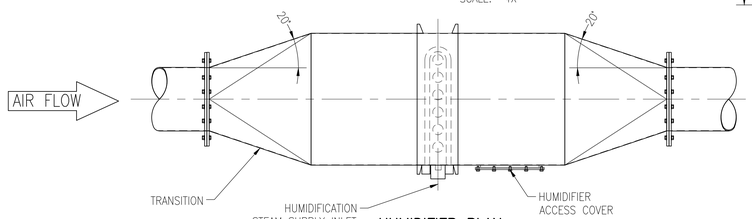

HUMIDIFIER PLAN
SCALE: NONE

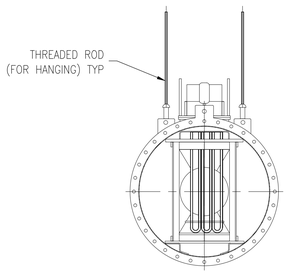

SECTION C–C
SCALE: NONE

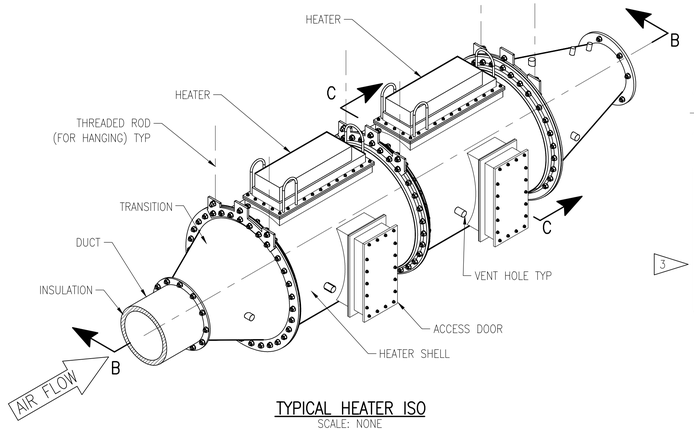

TYPICAL HEATER ISO
SCALE: NONE

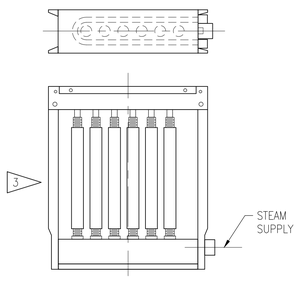

ELEVATION VIEW SECTION D–D
SCALE: NONE

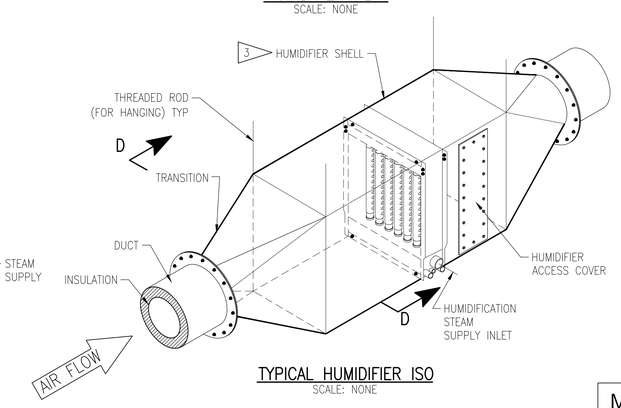

TYPICAL HUMIDIFIER ISO
SCALE: NONE

SYM	ZONE	DESCRIPTION	DATE	APPROVED
REVISIONS				

JACOBS
Jacobs Technology Inc.

NATIONAL AERONAUTICS AND SPACE ADMINISTRATION
JOHN F. KENNEDY SPACE CENTER, NASA
KENNEDY SPACE CENTER, FLORIDA

KSC LAUNCH PAD 39-B
ENVIRONMENTAL CONTROL SYSTEM (ECS) REFURBISHMENT

ECS SYSTEM PURGE AIR SECTIONS, DETAILS AND ISOMETRIC CONTINUED

SIGNATURES		DATE
DRAWN	MIKE VANHOOSE	3/07/14
CHECKED	HANNAH LYNCH	3/07/14
SUBMITTED	RAVI MUTHIAH	3/07/14
ST OF LICENSURE: FL LICENSE NO: 68076		
APPROVED	GLEN WARD	3/07/14
	DREW GILLESPIE	3/07/14

M-023

FILE NO. | SIZE F | DWG.NO. 79K39602 | REV
PCN. NO. 98898 | SHEET 26 OF 187

P:\95452\DRAWINGS\PROC\M-023.DWG
20-DEC-2013 14:14
RICHARCH

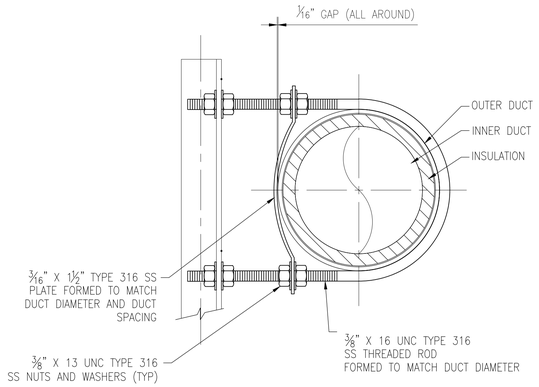

TYPICAL DUCT SUPPORT PS-3 DETAIL 3

SCALE: NTS

NOTE: ALL THREADED FASTNERS INSTALLATION SHALL COMPLY WITH MSFC-STD-486

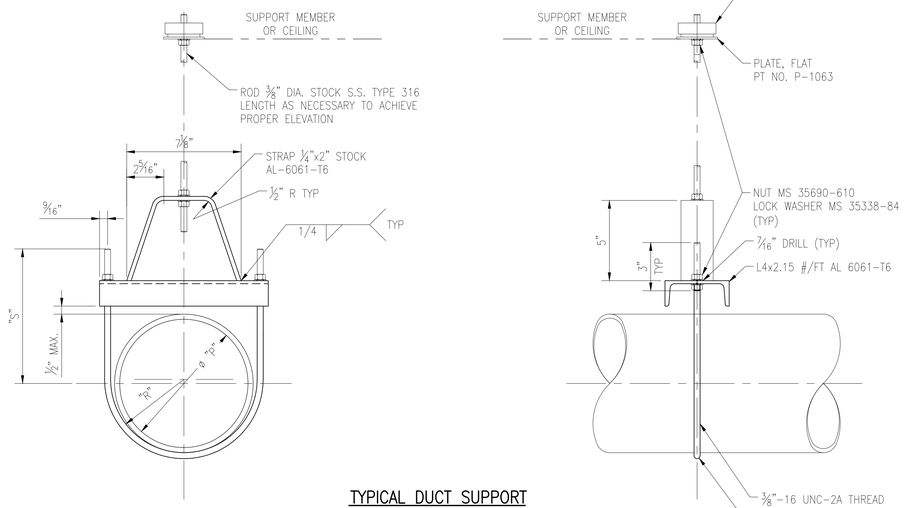

TYPICAL DUCT SUPPORT PS-4 DETAIL 4

SCALE: NTS

NOTE: ALL THREADED FASTNERS INSTALLATION SHALL COMPLY WITH MSFC-STD-486

DUCT ANCHOR SCHEDULE		
"P" SIZE	"R"	"S"
14"-18"	9 1/4"	1'-0 5/8"
12"-16"	8 1/4"	11 1/8"
10"-14"	7 1/4"	10 5/8"
5"-12"	6 1/4"	9 5/8"
8"	4 1/4"	7 1/8"

NOTES:

1. GASKET SHALL BE NEW, 40 DUROMETER POLY-CHLOROPRENE AND CONFORM TO ASME B.16.21 AND MIL-PRF-6855/1. CLASS 2, TYPE A. GASKETS SHALL BE CONTINUOUS WITHOUT GAP.
2. PERMISSIBLE IMPERFECTIONS IN FLANGE FACING FINISH SHALL CONFORM TO ASME B16.5.
3. EXISTING DUCT DATA FROM 75M15213 SHEET 41 SHOWN HERE FOR MODIFICATION TO DUCT ANGLES FOR NEW BLOWERS.

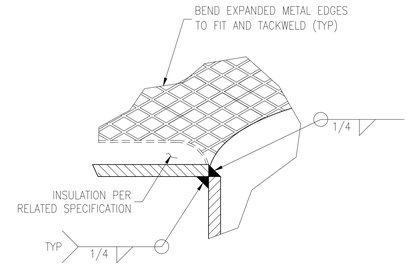

TYPICAL STUB OUT JOINT – DETAIL 5

SCALE: 1:4

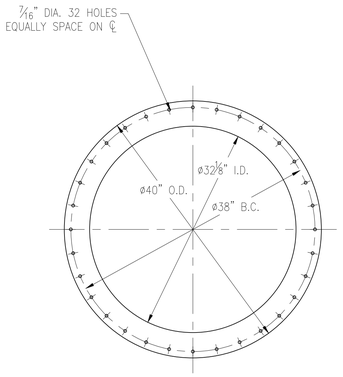

DUCT END FLANGE

SCALE: 1:10

TYP. BOTH ENDS- DUCTS A, B AND C FLANGE MAT'L- AA 6061-T6

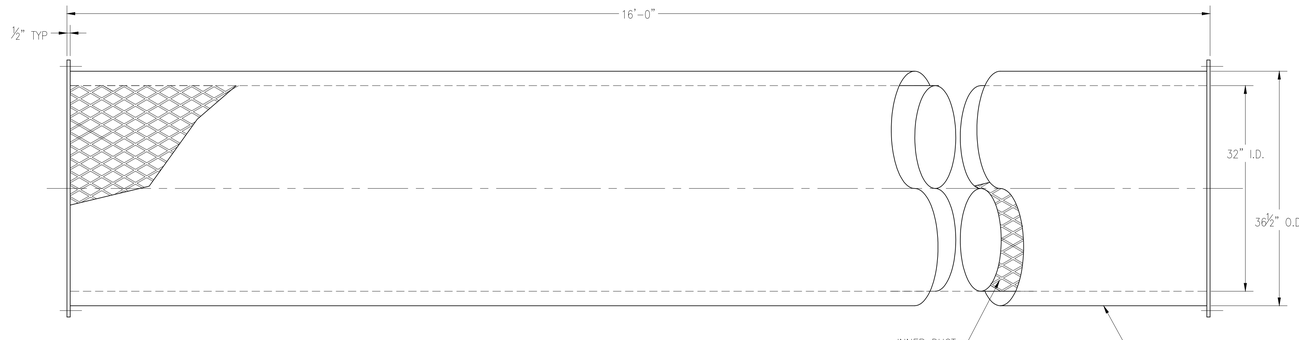

DUCT B

SCALE: 1:10

USED IN NOTE 13 ON DWG. M-003

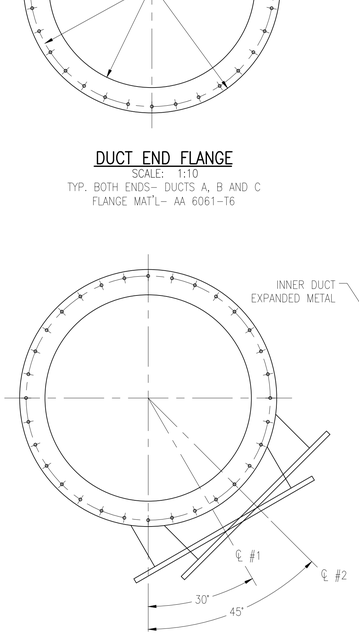

STUB OUT TRUE POSITION

SCALE: 1:10

SEE CHART

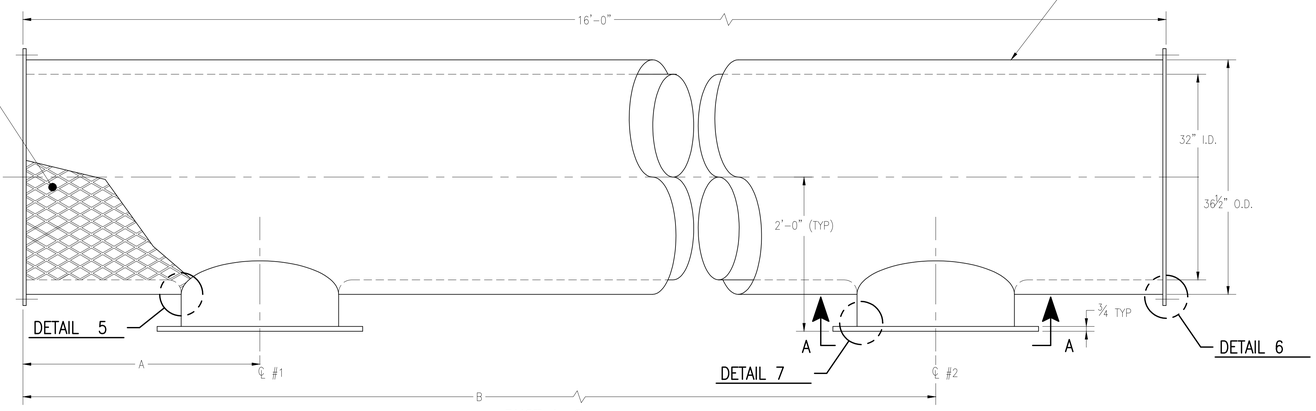

DUCT A, C

SCALE: 1:10

USED ON DWG. M-003

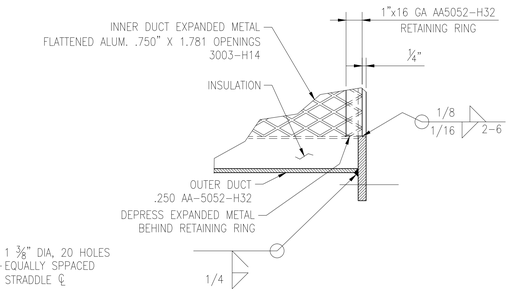

FLANGE MOUNTING – DETAIL 6

SCALE: 1:4

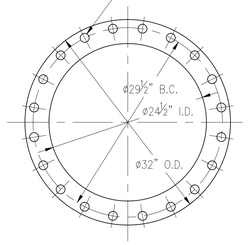

STUB OUT FLANGE VIEW A-A

SCALE: 1:10

TYP. ALL STUB OUTS FLANGE MATERIAL AA 6061-T6

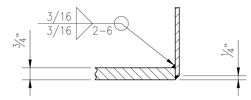

TYPICAL STUB OUT FLANGE – DETAIL 7

SCALE: N.T.S.

	STUB OUT CONNECTIONS	A DIM	B DIM	C° #1	D° #2
DUCT A	2	3'-0 7/8"	14'-2 7/8"	45°	60 1/2°
DUCT B	NONE	–	–	–	–
DUCT C	1	8'-0"	–	29 1/2°	–

SYM	ZONE	DESCRIPTION	DATE	APPROVED
REVISIONS				

JACOBS
Jacobs Technology Inc.

SIGNATURES		DATE
DRAWN	MIKE VANHOOSE	3/07/14
CHECKED	HANNAH LYNCH	3/07/14
SUBMITTED	RAVI MUTHIAH	3/07/14
ST OF LICENSURE: FL LICENSE NO: 68076		
APPROVED	GLEN WARD	3/07/14
	DREW GILLESPIE	3/07/14

NATIONAL AERONAUTICS AND SPACE ADMINISTRATION
JOHN F. KENNEDY SPACE CENTER, NASA
KENNEDY SPACE CENTER, FLORIDA

KSC LAUNCH PAD 39-B
ENVIRONMENTAL CONTROL SYSTEM (ECS) REFURBISHMENT

ECS SYSTEM PURGE AIR SECTIONS, DETAILS AND ISOMETRIC CONTINUED

M-024

FILE NO. 98898 | SIZE F | DWG.NO. 79K39602 | REV

PCN. NO. 98898 | SHEET 27 OF 187

P:\95452\DRAWINGS\PROC\M-024.DWG 06-FEB-2014 21:14 RHEADE

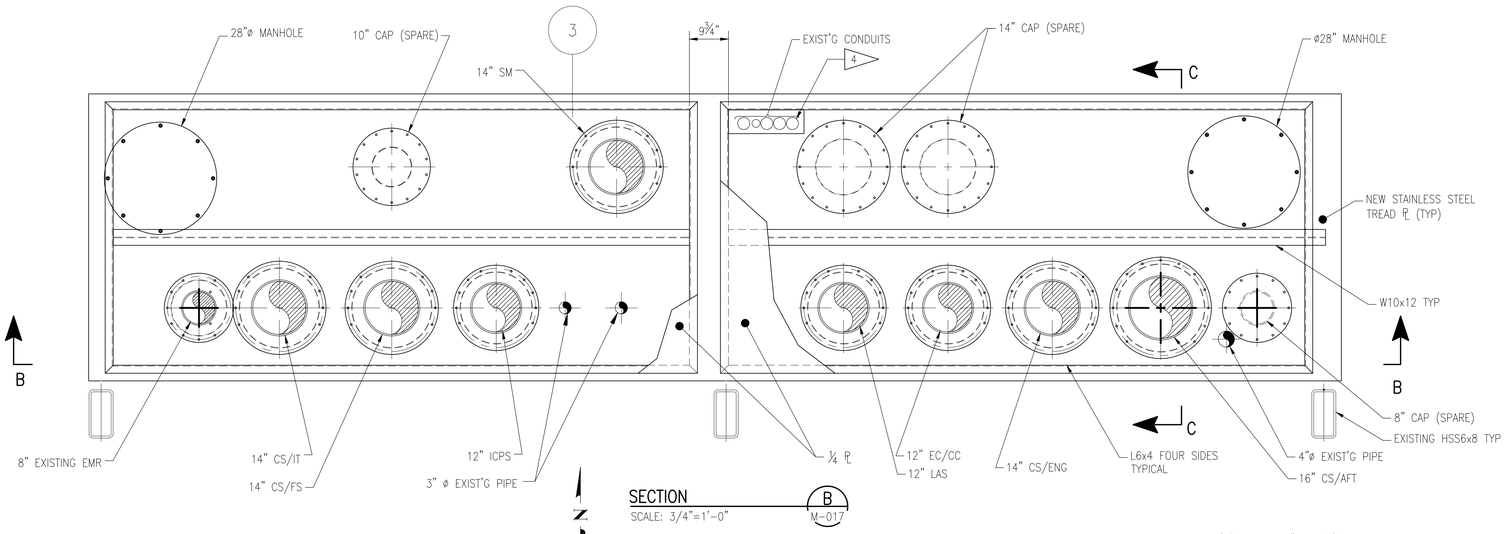

SECTION B
SCALE: 3/4"=1'-0" M-017

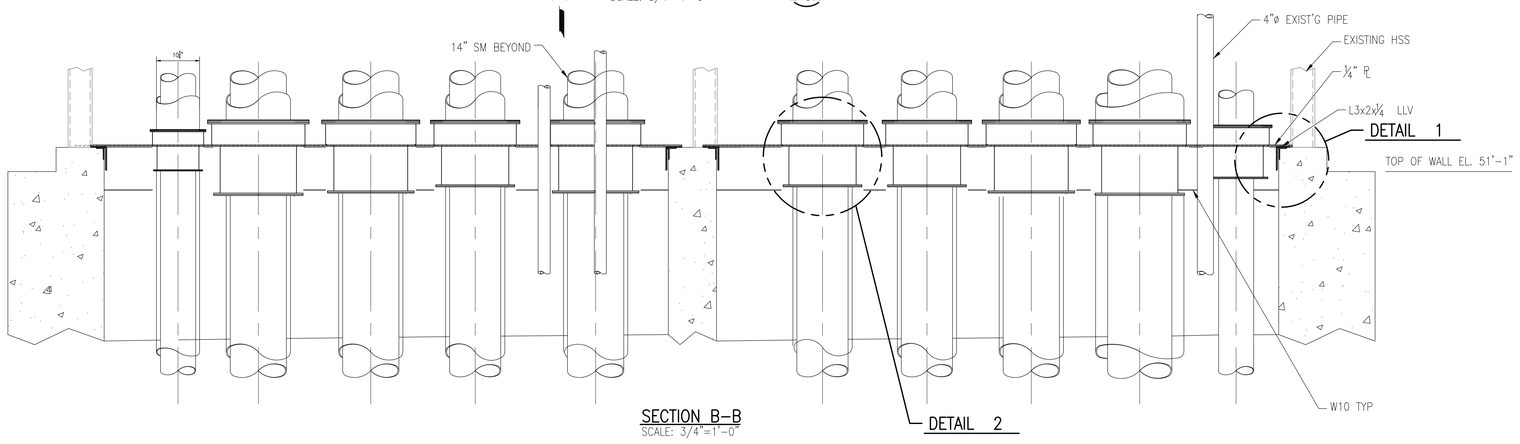

SECTION B–B
SCALE: 3/4"=1'-0"

NOTES:

1. GASKET SHALL BE NEW, 40 DUROMETER POLY-CHLOROPRENE AND CONFORM TO ASME B.16.21 AND MIL-PRF-6855/1. CLASS 2, TYPE A. GASKETS SHALL BE CONTINUOUS WITHOUT GAP.
2. DUCT FLANGES SHALL BE FLAT (▱) WITHIN .020 INCH.
3. INSTALL NEW STAINLESS STEEL COVER PLATE OVER THE VERTICAL TUNNEL OPENING AT THE PAD SURFACE. PLATE SHALL BE ¼" THK DIAMOND PATTERN TREAD PLATE.
4. CUSTOM FIT COVER PLATE AROUND EXISTING CONDUITS.
5. ALL DUCTING BELOW THIS POINT IS ALUMINUM; SINGLE WALL OR DOUBLE WALL AS INDICATED.
6. ALL DUCTING ABOVE THIS POINT IS DOUBLE WALL STAINLESS STEEL CONSTRUCTION.

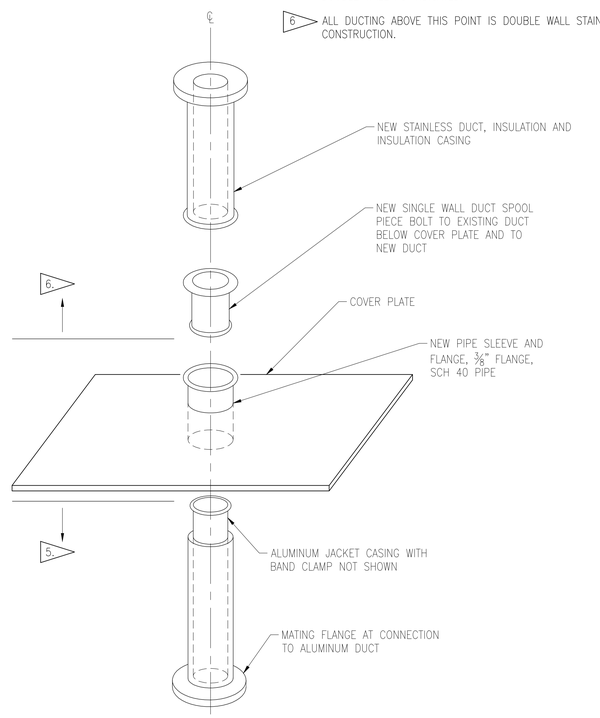

TYPICAL NEW DUCT PENETRATION – EXPLODED VIEW

DETAIL 2
SCALE: NTS

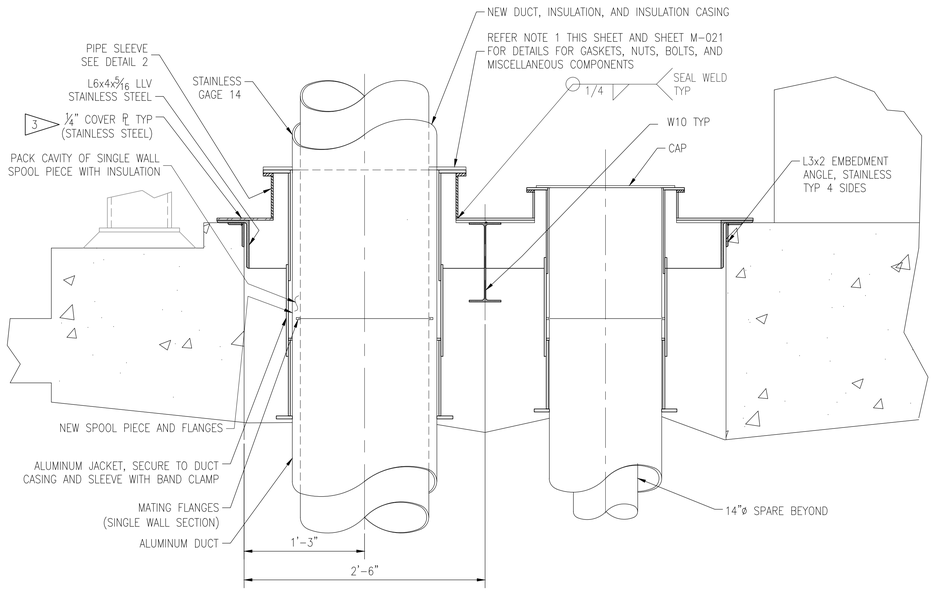

SECTION C–C
SCALE: 1 1/2 =1'-0"
SEE DETAIL 2, THIS SHEET FOR EXPLODED VIEW

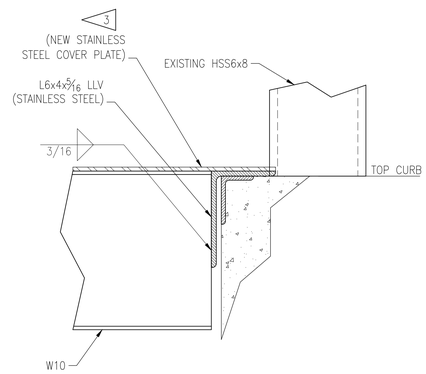

DETAIL 1
SCALE: 3"=1'-0"

SYM	ZONE	DESCRIPTION	DATE	APPROVED
REVISIONS				

JACOBS
Jacobs Technology Inc.

NATIONAL AERONAUTICS AND SPACE ADMINISTRATION
JOHN F. KENNEDY SPACE CENTER, NASA
KENNEDY SPACE CENTER, FLORIDA

SIGNATURES		DATE
DRAWN	MIKE VANHOOSE	3/07/14
CHECKED	HANNAH LYNCH	3/07/14
SUBMITTED	RAVI MUTHIAH	3/07/14
ST OF LICENSURE: FL LICENSE NO: 68076		
APPROVED	GLEN WARD	3/07/14
	DREW GILLESPIE	3/07/14

KSC LAUNCH PAD 39-B
ENVIRONMENTAL CONTROL SYSTEM (ECS) REFURBISHMENT

ECS SYSTEM PURGE AIR
SECTIONS, DETAILS AND ISOMETRIC
CONTINUED

M-025

FILE NO.	SIZE	DWG.NO.	REV
	F	79K39602	
PCN. NO. 98898		SHEET 28 OF 187	

P:\98452\DRAWINGS\PROC\M-025.DWG
06-FEB-2014 16:12
HARDYDR

NOTES:

1. NOT USED.
2. NOT USED.
3. NOT USED.
4. DEMOLISH EXISTING TOWER FANS, MOTORS, GEAR BOXES, DECK GRATING, DRIFT ELIMINATORS, CONDENSER WATER PUMPS, PIPING, AND ALL ASSOCIATED COMPONENTS.
5. EXISTING INERTIA BLOCKS FOR PUMPS TO REMAIN.
6. EXISTING CONCRETE COOLING TOWER STRUCTURE IS TO REMAIN.
7. SEE DWGS V-003 AND V-004 FOR HAZARDOUS MATERIAL SCHEDULE AND LOCATIONS.
8. EXISTING PANELS TO REMAIN.

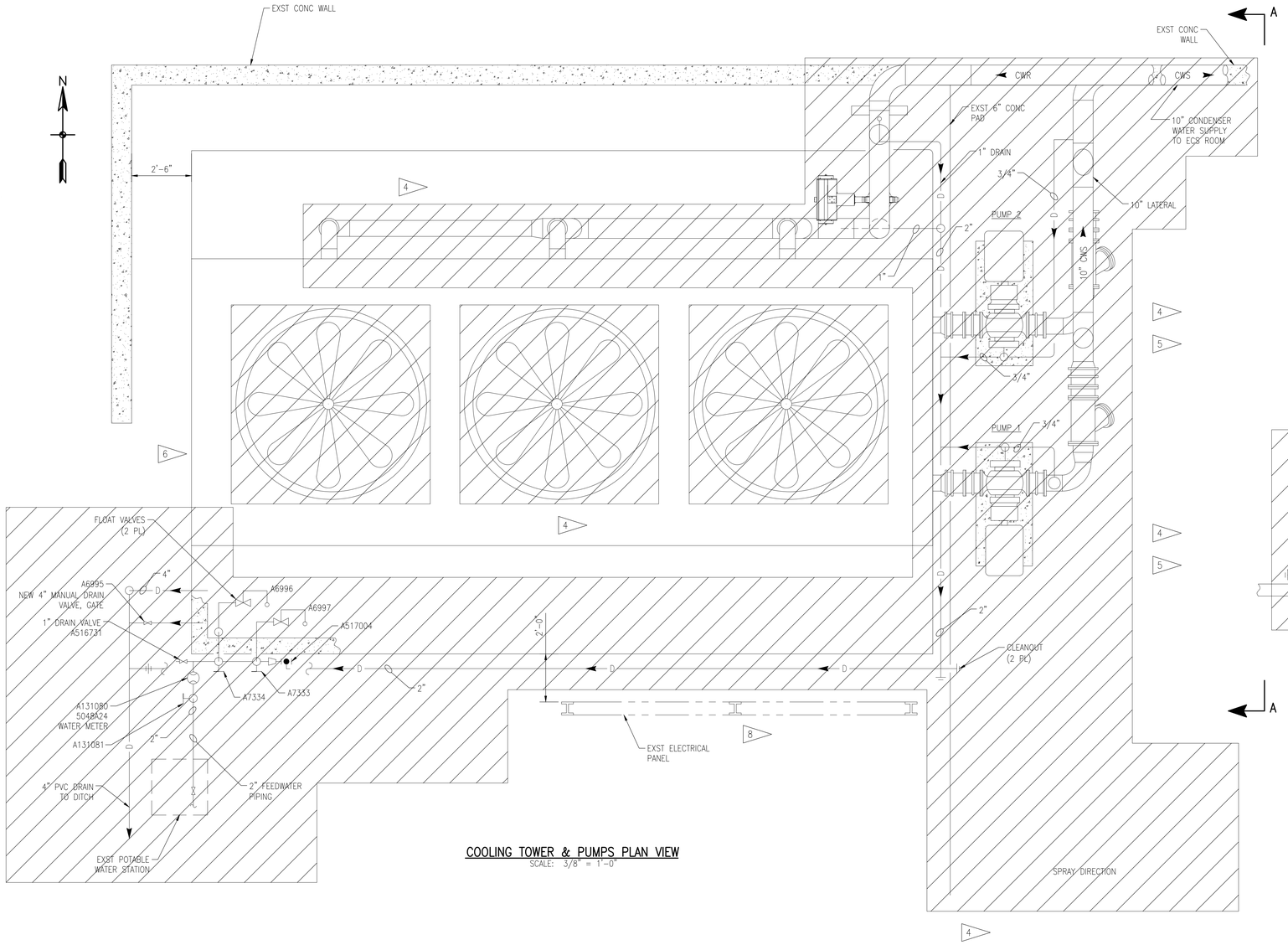

COOLING TOWER & PUMPS PLAN VIEW
SCALE: 3/8" = 1'-0"

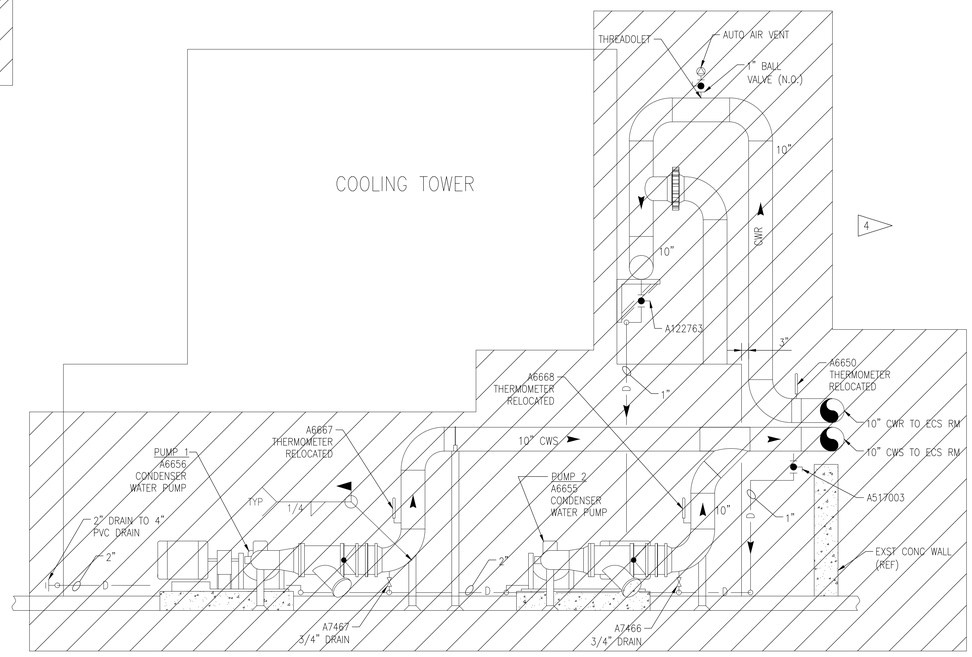

VIEW A-A
SCALE: 3/8"=1'-0"

LEGENDS:

DEMO

SYM	ZONE	DESCRIPTION	DATE	APPROVED
REVISIONS				

JACOBS
Jacobs Technology Inc.

SIGNATURES		DATE
DRAWN	MIKE VANHOOSE	3/07/14
CHECKED	BRIAN GODFREY	3/07/14
SUBMITTED	RAVI MUTHIAH	3/07/14
ST OF LICENSURE: FL LICENSE NO: 68076		
APPROVED	GLEN WARD	3/07/14
	DREW GILLESPIE	3/07/14

NATIONAL AERONAUTICS AND SPACE ADMINISTRATION
JOHN F. KENNEDY SPACE CENTER, NASA
KENNEDY SPACE CENTER, FLORIDA

KSC LAUNCH PAD 39-B
ENVIRONMENTAL CONTROL SYSTEM (ECS) REFURBISHMENT
COOLING TOWER
PIPING PLAN VIEW
DEMOLITION

FILE NO.	SIZE	DWG.NO.	REV
M-026	F	79K39602	
PCN. NO. 98898		SHEET 29 OF 187	

P:\95452\DRAWINGS\PROC\M-026.DWG
19-DEC-2013 16:52
RICHARCW

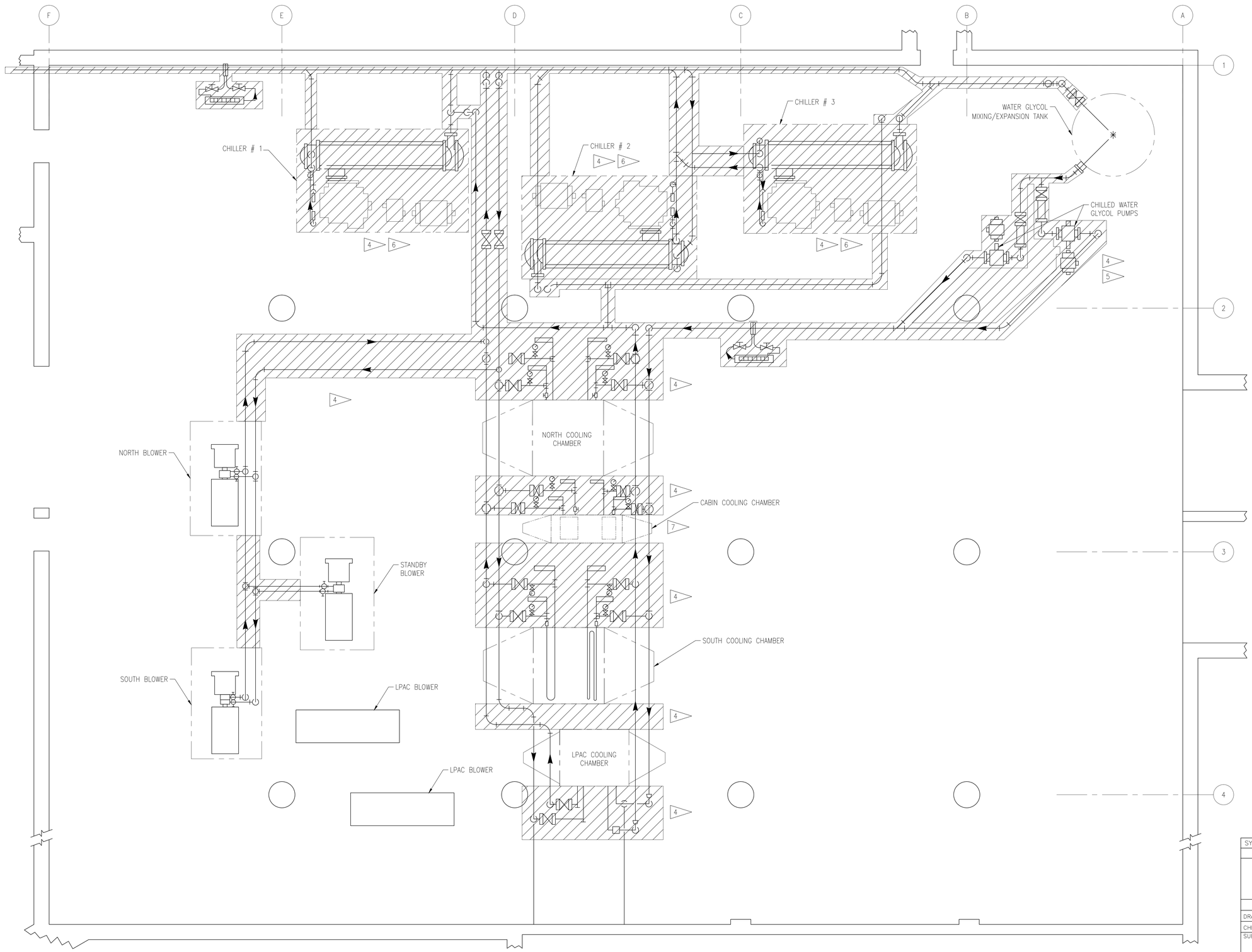

ECS ROOM PIPING PLAN
SCALE: 1/4"=1'-0"

NOTES:

1. NOT USED.
2. NOT USED.
3. NOT USED.

4 DEMOLISH EXISTING CHILLERS, GLYCOL WATER PUMPS, PIPING, AND ALL ASSOCIATED COMPONENTS.

5 EXISTING INERTIA BLOCKS FOR PUMPS TO REMAIN.

6 EXISTING INERTIA BLOCKS FOR CHILLERS TO REMAIN.

7 REMOVAL OF CABIN COOLING CHAMBER IS SPECIFIED ON DRAWINGS M-003 AND M-004.

8. SEE DWGS V-003 AND V-0004 FOR HAZARDOUS MATERIAL SCHEDULE AND LOCATIONS.
9. REMOVE EXISTING CHEMICAL FEED SYSTEM AND ASSOCIATED COMPONENTS.

LEGENDS:

DEMO

SYM	ZONE	DESCRIPTION	DATE	APPROVED
REVISIONS				

JACOBS
Jacobs Technology Inc.

SIGNATURES		DATE
DRAWN	MIKE VANHOOSE	3/07/14
CHECKED	BRIAN GODFREY	3/07/14
SUBMITTED	RAVI MUTHIAH	3/07/14
ST OF LICENSURE: FL LICENSE NO: 68076		
APPROVED	GLEN WARD	3/07/14
	DREW GILLESPIE	3/07/14

NATIONAL AERONAUTICS AND SPACE ADMINISTRATION
JOHN F. KENNEDY SPACE CENTER, NASA
KENNEDY SPACE CENTER, FLORIDA

KSC LAUNCH PAD 39-B
ENVIRONMENTAL CONTROL SYSTEM (ECS) REFURBISHMENT
ECS ROOM PIPING LAYOUT
DEMOLITION

M-027

FILE NO. | SIZE F | DWG.NO. 79K39602 | REV
PCN. NO. 98898 | SHEET 30 OF 187

P:\95452\DRAWINGS\PROC\M-027.DWG
19-DEC-2013 16:53
RICHARDW

NOTES:

1. NOT USED.
2. NOT USED.
3. NOT USED.
4. REFURBISH THE EXISTING CONCRETE COOLING TOWER. REFURBISHMENT SHALL INCLUDE THE FOLLOWING:
   - REPAIR ALL CRACKS AND SPALLING ON THE STRUCTURE.
   - INSTALL DRIFT ELIMINATORS.
   - REPLACE FAN GEAR BOXES.
   - REPLACE FANS AND MOTORS AND PROVIDE VFD CAPABILITIES.
   - REPLACE BYPASS VALVE AND ACTUATOR.
   - REPLACE DECK GRATING.
   - REPLACE CONDENSER WATER TREATMENT SYSTEM.
5. PROVIDE AND INSTALL TWO NEW CONDENSER WATER PUMPS WITH MOTORS. ONE OF THE PUMPS SHALL BE REDUNDANT IN PLACE. THE MOTORS SHALL INCLUDE SOFT START CAPABILITIES. THE PUMPS SHALL INCLUDE NEW VIBRATION ISOLATORS.
6. THE EXISTING INERTIA BLOCKS SHALL BE REUSED. THESE SHALL BE REPAIRED AND RESURFACED AS NEEDED.
7. SEE DRAWINGS M-034 AND M-035 FOR PLAN VIEW AND DRAWINGS M-034 AND M-036 FOR SECTIONS AND ELEVATIONS.
8. SEE DRAWINGS M-031, M-032, M-033, M-045, AND M-046 FOR EQUIPMENT SCHEDULES.
9. INSTALL A MAN-RATED DRIFT ELIMINATOR DIRECTLY UNDERNEATH EACH FAN TO ACCESS TRANSFER CASES AND FANS.
10. PROVIDE CHEMICAL CONTAINMENT TRAY TO HOLD ANY SPILL OR LEAK.
11. THE CONTRACTOR SHALL CONFIGURE PIPING AS REQUIRED TO FIT VARYING INLETS/OUTLETS IF DIFFERENT COMPONENTS ARE UTILIZED.
12. PROVIDE SPRAY NOZZLES, PIPING INSIDE THE TOWER AND MOUNT THE DRIFT ELIMINATORS.
13. CONNECT EXISTING GN2 TO PNEUMATIC CONTROL VALVE.

SYM	ZONE	DESCRIPTION	DATE	APPROVED
		REVISIONS		

JACOBS
Jacobs Technology Inc.

SIGNATURES		DATE
DRAWN	MIKE VANHOOSE	3/07/14
CHECKED	BRETT DACOSTA	3/07/14
SUBMITTED	RAVI MUTHIAH	3/07/14
ST OF LICENSURE: FL LICENSE NO: 68076		
APPROVED	GLEN WARD	3/07/14
	DREW GILLESPIE	3/07/14

NATIONAL AERONAUTICS AND SPACE ADMINISTRATION
JOHN F. KENNEDY SPACE CENTER, NASA
KENNEDY SPACE CENTER, FLORIDA

KSC LAUNCH PAD 39-B
ENVIRONMENTAL CONTROL SYSTEM (ECS) REFURBISHMENT

CONDENSER WATER AND WATER GLYCOL P&ID

M-028

FILE NO. | SIZE F | DWG.NO. 79K39602 | REV

PCN. NO. 98898 | SHEET 31 OF 187

P:\95452\DRAWINGS\PROC\M-028.DWG
20-DEC-2013 14:16
HARDY

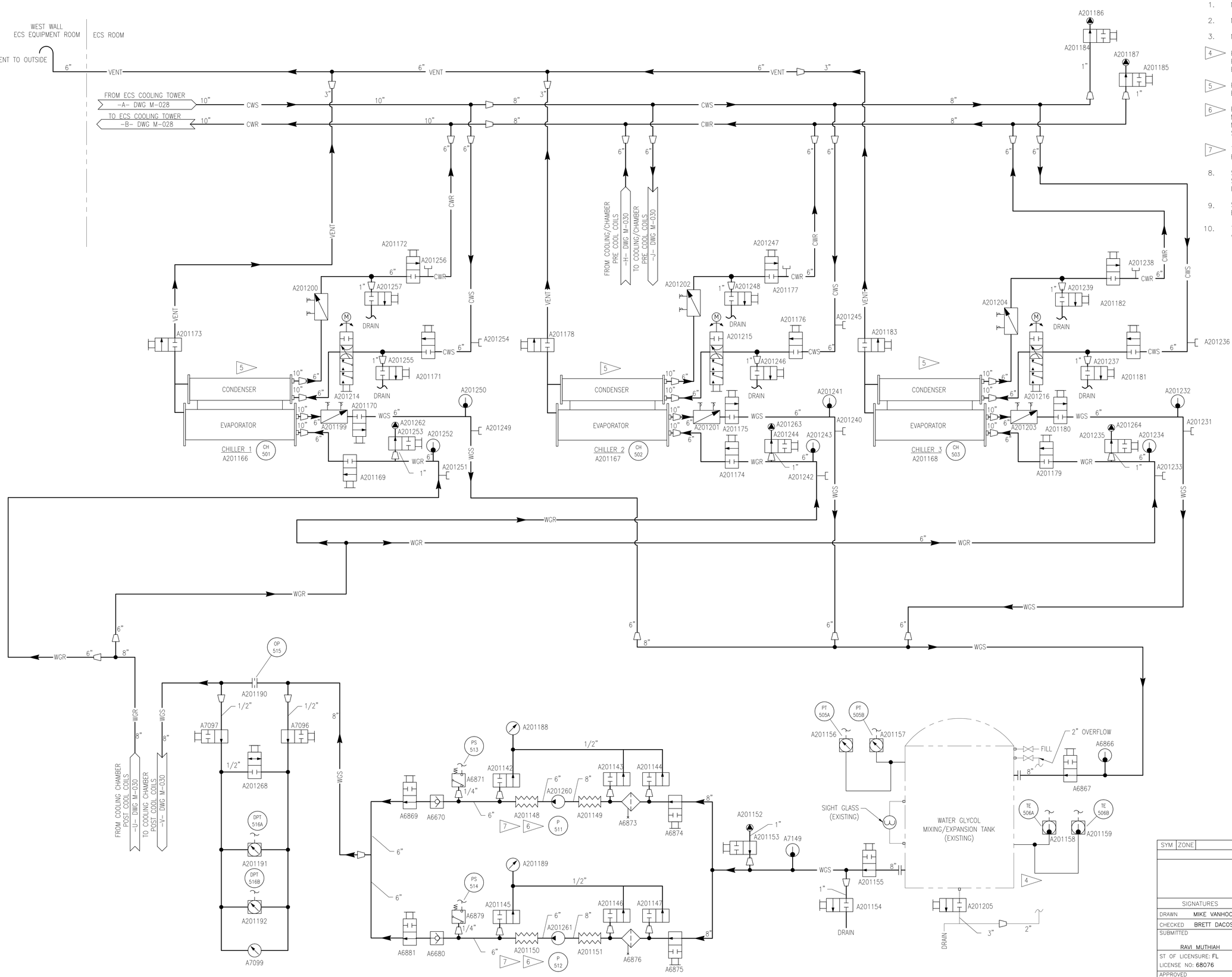

NOTES:

1. NOT USED.
2. NOT USED.
3. NOT USED.
4. PROVIDE AND INSTALL 0.080" THICKNESS FLEXI-LINER, T-1 MATERIAL FORMULATION OF VINYL POLYESTER OR APPROVED EQUAL FOR THE EXISTING WATER GLYCOL TANK.
5. PROVIDE AND INSTALL THREE NEW CHILLERS. ONE OF THEM SHALL BE REDUNDANT IN PLACE.
6. PROVIDE AND INSTALL TWO NEW GLYCOL WATER PUMPS WITH MOTORS. ONE OF THE PUMPS SHALL BE REDUNDANT IN PLACE. THE MOTORS SHALL INCLUDE SOFT START CAPABILITIES. THE PUMPS SHALL INCLUDE NEW VIBRATION ISOLATORS.
7. THE EXISTING INERTIA BLOCKS SHALL BE REUSED. THESE SHALL BE REPAIRED AND RESURFACED AS NEEDED.
8. SEE DRAWING M-035 FOR PLAN VIEW AND DRAWING M-036 FOR SECTIONS AND ELEVATIONS AND M-037 FOR ELEVATIONS AND ISOMETRICS.
9. SEE DRAWINGS M-031, M-032, M-033, M-045, AND M-046 FOR EQUIPMENT SCHEDULES.
10. THE CONTRACTOR SHALL CONFIGURE PIPING AS REQUIRED TO FIT VARYING INLETS/OUTLETS IF DIFFERENT COMPONENTS ARE UTILIZED.

SYM	ZONE	DESCRIPTION	DATE	APPROVED
REVISIONS				

JACOBS
Jacobs Technology Inc.

SIGNATURES		DATE
DRAWN	MIKE VANHOOSE	3/07/14
CHECKED	BRETT DACOSTA	3/07/14
SUBMITTED	RAVI MUTHIAH	3/07/14
ST OF LICENSURE: FL LICENSE NO: 68076		
APPROVED	GLEN WARD	3/07/14
	DREW GILLESPIE	3/07/14

NATIONAL AERONAUTICS AND SPACE ADMINISTRATION
JOHN F. KENNEDY SPACE CENTER, NASA
KENNEDY SPACE CENTER, FLORIDA

KSC LAUNCH PAD 39-B
ENVIRONMENTAL CONTROL SYSTEM (ECS) REFURBISHMENT

CONDENSER WATER AND WATER GLYCOL P&ID CONTINUED

M-029

FILE NO.	SIZE	DWG.NO.	REV
	F	79K39602	
PCN. NO. 98898		SHEET 32 OF 187	

P:\95452\DRAWINGS\PROC\M-029.DWG
20-DEC-2013 14:27
HARDY/DR

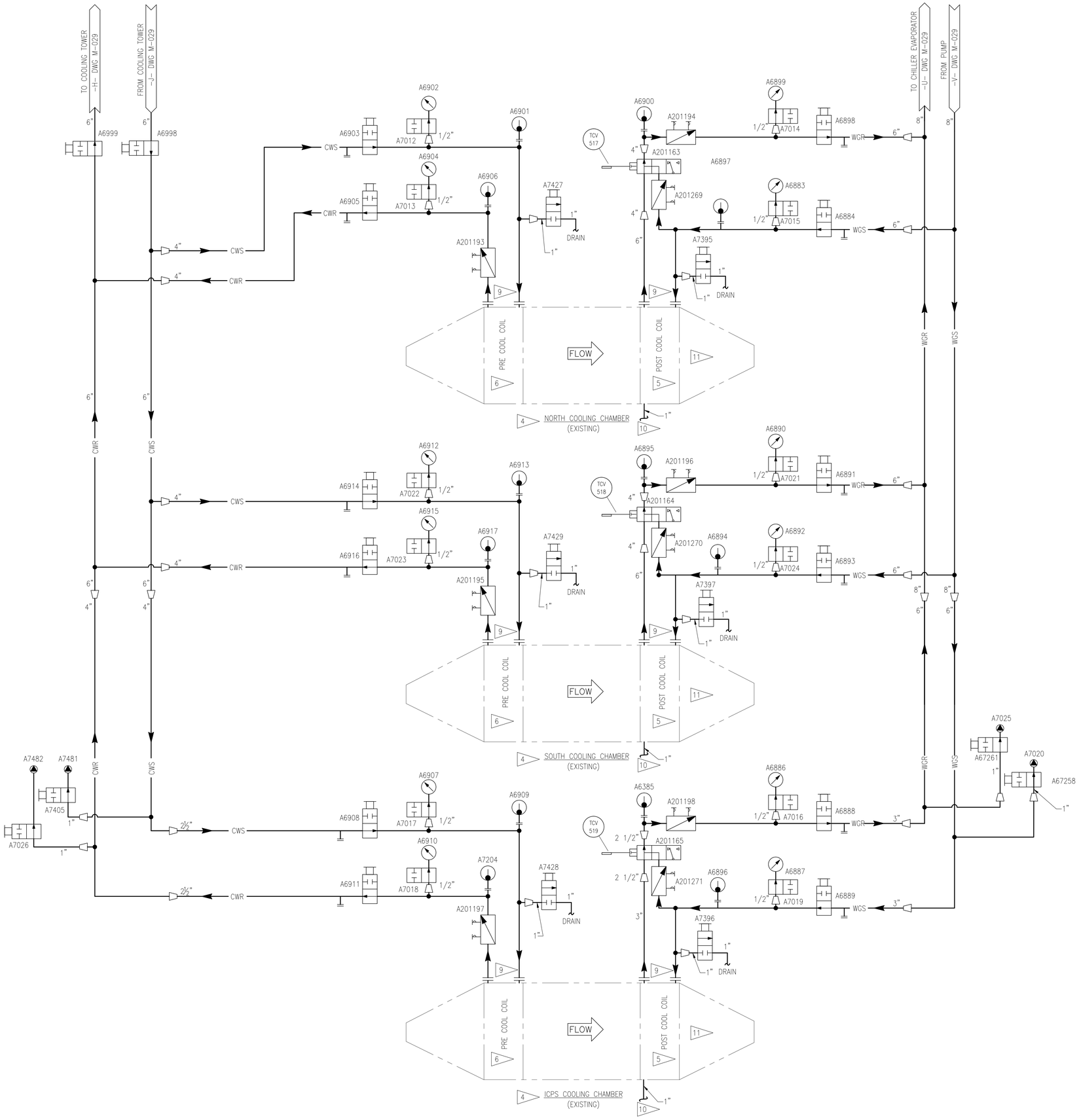

NOTES:

1. NOT USED.
2. NOT USED.
3. NOT USED.
4. EXISTING COOLING CHAMBERS SHALL BE REUSED AS NOTED ON FLAG NOTE 16 ON DRAWING M-007.
5. EXISTING POST COOLING COILS SHALL BE INSPECTED, CLEANED, AND LEAK TESTED. THE COILS SHALL BE PRESSURE TESTED AT 50 PSI. IF THERE IS ANY LEAK FOUND, THE COILS SHALL BE REPAIRED TO FIX THE LEAK IF POSSIBLE. IF NOT THE COILS SHALL BE REPLACED TO MATCH EXISTING. THE CLEANING PROCESS SHALL MEET THE REQUIREMENT SPECIFIED BY HIGH PURITY TECHNOLOGY INC. WHICH IS INCLUDED IN THE MECHANICAL SPECIFICATIONS.
6. NEW PRE-COOLING COILS SHALL BE INSTALLED. SEE DRAWING M-045 FOR PERFORMANCE REQUIREMENT.
7. SEE DRAWING M-035 FOR PLAN VIEW AND DRAWING M-036 FOR SECTIONS AND ELEVATIONS AND M-037 FOR ISOMETRIC.
8. SEE DRAWINGS M-031, M-032, M-033, M-045, AND M-046 FOR EQUIPMENT SCHEDULES.
9. FLUSH ALL PIPING PER THE SPECIFICATION PRIOR TO MAKING CONNECTIONS TO THE COOLING COILS. PROVIDE A TEMPORARY BYPASS AT LOCATIONS SHOWN TO PREVENT FLUSHING FLUIDS FROM CIRCULATING THROUGH THE COILS.
10. SEE DRAWING M-007 & M-010 FOR CONDENSATE DRAIN LINES.
11. PROVIDE FIXED PRICE OPTION FPO-2 TO REMOVE AND REPLACE EXISTING POST-COOLING COILS.
12. THE CONTRACTOR SHALL CONFIGURE PIPING AS REQUIRED TO FIT VARYING INLETS/OUTLETS IF DIFFERENT COMPONENTS ARE UTILIZED.

SYM	ZONE	DESCRIPTION	DATE	APPROVED
REVISIONS				

JACOBS
Jacobs Technology Inc.

SIGNATURES		DATE
DRAWN	MIKE VANHOOSE	3/07/14
CHECKED	BRETT DACOSTA	3/07/14
SUBMITTED	RAVI MUTHIAH	3/07/14
ST OF LICENSURE: FL LICENSE NO: 68076		
APPROVED	GLEN WARD	3/07/14
	DREW GILLESPIE	3/07/14

NATIONAL AERONAUTICS AND SPACE ADMINISTRATION
JOHN F. KENNEDY SPACE CENTER, NASA
KENNEDY SPACE CENTER, FLORIDA

KSC LAUNCH PAD 39-B
ENVIRONMENTAL CONTROL SYSTEM (ECS) REFURBISHMENT

CONDENSER WATER AND WATER GLYCOL P&ID CONTINUED

M-030

FILE NO. | SIZE F | DWG.NO. 79K39602 | REV

PCN. NO. 98898 | SHEET 33 OF 187

P:\39452\DRAWINGS\PROC\M-030.DWG
20-DEC-2013 14:29
HARDY/DR

WATER GLYCOL SCHEDULE

A NO.	DEVICE NO.	DESCRIPTION	REMARKS
A6385		TEMPERATURE GAUGE, ASHCROFT MODEL NO. 600B-01 DIRECT MOUNTED, 4 1/2" ASME B 40.3 GRADE A, +/-1% OF SPAN, OR APPROVED EQUAL, TEMPERATURE RANGE FROM 0 TO 200 DEG F	
A6650		TEMPERATURE GAUGE, ASHCROFT MODEL NO. 600B-01 DIRECT MOUNTED, 4 1/2" ASME B 40.3 GRADE A, +/-1% OF SPAN, OR APPROVED EQUAL, TEMPERATURE RANGE FROM 0 TO 200 DEG F	
A6651	CTF-401	COOLING TOWER FAN	SEE M-045
A6652	CTF-402	COOLING TOWER FAN	SEE M-045
A6653	CTF-403	COOLING TOWER FAN	SEE M-045
A201258	P-411	CONDENSER PUMP	A6655 TO BE REMOVED / SEE M-046
A201259	P-412	CONDENSER PUMP	A6656 TO BE REMOVED / SEE M-046
A6657		PRESSURE GAUGE, ASHCROFT PROCESS PRESSURE GAUGE TYPE 1259, ASME B 40.1 GRADE 2A OR APPROVED EQUAL, +/- 0.5% OF SPAN, PRESSURE RANGE FROM 0 TO 60 PSI	
A6658		PRESSURE GAUGE, ASHCROFT PROCESS PRESSURE GAUGE TYPE 1259, ASME B 40.1 GRADE 2A OR APPROVED EQUAL, +/- 0.5% OF SPAN, PRESSURE RANGE FROM 0 TO 60 PSI	
A6660		WYE STRAINER WITH DRAIN PLUG, 10" MUELLER MODEL 752 APPROVED EQUAL, 1/8" MESH, CAST IRON BODY	
A6661		WYE STRAINER WITH DRAIN PLUG, 10" MUELLER MODEL 752 APPROVED EQUAL, 1/8" MESH, CAST IRON BODY	
A6662		CHECK VALVE, POWELL FIG NO. 1259 OR APPROVED EQUAL, 10" IRON SWING CHECK VALVE	
A6663		ISOLATION VALVE, FLOWTEK FROM BRAY INTERNATIONAL, 12" MODEL F15, CLASS 150 OR APPROVED EQUAL	
A6664		ISOLATION VALVE, FLOWTEK FROM BRAY INTERNATIONAL, 12" MODEL F15, CLASS 150 OR APPROVED EQUAL	
A6665	PS-415	PRESSURE SWITCH	SEE M-046
A6666	PS-416	PRESSURE SWITCH	SEE M-046
A6667		TEMPERATURE GAUGE, ASHCROFT MODEL NO. 600B-01 DIRECT MOUNTED, 4 1/2" ASME B 40.3 GRADE A, +/-1% OF SPAN, OR APPROVED EQUAL, TEMPERATURE RANGE FROM 0 TO 200 DEG F	
A6668		TEMPERATURE GAUGE, ASHCROFT MODEL NO. 600B-01 DIRECT MOUNTED, 4 1/2" ASME B 40.3 GRADE A, +/-1% OF SPAN, OR APPROVED EQUAL, TEMPERATURE RANGE FROM 0 TO 200 DEG F	
A6669		CHECK VALVE, POWELL FIG NO. 1259 OR APPROVED EQUAL, 10" IRON SWING CHECK VALVE	
A6670		CHECK VALVE, POWELL FIG NO. 1259 OR APPROVED EQUAL, 6" IRON SWING CHECK VALVE	
A6671		ISOLATION VALVE, FLOWTEK FROM BRAY INTERNATIONAL, 10" MODEL F15, CLASS 150 OR APPROVED EQUAL	
A6672		ISOLATION VALVE, FLOWTEK FROM BRAY INTERNATIONAL, 10" MODEL F15, CLASS 150 OR APPROVED EQUAL	
A6675	TE-414A	TEMPERATURE ELEMENT	SEE M-046
A6676	TE-414B	TEMPERATURE ELEMENT	SEE M-046
A6680		CHECK VALVE, POWELL FIG NO. 1259 OR APPROVED EQUAL, 6" IRON SWING CHECK VALVE	
A67245		FLEXIBLE CONNECTION, 10" PUMP CONNECTOR, RED VALVE MODEL J-1, REINFORCED NEOPRENE BODY WITH PLATE STEEL FLANGES OR APPROVED EQUAL	
A67246		FLEXIBLE CONNECTION, 12" PUMP CONNECTOR, RED VALVE MODEL J-1, REINFORCED NEOPRENE BODY WITH PLATE STEEL FLANGES OR APPROVED EQUAL	
A67247		FLEXIBLE CONNECTION, 12" PUMP CONNECTOR, RED VALVE MODEL J-1, REINFORCED NEOPRENE BODY WITH PLATE STEEL FLANGES OR APPROVED EQUAL	
A67248		FLEXIBLE CONNECTION, 10" PUMP CONNECTOR, RED VALVE MODEL J-1, REINFORCED NEOPRENE BODY WITH PLATE STEEL FLANGES OR APPROVED EQUAL	
A67258		ISOLATION VALVE, FLOWTEK FROM BRAY INTERNATIONAL, 1" MODEL S51, CLASS 150 OR APPROVED EQUAL	
A67261		ISOLATION VALVE, FLOWTEK FROM BRAY INTERNATIONAL, 1" MODEL S51, CLASS 150 OR APPROVED EQUAL	
A6866		TEMPERATURE GAUGE, ASHCROFT MODEL NO. 600B-01 DIRECT MOUNTED, 4 1/2" ASME B 40.3 GRADE A, +/-1% OF SPAN, OR APPROVED EQUAL, TEMPERATURE RANGE FROM 0 TO 200 DEG F	
A6867		ISOLATION VALVE, FLOWTEK FROM BRAY INTERNATIONAL, 8" MODEL F15, CLASS 150 OR APPROVED EQUAL	
A6869		ISOLATION VALVE, FLOWTEK FROM BRAY INTERNATIONAL, 6" MODEL F15, CLASS 150 OR APPROVED EQUAL	
A6871	PS-513	PRESSURE SWITCH	SEE M-046
A201260	P-511	CHILLED WATER PUMP	A6872 TO BE REMOVED / SEE M-046
A6873		WYE STRAINER WITH DRAIN PLUG, 8" MUELLER MODEL 752 APPROVED EQUAL, 1/8" MESH, CAST IRON BODY	
A6874		ISOLATION VALVE, FLOWTEK FROM BRAY INTERNATIONAL, 8" MODEL F15, CLASS 150 OR APPROVED EQUAL	
A6875		ISOLATION VALVE, FLOWTEK FROM BRAY INTERNATIONAL, 8" MODEL F15, CLASS 150 OR APPROVED EQUAL	
A6876		WYE STRAINER WITH DRAIN PLUG, 8" MUELLER MODEL 752 APPROVED EQUAL, 1/8" MESH, CAST IRON BODY	
A201261	P-512	CHILLED WATER PUMP	A6878 TO BE REMOVED / SEE M-046
A6879	PS-514	PRESSURE SWITCH	SEE M-046
A6881		ISOLATION VALVE, FLOWTEK FROM BRAY INTERNATIONAL, 6" MODEL F15, CLASS 150 OR APPROVED EQUAL	
A6883		PRESSURE GAUGE, ASHCROFT PROCESS PRESSURE GAUGE TYPE 1259, ASME B 40.1 GRADE 2A OR APPROVED EQUAL, +/- 0.5% OF SPAN, PRESSURE RANGE FROM 0 TO 160 PSI	
A6884		ISOLATION VALVE, FLOWTEK FROM BRAY INTERNATIONAL, 6" MODEL F15, CLASS 150 OR APPROVED EQUAL	
A6886		PRESSURE GAUGE, ASHCROFT PROCESS PRESSURE GAUGE TYPE 1259, ASME B 40.1 GRADE 2A OR APPROVED EQUAL, +/- 0.5% OF SPAN, PRESSURE RANGE FROM 0 TO 160 PSI	
A6887		PRESSURE GAUGE, ASHCROFT PROCESS PRESSURE GAUGE TYPE 1259, ASME B 40.1 GRADE 2A OR APPROVED EQUAL, +/- 0.5% OF SPAN, PRESSURE RANGE FROM 0 TO 160 PSI	
A6888		ISOLATION VALVE, FLOWTEK FROM BRAY INTERNATIONAL, 3" MODEL F15, CLASS 150 OR APPROVED EQUAL	

WATER GLYCOL SCHEDULE CONTINUED

A NO.	DEVICE NO.	DESCRIPTION	REMARKS
A6889		ISOLATION VALVE, FLOWTEK FROM BRAY INTERNATIONAL, 3" MODEL F15, CLASS 150 OR APPROVED EQUAL	
A6890		PRESSURE GAUGE, ASHCROFT PROCESS PRESSURE GAUGE TYPE 1259, ASME B 40.1 GRADE 2A OR APPROVED EQUAL, +/- 0.5% OF SPAN, PRESSURE RANGE FROM 0 TO 160 PSI	
A6891		ISOLATION VALVE, FLOWTEK FROM BRAY INTERNATIONAL, 6" MODEL F15, CLASS 150 OR APPROVED EQUAL	
A6892		PRESSURE GAUGE, ASHCROFT PROCESS PRESSURE GAUGE TYPE 1259, ASME B 40.1 GRADE 2A OR APPROVED EQUAL, +/- 0.5% OF SPAN, PRESSURE RANGE FROM 0 TO 160 PSI	
A6893		ISOLATION VALVE, FLOWTEK FROM BRAY INTERNATIONAL, 6" MODEL F15, CLASS 150 OR APPROVED EQUAL	
A6894		TEMPERATURE GAUGE, ASHCROFT MODEL NO. 600B-01 DIRECT MOUNTED, 4 1/2" ASME B 40.3 GRADE A, +/-1% OF SPAN, OR APPROVED EQUAL, TEMPERATURE RANGE FROM 0 TO 200 DEG F	
A6895		TEMPERATURE GAUGE, ASHCROFT MODEL NO. 600B-01 DIRECT MOUNTED, 4 1/2" ASME B 40.3 GRADE A, +/-1% OF SPAN, OR APPROVED EQUAL, TEMPERATURE RANGE FROM 0 TO 200 DEG F	
A6896		TEMPERATURE GAUGE, ASHCROFT MODEL NO. 600B-01 DIRECT MOUNTED, 4 1/2" ASME B 40.3 GRADE A, +/-1% OF SPAN, OR APPROVED EQUAL, TEMPERATURE RANGE FROM 0 TO 200 DEG F	
A6897		TEMPERATURE GAUGE, ASHCROFT MODEL NO. 600B-01 DIRECT MOUNTED, 4 1/2" ASME B 40.3 GRADE A, +/-1% OF SPAN, OR APPROVED EQUAL, TEMPERATURE RANGE FROM 0 TO 200 DEG F	
A6898		ISOLATION VALVE, FLOWTEK FROM BRAY INTERNATIONAL, 6" MODEL F15, CLASS 150 OR APPROVED EQUAL	
A6899		PRESSURE GAUGE, ASHCROFT PROCESS PRESSURE GAUGE TYPE 1259, ASME B 40.1 GRADE 2A OR APPROVED EQUAL, +/- 0.5% OF SPAN, PRESSURE RANGE FROM 0 TO 160 PSI	
A6900		TEMPERATURE GAUGE, ASHCROFT MODEL NO. 600B-01 DIRECT MOUNTED, 4 1/2" ASME B 40.3 GRADE A, +/-1% OF SPAN, OR APPROVED EQUAL, TEMPERATURE RANGE FROM 0 TO 200 DEG F	
A6901		TEMPERATURE GAUGE, ASHCROFT MODEL NO. 600B-01 DIRECT MOUNTED, 4 1/2" ASME B 40.3 GRADE A, +/-1% OF SPAN, OR APPROVED EQUAL, TEMPERATURE RANGE FROM 0 TO 200 DEG F	
A6902		PRESSURE GAUGE, ASHCROFT PROCESS PRESSURE GAUGE TYPE 1259, ASME B 40.1 GRADE 2A OR APPROVED EQUAL, +/- 0.5% OF SPAN, PRESSURE RANGE FROM 0 TO 60 PSI	
A6903		ISOLATION VALVE, FLOWTEK FROM BRAY INTERNATIONAL, 4" MODEL F15, CLASS 150 OR APPROVED EQUAL	
A6904		PRESSURE GAUGE, ASHCROFT PROCESS PRESSURE GAUGE TYPE 1259, ASME B 40.1 GRADE 2A OR APPROVED EQUAL, +/- 0.5% OF SPAN, PRESSURE RANGE FROM 0 TO 60 PSI	
A6905		ISOLATION VALVE, FLOWTEK FROM BRAY INTERNATIONAL, 4" MODEL F15, CLASS 150 OR APPROVED EQUAL	
A6906		TEMPERATURE GAUGE, ASHCROFT MODEL NO. 600B-01 DIRECT MOUNTED, 4 1/2" ASME B 40.3 GRADE A, +/-1% OF SPAN, OR APPROVED EQUAL, TEMPERATURE RANGE FROM 0 TO 200 DEG F	
A6907		PRESSURE GAUGE, ASHCROFT PROCESS PRESSURE GAUGE TYPE 1259, ASME B 40.1 GRADE 2A OR APPROVED EQUAL, +/- 0.5% OF SPAN, PRESSURE RANGE FROM 0 TO 60 PSI	
A6908		ISOLATION VALVE, FLOWTEK FROM BRAY INTERNATIONAL, 2-1/2" MODEL F15, CLASS 150 OR APPROVED EQUAL	
A6909		TEMPERATURE GAUGE, ASHCROFT MODEL NO. 600B-01 DIRECT MOUNTED, 4 1/2" ASME B 40.3 GRADE A, +/-1% OF SPAN, OR APPROVED EQUAL, TEMPERATURE RANGE FROM 0 TO 200 DEG F	
A6910		PRESSURE GAUGE, ASHCROFT PROCESS PRESSURE GAUGE TYPE 1259, ASME B 40.1 GRADE 2A OR APPROVED EQUAL, +/- 0.5% OF SPAN, PRESSURE RANGE FROM 0 TO 60 PSI	
A6911		ISOLATION VALVE, FLOWTEK FROM BRAY INTERNATIONAL, 2-1/2" MODEL F15, CLASS 150 OR APPROVED EQUAL	
A6912		PRESSURE GAUGE, ASHCROFT PROCESS PRESSURE GAUGE TYPE 1259, ASME B 40.1 GRADE 2A OR APPROVED EQUAL, +/- 0.5% OF SPAN, PRESSURE RANGE FROM 0 TO 60 PSI	
A6913		TEMPERATURE GAUGE, ASHCROFT MODEL NO. 600B-01 DIRECT MOUNTED, 4 1/2" ASME B 40.3 GRADE A, +/-1% OF SPAN, OR APPROVED EQUAL, TEMPERATURE RANGE FROM 0 TO 200 DEG F	
A6914		ISOLATION VALVE, FLOWTEK FROM BRAY INTERNATIONAL, 4" MODEL F15, CLASS 150 OR APPROVED EQUAL	
A6915		PRESSURE GAUGE, ASHCROFT PROCESS PRESSURE GAUGE TYPE 1259, ASME B 40.1 GRADE 2A OR APPROVED EQUAL, +/- 0.5% OF SPAN, PRESSURE RANGE FROM 0 TO 60 PSI	
A6916		ISOLATION VALVE, FLOWTEK FROM BRAY INTERNATIONAL, 4" MODEL F15, CLASS 150 OR APPROVED EQUAL	
A6917		TEMPERATURE GAUGE, ASHCROFT MODEL NO. 600B-01 DIRECT MOUNTED, 4 1/2" ASME B 40.3 GRADE A, +/-1% OF SPAN, OR APPROVED EQUAL, TEMPERATURE RANGE FROM 0 TO 200 DEG F	
A6995		ISOLATION VALVE, FLOWTEK FROM BRAY INTERNATIONAL, 4" MODEL F15, CLASS 150 OR APPROVED EQUAL	
A6996		FLOAT VALVE, 1 1/4" MARLEY COOLING TOWER, NASA PART NUMBER 0-3231C 75M15214-PCT-1B OR APPROVED EQUAL.	
A6997		FLOAT VALVE, 1 1/4" MARLEY COOLING TOWER, NASA PART NUMBER 0-3231C 75M15214-PCT-1B OR APPROVED EQUAL.	
A6998		ISOLATION VALVE, FLOWTEK FROM BRAY INTERNATIONAL, 6" MODEL F15, CLASS 150 OR APPROVED EQUAL	
A6999		ISOLATION VALVE, FLOWTEK FROM BRAY INTERNATIONAL, 6" MODEL F15, CLASS 150 OR APPROVED EQUAL	
A7012		BLOCK AND BLEED VALVE, 1/2" ANDERSON GREENWOOD MODEL M9 OR APPROVED EQUAL	
A7013		BLOCK AND BLEED VALVE, 1/2" ANDERSON GREENWOOD MODEL M9 OR APPROVED EQUAL	
A7014		BLOCK AND BLEED VALVE, 1/2" ANDERSON GREENWOOD MODEL M9 OR APPROVED EQUAL	
A7015		BLOCK AND BLEED VALVE, 1/2" ANDERSON GREENWOOD MODEL M9 OR APPROVED EQUAL	
A7016		BLOCK AND BLEED VALVE, 1/2" ANDERSON GREENWOOD MODEL M9 OR APPROVED EQUAL	
A7017		BLOCK AND BLEED VALVE, 1/2" ANDERSON GREENWOOD MODEL M9 OR APPROVED EQUAL	
A201265		BACKFLOW PREVENTER, WATTS SERIES 007 MODEL U007M1QT-S OR EQUAL. 2" WITH STRAINER, DOUBLE ISOLATION, DOUBLE CHECK, AND BRONZE BODY OR APPROVED EQUAL	
A201266		BACKFLOW PREVENTER, WATTS SERIES 007 MODEL U007M1QT-S OR EQUAL. 2" WITH STRAINER, DOUBLE ISOLATION, DOUBLE CHECK, AND BRONZE BODY OR APPROVED EQUAL	
A201272		ISOLATION VALVE, FLOWTEK FROM BRAY INTERNATIONAL, 2" MODEL S51, CLASS 150 OR APPROVED EQUAL	
A201273		ISOLATION VALVE, FLOWTEK FROM BRAY INTERNATIONAL, 2" MODEL S51, CLASS 150 OR APPROVED EQUAL	
A201274		ISOLATION VALVE, FLOWTEK FROM BRAY INTERNATIONAL, 2" MODEL S51, CLASS 150 OR APPROVED EQUAL	
A201275		ISOLATION VALVE, FLOWTEK FROM BRAY INTERNATIONAL, 2" MODEL S51, CLASS 150 OR APPROVED EQUAL	

SYM	ZONE	DESCRIPTION	DATE	APPROVED
REVISIONS				

JACOBS
Jacobs Technology Inc.

SIGNATURES	DATE
DRAWN MIKE VANHOOSE	3/07/14
CHECKED BRETT DACOSTA	3/07/14
SUBMITTED RAVI MUTHIAH	3/07/14
ST OF LICENSURE: FL LICENSE NO: 68076	
APPROVED GLEN WARD	3/07/14
DREW GILLESPIE	3/07/14

NATIONAL AERONAUTICS AND SPACE ADMINISTRATION
JOHN F. KENNEDY SPACE CENTER, NASA
KENNEDY SPACE CENTER, FLORIDA

KSC LAUNCH PAD 39-B
ENVIRONMENTAL CONTROL SYSTEM (ECS) REFURBISHMENT
CONDENSER WATER AND
WATER GLYCOL EQUIPMENT SCHEDULE

M-031

FILE NO.	SIZE	DWG.NO.	REV
	F	79K39602	
PCN. NO. 98898		SHEET 34 OF 187	

P:\95452\DRAWINGS\PROC\M-031.DWG
20-DEC-2013 12:25
WITHERS

WATER GLYCOL SCHEDULE CONTINUED

A NO.	DEVICE NO.	DESCRIPTION	REMARKS
A7018		BLOCK AND BLEED VALVE, 1/2" ANDERSON GREENWOOD MODEL M9 OR APPROVED EQUAL	
A7019		BLOCK AND BLEED VALVE, 1/2" ANDERSON GREENWOOD MODEL M9 OR APPROVED EQUAL	
A7020		AUTOMATIC VENT, APCO 1" MODEL 143C OR APPROVED EQUAL	
A7021		BLOCK AND BLEED VALVE, 1/2" ANDERSON GREENWOOD MODEL M9 OR APPROVED EQUAL	
A7022		BLOCK AND BLEED VALVE, 1/2" ANDERSON GREENWOOD MODEL M9 OR APPROVED EQUAL	
A7023		BLOCK AND BLEED VALVE, 1/2" ANDERSON GREENWOOD MODEL M9 OR APPROVED EQUAL	
A7024		BLOCK AND BLEED VALVE, 1/2" ANDERSON GREENWOOD MODEL M9 OR APPROVED EQUAL	
A7025		AUTOMATIC VENT, APCO 1" MODEL 143C OR APPROVED EQUAL	
A7026		ISOLATION VALVE, FLOWTEK FROM BRAY INTERNATIONAL, 1" MODEL S51, CLASS 150 OR APPROVED EQUAL	
A7094		ISOLATION VALVE, FLOWTEK FROM BRAY INTERNATIONAL, 1/2" MODEL S51, CLASS 150 OR APPROVED EQUAL	
A7095		ISOLATION VALVE, FLOWTEK FROM BRAY INTERNATIONAL, 1/2" MODEL S51, CLASS 150 OR APPROVED EQUAL	
A7096		ISOLATION VALVE, FLOWTEK FROM BRAY INTERNATIONAL, 1/2" MODEL S51, CLASS 150 OR APPROVED EQUAL	
A7097		ISOLATION VALVE, FLOWTEK FROM BRAY INTERNATIONAL, 1/2" MODEL S51, CLASS 150 OR APPROVED EQUAL	
A7099		DIFFERENTIAL PRESSURE GAUGE, ASHCROFT MODEL 1125 OR APPROVED EQUAL	
A7100		DIFFERENTIAL PRESSURE GAUGE, ASHCROFT MODEL 1125 OR APPROVED EQUAL	
A7103		CHEMICAL FEED CONTROLLER, CHEMTREAT CT8000, WATER MANAGEMENT COMMAND AND CONTROLS OR APPROVED EQUAL	
A7104		ISOLATION VALVE, FLOWTEK FROM BRAY INTERNATIONAL, 1" MODEL S51, CLASS 150 OR APPROVED EQUAL	
A7105		ISOLATION VALVE, FLOWTEK FROM BRAY INTERNATIONAL, 1" MODEL S51, CLASS 150 OR APPROVED EQUAL	
A7149		TEMPERATURE GAUGE, ASHCROFT MODEL NO. 600B-01 DIRECT MOUNTED, 4 1/2" ASME B 40.3 GRADE A, +/-1% OF SPAN, OR APPROVED EQUAL, TEMPERATURE RANGE FROM 0 TO 200 DEG F	
A7204		TEMPERATURE GAUGE, ASHCROFT MODEL NO. 600B-01 DIRECT MOUNTED, 4 1/2" ASME B 40.3 GRADE A, +/-1% OF SPAN, OR APPROVED EQUAL, TEMPERATURE RANGE FROM 0 TO 200 DEG F	
A7333		ISOLATION VALVE, FLOWTEK FROM BRAY INTERNATIONAL, 2" MODEL S51, CLASS 150 OR APPROVED EQUAL	
A7334		ISOLATION VALVE, FLOWTEK FROM BRAY INTERNATIONAL, 2" MODEL S51, CLASS 150 OR APPROVED EQUAL	
A7395		DRAIN VALVE, FLOWTEK FROM BRAY INTERNATIONAL, 1" MODEL S51, CLASS 150 OR APPROVED EQUAL	
A7396		DRAIN VALVE, FLOWTEK FROM BRAY INTERNATIONAL, 1" MODEL S51, CLASS 150 OR APPROVED EQUAL	
A7397		DRAIN VALVE, FLOWTEK FROM BRAY INTERNATIONAL, 1" MODEL S51, CLASS 150 OR APPROVED EQUAL	
A7405		ISOLATION VALVE, FLOWTEK FROM BRAY INTERNATIONAL, 1" MODEL S51, CLASS 150 OR APPROVED EQUAL	
A7427		DRAIN VALVE, FLOWTEK FROM BRAY INTERNATIONAL, 1" MODEL S51, CLASS 150 OR APPROVED EQUAL	
A7428		DRAIN VALVE, FLOWTEK FROM BRAY INTERNATIONAL, 1" MODEL S51, CLASS 150 OR APPROVED EQUAL	
A7429		DRAIN VALVE, FLOWTEK FROM BRAY INTERNATIONAL, 1" MODEL S51, CLASS S51 OR APPROVED EQUAL	
A7466		DRAIN VALVE, FLOWTEK FROM BRAY INTERNATIONAL, 1" MODEL S51, CLASS 150 OR APPROVED EQUAL	
A7467		DRAIN VALVE, FLOWTEK FROM BRAY INTERNATIONAL, 1" MODEL S51, CLASS 150 OR APPROVED EQUAL	
A7468		ISOLATION VALVE, FLOWTEK FROM BRAY INTERNATIONAL, 1" MODEL S51, CLASS 150 OR APPROVED EQUAL	
A7469		ISOLATION VALVE, FLOWTEK FROM BRAY INTERNATIONAL, 1" MODEL S51, CLASS 150 OR APPROVED EQUAL	
A7476		AUTOMATIC VENT, APCO 1" MODEL 143C OR APPROVED EQUAL	
A7477		AUTOMATIC VENT, APCO 1" MODEL 143C OR APPROVED EQUAL	
A7481		AUTOMATIC VENT, APCO 1" MODEL 143C OR APPROVED EQUAL	
A7482		AUTOMATIC VENT, APCO 1" MODEL 143C OR APPROVED EQUAL	
A89224		ISOLATION VALVE, FLOWTEK FROM BRAY INTERNATIONAL, 8" MODEL F15, CLASS 150 OR APPROVED EQUAL	
A89225		ISOLATION VALVE, FLOWTEK FROM BRAY INTERNATIONAL, 8" MODEL F15, CLASS 150 OR APPROVED EQUAL	
A89226		ISOLATION VALVE, FLOWTEK FROM BRAY INTERNATIONAL, 8" MODEL F15, CLASS 150 OR APPROVED EQUAL	
A89237		DRAIN VALVE, FLOWTEK FROM BRAY INTERNATIONAL, 1" MODEL S51, CLASS 150 OR APPROVED EQUAL	
A89242		DRAIN VALVE, FLOWTEK FROM BRAY INTERNATIONAL, 1" MODEL S51, CLASS 150 OR APPROVED EQUAL	
A89243		DRAIN VALVE, FLOWTEK FROM BRAY INTERNATIONAL, 1" MODEL S51, CLASS 150 OR APPROVED EQUAL	
A122763		ISOLATION VALVE, FLOWTEK FROM BRAY INTERNATIONAL, 1" MODEL S51, CLASS 150 OR APPROVED EQUAL	
A131080		FLOWMETER 2" DELTA M TM6LNX-SA200-S6-01.00-DC-LE-DS-CB-MB OR APPROVED EQUAL	
A131081		ISOLATION VALVE, FLOWTEK FROM BRAY INTERNATIONAL, 2" MODEL S51, CLASS 150 OR APPROVED EQUAL	

WATER GLYCOL SCHEDULE CONTINUED

A NO.	DEVICE NO.	DESCRIPTION	REMARKS
A132806		ISOLATION VALVE, FLOWTEK FROM BRAY INTERNATIONAL, 1" MODEL S51, CLASS 150 OR APPROVED EQUAL	
A16719		ISOLATION VALVE, FLOWTEK FROM BRAY INTERNATIONAL, 1/2" MODEL S51, CLASS 150 OR APPROVED EQUAL	
A201134		BLOCK AND BLEED VALVE, 1/2" ANDERSON GREENWOOD MODEL M9 OR APPROVED EQUAL	
A201135		BLOCK AND BLEED VALVE, 1/2" ANDERSON GREENWOOD MODEL M9 OR APPROVED EQUAL	
A201136		BLOCK AND BLEED VALVE, 1/2" ANDERSON GREENWOOD MODEL M9 OR APPROVED EQUAL	
A201137		BLOCK AND BLEED VALVE, 1/2" ANDERSON GREENWOOD MODEL M9 OR APPROVED EQUAL	
A201138		BLOCK AND BLEED VALVE, 1/2" ANDERSON GREENWOOD MODEL M9 OR APPROVED EQUAL	
A201139		BLOCK AND BLEED VALVE, 1/2" ANDERSON GREENWOOD MODEL M9 OR APPROVED EQUAL	
A201140		STRAINER 1" KECKLEY SIMPLEX BASKET TYPE STRAINER MODEL KT-7, 40 MESH OR APPROVED EQUAL	
A201142		BLOCK AND BLEED VALVE, 1/2" ANDERSON GREENWOOD MODEL M9 OR APPROVED EQUAL	
A201143		BLOCK AND BLEED VALVE, 1/2" ANDERSON GREENWOOD MODEL M9 OR APPROVED EQUAL	
A201144		BLOCK AND BLEED VALVE, 1/2" ANDERSON GREENWOOD MODEL M9 OR APPROVED EQUAL	
A201145		BLOCK AND BLEED VALVE, 1/2" ANDERSON GREENWOOD MODEL M9 OR APPROVED EQUAL	
A201146		BLOCK AND BLEED VALVE, 1/2" ANDERSON GREENWOOD MODEL M9 OR APPROVED EQUAL	
A201147		BLOCK AND BLEED VALVE, 1/2" ANDERSON GREENWOOD MODEL M9 OR APPROVED EQUAL	
A201148		FLEXIBLE CONNECTION, 6" PUMP CONNECTOR, RED VALVE MODEL J-1, REINFORCED NEOPRENE BODY WITH PLATE STEEL FLANGES OR APPROVED EQUAL	
A201149		FLEXIBLE CONNECTION, 8" PUMP CONNECTOR, RED VALVE MODEL J-1, REINFORCED NEOPRENE BODY WITH PLATE STEEL FLANGES OR APPROVED EQUAL	
A201150		FLEXIBLE CONNECTION, 6" PUMP CONNECTOR, RED VALVE MODEL J-1, REINFORCED NEOPRENE BODY WITH PLATE STEEL FLANGES OR APPROVED EQUAL	
A201151		FLEXIBLE CONNECTION, 8" PUMP CONNECTOR, RED VALVE MODEL J-1, REINFORCED NEOPRENE BODY WITH PLATE STEEL FLANGES OR APPROVED EQUAL	
A201152		AUTOMATIC VENT, APCO 1" MODEL 143C OR APPROVED EQUAL	
A201153		ISOLATION VALVE, FLOWTEK FROM BRAY INTERNATIONAL, 1" MODEL S51, CLASS 150 OR APPROVED EQUAL	
A201154		DRAIN VALVE, FLOWTEK FROM BRAY INTERNATIONAL, 1" MODEL S51, CLASS 150 OR APPROVED EQUAL	
A201155		ISOLATION VALVE, FLOWTEK FROM BRAY INTERNATIONAL, 8" MODEL F15, CLASS 150 OR APPROVED EQUAL	
A201156	PT-505A	PRESSURE TRANSMITTER	SEE M-046
A201157	PT-505B	PRESSURE TRANSMITTER	SEE M-046
A201158	TT-506A	TRANSMITTER TEMPERATURE	SEE M-046
A201159	TT-506B	TRANSMITTER TEMPERATURE	SEE M-046
A201163	TCV-517	TEMPERATURE CONTROL VALVE	SEE M-046
A201164	TCV-518	TEMPERATURE CONTROL VALVE	SEE M-046
A201165	TCV-519	TEMPERATURE CONTROL VALVE	SEE M-046
A201166	CH-501	CHILLER	SEE M-046
A201167	CH-502	CHILLER	SEE M-046
A201168	CH-503	CHILLER	SEE M-046
A201169		ISOLATION VALVE, FLOWTEK FROM BRAY INTERNATIONAL, 6" MODEL F15, CLASS 150 OR APPROVED EQUAL	
A201170		ISOLATION VALVE, FLOWTEK FROM BRAY INTERNATIONAL, 6" MODEL F15, CLASS 150 OR APPROVED EQUAL	
A201171		ISOLATION VALVE, FLOWTEK FROM BRAY INTERNATIONAL, 6" MODEL F15, CLASS 150 OR APPROVED EQUAL	
A201172		ISOLATION VALVE, FLOWTEK FROM BRAY INTERNATIONAL, 6" MODEL F15, CLASS 150 OR APPROVED EQUAL	
A201173		ISOLATION VALVE, FLOWTEK FROM BRAY INTERNATIONAL, 3" MODEL F15, CLASS 150 OR APPROVED EQUAL	
A201174		ISOLATION VALVE, FLOWTEK FROM BRAY INTERNATIONAL, 6" MODEL F15, CLASS 150 OR APPROVED EQUAL	
A201175		ISOLATION VALVE, FLOWTEK FROM BRAY INTERNATIONAL, 6" MODEL F15, CLASS 150 OR APPROVED EQUAL	
A201267		ISOLATION VALVE, FLOWTEK FROM BRAY INTERNATIONAL, 1/2" MODEL S51, CLASS 150 OR APPROVED EQUAL	
A201268		ISOLATION VALVE, FLOWTEK FROM BRAY INTERNATIONAL, 1/2" MODEL S51, CLASS 150 OR APPROVED EQUAL	

SYM	ZONE	DESCRIPTION	DATE	APPROVED
REVISIONS				

JACOBS
Jacobs Technology Inc.

SIGNATURES		DATE
DRAWN	MIKE VANHOOSE	3/07/14
CHECKED	BRETT DACOSTA	3/07/14
SUBMITTED	RAVI MUTHIAH	3/07/14
ST OF LICENSURE: FL LICENSE NO: 68076		
APPROVED	GLEN WARD	3/07/14
	DREW GILLESPIE	3/07/14

NATIONAL AERONAUTICS AND SPACE ADMINISTRATION
JOHN F. KENNEDY SPACE CENTER, NASA
KENNEDY SPACE CENTER, FLORIDA

KSC LAUNCH PAD 39-B
ENVIRONMENTAL CONTROL SYSTEM (ECS) REFURBISHMENT

CONDENSER WATER AND WATER GLYCOL EQUIPMENT SCHEDULE CONTINUED

M-032

FILE NO. | SIZE F | DWG.NO. 79K39602 | REV

PCN. NO. 98898 | SHEET 35 OF 187

P:\95452\DRAWINGS\PROC\M-032.DWG
20-DEC-2013 12:24
WITHERS

WATER GLYCOL SCHEDULE CONTINUED

A NO.	DEVICE NO.	DESCRIPTION	REMARKS
A201176		ISOLATION VALVE, FLOWTEK FROM BRAY INTERNATIONAL, 6" MODEL F15, CLASS 150 OR APPROVED EQUAL	
A201177		ISOLATION VALVE, FLOWTEK FROM BRAY INTERNATIONAL, 6" MODEL F15, CLASS 150 OR APPROVED EQUAL	
A201178		ISOLATION VALVE, FLOWTEK FROM BRAY INTERNATIONAL, 3" MODEL F15, CLASS 150 OR APPROVED EQUAL	
A201179		ISOLATION VALVE, FLOWTEK FROM BRAY INTERNATIONAL, 6" MODEL F15, CLASS 150 OR APPROVED EQUAL	
A201180		ISOLATION VALVE, FLOWTEK FROM BRAY INTERNATIONAL, 6" MODEL F15, CLASS 150 OR APPROVED EQUAL	
A201181		ISOLATION VALVE, FLOWTEK FROM BRAY INTERNATIONAL, 6" MODEL F15, CLASS 150 OR APPROVED EQUAL	
A201182		ISOLATION VALVE, FLOWTEK FROM BRAY INTERNATIONAL, 6" MODEL F15, CLASS 150 OR APPROVED EQUAL	
A201183		ISOLATION VALVE, FLOWTEK FROM BRAY INTERNATIONAL, 3" MODEL F15, CLASS 150 OR APPROVED EQUAL	
A201184		ISOLATION VALVE, FLOWTEK FROM BRAY INTERNATIONAL, 1" MODEL S51, CLASS 150 OR APPROVED EQUAL	
A201185		ISOLATION VALVE, FLOWTEK FROM BRAY INTERNATIONAL, 1" MODEL S51, CLASS 150 OR APPROVED EQUAL	
A201186		AUTOMATIC VENT, APCO 1" MODEL 143C OR APPROVED EQUAL	
A201187		AUTOMATIC VENT, APCO 1" MODEL 143C OR APPROVED EQUAL	
A201188		PRESSURE GAUGE, ASHCROFT PROCESS PRESSURE GAUGE TYPE 1259, ASME B 40.1 GRADE 2A OR APPROVED EQUAL, +/- 0.5% OF SPAN, PRESSURE RANGE FROM 0 TO 100 PSI	
A201189		PRESSURE GAUGE, ASHCROFT PROCESS PRESSURE GAUGE TYPE 1259, ASME B 40.1 GRADE 2A OR APPROVED EQUAL, +/- 0.5% OF SPAN, PRESSURE RANGE FROM 0 TO 100 PSI	
A201190	OP-515	ORIFICE PLATE FLOWMETER	SEE M-046
A201191	DPT-516A	DIFFERENTIAL PRESSURE TRANSMITTER	PROVIDED WITH OP-515 FLOWMETER / SEE M-046
A201192	DPT-516B	DIFFERENTIAL PRESSURE TRANSMITTER	PROVIDED WITH OP-515 FLOWMETER / SEE M-046
A201193		CIRCUIT SETTER, BELL & GOSSETT, MODEL CB-4F, MANUFACTURER PART NUMBER 117112 OR APPROVED EQUAL, FLANGED CONNECTION	
A201194		CIRCUIT SETTER, BELL & GOSSETT, MODEL CB-6F, MANUFACTURER PART NUMBER 117114 OR APPROVED EQUAL, FLANGED CONNECTION	
A201195		CIRCUIT SETTER, BELL & GOSSETT, MODEL CB-4F, MANUFACTURER PART NUMBER 117112 OR APPROVED EQUAL, FLANGED CONNECTION	
A201196		CIRCUIT SETTER, BELL & GOSSETT, MODEL CB-6F, MANUFACTURER PART NUMBER 117114 OR APPROVED EQUAL, FLANGED CONNECTION	
A201197		CIRCUIT SETTER, BELL & GOSSETT, MODEL CB-2 1/2F, MANUFACTURER PART NUMBER 117116 OR APPROVED EQUAL, FLANGED CONNECTION	
A201198		CIRCUIT SETTER, BELL & GOSSETT, MODEL CB-3F, MANUFACTURER PART NUMBER 117117 OR APPROVED EQUAL, FLANGED CONNECTION	
A201199		CIRCUIT SETTER, BELL & GOSSETT, MODEL CB-6F, MANUFACTURER PART NUMBER 117114 OR APPROVED EQUAL, FLANGED CONNECTION	
A201200		CIRCUIT SETTER, BELL & GOSSETT, MODEL CB-6F, MANUFACTURER PART NUMBER 117114 OR APPROVED EQUAL, FLANGED CONNECTION	
A201201		CIRCUIT SETTER, BELL & GOSSETT, MODEL CB-6F, MANUFACTURER PART NUMBER 117114 OR APPROVED EQUAL, FLANGED CONNECTION	
A201202		CIRCUIT SETTER, BELL & GOSSETT, MODEL CB-6F, MANUFACTURER PART NUMBER 117114 OR APPROVED EQUAL, FLANGED CONNECTION	
A201203		CIRCUIT SETTER, BELL & GOSSETT, MODEL CB-6F, MANUFACTURER PART NUMBER 117114 OR APPROVED EQUAL, FLANGED CONNECTION	
A201204		CIRCUIT SETTER, BELL & GOSSETT, MODEL CB-6F, MANUFACTURER PART NUMBER 117114 OR APPROVED EQUAL, FLANGED CONNECTION	
A201205		ISOLATION VALVE, FLOWTEK FROM BRAY INTERNATIONAL, 3" MODEL F15, CLASS 150 OR APPROVED EQUAL	
A201214		METERING / CONTROL VALVE, 6" BRAY 2-WAY GLOBE, DG SERIES, ANSI CLASS 125 CAST IRON BODY FLANGED, BRONZE VALVE TRIM 150, SS (ASTM A582 TYPE 303) STEM OR APPROVED EQUAL. VALVE SHALL BE EQUIPPED WITH 24 V CONTROL AND 110 V POWER ACTUATOR.	TO BE SUPPLIED WITH CHILLER / SEE M-046
A201215		METERING / CONTROL VALVE, 6" BRAY 2-WAY GLOBE, DG SERIES, ANSI CLASS 125 CAST IRON BODY FLANGED, BRONZE VALVE TRIM 150, SS (ASTM A582 TYPE 303) STEM OR APPROVED EQUAL. VALVE SHALL BE EQUIPPED WITH 24 V CONTROL AND 110 V POWER ACTUATOR.	TO BE SUPPLIED WITH CHILLER / SEE M-046
A201216		METERING / CONTROL VALVE, 6" BRAY 2-WAY GLOBE, DG SERIES, ANSI CLASS 125 CAST IRON BODY FLANGED, BRONZE VALVE TRIM 150, SS (ASTM A582 TYPE 303) STEM OR APPROVED EQUAL. VALVE SHALL BE EQUIPPED WITH 24 V CONTROL AND 110 V POWER ACTUATOR.	TO BE SUPPLIED WITH CHILLER / SEE M-046
A201217		CHEMICAL RESERVOIR, UN-COMPLIANT PLASTIC 55-GAL DRUM, TRANSLUCENT WHITE, CLOSED HEAD, MCMASTER PN 4323575 OR APPROVED EQUAL	
A201218		CHEMICAL RESERVOIR, UN-COMPLIANT PLASTIC 55-GAL DRUM, TRANSLUCENT WHITE, CLOSED HEAD, MCMASTER PN 4323575 OR APPROVED EQUAL	
A201219		CHEMICAL RESERVOIR, UN-COMPLIANT PLASTIC 55-GAL DRUM, TRANSLUCENT WHITE, CLOSED HEAD, MCMASTER PN 4323575 OR APPROVED EQUAL	
A201220		ISOLATION VALVE, FLOWTEK FROM BRAY INTERNATIONAL, 1/2" MODEL S51, CLASS 150 OR APPROVED EQUAL	
A201221		ISOLATION VALVE, FLOWTEK FROM BRAY INTERNATIONAL, 1/2" MODEL S51, CLASS 150 OR APPROVED EQUAL	
A201222		PRESSURE GAUGE, ASHCROFT PROCESS PRESSURE GAUGE TYPE 1259, ASME B 40.1 GRADE 2A OR APPROVED EQUAL, +/- 0.5% OF SPAN, PRESSURE RANGE FROM 0 TO 100 PSI	
A201223		PRESSURE GAUGE, ASHCROFT PROCESS PRESSURE GAUGE TYPE 1259, ASME B 40.1 GRADE 2A OR APPROVED EQUAL, +/- 0.5% OF SPAN, PRESSURE RANGE FROM 0 TO 100 PSI	
A201231		WELDOLET, PIPE PORT	
A201269		CIRCUIT SETTER, BELL & GOSSETT, MODEL CB-6F, MANUFACTURER PART NUMBER 117114 OR APPROVED EQUAL, FLANGED CONNECTION	
A201270		CIRCUIT SETTER, BELL & GOSSETT, MODEL CB-6F, MANUFACTURER PART NUMBER 117114 OR APPROVED EQUAL, FLANGED CONNECTION	
A201271		CIRCUIT SETTER, BELL & GOSSETT, MODEL CB-3F, MANUFACTURER PART NUMBER 117117 OR APPROVED EQUAL, FLANGED CONNECTION	

WATER GLYCOL SCHEDULE CONTINUED

A NO.	DEVICE NO.	DESCRIPTION	REMARKS
A201232		TEMPERATURE GAUGE, ASHCROFT MODEL NO. 600B-01 DIRECT MOUNTED, 4 1/2" ASME B 40.3 GRADE A, +/-1% OF SPAN, OR APPROVED EQUAL, TEMPERATURE RANGE FROM 0 TO 200 DEG F	
A201233		WELDOLET, PIPE PORT	
A201234		TEMPERATURE GAUGE, ASHCROFT MODEL NO. 600B-01 DIRECT MOUNTED, 4 1/2" ASME B 40.3 GRADE A, +/-1% OF SPAN, OR APPROVED EQUAL, TEMPERATURE RANGE FROM 0 TO 200 DEG F	
A201235		ISOLATION VALVE, FLOWTEK FROM BRAY INTERNATIONAL, 1" MODEL S51, CLASS 150 OR APPROVED EQUAL	
A201236		WELDOLET, PIPE PORT	
A201237		DRAIN VALVE, FLOWTEK FROM BRAY INTERNATIONAL, 1" MODEL S51, CLASS 150 OR APPROVED EQUAL	
A201238		WELDOLET, PIPE PORT	
A201239		DRAIN VALVE, FLOWTEK FROM BRAY INTERNATIONAL, 1" MODEL S51, CLASS 150 OR APPROVED EQUAL	
A201240		WELDOLET, PIPE PORT	
A201241		TEMPERATURE GAUGE, ASHCROFT MODEL NO. 600B-01 DIRECT MOUNTED, 4 1/2" ASME B 40.3 GRADE A, +/-1% OF SPAN, OR APPROVED EQUAL, TEMPERATURE RANGE FROM 0 TO 200 DEG F	
A201242		WELDOLET, PIPE PORT	
A201243		TEMPERATURE GAUGE, ASHCROFT MODEL NO. 600B-01 DIRECT MOUNTED, 4 1/2" ASME B 40.3 GRADE A, +/-1% OF SPAN, OR APPROVED EQUAL, TEMPERATURE RANGE FROM 0 TO 200 DEG F	
A201244		ISOLATION VALVE, FLOWTEK FROM BRAY INTERNATIONAL, 1" MODEL S51, CLASS 150 OR APPROVED EQUAL	
A201245		WELDOLET, PIPE PORT	
A201246		DRAIN VALVE, FLOWTEK FROM BRAY INTERNATIONAL, 1" MODEL S51, CLASS 150 OR APPROVED EQUAL	
A201247		WELDOLET, PIPE PORT	
A201248		DRAIN VALVE, FLOWTEK FROM BRAY INTERNATIONAL, 1" MODEL S51, CLASS 150 OR APPROVED EQUAL	
A201249		WELDOLET, PIPE PORT	
A201250		TEMPERATURE GAUGE, ASHCROFT MODEL NO. 600B-01 DIRECT MOUNTED, 4 1/2" ASME B 40.3 GRADE A, +/-1% OF SPAN, OR APPROVED EQUAL, TEMPERATURE RANGE FROM 0 TO 200 DEG F	
A201251		WELDOLET, PIPE PORT	
A201252		TEMPERATURE GAUGE, ASHCROFT MODEL NO. 600B-01 DIRECT MOUNTED, 4 1/2" ASME B 40.3 GRADE A, +/-1% OF SPAN, OR APPROVED EQUAL, TEMPERATURE RANGE FROM 0 TO 200 DEG F	
A201253		ISOLATION VALVE, FLOWTEK FROM BRAY INTERNATIONAL, 1" MODEL S51, CLASS 150 OR APPROVED EQUAL	
A201254		WELDOLET, PIPE PORT	
A201255		DRAIN VALVE, FLOWTEK FROM BRAY INTERNATIONAL, 1" MODEL S51, CLASS 150 OR APPROVED EQUAL	
A201256		WELDOLET, PIPE PORT	
A201257		DRAIN VALVE, FLOWTEK FROM BRAY INTERNATIONAL, 1" MODEL S51, CLASS 150 OR APPROVED EQUAL	
A201262		AUTOMATIC VENT, APCO 1" MODEL 143C OR APPROVED EQUAL	
A201263		AUTOMATIC VENT, APCO 1" MODEL 143C OR APPROVED EQUAL	
A201264		AUTOMATIC VENT, APCO 1" MODEL 143C OR APPROVED EQUAL	
A503625	OP-413	ORIFICE PLATE FLOWMETER	SEE M-046
A503626	DPT-417A	DIFFERENTIAL PRESSURE TRANSMITTER	PROVIDED WITH OP-413 FLOWMETER / SEE M-046
A503627	DPT-417B	DIFFERENTIAL PRESSURE TRANSMITTER	PROVIDED WITH OP-413 FLOWMETER / SEE M-046
A516720		ELECTRIC METERING PUMP, PULSATRON LE44A-PTC1-XXX, 1.85 GPH, 100 PSI, INDOOR/OUTDOOR USE, WALL MOUNTABLE, 115 VAC / 50-60 HZ / 1 PH OR APPROVED EQUAL	
A516722		ELECTRIC METERING PUMP, PULSATRON LE44A-PTC1-XXX, 1.85 GPH, 100 PSI, INDOOR/OUTDOOR USE, WALL MOUNTABLE, 115 VAC / 50-60 HZ / 1 PH OR APPROVED EQUAL	
A516723		ELECTRIC METERING PUMP, PULSATRON LE44A-PTC1-XXX, 1.85 GPH, 100 PSI, INDOOR/OUTDOOR USE, WALL MOUNTABLE, 115 VAC / 50-60 HZ / 1 PH OR APPROVED EQUAL	
A516726		ISOLATION VALVE, FLOWTEK FROM BRAY INTERNATIONAL, 1-1/2"MODEL S51, CLASS 150 OR APPROVED EQUAL	
A517003		ISOLATION VALVE, FLOWTEK FROM BRAY INTERNATIONAL, 1" MODEL S51, CLASS 150 OR APPROVED EQUAL	
A517004		DRAIN VALVE, FLOWTEK FROM BRAY INTERNATIONAL, 1" MODEL S51, CLASS 150 OR APPROVED EQUAL	
A518150		AUTOMATIC VENT, APCO 1" MODEL 143C	
A518151		ISOLATION VALVE, FLOWTEK FROM BRAY INTERNATIONAL, 1" MODEL S51, CLASS 150 OR APPROVED EQUAL	
A536700		PART OF 3-WAY CONTROL VALVE A536700, TIED TOGETHER WITH LINKAGE/MOUNTING KIT	SEE M-046
A536702	FCV-415	CONTROL VALVE	SEE M-046

SYM	ZONE	DESCRIPTION	DATE	APPROVED
REVISIONS				

JACOBS
Jacobs Technology Inc.

SIGNATURES	DATE
DRAWN MIKE VANHOOSE	3/07/14
CHECKED BRETT DACOSTA	3/07/14
SUBMITTED RAVI MUTHIAH	3/07/14
ST OF LICENSURE: FL LICENSE NO: 68076	
APPROVED GLEN WARD	3/07/14
DREW GILLESPIE	3/07/14

NATIONAL AERONAUTICS AND SPACE ADMINISTRATION
JOHN F. KENNEDY SPACE CENTER, NASA
KENNEDY SPACE CENTER, FLORIDA

KSC LAUNCH PAD 39-B
ENVIRONMENTAL CONTROL SYSTEM (ECS) REFURBISHMENT

CONDENSER WATER AND WATER GLYCOL EQUIPMENT SCHEDULE CONTINUED

FILE NO.	SIZE	DWG.NO.	REV
	F	79K39602	
PCN. NO. 98898		SHEET 36 OF 187	

M-033

F:\95452\DRAWINGS\PROC\M-033.DWG
20-DEC-2013 12:24
WITHERS

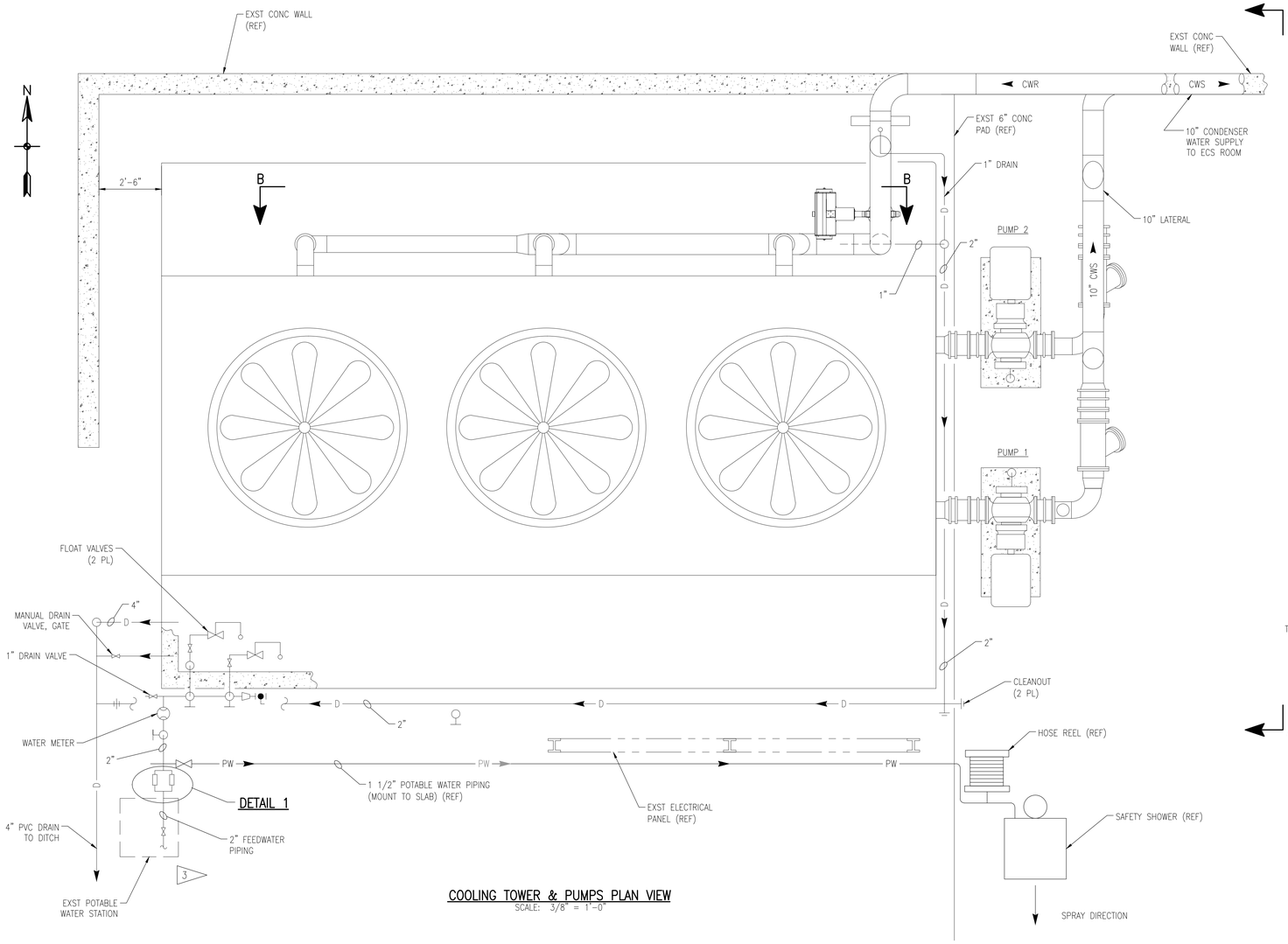

COOLING TOWER & PUMPS PLAN VIEW
SCALE: 3/8" = 1'-0"

NOTES:

1. SEE DRAWINGS M-028, M-029, AND M-030 FOR SCHEMATICS.
2. SEE DRAWINGS M-031, M-032, M-033 AND M-046 FOR EQUIPMENT SCHEDULES.
3. REPLACE THE EXISTING MAKE-UP WATER LINE FROM JUST ABOVE THE GROUND TO BACKFLOW PREVENTER.
4. THE CONTRACTOR SHALL CONFIGURE PIPING AS REQUIRED TO FIT VARYING INLETS/OUTLETS IF DIFFERENT COMPONENTS ARE UTILIZED.

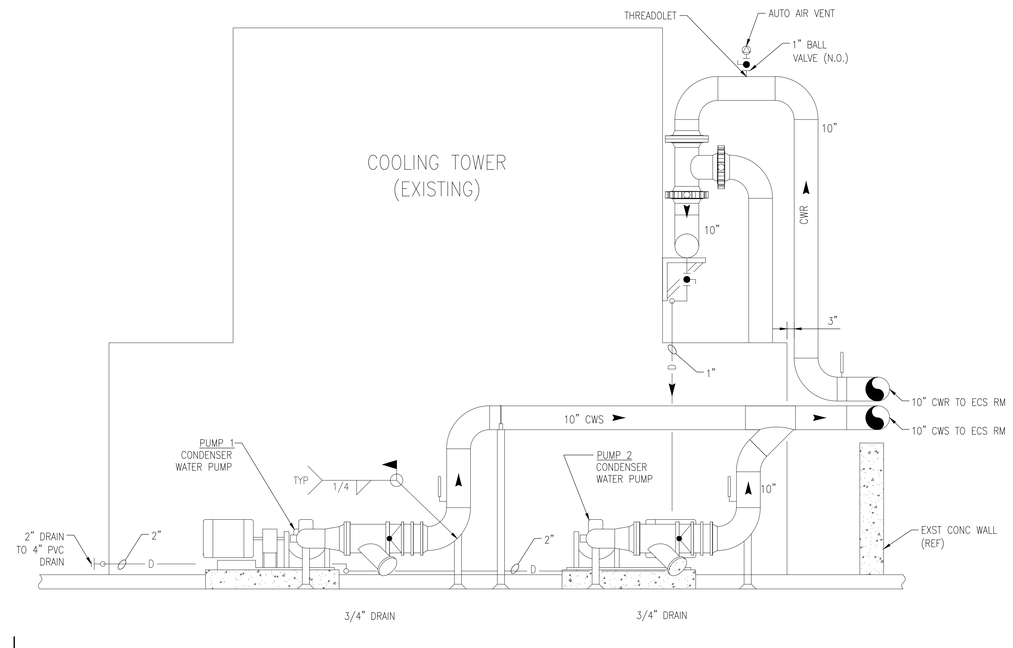

SECTION A-A
SCALE: 3/8" = 1'-0"

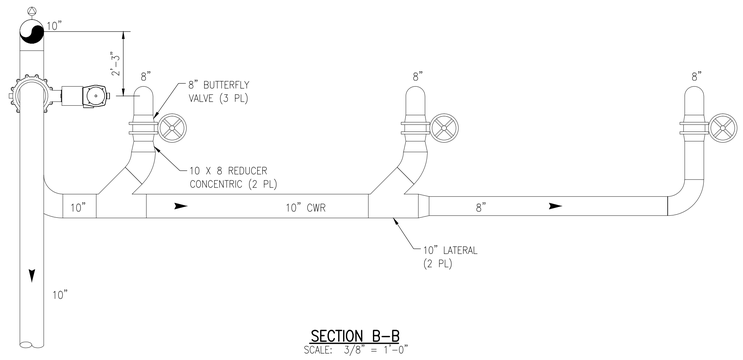

SECTION B-B
SCALE: 3/8" = 1'-0"

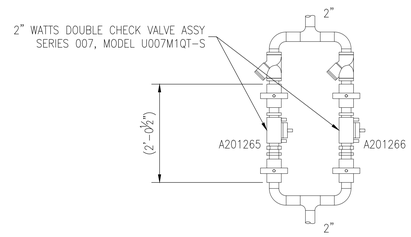

DETAIL 1
SCALE: 3/4" = 1'-0"

SYM	ZONE	DESCRIPTION	DATE	APPROVED
REVISIONS				

JACOBS
Jacobs Technology Inc.

NATIONAL AERONAUTICS AND SPACE ADMINISTRATION
JOHN F. KENNEDY SPACE CENTER, NASA
KENNEDY SPACE CENTER, FLORIDA

KSC LAUNCH PAD 39-B
ENVIRONMENTAL CONTROL SYSTEM (ECS) REFURBISHMENT
COOLING TOWER
PLAN VIEW

SIGNATURES		DATE
DRAWN	MIKE VANHOOSE	3/07/14
CHECKED	BRIAN GODFREY	3/07/14
SUBMITTED	RAVI MUTHIAH	3/07/14
ST OF LICENSURE: FL LICENSE NO: 68076		
APPROVED	GLEN WARD	3/07/14
	DREW GILLESPIE	3/07/14

FILE NO.	SIZE	DWG.NO.	REV
M-034	F	79K39602	
PCN. NO. 98898		SHEET 37 OF 187	

P:\95452\DRAWINGS\PROC\M-034.DWG
03-FEB-2014 08:26
HARDYDR

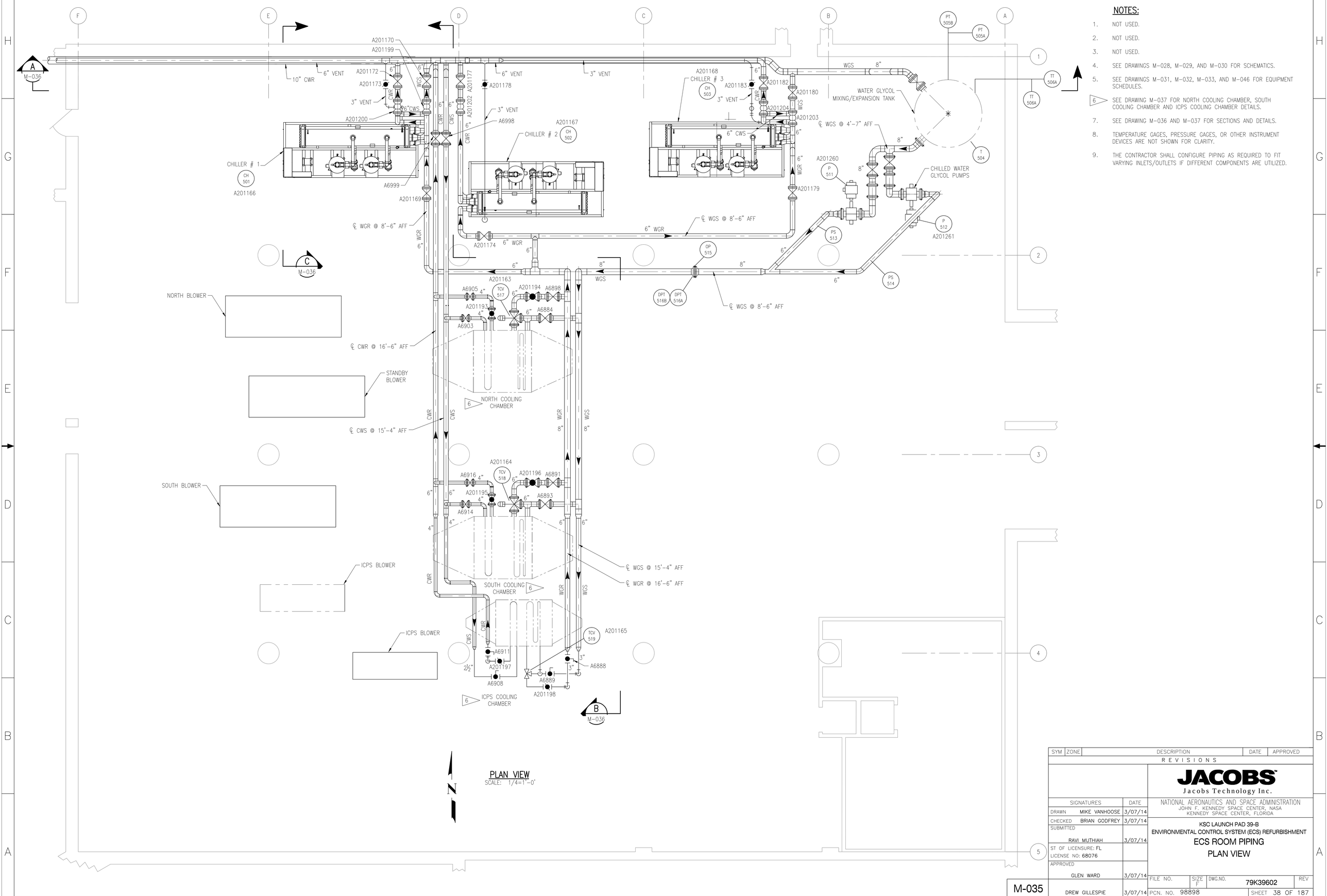

NOTES:

1. NOT USED.
2. NOT USED.
3. NOT USED.
4. SEE DRAWINGS M-028, M-029, AND M-030 FOR SCHEMATICS.
5. SEE DRAWINGS M-031, M-032, M-033, AND M-046 FOR EQUIPMENT SCHEDULES.
6. SEE DRAWING M-037 FOR NORTH COOLING CHAMBER, SOUTH COOLING CHAMBER AND ICPS COOLING CHAMBER DETAILS.
7. SEE DRAWING M-036 AND M-037 FOR SECTIONS AND DETAILS.
8. TEMPERATURE GAGES, PRESSURE GAGES, OR OTHER INSTRUMENT DEVICES ARE NOT SHOWN FOR CLARITY.
9. THE CONTRACTOR SHALL CONFIGURE PIPING AS REQUIRED TO FIT VARYING INLETS/OUTLETS IF DIFFERENT COMPONENTS ARE UTILIZED.

PLAN VIEW

SCALE: 1/4=1'-0"

SYM	ZONE	DESCRIPTION	DATE	APPROVED
REVISIONS				

SIGNATURES		DATE
DRAWN	MIKE VANHOOSE	3/07/14
CHECKED	BRIAN GODFREY	3/07/14
SUBMITTED	RAVI MUTHIAH	3/07/14
ST OF LICENSURE: FL LICENSE NO: 68076		
APPROVED	GLEN WARD	3/07/14
	DREW GILLESPIE	3/07/14

JACOBS™
Jacobs Technology Inc.

NATIONAL AERONAUTICS AND SPACE ADMINISTRATION
JOHN F. KENNEDY SPACE CENTER, NASA
KENNEDY SPACE CENTER, FLORIDA

KSC LAUNCH PAD 39-B
ENVIRONMENTAL CONTROL SYSTEM (ECS) REFURBISHMENT
ECS ROOM PIPING
PLAN VIEW

M-035

FILE NO. | SIZE F | DWG.NO. 79K39602 | REV
PCN. NO. 98898 | SHEET 38 OF 187

P:\95452\DRAWINGS\PROC\M-035.DWG
19-DEC-2013 16:55
RICHARCW

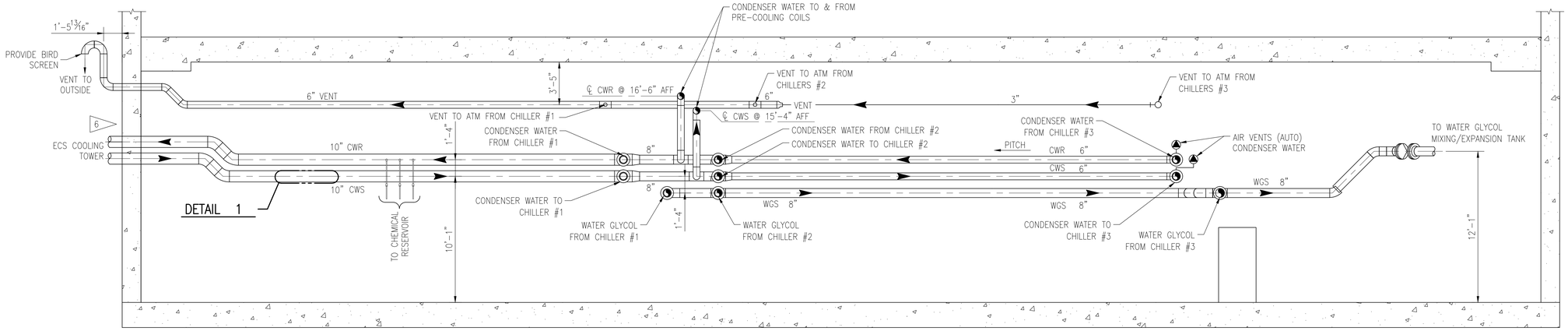

SECTION A
SCALE: 1/4"=1'-0"
M-035

NOTES:

1. NOT USED.
2. NOT USED.
3. NOT USED.
4. SEE DRAWINGS M-028, M-029, AND M-030 FOR SCHEMATICS.
5. SEE DRAWINGS M-031, M-032, M-033, AND M-046 FOR EQUIPMENT SCHEDULES.
6. EXISTING PIPE SUPPORTS SHALL BE REUSED AFTER SAND BLASTED, COATED, AND PAINTED AS SPECIFIED ON THE MECHANICAL SPECIFICATIONS.
7. THE CONTRACTOR SHALL CONFIGURE PIPING AS REQUIRED TO FIT VARYING INLETS/OUTLETS IF DIFFERENT COMPONENTS ARE UTILIZED.

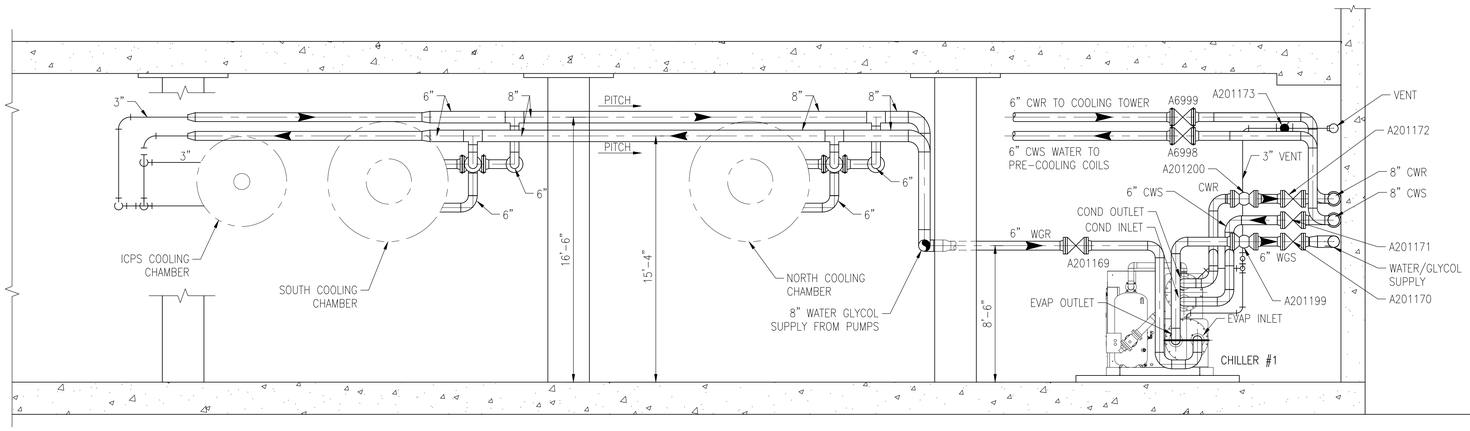

SECTION B
SCALE: 1/4"=1'-0"
M-035

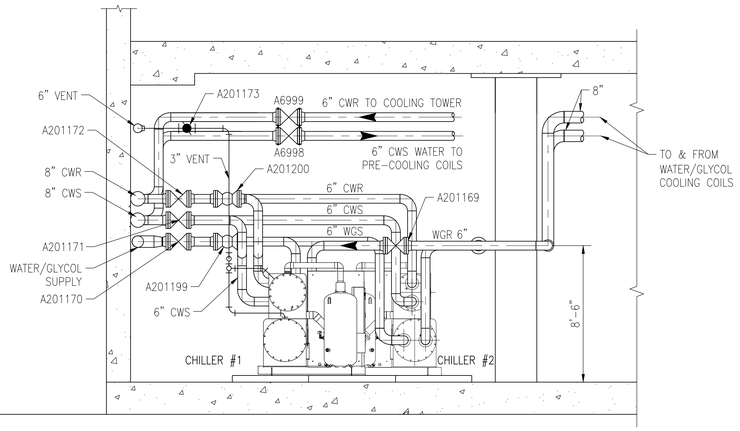

SECTION C
SCALE: 1/4"=1'-0"
M-035

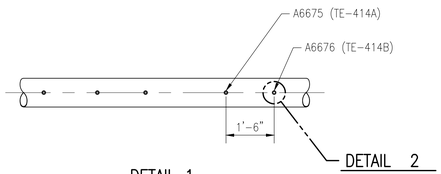

DETAIL 1
SCALE: 1/2"=1'-0"

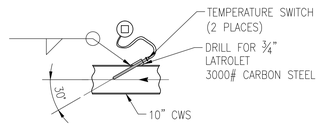

DETAIL 2
SCALE: 1/2"=1'-0"

SYM	ZONE	DESCRIPTION	DATE	APPROVED
		REVISIONS		

JACOBS
Jacobs Technology Inc.

SIGNATURES		DATE
DRAWN	MIKE VANHOOSE	3/07/14
CHECKED	BRIAN GODFREY	3/07/14
SUBMITTED	RAVI MUTHIAH	3/07/14
ST OF LICENSURE: FL LICENSE NO: 68076		
APPROVED	GLEN WARD	3/07/14
	DREW GILLESPIE	3/07/14

NATIONAL AERONAUTICS AND SPACE ADMINISTRATION
JOHN F. KENNEDY SPACE CENTER, NASA
KENNEDY SPACE CENTER, FLORIDA

KSC LAUNCH PAD 39-B
ENVIRONMENTAL CONTROL SYSTEM (ECS) REFURBISHMENT

ECS ROOM PIPING
SECTIONS, DETAILS AND ISOMETRIC

M-036

FILE NO.	SIZE	DWG.NO.	REV
	F	79K39602	

PCN. NO. 98898 SHEET 39 OF 187

P:\95452\DRAWINGS\PROC\M-036.DWG
06-FEB-2014 21:43
RHEAJE

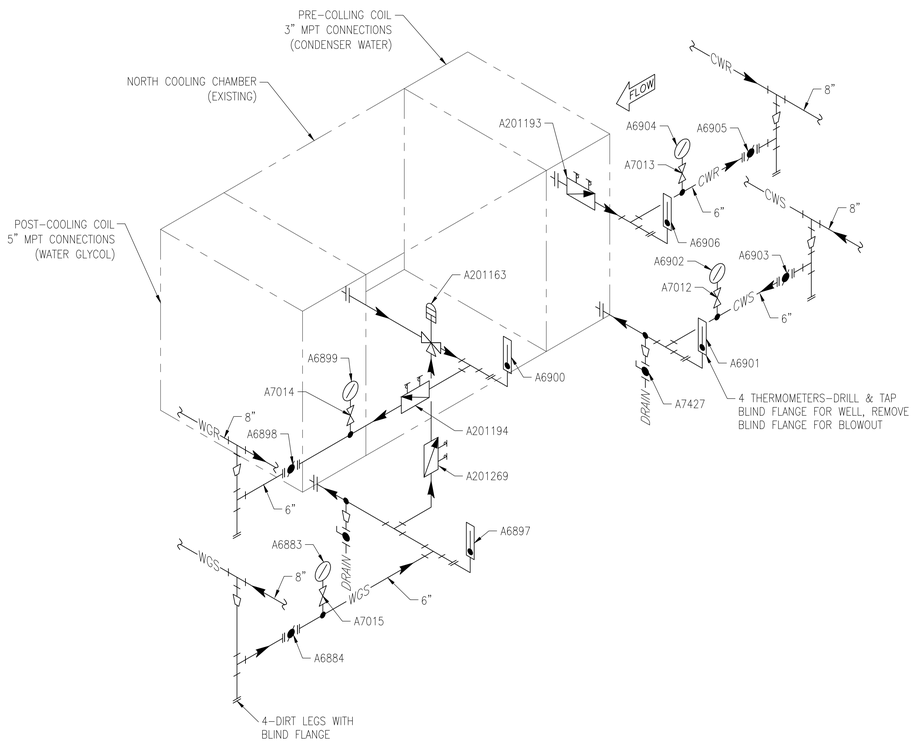

NORTH COOLING COIL CHAMBER PIPING
SCALE: NONE

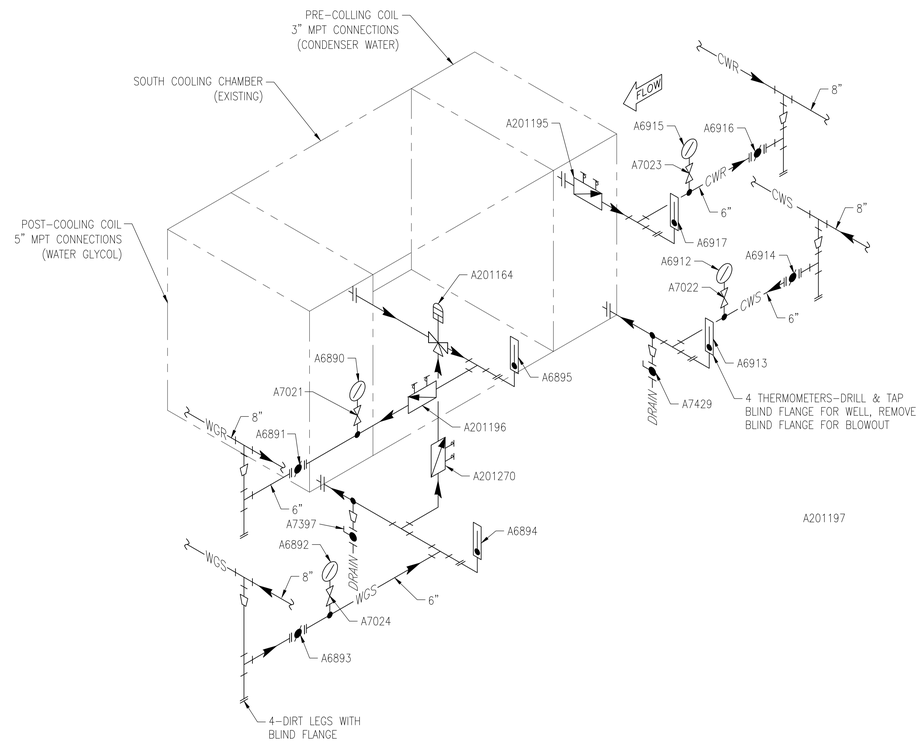

SOUTH COOLING COIL CHAMBER PIPING
SCALE: NONE

NOTES:

1. SEE DRAWINGS M-028, M-029, AND M-030 FOR SCHEMATICS.
2. SEE DRAWING M-031, M-032, M-033, AND M-046 FOR EQUIPMENT SCHEDULES.
3. THE CONTRACTOR SHALL CONFIGURE PIPING AS REQUIRED TO FIT VARYING INLETS/OUTLETS IF DIFFERENT COMPONENTS ARE UTILIZED.

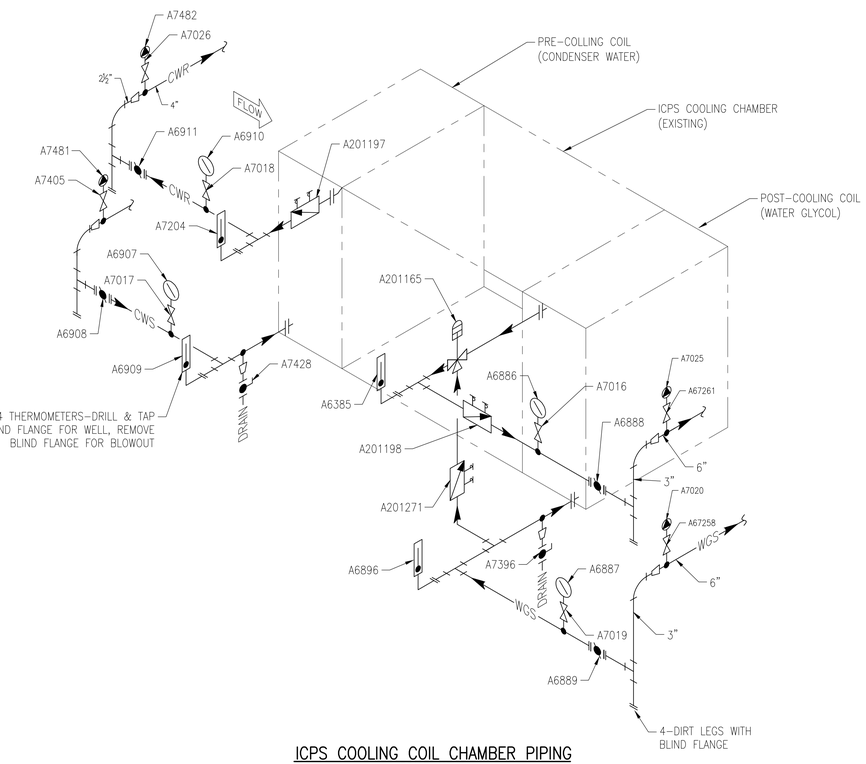

ICPS COOLING COIL CHAMBER PIPING
SCALE: NONE

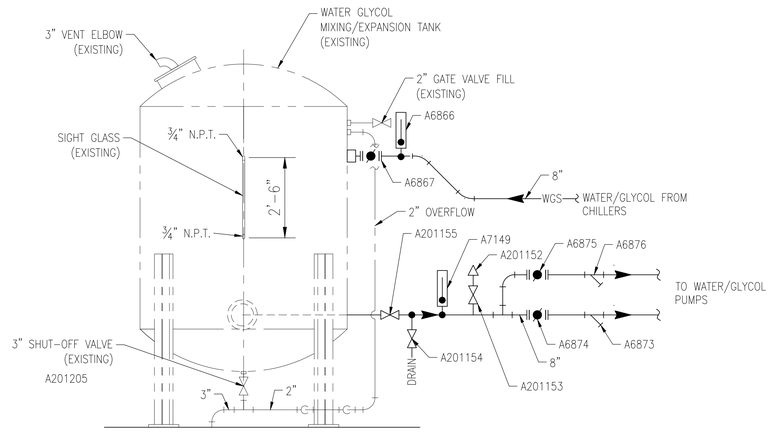

PIPING AT WATER/GLYCOL TANK
SCALE: 1/2"=1'-0"

SYM	ZONE	DESCRIPTION	DATE	APPROVED
REVISIONS				

JACOBS
Jacobs Technology Inc.

SIGNATURES		DATE
DRAWN	MIKE VANHOOSE	3/07/14
CHECKED	BRIAN GODFREY	3/07/14
SUBMITTED	RAVI MUTHIAH	3/07/14
ST OF LICENSURE: FL LICENSE NO: 68076		
APPROVED	GLEN WARD	3/07/14
	DREW GILLESPIE	3/07/14

NATIONAL AERONAUTICS AND SPACE ADMINISTRATION
JOHN F. KENNEDY SPACE CENTER, NASA
KENNEDY SPACE CENTER, FLORIDA

KSC LAUNCH PAD 39-B
ENVIRONMENTAL CONTROL SYSTEM (ECS) REFURBISHMENT
ECS ROOM PIPING
SECTIONS, DETAILS AND ISOMETRIC
CONTINUED

M-037

FILE NO.	SIZE	DWG.NO.	REV
	F	79K39602	

PCN. NO. 98898 SHEET 40 OF 187

P:\95452\DRAWINGS\PROC\M-037.DWG 20-DEC-2013 09:11 HARDHOR

NOTES:

1. NOT USED.
2. NOT USED.
3. NOT USED.
4. DEMOLISH ALL HATCHED STEAM BOILERS, WATER CONDITIONER, CONDENSER PUMPS, AND STEAM & CONDENSATE PIPING.
5. HUMIDIFIERS ARE REMOVED WITH THE CIRCUIT DUCTS DURING CIRCUIT DEMOLITION.
6. SEE DRAWINGS V-003 AND V-004 FOR HAZARDOUS MATERIALS SCHEDULE AND LOCATIONS.

AFT HEATER
HUMIDIFIER
¾"
CONDENSATE PUMP
PAYLOAD BAY HEATER
NORTH BOILER
1"
1¼"
1½"
CABIN HEATER
2" STEAM HEADER
½"
SOUTH BOILER
PCR HEATER
2"
FLOOR DRAIN
LPAC HEATER
¾" PVC BOILER FEED WATER
WATER CONDITIONER

LEGEND:

DEMO

ECS ROOM STEAM PLAN

SCALE: 1/4"=1'-0"

SYM	ZONE	DESCRIPTION	DATE	APPROVED
REVISIONS				

JACOBS
Jacobs Technology Inc.

SIGNATURES		DATE
DRAWN	MIKE VANHOOSE	3/07/14
CHECKED	BRETT DACOSTA	3/07/14
SUBMITTED	RAVI MUTHIAH	3/07/14
ST OF LICENSURE: FL LICENSE NO: 68076		
APPROVED	GLEN WARD	3/07/14
	DREW GILLESPIE	3/07/14

NATIONAL AERONAUTICS AND SPACE ADMINISTRATION
JOHN F. KENNEDY SPACE CENTER, NASA
KENNEDY SPACE CENTER, FLORIDA

KSC LAUNCH PAD 39-B
ENVIRONMENTAL CONTROL SYSTEM (ECS) REFURBISHMENT

BOILER AND STEAM PIPING - DEMOLITION

M-038

FILE NO.	SIZE	DWG.NO.	REV
	F	79K39602	

PCN. NO. 98898 SHEET 41 OF 187

P:\95452\DRAWINGS\PROC\M-038.DWG
20-DEC-2013 14:28
TOWNSEJH

NOTES:

1. NOT USED.
2. NOT USED.
3. NOT USED.
4. SEE DRAWING M-042 FOR PLAN VIEW.
5. PROVIDE AND INSTALL ELECTRIC STEAM BOILER.
6. PROVIDE AND INSTALL DUAL SOLENOID VALVES FOR REDUNDANCY.
7. PROVIDE AND INSTALL REDUNDANT SOLENOID VALVE AND FLOW CONTROL VALVE.
8. PROVIDE AND INSTALL DUAL STEAM TRAPS FOR REDUNDANCY.
9. PROVIDE AND INSTALL STEAM, CONDENSATE, AND FEED WATER PIPING AND COMPONENTS.
10. PROVIDE AND INSTALL WATER SOFTENER, SEDIMENT FILTERS, CARBON FILTRATION, CONDENSATE PUMPS, FLOOR DRAINS, AND OTHER COMPONENTS AS APPLICABLE.
11. SEE DRAWINGS M-041, M-045, AND M-046 FOR EQUIPMENT SCHEDULES.
12. PROVIDE BACKWASH FROM WATER SOFTENER TO OUTSIDE STORAGE AND ALL NECESSARY COMPONENTS.

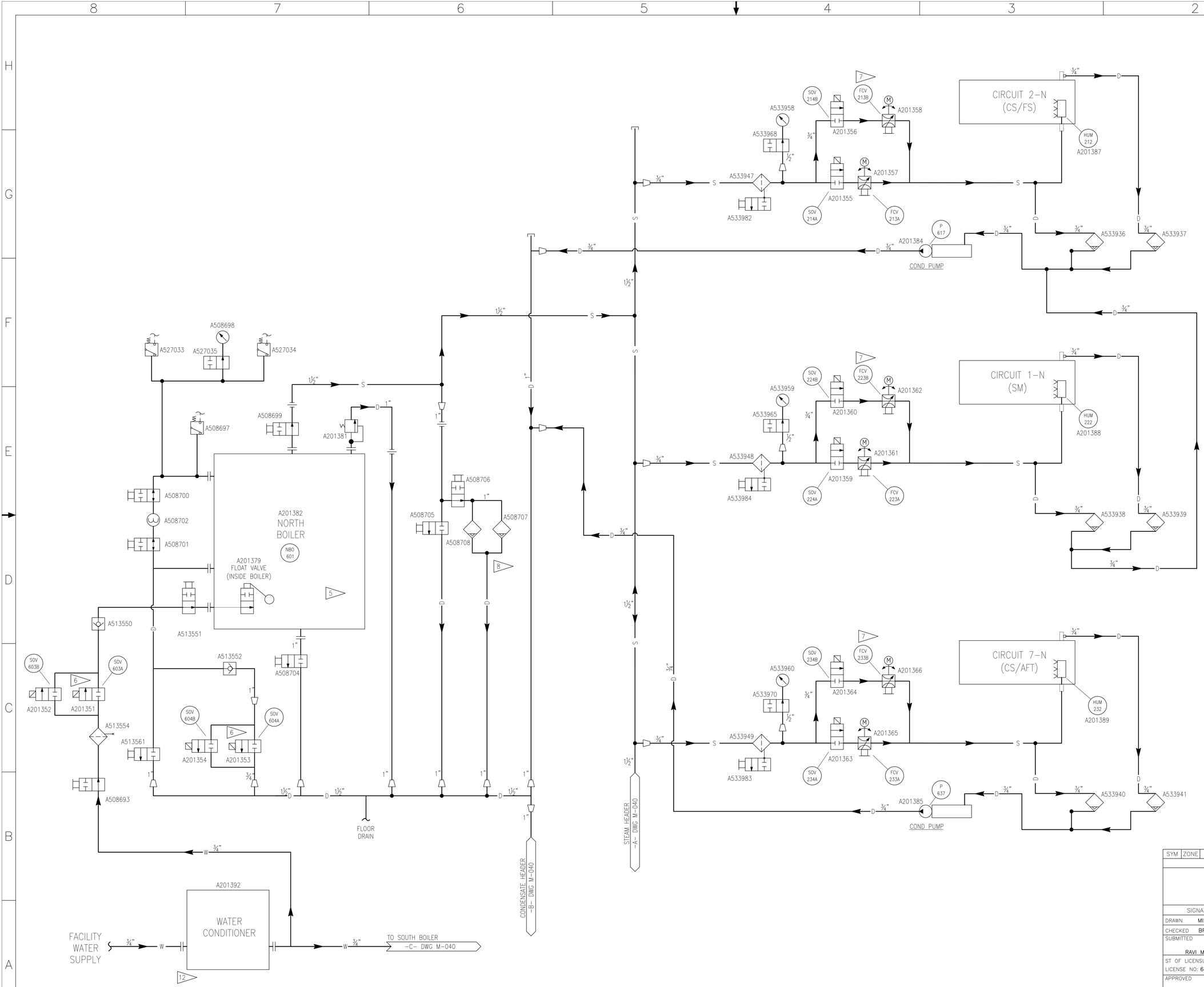

SYM	ZONE	DESCRIPTION	DATE	APPROVED
		REVISIONS		

JACOBS
Jacobs Technology Inc.

SIGNATURES		DATE
DRAWN	MIKE VANHOOSE	3/07/14
CHECKED	BRETT DACOSTA	3/07/14
SUBMITTED	RAVI MUTHIAH	3/07/14
ST OF LICENSURE: FL LICENSE NO: 68076		
APPROVED	GLEN WARD	3/07/14
	DREW GILLESPIE	3/07/14

NATIONAL AERONAUTICS AND SPACE ADMINISTRATION
JOHN F. KENNEDY SPACE CENTER, NASA
KENNEDY SPACE CENTER, FLORIDA

KSC LAUNCH PAD 39-B
ENVIRONMENTAL CONTROL SYSTEM (ECS) REFURBISHMENT
BOILER AND STEAM
SCHEMATIC

M-039

FILE NO.	SIZE	DWG.NO.	REV
	F	79K39602	
PCN. NO. 98898		SHEET 42 OF 187	

P:\95452\DRAWINGS\PROC\M-039.DWG
19-DEC-2013 22:44
RICHARCW

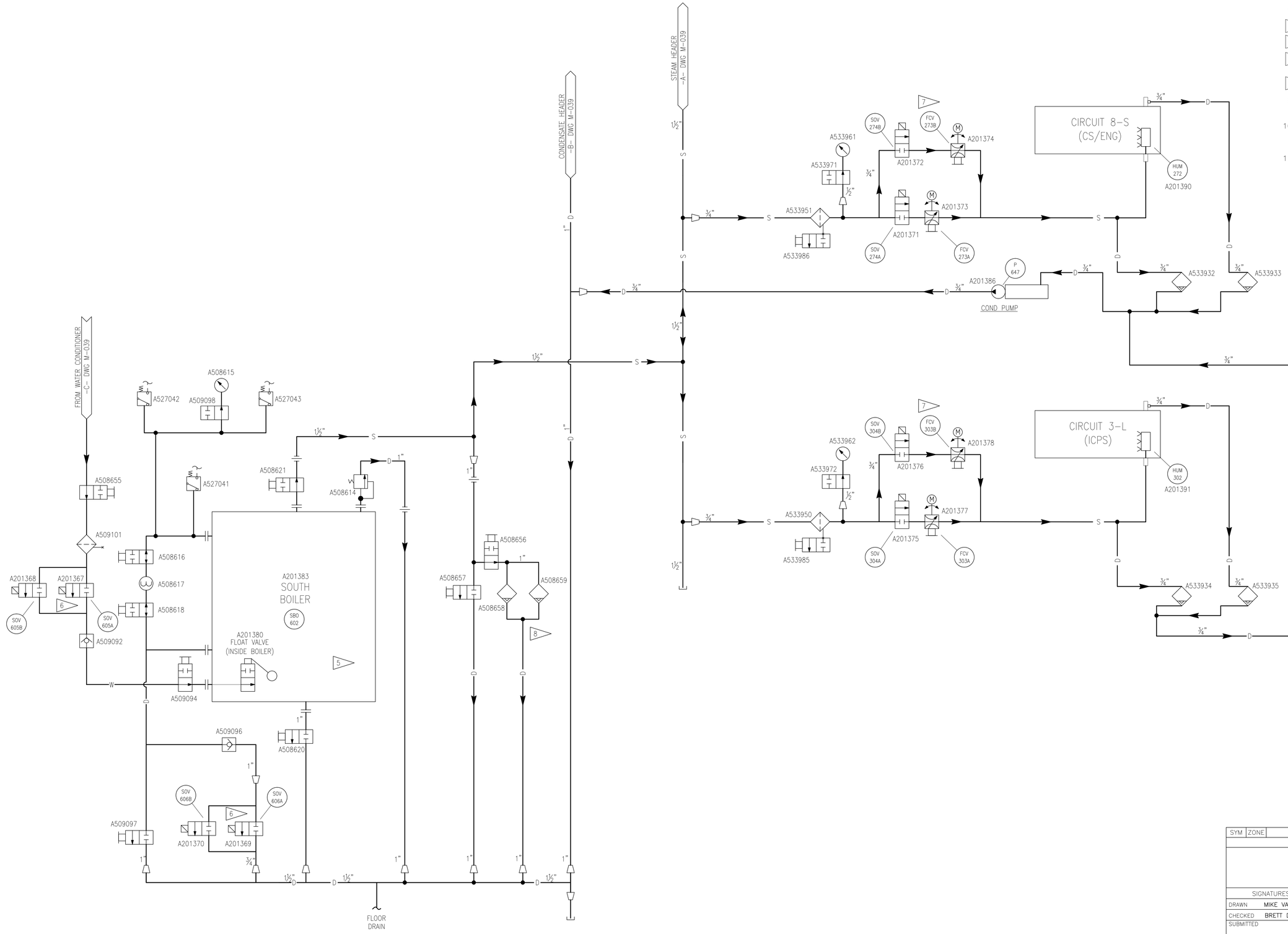

NOTES:

1. NOT USED.
2. NOT USED.
3. NOT USED.
4. SEE DRAWING M-042 FOR PLAN VIEW.
5. PROVIDE AND INSTALL ELECTRIC STEAM BOILER.
6. PROVIDE AND INSTALL DUAL SOLENOID VALVES FOR REDUNDANCY.
7. PROVIDE AND INSTALL REDUNDANT SOLENOID VALVE AND FLOW CONTROL VALVE.
8. PROVIDE AND INSTALL DUAL STEAM TRAPS FOR REDUNDANCY.
9. PROVIDE AND INSTALL STEAM, CONDENSATE, AND FEED WATER PIPING AND COMPONENTS.
10. PROVIDE AND INSTALL WATER SOFTENER, SEDIMENT FILTERS, CARBON FILTRATION, CONDENSATE PUMPS, FLOOR DRAINS, AND OTHER COMPONENTS AS APPLICABLE.
11. SEE DRAWINGS M-041, M-045, AND M-046 FOR EQUIPMENT SCHEDULES.

SYM	ZONE	DESCRIPTION	DATE	APPROVED
REVISIONS				

JACOBS
Jacobs Technology Inc.

SIGNATURES		DATE
DRAWN	MIKE VANHOOSE	3/07/14
CHECKED	BRETT DACOSTA	3/07/14
SUBMITTED	RAVI MUTHIAH	3/07/14
ST OF LICENSURE: FL LICENSE NO: 68076		
APPROVED	GLEN WARD	3/07/14
	DREW GILLESPIE	3/07/14

NATIONAL AERONAUTICS AND SPACE ADMINISTRATION
JOHN F. KENNEDY SPACE CENTER, NASA
KENNEDY SPACE CENTER, FLORIDA

KSC LAUNCH PAD 39-B
ENVIRONMENTAL CONTROL SYSTEM (ECS) REFURBISHMENT

BOILER AND STEAM SCHEMATIC CONTINUED

M-040

FILE NO.	SIZE	DWG.NO.	REV
	F	79K39602	
PCN. NO. 98898		SHEET 43 OF 187	

P:\95452\DRAWINGS\PROC\M-040.DWG 19-DEC-2013 22:32 RICHARCW

STEAM BOILER SCHEDULE

A NO.	DEVICE NO.	DESCRIPTION	REMARKS
A201382	NBO-601	BOILER	A508696 IS REMOVED / SEE M-045
A201383	SBO-602	BOILER	A508613 IS REMOVED / SEE M-045
A201384	P-617	CONDENSATE PUMP	A533924 IS REMOVED / SEE M-046
A201385	P-637	CONDENSATE PUMP	A533988 IS REMOVED / SEE M-046
A201386	P-647	CONDENSATE PUMP	A533987 IS REMOVED / SEE M-046
A201392		A STAND ALONE WATER CONDITIONER INCLUDES DUPLEX FEED WATER SYSTEM, IDP-CR3-3K, TWIN WATER SOFTNER, MODEL FSE-30-1-ED, AND BLOWDOWN SEPARATOR, MODEL A20B OR APPROVED EQUAL. SYSTEM SHALL INCLUDE SEDIMENT FILTERS AND CARBON FILTERATION	A533923 IS REMOVED / PROVIDED WITH BOILER SYSTEM. SEE M-045
A508614		PRESSURE RELIEF VALVE	PROVIDED WITH SBO-602 BOILER
A508615		PRESSURE GAUGE, ASHCROFT PROCESS PRESSURE GAUGE TYPE 1259, ASME B 40.1 GRADE 2A OR APPROVED EQUAL, +/- 0.5% OF SPAN, PRESSURE RANGE FROM 0 TO 30 PSI	
A508616		ISOLATION VALVE, 1" WATTS SERIES GV BRONZE GATE VALVE OR APPROVED EQUAL	
A508617		SIGHT GLASS	PROVIDED WITH SBO-602 BOILER
A508618		ISOLATION VALVE, 1" WATTS SERIES GV BRONZE GATE VALVE OR APPROVED EQUAL	
A508620		ISOLATION VALVE, 1" WATTS SERIES GV BRONZE GATE VALVE OR APPROVED EQUAL	
A508621		ISOLATION VALVE, 1 1/2" WATTS SERIES GV BRONZE GATE VALVE OR APPROVED EQUAL	
A508655		ISOLATION VALVE, 3/4" WATTS SERIES GV BRONZE GATE VALVE OR APPROVED EQUAL	
A508656		ISOLATION VALVE, 1" WATTS SERIES GV BRONZE GATE VALVE OR APPROVED EQUAL	
A508657		ISOLATION VALVE, 1" WATTS SERIES GV BRONZE GATE VALVE OR APPROVED EQUAL	
A508658		STEAM TRAP, SPIRAX SARCO 1" MODEL FT-15 FLOAT & THERMOSTATIC TRAP OR APPROVED EQUAL, CAST IRON BODY	
A508659		STEAM TRAP, SPIRAX SARCO 1" MODEL FT-15 FLOAT & THERMOSTATIC TRAP OR APPROVED EQUAL, CAST IRON BODY	
A508693		ISOLATION VALVE, 3/4" WATTS SERIES GV BRONZE GATE VALVE OR APPROVED EQUAL	
A508697		PRESSURE SWITCH	PROVIDED WITH NBO-601 BOILER
A508698		PRESSURE GAUGE, ASHCROFT PROCESS PRESSURE GAUGE TYPE 1259, ASME B 40.1 GRADE 2A OR APPROVED EQUAL, +/- 0.5% OF SPAN, PRESSURE RANGE FROM 0 TO 30 PSI	
A508699		ISOLATION VALVE, 1 1/2" WATTS SERIES GV BRONZE GATE VALVE OR APPROVED EQUAL	
A508700		ISOLATION VALVE, 1" WATTS SERIES GV BRONZE GATE VALVE OR APPROVED EQUAL	
A508701		ISOLATION VALVE, 1" WATTS SERIES GV BRONZE GATE VALVE OR APPROVED EQUAL	
A508702		SIGHT GLASS	PROVIDED WITH NBO-601 BOILER
A508704		ISOLATION VALVE, 1" WATTS SERIES GV BRONZE GATE VALVE OR APPROVED EQUAL	
A508705		ISOLATION VALVE, 1" WATTS SERIES GV BRONZE GATE VALVE OR APPROVED EQUAL	
A508706		ISOLATION VALVE, 1" WATTS SERIES GV BRONZE GATE VALVE OR APPROVED EQUAL	
A508707		STEAM TRAP, SPIRAX SARCO 1" MODEL FT-15 FLOAT & THERMOSTATIC TRAP OR APPROVED EQUAL, CAST IRON BODY	
A508708		STEAM TRAP, SPIRAX SARCO 1" MODEL FT-15 FLOAT & THERMOSTATIC TRAP OR APPROVED EQUAL, CAST IRON BODY	
A509092		CHECK VALVE, POWELL FIG NO. 578 OR APPROVED EQUAL, 3/4" THREADED BRONZE SWING CHECK VALVE	
A509094		ISOLATION VALVE, 3/4" WATTS SERIES GV BRONZE GATE VALVE OR APPROVED EQUAL	
A509096		CHECK VALVE, POWELL FIG NO. 578 OR APPROVED EQUAL, 1" THREADED BRONZE SWING CHECK VALVE	
A509097		ISOLATION VALVE, 1" WATTS SERIES GV BRONZE GATE VALVE OR APPROVED EQUAL	
A509098		ISOLATION VALVE, 1" WATTS SERIES GV BRONZE GATE VALVE OR APPROVED EQUAL	
A509101		STRAINER, SPIRAX SARCO 3/4" MODEL BT OR APPROVED EQUAL, BRONZE BODY, 20 MESH 304SS SCREEN, THREADED CONNECTIONS	
A513550		CHECK VALVE, POWELL FIG NO. 578 OR APPROVED EQUAL, 3/4" THREADED BRONZE SWING CHECK VALVE	
A513551		ISOLATION VALVE, 3/4" WATTS SERIES GV BRONZE GATE VALVE OR APPROVED EQUAL	
A513552		CHECK VALVE, POWELL FIG NO. 578 OR APPROVED EQUAL, 1" THREADED BRONZE SWING CHECK VALVE	
A513554		STRAINER, SPIRAX SARCO 3/4" MODEL BT OR APPROVED EQUAL, BRONZE BODY, 20 MESH 304SS SCREEN, THREADED CONNECTIONS	
A513561		ISOLATION VALVE, 1" WATTS SERIES GV BRONZE GATE VALVE OR APPROVED EQUAL	
A527033		PRESSURE SWITCH	PROVIDED WITH NBO-601 BOILER
A527034		PRESSURE SWITCH	PROVIDED WITH NBO-601 BOILER
A527035		ISOLATION VALVE, 1" WATTS SERIES GV BRONZE GATE VALVE OR APPROVED EQUAL	
A527041		PRESSURE SWITCH	PROVIDED WITH SBO-602 BOILER
A527042		PRESSURE SWITCH	PROVIDED WITH SBO-602 BOILER
A527043		PRESSURE SWITCH	PROVIDED WITH SBO-602 BOILER
A533932		STEAM TRAP, SPIRAX SARCO 3/4" MODEL FT-15 FLOAT & THERMOSTATIC TRAP OR APPROVED EQUAL, CAST IRON BODY	
A533933		STEAM TRAP, SPIRAX SARCO 3/4" MODEL FT-15 FLOAT & THERMOSTATIC TRAP OR APPROVED EQUAL, CAST IRON BODY	
A533934		STEAM TRAP, SPIRAX SARCO 3/4" MODEL FT-15 FLOAT & THERMOSTATIC TRAP OR APPROVED EQUAL, CAST IRON BODY	
A533935		STEAM TRAP, SPIRAX SARCO 3/4" MODEL FT-15 FLOAT & THERMOSTATIC TRAP OR APPROVED EQUAL, CAST IRON BODY	
A533936		STEAM TRAP, SPIRAX SARCO 3/4" MODEL FT-15 FLOAT & THERMOSTATIC TRAP OR APPROVED EQUAL, CAST IRON BODY	
A533937		STEAM TRAP, SPIRAX SARCO 3/4" MODEL FT-15 FLOAT & THERMOSTATIC TRAP OR APPROVED EQUAL, CAST IRON BODY	
A533938		STEAM TRAP, SPIRAX SARCO 3/4" MODEL FT-15 FLOAT & THERMOSTATIC TRAP OR APPROVED EQUAL, CAST IRON BODY	
A533939		STEAM TRAP, SPIRAX SARCO 3/4" MODEL FT-15 FLOAT & THERMOSTATIC TRAP OR APPROVED EQUAL, CAST IRON BODY	
A533940		STEAM TRAP, SPIRAX SARCO 3/4" MODEL FT-15 FLOAT & THERMOSTATIC TRAP OR APPROVED EQUAL, CAST IRON BODY	
A533941		STEAM TRAP, SPIRAX SARCO 3/4" MODEL FT-15 FLOAT & THERMOSTATIC TRAP OR APPROVED EQUAL, CAST IRON BODY	
A533947		STRAINER, SPIRAX SARCO 3/4" MODEL BT OR APPROVED EQUAL, BRONZE BODY, 20 MESH 304SS SCREEN, THREADED CONNECTIONS	
A533948		STRAINER, SPIRAX SARCO 3/4" MODEL BT OR APPROVED EQUAL, BRONZE BODY, 20 MESH 304SS SCREEN, THREADED CONNECTIONS	
A533949		STRAINER, SPIRAX SARCO 3/4" MODEL BT OR APPROVED EQUAL, BRONZE BODY, 20 MESH 304SS SCREEN, THREADED CONNECTIONS	

STEAM BOILER SCHEDULE CONTINUED

A NO.	DEVICE NO.	DESCRIPTION	REMARKS
A533950		STRAINER, SPIRAX SARCO 3/4" MODEL BT OR APPROVED EQUAL, BRONZE BODY, 20 MESH 304SS SCREEN, THREADED CONNECTIONS	
A533951		STRAINER, SPIRAX SARCO 3/4" MODEL BT OR APPROVED EQUAL, BRONZE BODY, 20 MESH 304SS SCREEN, THREADED CONNECTIONS	
A533958		PRESSURE GAUGE, ASHCROFT PROCESS PRESSURE GAUGE TYPE 1259, ASME B 40.1 GRADE 2A OR APPROVED EQUAL, +/- 0.5% OF SPAN, PRESSURE RANGE FROM 0 TO 30 PSI	
A533959		PRESSURE GAUGE, ASHCROFT PROCESS PRESSURE GAUGE TYPE 1259, ASME B 40.1 GRADE 2A OR APPROVED EQUAL, +/- 0.5% OF SPAN, PRESSURE RANGE FROM 0 TO 30 PSI	
A533960		PRESSURE GAUGE, ASHCROFT PROCESS PRESSURE GAUGE TYPE 1259, ASME B 40.1 GRADE 2A OR APPROVED EQUAL, +/- 0.5% OF SPAN, PRESSURE RANGE FROM 0 TO 30 PSI	
A533961		PRESSURE GAUGE, ASHCROFT PROCESS PRESSURE GAUGE TYPE 1259, ASME B 40.1 GRADE 2A OR APPROVED EQUAL, +/- 0.5% OF SPAN, PRESSURE RANGE FROM 0 TO 30 PSI	
A533962		PRESSURE GAUGE, ASHCROFT PROCESS PRESSURE GAUGE TYPE 1259, ASME B 40.1 GRADE 2A OR APPROVED EQUAL, +/- 0.5% OF SPAN, PRESSURE RANGE FROM 0 TO 30 PSI	
A533965		BLOCK AND BLEED VALVE, 1/2" ANDERSON GREENWOOD MODEL M9 OR APPROVED EQUAL	
A533968		BLOCK AND BLEED VALVE, 1/2" ANDERSON GREENWOOD MODEL M9 OR APPROVED EQUAL	
A533970		BLOCK AND BLEED VALVE, 1/2" ANDERSON GREENWOOD MODEL M9 OR APPROVED EQUAL	
A533971		BLOCK AND BLEED VALVE, 1/2" ANDERSON GREENWOOD MODEL M9 OR APPROVED EQUAL	
A533972		BLOCK AND BLEED VALVE, 1/2" ANDERSON GREENWOOD MODEL M9 OR APPROVED EQUAL	
A533982		DRAIN VALVE, 3/4" WATTS SERIES GV BRONZE GATE VALVE OR APPROVED EQUAL	
A533983		DRAIN VALVE, 3/4" WATTS SERIES GV BRONZE GATE VALVE OR APPROVED EQUAL	
A533984		DRAIN VALVE, 3/4" WATTS SERIES GV BRONZE GATE VALVE OR APPROVED EQUAL	
A533985		DRAIN VALVE, 3/4" WATTS SERIES GV BRONZE GATE VALVE OR APPROVED EQUAL	
A533986		DRAIN VALVE, 3/4" WATTS SERIES GV BRONZE GATE VALVE OR APPROVED EQUAL	
A201351	SOV-603A	SOLENOID VALVE	SEE M-046
A201352	SOV-603B	SOLENOID VALVE	SEE M-046
A201353	SOV-604A	SOLENOID VALVE	SEE M-046
A201354	SOV-604B	SOLENOID VALVE	SEE M-046
A201355	SOV-214A	SOLENOID VALVE	SEE M-046
A201356	SOV-214B	SOLENOID VALVE	SEE M-046
A201357	FCV-213A	FLOW CONTROL VALVE	SEE M-046
A201358	FCV-213B	FLOW CONTROL VALVE	SEE M-046
A201359	SOV-224A	SOLENOID VALVE	SEE M-046
A201360	SOV-224B	SOLENOID VALVE	SEE M-046
A201361	FCV-223A	FLOW CONTROL VALVE	SEE M-046
A201362	FCV-223B	FLOW CONTROL VALVE	SEE M-046
A201363	SOV-234A	SOLENOID VALVE	SEE M-046
A201364	SOV-234B	SOLENOID VALVE	SEE M-046
A201365	FCV-233A	FLOW CONTROL VALVE	SEE M-046
A201366	FCV-233B	FLOW CONTROL VALVE	SEE M-046
A201367	SOV-605A	SOLENOID VALVE	SEE M-046
A201368	SOV-605B	SOLENOID VALVE	SEE M-046
A201369	SOV-606A	SOLENOID VALVE	SEE M-046
A201370	SOV-606B	SOLENOID VALVE	SEE M-046
A201371	SOV-274A	SOLENOID VALVE	SEE M-046
A201372	SOV-274B	SOLENOID VALVE	SEE M-046
A201373	FCV-273A	FLOW CONTROL VALVE	SEE M-046
A201374	FCV-273B	FLOW CONTROL VALVE	SEE M-046
A201375	SOV-304A	SOLENOID VALVE	SEE M-046
A201376	SOV-304B	SOLENOID VALVE	SEE M-046
A201377	FCV-303A	FLOW CONTROL VALVE	SEE M-046
A201378	FCV-303B	FLOW CONTROL VALVE	SEE M-046
A201379		FLOAT VALVE	PROVIDED WITH NBO-601 BOILER
A201380		FLOAT VALVE	PROVIDED WITH SBO-602 BOILER
A201381		PRESSURE RELIEF VALVE	PROVIDED WITH NBO-601 BOILER
A201387	HUM-212	HUMIDIFIER	SEE M-045
A201388	HUM-222	HUMIDIFIER	SEE M-045
A201389	HUM-232	HUMIDIFIER	SEE M-045
A201390	HUM-272	HUMIDIFIER	SEE M-045
A201391	HUM-302	HUMIDIFIER	SEE M-045
A201265	BFP-1	BACKFLOW PREVENTER, WATTS SERIES 007, MODEL U0071QT-S, 2" WITH STRAINER, BRONZE BODY OR APPROVED EQUAL	
A201266	BFP-2	BACKFLOW PREVENTER, WATTS SERIES 007, MODEL U0071QT-S, 2" WITH STRAINER, BRONZE BODY OR APPROVED EQUAL	

SYM	ZONE	DESCRIPTION	DATE	APPROVED

REVISIONS

JACOBS
Jacobs Technology Inc.

SIGNATURES	DATE
DRAWN MIKE VANHOOSE	3/07/14
CHECKED BRETT DACOSTA	3/07/14
SUBMITTED RAVI MUTHIAH	3/07/14
ST OF LICENSURE: FL LICENSE NO: 68076	
APPROVED GLEN WARD	3/07/14
DREW GILLESPIE	3/07/14

NATIONAL AERONAUTICS AND SPACE ADMINISTRATION
JOHN F. KENNEDY SPACE CENTER, NASA
KENNEDY SPACE CENTER, FLORIDA

KSC LAUNCH PAD 39-B
ENVIRONMENTAL CONTROL SYSTEM (ECS) REFURBISHMENT

BOILER AND STEAM EQUIPMENT SCHEDULE

M-041

FILE NO.	SIZE	DWG.NO.	REV
	F	79K39602	
PCN. NO. 98898		SHEET 44 OF 187	

F:\95452\DRAWINGS\PROC\M-041.DWG
07-FEB-2014 09:48
RHEAE

NOTES:

1. NOT USED.
2. NOT USED.
3. NOT USED.
4. SEE DRAWINGS M-039 AND M-040 FOR SCHEMATICS.
5. PROVIDE AND INSTALL STEAM BOILERS UNDERNEATH OF EXISTING COOLING CHAMBERS.
6. PROVIDE AND INSTALL WATER CONDITIONER.
7. SEE DRAWINGS M-041 FOR EQUIPMENT SCHEDULES.

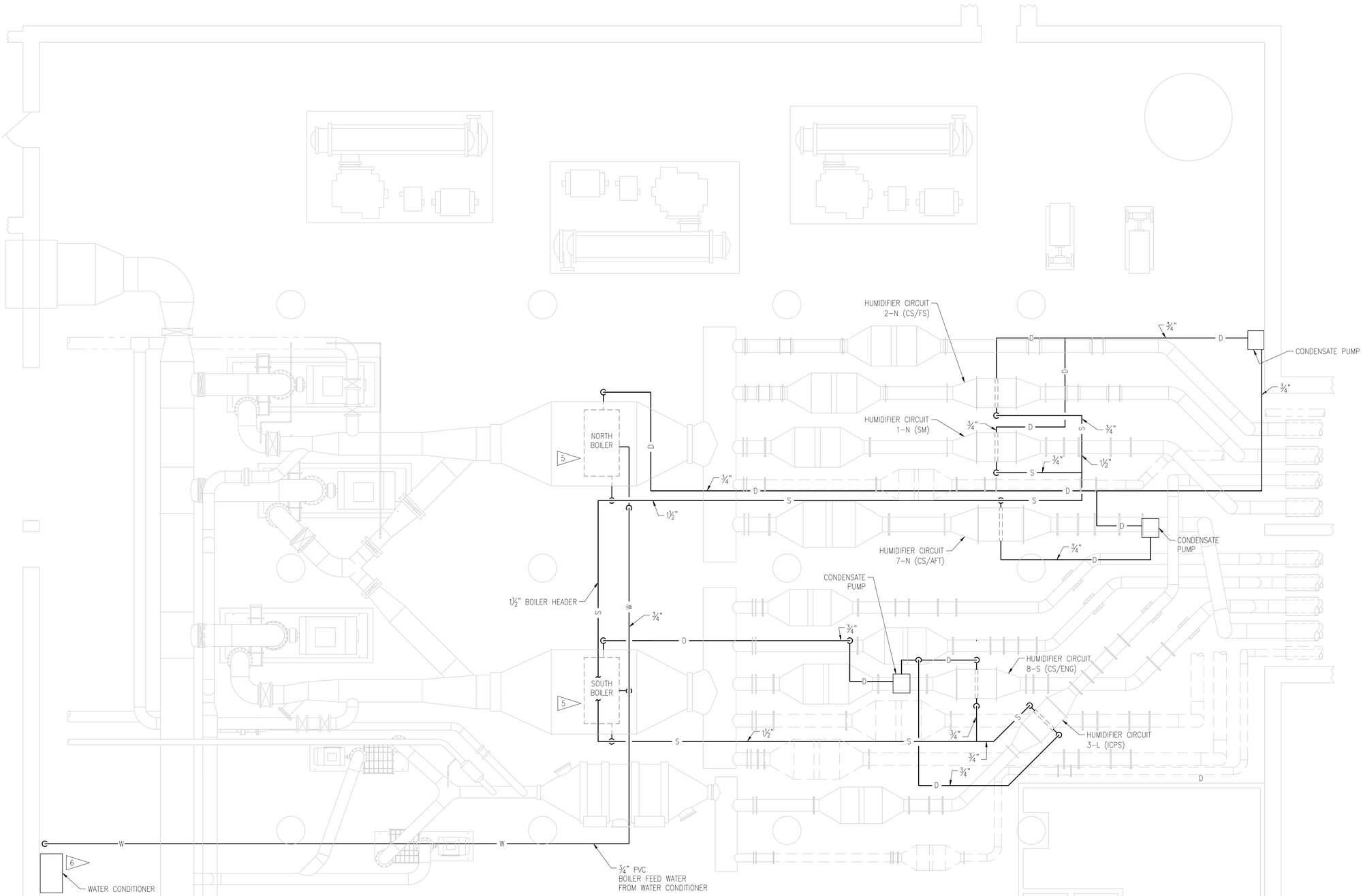

N

ECS ROOM STEAM PLAN
SCALE: 1/4" = 1'-0"

SYM	ZONE	DESCRIPTION	DATE	APPROVED
REVISIONS				

JACOBS™
Jacobs Technology Inc.

NATIONAL AERONAUTICS AND SPACE ADMINISTRATION
JOHN F. KENNEDY SPACE CENTER, NASA
KENNEDY SPACE CENTER, FLORIDA

SIGNATURES	DATE
DRAWN MIKE VANHOOSE	3/07/14
CHECKED HANNAH LYNCH	3/07/14
SUBMITTED RAVI MUTHIAH	3/07/14
ST OF LICENSURE: FL LICENSE NO: 68076	
APPROVED GLEN WARD	3/07/14
DREW GILLESPIE	3/07/14

KSC LAUNCH PAD 39-B
ENVIRONMENTAL CONTROL SYSTEM (ECS) REFURBISHMENT
BOILER AND STEAM
PLAN VIEW AND SECTIONS AND DETAILS

M-042

FILE NO.	SIZE	DWG.NO.	REV
	F	79K39602	
PCN. NO. 98898		SHEET 45 OF 187	

P:\95452\DRAWINGS\PROC\M-042.DWG
20-DEC-2013 14:24
WITHERS

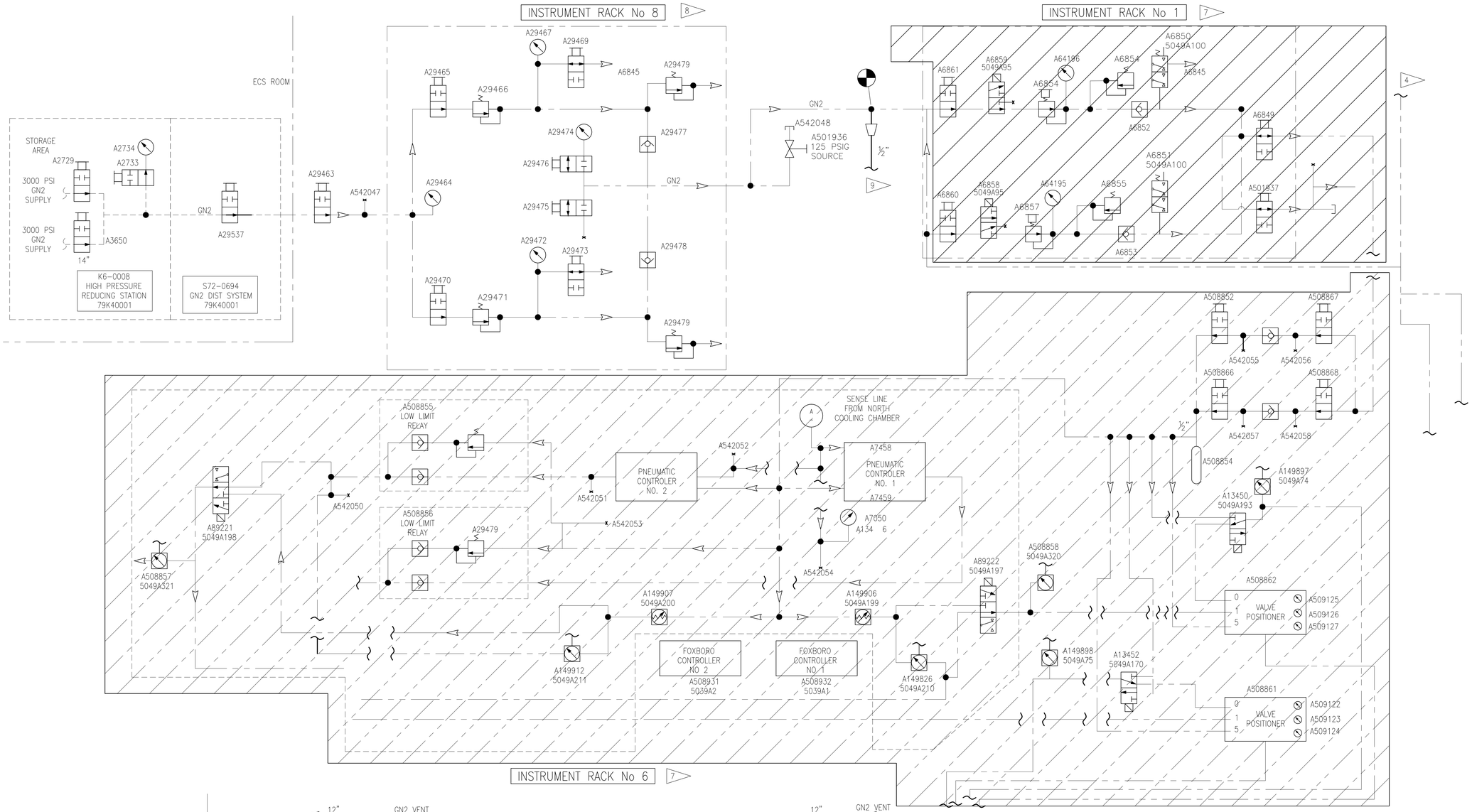

ECS ROOM GN2 SUPPLY SCHEMATIC

SCALE: NTS

NOTES:

1. NOT USED.
2. NOT USED.
3. NOT USED.
4. EXISTING CONTROL AIR FOR COOLING TOWER BYPASS VALVE IS TO REMAIN.
5. SEE DRAWING M-044 FOR NEW INSTALLATION.
6. SEE DWGS V-003 AND V-004 FOR HAZARDOUS MATERIAL SCHEDULE AND LOCATIONS.
7. DEMOLISH INSTRUMENT RACK NO. 1 AND INSTRUMENT RACK NO. 6.
8. REMOVE THE RUST ON THE PANEL AND PAINT TO MATCH EXISTING. CALIBRATE THE GAGES AND RELIEF VALVES. IF THE PANEL CANNOT BE REPAIRED, THE NASA CONTRACTING OFFICER SHALL BE NOTIFIED BEFORE FURTHER ACTION IS TAKEN.
9. PROVIDE AND INSTALL ½" GN2 LINE TO PROVIDE CONTROL AIR FOR NEW DIGITAL POSITIONERS ADDED TO EXISTING PNEUMATIC PRESSURE REGULATING VALVES.

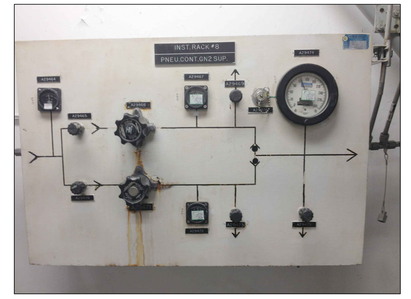

EXISTING INST. RACK #8

LEGENDS:

DEMO

SYM	ZONE	DESCRIPTION	DATE	APPROVED
		REVISIONS		

JACOBS
Jacobs Technology Inc.

NATIONAL AERONAUTICS AND SPACE ADMINISTRATION
JOHN F. KENNEDY SPACE CENTER, NASA
KENNEDY SPACE CENTER, FLORIDA

SIGNATURES	DATE
DRAWN MIKE VANHOOSE	3/07/14
CHECKED HANNAH LYNCH	3/07/14
SUBMITTED RAVI MUTHIAH	3/07/14
ST OF LICENSURE: FL LICENSE NO: 68076	
APPROVED GLEN WARD	3/07/14
DREW GILLESPIE	3/07/14

KSC LAUNCH PAD 39-B
ENVIRONMENTAL CONTROL SYSTEM (ECS) REFURBISHMENT
GN2 PRESSURE REDUCING STATION AND PIPING DEMOLITION

FILE NO.	SIZE	DWG.NO.	REV
	F	79K39602	
PCN. NO. 98898		SHEET 46 OF 187	

M-043

P:\95452\DRAWINGS\PROC\M-043.DWG
20-DEC-2013 12:13
WITHERS

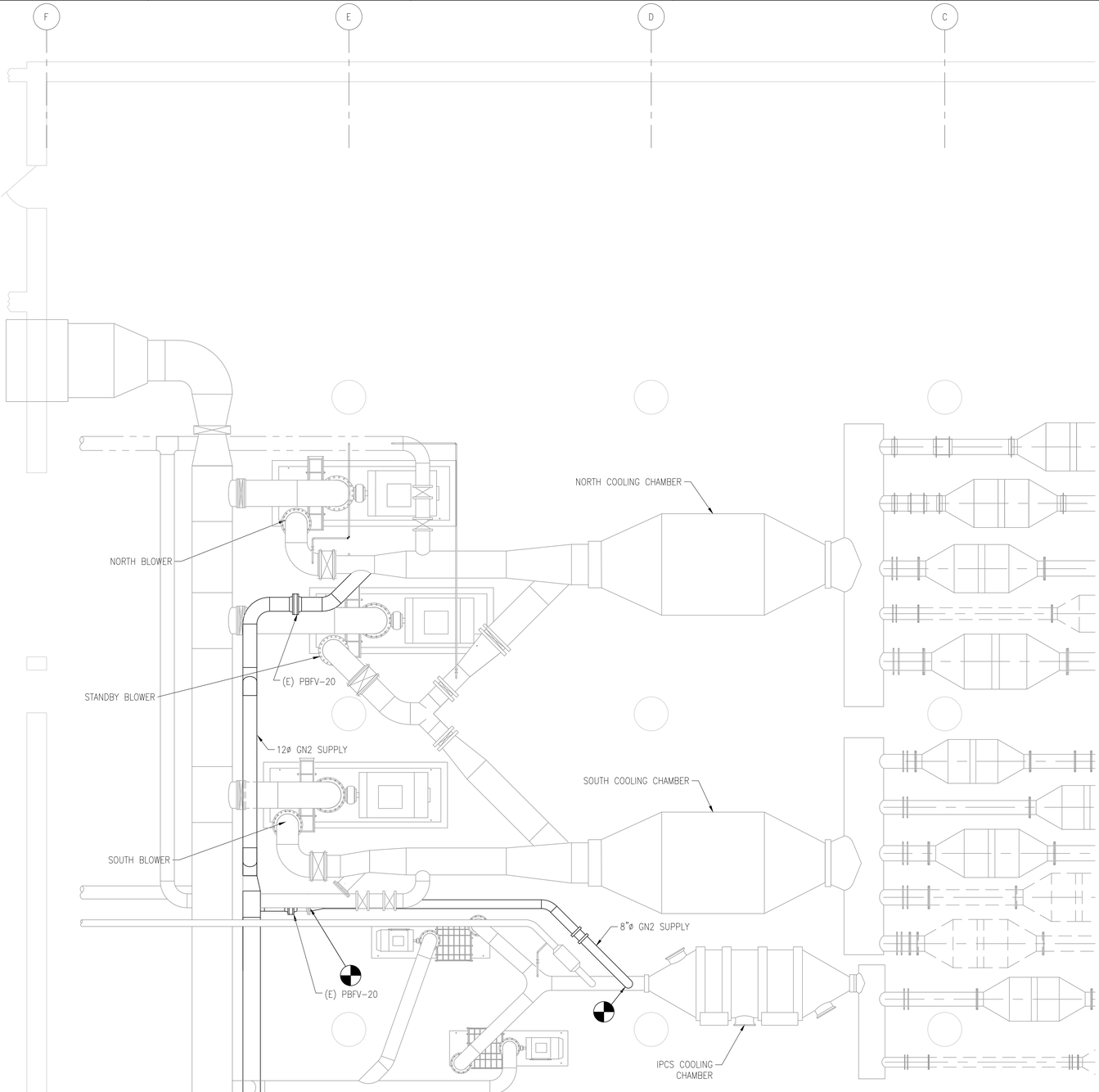

ECS ROOM GN2 SUPPLY PLAN
SCALE: 1/4"=1'-0"

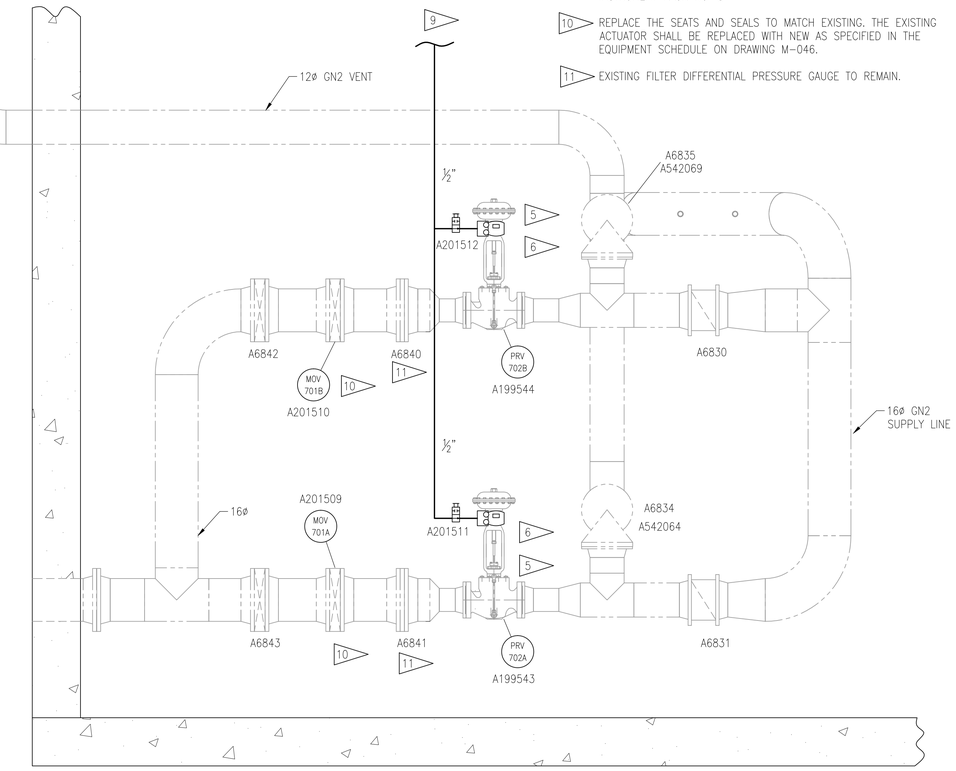

SECTION A-A
SCALE: 1/2"=1'-0"

NOTES:

1. NOT USED.
2. NOT USED.
3. NOT USED.
4. SEE DRAWING M-043 FOR GN2 SCHEMATIC DEMO.
5. REPLACE THE SEATS AND SEALS TO MATCH EXISTING. PROVIDE AND INSTALL DIGITAL POSITIONER WITH 4-20mA CONTROL SIGNALS, SETPOINT AND FEEDBACK FOR REMOTE OPERATION. THE PRESSURE REGULATING VALVE SHALL BE CALIBRATED AND CHECKED OUT FOR PROPER FUNCTION WITH NEW DIGITAL POSITIONER.
6. FIELD ROUTE 125 PSI CONTROL GN2 FOR NEW DIGITAL POSITIONER.
7. SEE DRAWINGS M-007, M-008, M-009, AND AND M-010 FOR PURGE AIR/GN2 SCHEMATICS.
8. SEE DRAWING M-046 FOR EQUIPMENT SCHEDULE.
9. NEW 125 PSI CONTROL GN2 PROVIDED FROM DOWNSTREAM OF THE INSTRUMENT RACK NO. 8.
10. REPLACE THE SEATS AND SEALS TO MATCH EXISTING. THE EXISTING ACTUATOR SHALL BE REPLACED WITH NEW AS SPECIFIED IN THE EQUIPMENT SCHEDULE ON DRAWING M-046.
11. EXISTING FILTER DIFFERENTIAL PRESSURE GAUGE TO REMAIN.

SYM	ZONE	DESCRIPTION	DATE	APPROVED

REVISIONS

JACOBS
Jacobs Technology Inc.

SIGNATURES		DATE
DRAWN	MIKE VANHOOSE	3/07/14
CHECKED	HANNAH LYNCH	3/07/14
SUBMITTED	RAVI MUTHIAH	3/07/14
ST OF LICENSURE: FL LICENSE NO: 68076		
APPROVED	GLEN WARD	3/07/14
	DREW GILLESPIE	3/07/14

NATIONAL AERONAUTICS AND SPACE ADMINISTRATION
JOHN F. KENNEDY SPACE CENTER, NASA
KENNEDY SPACE CENTER, FLORIDA

KSC LAUNCH PAD 39-B
ENVIRONMENTAL CONTROL SYSTEM (ECS) REFURBISHMENT

GN2 PRESSURE REDUCING STATION PLAN VIEW AND SECTIONS AND DETAILS

FILE NO.	SIZE	DWG.NO.	REV
	F	79K39602	
PCN. NO. 98898		SHEET 47 OF 187	

M-044

P:\39452\DRAWINGS\PROC\M-044.DWG
20-DEC-2013 13:26
RICHARCW

CONTROL VALVE SCHEDULE – PURGE AIR & GN2

A NO.	DEVICE NO.	PURPOSE	VALVE TYPE	VALVE SIZE	AIR FLOW (LBS/MIN)	PORT	BODY	FLANGE	LIMIT SWITCH	ACTUATOR TYPE	ACTUATOR V / PH @ 60 Hz	REMARKS
A199174	PCV-010B	DUMP	BUTTERFLY	12"	–	FULL	CS	150#	YES	CONTROL	120 / 1	VALVE: VANESSA SERIES 30,000 ROTARY PROCESS VALVE OR APPROVED EQUAL; ACTUATOR: BIFFI ICON 2000 ELECTRIC ACTUATOR OR APPROVED EQUAL, 120 VAC SINGLE PHASE CONTROL POWER TO MOTORIZED ACTUATOR, 4–20 mA VALVE POSITION CONTROL AND 4–20 mA POSITION FEEDBACK FOR VALVE POSITION.
A199182	PCV-014A	DUMP	BUTTERFLY	12"	–	FULL	CS	150#	YES	CONTROL	120 / 1	VALVE: VANESSA SERIES 30,000 ROTARY PROCESS VALVE OR APPROVED EQUAL; ACTUATOR: BIFFI ICON 2000 ELECTRIC ACTUATOR OR APPROVED EQUAL, 120 VAC SINGLE PHASE CONTROL POWER TO MOTORIZED ACTUATOR, 4–20 mA VALVE POSITION CONTROL AND 4–20 mA POSITION FEEDBACK FOR VALVE POSITION.
A199181	PCV-014B	DUMP	BUTTERFLY	12"	–	FULL	CS	150#	YES	CONTROL	120 / 1	VALVE: VANESSA SERIES 30,000 ROTARY PROCESS VALVE OR APPROVED EQUAL; ACTUATOR: BIFFI ICON 2000 ELECTRIC ACTUATOR OR APPROVED EQUAL, 120 VAC SINGLE PHASE CONTROL POWER TO MOTORIZED ACTUATOR, 4–20 mA VALVE POSITION CONTROL AND 4–20 mA POSITION FEEDBACK FOR VALVE POSITION.
A199217	PCV-015B	DUMP	BUTTERFLY	8"	–	FULL	CS	150#	YES	CONTROL	120 / 1	VALVE: VANESSA SERIES 30,000 ROTARY PROCESS VALVE OR APPROVED EQUAL; ACTUATOR: BIFFI ICON 2000 ELECTRIC ACTUATOR OR APPROVED EQUAL, 120 VAC SINGLE PHASE CONTROL POWER TO MOTORIZED ACTUATOR, 4–20 mA VALVE POSITION CONTROL AND 4–20 mA POSITION FEEDBACK FOR VALVE POSITION.
A199550	MOV-008	ISOLATION	BUTTERFLY	20"	1,050	FULL	CS	150#	YES	OPEN / CLOSE	120 / 1	VALVE: VANESSA SERIES 30,000 ROTARY PROCESS VALVE OR APPROVED EQUAL; ACTUATOR: BIFFI ICON 2000 ELECTRIC ACTUATOR OR APPROVED EQUAL, 120 VAC SINGLE PHASE CONTROL POWER TO MOTORIZED ACTUATOR, 120 VAC OPEN AND CLOSE CONTROL SIGNALS. FULL OPEN AND FULL CLOSE 120 VAC DRY CONTACTS FOR POSITION INDICATION.
A199552	MOV-011	ISOLATION	BUTTERFLY	20"	1,050	FULL	CS	150#	YES	OPEN / CLOSE	120 / 1	VALVE: VANESSA SERIES 30,000 ROTARY PROCESS VALVE OR APPROVED EQUAL; ACTUATOR: BIFFI ICON 2000 ELECTRIC ACTUATOR OR APPROVED EQUAL, 120 VAC SINGLE PHASE CONTROL POWER TO MOTORIZED ACTUATOR, 120 VAC OPEN AND CLOSE CONTROL SIGNALS. FULL OPEN AND FULL CLOSE 120 VAC DRY CONTACTS FOR POSITION INDICATION.
A199553	MOV-012	ISOLATION	BUTTERFLY	20"	1,050	FULL	CS	150#	YES	OPEN / CLOSE	120 / 1	VALVE: VANESSA SERIES 30,000 ROTARY PROCESS VALVE OR APPROVED EQUAL; ACTUATOR: BIFFI ICON 2000 ELECTRIC ACTUATOR OR APPROVED EQUAL, 120 VAC SINGLE PHASE CONTROL POWER TO MOTORIZED ACTUATOR, 120 VAC OPEN AND CLOSE CONTROL SIGNALS. FULL OPEN AND FULL CLOSE 120 VAC DRY CONTACTS FOR POSITION INDICATION.
A199551	MOV-013	ISOLATION	BUTTERFLY	20"	1,050	FULL	CS	150#	YES	OPEN / CLOSE	120 / 1	VALVE: VANESSA SERIES 30,000 ROTARY PROCESS VALVE OR APPROVED EQUAL; ACTUATOR: BIFFI ICON 2000 ELECTRIC ACTUATOR OR APPROVED EQUAL, 120 VAC SINGLE PHASE CONTROL POWER TO MOTORIZED ACTUATOR, 120 VAC OPEN AND CLOSE CONTROL SIGNALS. FULL OPEN AND FULL CLOSE 120 VAC DRY CONTACTS FOR POSITION INDICATION.
A199213	MOV-017	ISOLATION	BUTTERFLY	12"	250	FULL	CS	150#	YES	OPEN / CLOSE	120 / 1	VALVE: VANESSA SERIES 30,000 ROTARY PROCESS VALVE OR APPROVED EQUAL; ACTUATOR: BIFFI ICON 2000 ELECTRIC ACTUATOR OR APPROVED EQUAL, 120 VAC SINGLE PHASE CONTROL POWER TO MOTORIZED ACTUATOR, 24 VDC OPEN AND CLOSE CONTROL SIGNALS WITH 24 VDC SOURCED FROM ACTUATOR. FULL OPEN AND FULL CLOSE 24 VDC DRY CONTACTS FOR POSITION INDICATION.
A199219	MOV-018	ISOLATION	BUTTERFLY	12"	250	FULL	CS	150#	YES	OPEN / CLOSE	120 / 1	VALVE: VANESSA SERIES 30,000 ROTARY PROCESS VALVE OR APPROVED EQUAL; ACTUATOR: BIFFI ICON 2000 ELECTRIC ACTUATOR OR APPROVED EQUAL, 120 VAC SINGLE PHASE CONTROL POWER TO MOTORIZED ACTUATOR, 24 VDC OPEN AND CLOSE CONTROL SIGNALS WITH 24 VDC SOURCED FROM ACTUATOR. FULL OPEN AND FULL CLOSE 24 VDC DRY CONTACTS FOR POSITION INDICATION.
A199216	MOV-019	BLEED	BALL	3/4"	–	FULL	CS	150#	YES	OPEN / CLOSE	120 / 1	VALVE: SHARPE SERIES 50 OR APPROVED EQUAL; ACTUATOR: KEYSTONE ELECTRIC ACTUATOR OR APPROVED EQUAL, 120 VAC SINGLE PHASE CONTROL POWER TO MOTORIZED ACTUATOR, 24 VDC OPEN AND CLOSE CONTROL SIGNALS WITH 24 VDC SOURCED FROM ACTUATOR. FULL OPEN AND FULL CLOSE 24 VDC DRY CONTACTS FOR POSITION INDICATION.
A199172	MOV-020	ISOLATION	BUTTERFLY	20"	1,050	FULL	CS	150#	YES	OPEN / CLOSE	120 / 1	VALVE: VANESSA SERIES 30,000 ROTARY PROCESS VALVE OR APPROVED EQUAL; ACTUATOR: BIFFI ICON 2000 ELECTRIC ACTUATOR OR APPROVED EQUAL, 120 VAC SINGLE PHASE CONTROL POWER TO MOTORIZED ACTUATOR, 24 VDC OPEN AND CLOSE CONTROL SIGNALS WITH 24 VDC SOURCED FROM ACTUATOR. FULL OPEN AND FULL CLOSE 24 VDC DRY CONTACTS FOR POSITION INDICATION.
A199177	MOV-021	ISOLATION	BUTTERFLY	24"	1,050	FULL	CS	150#	YES	OPEN / CLOSE	120 / 1	VALVE: VANESSA SERIES 30,000 ROTARY PROCESS VALVE OR APPROVED EQUAL; ACTUATOR: BIFFI ICON 2000 ELECTRIC ACTUATOR OR APPROVED EQUAL, 120 VAC SINGLE PHASE CONTROL POWER TO MOTORIZED ACTUATOR, 24 VDC OPEN AND CLOSE CONTROL SIGNALS WITH 24 VDC SOURCED FROM ACTUATOR. FULL OPEN AND FULL CLOSE 24 VDC DRY CONTACTS FOR POSITION INDICATION.
A199258	MOV-300A	ISOLATION	BUTTERFLY	8"	50 – 75	FULL	CS	150#	YES	OPEN / CLOSE	120 / 1	VALVE: VANESSA SERIES 30,000 ROTARY PROCESS VALVE OR APPROVED EQUAL; ACTUATOR: BIFFI ICON 2000 ELECTRIC ACTUATOR OR APPROVED EQUAL, 120 VAC SINGLE PHASE CONTROL POWER TO MOTORIZED ACTUATOR, 24 VDC OPEN AND CLOSE CONTROL SIGNALS WITH 24 VDC SOURCED FROM ACTUATOR. FULL OPEN AND FULL CLOSE 24 VDC DRY CONTACTS FOR POSITION INDICATION.
A199259	MOV-300B	ISOLATION	BUTTERFLY	8"	50 – 75	FULL	CS	150#	YES	OPEN / CLOSE	120 / 1	VALVE: VANESSA SERIES 30,000 ROTARY PROCESS VALVE OR APPROVED EQUAL; ACTUATOR: BIFFI ICON 2000 ELECTRIC ACTUATOR OR APPROVED EQUAL, 120 VAC SINGLE PHASE CONTROL POWER TO MOTORIZED ACTUATOR, 24 VDC OPEN AND CLOSE CONTROL SIGNALS WITH 24 VDC SOURCED FROM ACTUATOR. FULL OPEN AND FULL CLOSE 24 VDC DRY CONTACTS FOR POSITION INDICATION.
A1993244	MOV-240A	ISOLATION	BUTTERFLY	10"	50 – 125	FULL	CS	150#	YES	OPEN / CLOSE	120 / 1	VALVE: VANESSA SERIES 30,000 ROTARY PROCESS VALVE OR APPROVED EQUAL; ACTUATOR: BIFFI ICON 2000 ELECTRIC ACTUATOR OR APPROVED EQUAL, 120 VAC SINGLE PHASE CONTROL POWER TO MOTORIZED ACTUATOR, 24 VDC OPEN AND CLOSE CONTROL SIGNALS WITH 24 VDC SOURCED FROM ACTUATOR. FULL OPEN AND FULL CLOSE 24 VDC DRY CONTACTS FOR POSITION INDICATION.
A199345	MOV-240B	ISOLATION	BUTTERFLY	10"	50 – 125	FULL	CS	150#	YES	OPEN / CLOSE	120 / 1	VALVE: VANESSA SERIES 30,000 ROTARY PROCESS VALVE OR APPROVED EQUAL; ACTUATOR: BIFFI ICON 2000 ELECTRIC ACTUATOR OR APPROVED EQUAL, 120 VAC SINGLE PHASE CONTROL POWER TO MOTORIZED ACTUATOR, 24 VDC OPEN AND CLOSE CONTROL SIGNALS WITH 24 VDC SOURCED FROM ACTUATOR. FULL OPEN AND FULL CLOSE 24 VDC DRY CONTACTS FOR POSITION INDICATION.
A199173	MOV-022	BLEED	BALL	3/4"	–	FULL	CS	150#	YES	OPEN / CLOSE	120 / 1	VALVE: SHARPE SERIES 50 OR APPROVED EQUAL; ACTUATOR: KEYSTONE ELECTRIC ACTUATOR OR APPROVED EQUAL, 120 VAC SINGLE PHASE CONTROL POWER TO MOTORIZED ACTUATOR, 24 VDC OPEN AND CLOSE CONTROL SIGNALS WITH 24 VDC SOURCED FROM ACTUATOR. FULL OPEN AND FULL CLOSE 24 VDC DRY CONTACTS FOR POSITION INDICATION.
A199178	MOV-023	BLEED	BALL	3/4"	–	FULL	CS	150#	YES	OPEN / CLOSE	120 / 1	VALVE: SHARPE SERIES 50 OR APPROVED EQUAL; ACTUATOR: KEYSTONE ELECTRIC ACTUATOR OR APPROVED EQUAL, 120 VAC SINGLE PHASE CONTROL POWER TO MOTORIZED ACTUATOR, 24 VDC OPEN AND CLOSE CONTROL SIGNALS WITH 24 VDC SOURCED FROM ACTUATOR. FULL OPEN AND FULL CLOSE 24 VDC DRY CONTACTS FOR POSITION INDICATION.
A199281	FCV-205	CONTROL	BUTTERFLY	12"	50 – 225	FULL	CS	150#	YES	CONTROL	120 / 1	VALVE: VANESSA SERIES 30,000 ROTARY PROCESS VALVE OR APPROVED EQUAL; ACTUATOR: BIFFI ICON 2000 ELECTRIC ACTUATOR OR APPROVED EQUAL, 120 VAC SINGLE PHASE CONTROL POWER TO MOTORIZED ACTUATOR, 4–20 mA VALVE POSITION CONTROL AND 4–20 mA POSITION FEEDBACK FOR VALVE POSITION. VALVE SHALL BE FAIL IN PLACE POSITION.
A199304	FCV-215	CONTROL	BUTTERFLY	12"	50 – 200	FULL	CS	150#	YES	CONTROL	120 / 1	VALVE: VANESSA SERIES 30,000 ROTARY PROCESS VALVE OR APPROVED EQUAL; ACTUATOR: BIFFI ICON 2000 ELECTRIC ACTUATOR OR APPROVED EQUAL, 120 VAC SINGLE PHASE CONTROL POWER TO MOTORIZED ACTUATOR, 4–20 mA VALVE POSITION CONTROL AND 4–20 mA POSITION FEEDBACK FOR VALVE POSITION. VALVE SHALL BE FAIL IN PLACE POSITION.
A199327	FCV-225	CONTROL	BUTTERFLY	12"	50 – 200	FULL	CS	150#	YES	CONTROL	120 / 1	VALVE: VANESSA SERIES 30,000 ROTARY PROCESS VALVE OR APPROVED EQUAL; ACTUATOR: BIFFI ICON 2000 ELECTRIC ACTUATOR OR APPROVED EQUAL, 120 VAC SINGLE PHASE CONTROL POWER TO MOTORIZED ACTUATOR, 4–20 mA VALVE POSITION CONTROL AND 4–20 mA POSITION FEEDBACK FOR VALVE POSITION. VALVE SHALL BE FAIL IN PLACE POSITION.
A199371	FCV-235	CONTROL	BUTTERFLY	14"	50 – 300	FULL	CS	150#	YES	CONTROL	120 / 1	VALVE: VANESSA SERIES 30,000 ROTARY PROCESS VALVE OR APPROVED EQUAL; ACTUATOR: BIFFI ICON 2000 ELECTRIC ACTUATOR OR APPROVED EQUAL, 120 VAC SINGLE PHASE CONTROL POWER TO MOTORIZED ACTUATOR, 4–20 mA VALVE POSITION CONTROL AND 4–20 mA POSITION FEEDBACK FOR VALVE POSITION. VALVE SHALL BE FAIL IN PLACE POSITION.
A199348	FCV-245	CONTROL	BUTTERFLY	8"	50 – 125	FULL	CS	150#	YES	CONTROL	120 / 1	VALVE: VANESSA SERIES 30,000 ROTARY PROCESS VALVE OR APPROVED EQUAL; ACTUATOR: BIFFI ICON 2000 ELECTRIC ACTUATOR OR APPROVED EQUAL, 120 VAC SINGLE PHASE CONTROL POWER TO MOTORIZED ACTUATOR, 4–20 mA VALVE POSITION CONTROL AND 4–20 mA POSITION FEEDBACK FOR VALVE POSITION. VALVE SHALL BE FAIL IN PLACE POSITION.
A199390	FCV-255	CONTROL	BUTTERFLY	10"	50 – 150	FULL	CS	150#	YES	CONTROL	120 / 1	VALVE: VANESSA SERIES 30,000 ROTARY PROCESS VALVE OR APPROVED EQUAL; ACTUATOR: BIFFI ICON 2000 ELECTRIC ACTUATOR OR APPROVED EQUAL, 120 VAC SINGLE PHASE CONTROL POWER TO MOTORIZED ACTUATOR, 4–20 mA VALVE POSITION CONTROL AND 4–20 mA POSITION FEEDBACK FOR VALVE POSITION. VALVE SHALL BE FAIL IN PLACE POSITION.
A199409	FCV-265	CONTROL	BUTTERFLY	10"	50 – 150	FULL	CS	150#	YES	CONTROL	120 / 1	VALVE: VANESSA SERIES 30,000 ROTARY PROCESS VALVE OR APPROVED EQUAL; ACTUATOR: BIFFI ICON 2000 ELECTRIC ACTUATOR OR APPROVED EQUAL, 120 VAC SINGLE PHASE CONTROL POWER TO MOTORIZED ACTUATOR, 4–20 mA VALVE POSITION CONTROL AND 4–20 mA POSITION FEEDBACK FOR VALVE POSITION. VALVE SHALL BE FAIL IN PLACE POSITION.
A199432	FCV-275	CONTROL	BUTTERFLY	12"	50 – 250	FULL	CS	150#	YES	CONTROL	120 / 1	VALVE: VANESSA SERIES 30,000 ROTARY PROCESS VALVE OR APPROVED EQUAL; ACTUATOR: BIFFI ICON 2000 ELECTRIC ACTUATOR OR APPROVED EQUAL, 120 VAC SINGLE PHASE CONTROL POWER TO MOTORIZED ACTUATOR, 4–20 mA VALVE POSITION CONTROL AND 4–20 mA POSITION FEEDBACK FOR VALVE POSITION. VALVE SHALL BE FAIL IN PLACE POSITION.
A199451	FCV-285	CONTROL	BUTTERFLY	12"	50 – 250	FULL	CS	150#	YES	CONTROL	120 / 1	VALVE: VANESSA SERIES 30,000 ROTARY PROCESS VALVE OR APPROVED EQUAL; ACTUATOR: BIFFI ICON 2000 ELECTRIC ACTUATOR OR APPROVED EQUAL, 120 VAC SINGLE PHASE CONTROL POWER TO MOTORIZED ACTUATOR, 4–20 mA VALVE POSITION CONTROL AND 4–20 mA POSITION FEEDBACK FOR VALVE POSITION. VALVE SHALL BE FAIL IN PLACE POSITION.
A199470	FCV-295	CONTROL	BUTTERFLY	12"	50 – 250	FULL	CS	150#	YES	CONTROL	120 / 1	VALVE: VANESSA SERIES 30,000 ROTARY PROCESS VALVE OR APPROVED EQUAL; ACTUATOR: BIFFI ICON 2000 ELECTRIC ACTUATOR OR APPROVED EQUAL, 120 VAC SINGLE PHASE CONTROL POWER TO MOTORIZED ACTUATOR, 4–20 mA VALVE POSITION CONTROL AND 4–20 mA POSITION FEEDBACK FOR VALVE POSITION. VALVE SHALL BE FAIL IN PLACE POSITION.
A199241	FCV-305	CONTROL	BUTTERFLY	10"	50 – 175	FULL	CS	150#	YES	CONTROL	120 / 1	VALVE: VANESSA SERIES 30,000 ROTARY PROCESS VALVE OR APPROVED EQUAL; ACTUATOR: BIFFI ICON 2000 ELECTRIC ACTUATOR OR APPROVED EQUAL, 120 VAC SINGLE PHASE CONTROL POWER TO MOTORIZED ACTUATOR, 4–20 mA VALVE POSITION CONTROL AND 4–20 mA POSITION FEEDBACK FOR VALVE POSITION. VALVE SHALL BE FAIL IN PLACE POSITION.
A199262	FCV-315	CONTROL	BUTTERFLY	6"	50 – 75	FULL	CS	150#	YES	CONTROL	120 / 1	VALVE: VANESSA SERIES 30,000 ROTARY PROCESS VALVE OR APPROVED EQUAL; ACTUATOR: BIFFI ICON 2000 ELECTRIC ACTUATOR OR APPROVED EQUAL, 120 VAC SINGLE PHASE CONTROL POWER TO MOTORIZED ACTUATOR, 4–20 mA VALVE POSITION CONTROL AND 4–20 mA POSITION FEEDBACK FOR VALVE POSITION. VALVE SHALL BE FAIL IN PLACE POSITION.

PRESSURE BLOWER SCHEDULE

A NO.	DEVICE NO.	LOCATION	AREA SERVED	MAX. AIRFLOW RATE (LBS/HR)	DISCHARGE PRESSURE (PSIG)	FAN TYPE	MOTOR HP	MOTOR RPM	MOTOR V / PH	MOTOR ENC.	REMARKS
A199168	NB-001 (NORTH)	ECS ROOM	NORTH PURGE CIRCUITS	1,050	3.85	CENTRIFUGAL PRESSURE BLOWER	350	3570	480 / 3	TEFC	CONTINENTAL BLOWER, MODEL 600 WITH HYUNDAI HEVY INDUSTRIES MOTOR, MODEL #HSD350-36-L449TS OR APPROVED EQUAL.
A199169	RB-002 (STANDBY)	ECS ROOM	NORTH OR SOUTH PURGE CIRCUITS	1,050	3.85	CENTRIFUGAL PRESSURE BLOWER	350	3570	480 / 3	TEFC	CONTINENTAL BLOWER, MODEL 600 WITH HYUNDAI HEVY INDUSTRIES MOTOR, MODEL #HSD350-36-L449TS OR APPROVED EQUAL.
A199170	SB-003 (SOUTH)	ECS ROOM	SOUTH PURGE CIRCUITS	1,050	3.85	CENTRIFUGAL PRESSURE BLOWER	350	3570	480 / 3	TEFC	CONTINENTAL BLOWER, MODEL 600 WITH HYUNDAI HEVY INDUSTRIES MOTOR, MODEL #HSD350-36-L449TS OR APPROVED EQUAL.
A199214	LB-004 (ICPS)	ECS ROOM	ICPS CIRCUITS	250	4.8	CENTRIFUGAL PRESSURE BLOWER	125	3550	480 / 3	TEFC	CONTINENTAL BLOWER, MODEL 151 WITH HYUNDAI HEVY INDUSTRIES MOTOR, MODEL #HHI125-36-444TS OR APPROVED EQUAL.
A199215	LRB-005 (STANDBY)	ECS ROOM	ICPS CIRCUITS	250	4.8	CENTRIFUGAL PRESSURE BLOWER	125	3550	480 / 3	TEFC	CONTINENTAL BLOWER, MODEL 151 WITH HYUNDAI HEVY INDUSTRIES MOTOR, MODEL #HHI125-36-444TS OR APPROVED EQUAL.

ELECTRIC HEATER SCHEDULE

A NO.	DEVICE NO.	LOCATION	PURGE CIRCUIT	MAX. AIR FLOW (LBS/MIN)	MAX. AIR TEMP (°F)	HEAT (KW)	V / PH	AMPS	REMARKS
A199491 A199492	H-201A H-201B	ECS ROOM	6-N, CS/IT	225	155	126.4	460 / 3	151.9	WATLOW DUCT HEATERS, MODEL D200SX5-W-K OR APPROVED EQUAL.
A199493 A199494	H-211A H-211B	ECS ROOM	2-N, CS/FS	200	155	112.3	460 / 3	135.0	WATLOW DUCT HEATERS, MODEL D75SX5-W-K OR APPROVED EQUAL.
A199495 A199496	H-221A H-221B	ECS ROOM	1-N, SM	200	110	70.6	460 / 3	84.8	WATLOW DUCT HEATERS, MODEL D48SX5-W-K OR APPROVED EQUAL.
A199499 A199500	H-231A H-231B	ECS ROOM	7-N, CS/AFT	300	155	168.5	460 / 3	204.3	WATLOW DUCT HEATERS, MODEL D125SX5-W-K OR APPROVED EQUAL.
A199497 A199498	H-241A H-241B	ECS ROOM	5-N, SPARE	125	110	44.1	460 / 3	53.0	WATLOW DUCT HEATERS, MODEL D30SX5-W-K OR APPROVED EQUAL.
A199501 A199502	H-251A H-251B	ECS ROOM	12-S, LAS	150	110	52.9	460 / 3	63.6	WATLOW DUCT HEATERS, MODEL D36SX5-W-K OR APPROVED EQUAL.
A199503 A199504	H-261A H-261B	ECS ROOM	11-S, EC/CC	150	110	52.9	460 / 3	63.6	WATLOW DUCT HEATERS, MODEL D36SX5-W-K OR APPROVED EQUAL.
A199505 A199506	H-271A H-271B	ECS ROOM	8-S, CS/ENG	250	110	88.2	460 / 3	108.2	WATLOW DUCT HEATERS, MODEL D60SX5-W-K OR APPROVED EQUAL.
A199507 A199508	H-281A H-281B	ECS ROOM	9-S, SPARE	250	110	88.2	460 / 3	108.2	WATLOW DUCT HEATERS, MODEL D60SX5-W-K OR APPROVED EQUAL.
A199509 A199510	H-291A H-291B	ECS ROOM	10-S, SPARE	250	110	88.2	460 / 3	108.2	WATLOW DUCT HEATERS, MODEL D60SX5-W-K OR APPROVED EQUAL.
A199511 A199512	H-301A H-301B	ECS ROOM	3-L, ICPS	175	185	122.7	460 / 3	147.9	WATLOW DUCT HEATERS, MODEL D100SX5-W-K OR APPROVED EQUAL.
A199513 A199514	H-311A H-311B	ECS ROOM	4-L, SPARE	75	110	26.5	460 / 3	31.8	WATLOW DUCT HEATERS, MODEL D18SX5-W-K OR APPROVED EQUAL.

HUMIDIFIER SCHEDULE

A NO.	DEVICE NO.	LOCATION	SERVICE	PURGE CIRCUIT	STEAM (LBS/HR)	REMARKS
A201387	H-212	ECS ROOM	STEAM HUMIDIFICATION	2-N, CS/FS	28.3	DRISTEEM ULTRA-SORB, MODEL XV DISPERSION TUBES OR APPROVED EQUAL.
A201388	H-222	ECS ROOM	STEAM HUMIDIFICATION	1-N, SM	28.3	DRISTEEM ULTRA-SORB, MODEL XV DISPERSION TUBES OR APPROVED EQUAL.
A201389	H-232	ECS ROOM	STEAM HUMIDIFICATION	7-N, CS/AFT	42.5	DRISTEEM ULTRA-SORB, MODEL XV DISPERSION TUBES OR APPROVED EQUAL.
A201390	H-272	ECS ROOM	STEAM HUMIDIFICATION	8-S, CS/ENG	35.4	DRISTEEM ULTRA-SORB, MODEL XV DISPERSION TUBES OR APPROVED EQUAL.
A201391	H-302	ECS ROOM	STEAM HUMIDIFICATION	3-L, ICPS	24.8	DRISTEEM ULTRA-SORB, MODEL XV DISPERSION TUBES OR APPROVED EQUAL.

STEAM BOILER SCHEDULE

A NO.	DEVICE NO.	LOCATION	SERVICE	LBS/HR	TYPE	ELEMENTS QTY	ELEMENTS KW	V / PH	AMPS	REMARKS
A201382	NBO-601	ECS ROOM	STEAM	155	ELECTRIC	12	4	480 / 3	59	NORTH BOILER, CLEAVER BROOKS MODEL S/CR-120, RATED KW 48 (12 ELEMENTS, 4 KW EACH) AND ASME RATING 168 LBS ELECTRIC STEAM BOILER OR APPROVED EQUAL, 480V/3PH/60HZ, 59 AMPS; PROVIDED WITH 3 PRESSURE SWITCHES, RELIEF VALVE, SIGHT GLASS, AND FLOAT VALVE.
A201383	SBO-602	ECS ROOM	STEAM	155	ELECTRIC	12	4	480 / 3	59	SOUTH BOILER, CLEAVER BROOKS MODEL S/CR-120, RATED KW 48 (12 ELEMENTS, 4 KW EACH) AND ASME RATING 168 LBS ELECTRIC STEAM BOILER OR APPROVED EQUAL, 480V/3PH/60HZ, 59 AMPS; PROVIDED WITH 3 PRESSURE SWITCHES, RELIEF VALVE, SIGHT GLASS, AND FLOAT VALVE. (A STAND ALONE WATER CONDITIONER, A201392 SHALL BE PROVIDED TO CONDITION FEEDWATER FOR BOTH BOILERS. SEE DRAWING M-041 FOR DETAILS).

COOLING TOWER FAN SCHEDULE

A NO.	DEVICE NO.	AIRFLOW RATE (ACFM)	STATIC PRESSURE (IN H20)	DISCHARGE PRESSURE (IN H20)	FAN DIAMETER	FAN	NUMBER OF BLADES	FAN BHP	FAN RPM	GEAR DRIVE DETAILS	MOTOR HP	MOTOR RPM	MOTOR V / PH	MOTOR ENC.	REMARKS
A6651	CTF-401	79,676	0.7470	0.1243	9'-0"	HUDSON TUF-LITE II FAN, 3000H SERIES HUB OR APPROVED EQUAL.	6	17	350	AMARILLO RIGHT ANGLE MODEL 85, 5:1 REDUCTION RATIO, 25 AGMA MECHANICAL H.P. RATING, ONE REDUCTION OR APPROVED EQUAL.	20	1750	460 / 3	TEFC	RELIANCE ELECTRIC XE MOTOR, TYPE 256T OR APPROVED EQUAL.
A6652	CTF-402	79,676	0.7470	0.1243	9'-0"	HUDSON TUF-LITE II FAN, 3000H SERIES HUB OR APPROVED EQUAL.	6	17	350	AMARILLO RIGHT ANGLE MODEL 85, 5:1 REDUCTION RATIO, 25 AGMA MECHANICAL H.P. RATING, ONE REDUCTION OR APPROVED EQUAL.	20	1750	460 / 3	TEFC	RELIANCE ELECTRIC XE MOTOR, TYPE 256T OR APPROVED EQUAL.
A6653	CTF-403	79,676	0.7470	0.1243	9'-0"	HUDSON TUF-LITE II FAN, 3000H SERIES HUB OR APPROVED EQUAL.	6	17	350	AMARILLO RIGHT ANGLE MODEL 85, 5:1 REDUCTION RATIO, 25 AGMA MECHANICAL H.P. RATING, ONE REDUCTION OR APPROVED EQUAL.	20	1750	460 / 3	TEFC	RELIANCE ELECTRIC XE MOTOR, TYPE 256T OR APPROVED EQUAL.

COOLING COIL SCHEDULE

A NO.	COIL	LOCATION	SERVICE	Fluid Side GPM	Fluid Side INLET TEMP (°C)	Fluid Side OUTLET TEMP (°C)	Fluid Side MAX PRESS DROP (FT H20)	AIR SIDE (AMBIENT TEMP 96 DWB/85WDB) FLOW RATE (LB/MIN)	AIR SIDE INLET TEMP (°C)	AIR SIDE OUTLET TEMP (°C)	AIR SIDE MAX PRESS DROP (FT H20)	REMARKS
A6706	PRE-COOL	NORTH COOLING CHAMBER	CONDENSER WATER	194	95	105	13	194	151	100	13	EXISTING PRE-COIL SHALL BE REPLACED.
A6708	PRE-COOL	SOUTH COOLING CHAMBER	CONDENSER WATER	194	95	105	13	194	151	100	13	EXISTING PRE-COIL SHALL BE REPLACED.
A6862	POST-COOL	NORTH COOLING CHAMBER	CHILLED GLYCOL WATER	600	31	41	20	600	100	34	20	IF FIXED PRICE OPTION FPO-2 IS NOT EXCERSISED, EXISTING POST-COOL COIL SHALL REMAIN IN PLACE.
A6863	POST-COOL	SOUTH COOLING CHAMBER	CHILLED GLYCOL WATER	600	31	41	20	600	100	34	20	IF FIXED PRICE OPTION FPO-2 IS NOT EXCERSISED, EXISTING POST-COOL COIL SHALL REMAIN IN PLACE.
A501799	PRE-COOL	ICPS COOLING CHAMBER	CONDENSER WATER	55	95	105	10	55	166	100	10	EXISTING PRE-COIL SHALL BE REPLACED.
A501800	POST-COOL	ICPS COOLING CHAMBER	CHILLED GLYCOL WATER	150	31	41	15	150	100	34	15	IF FIXED PRICE OPTION FPO-2 IS NOT EXCERSISED, EXISTING POST-COOL COIL SHALL REMAIN IN PLACE.

NOTES:

1. ALL ITEMS NOTED WITH NASA PART NUMBERS (DIFFERENTIAL PRESSURE TRANSMITTERS) WILL BE GOVERNMENT FURNISHED EQUIPMENT – PROVIDED BY OTHER, INSTALLED BY CONTRACTOR.

SYM	ZONE	DESCRIPTION	DATE	APPROVED
		REVISIONS		

JACOBS
Jacobs Technology Inc.

SIGNATURES		DATE
DRAWN	MIKE VANHOOSE	3/07/14
CHECKED	BRIAN GODFREY	3/07/14
SUBMITTED	RAVI MUTHIAH	3/07/14
ST OF LICENSURE: FL LICENSE NO: 68076		
APPROVED	GLEN WARD	3/07/14
	DREW GILLESPIE	3/07/14

NATIONAL AERONAUTICS AND SPACE ADMINISTRATION
JOHN F. KENNEDY SPACE CENTER, NASA
KENNEDY SPACE CENTER, FLORIDA

KSC LAUNCH PAD 39-B
ENVIRONMENTAL CONTROL SYSTEM (ECS) REFURBISHMENT
MECHANICAL INSTALLATION
EQUIPMENT SCHEDULES

M-045

FILE NO.	SIZE	DWG.NO.	REV
	F	79K39602	
PCN. NO. 98898		SHEET 48 OF 187	

P:\39452\DRAWINGS\PROC\M-045.DWG 19-DEC-2013 23:35 RICHARCW

INSTRUMENTATION SCHEDULE – AIR/GN2

A NO.	DEVICE NO.	DESCRIPTION	SERVICE	REMARKS
A199196 A199197	MT-104A MT-104B	MOISTURE TRANSMITTER	AIR	MOISTURE TRANSMITTER, VAISALA 360 8A12BCK2B4BL5A3H, 28VDC POWERED 1-4-20mA %RH FEEDBACK, GOVERNMENT FURNISHED EQUIPMENT AND INSTALLED BY CONTRACTOR
A199210 A199211	MT-114A MT-114B	MOISTURE TRANSMITTER	AIR	MOISTURE TRANSMITTER, VAISALA 360 8A12BCK2B4BL5A3H, 28VDC POWERED 1-4-20mA %RH FEEDBACK, GOVERNMENT FURNISHED EQUIPMENT AND INSTALLED BY CONTRACTOR
A199232 A199233	MT-124A MT-124B	MOISTURE TRANSMITTER	AIR	MOISTURE TRANSMITTER, VAISALA 360 8A12BCK2B4BL5A3H, 28VDC POWERED 1-4-20mA %RH FEEDBACK, GOVERNMENT FURNISHED EQUIPMENT AND INSTALLED BY CONTRACTOR
A199283 A199284	MT/TT-206A MT/TT-206B	MOISTURE & TEMPERATURE TRANSMITTER	AIR	MOISTURE AND TEMPERATURE TRANSMITTER, VAISALA 360 8A12BCK2B4BL5A3H, 28VDC POWERED 1-4-20mA %RH FEEDBACK AND 1-4-20mA TEMPERATURE FEEDBACK, GOVERNMENT FURNISHED EQUIPMENT AND INSTALLED BY CONTRACTOR
A199306 A199307	MT/TT-216A MT/TT-216B	MOISTURE & TEMPERATURE TRANSMITTER	AIR	MOISTURE AND TEMPERATURE TRANSMITTER, VAISALA 360 8A12BCK2B4BL5A3H, 28VDC POWERED 1-4-20mA %RH FEEDBACK AND 1-4-20mA TEMPERATURE FEEDBACK, GOVERNMENT FURNISHED EQUIPMENT AND INSTALLED BY CONTRACTOR
A199329 A199330	MT/TT-226A MT/TT-226B	MOISTURE & TEMPERATURE TRANSMITTER	AIR	MOISTURE AND TEMPERATURE TRANSMITTER, VAISALA 360 8A12BCK2B4BL5A3H, 28VDC POWERED 1-4-20mA %RH FEEDBACK AND 1-4-20mA TEMPERATURE FEEDBACK, GOVERNMENT FURNISHED EQUIPMENT AND INSTALLED BY CONTRACTOR
A199373 A199374	MT/TT-236A MT/TT-236B	MOISTURE & TEMPERATURE TRANSMITTER	AIR	MOISTURE AND TEMPERATURE TRANSMITTER, VAISALA 360 8A12BCK2B4BL5A3H, 28VDC POWERED 1-4-20mA %RH FEEDBACK AND 1-4-20mA TEMPERATURE FEEDBACK, GOVERNMENT FURNISHED EQUIPMENT AND INSTALLED BY CONTRACTOR
A199350 A199351	MT/TT-246A MT/TT-246B	MOISTURE & TEMPERATURE TRANSMITTER	AIR	MOISTURE AND TEMPERATURE TRANSMITTER, VAISALA 360 8A12BCK2B4BL5A3H, 28VDC POWERED 1-4-20mA %RH FEEDBACK AND 1-4-20mA TEMPERATURE FEEDBACK, GOVERNMENT FURNISHED EQUIPMENT AND INSTALLED BY CONTRACTOR
A199392 A199393	MT/TT-256A MT/TT-256B	MOISTURE & TEMPERATURE TRANSMITTER	AIR	MOISTURE AND TEMPERATURE TRANSMITTER, VAISALA 360 8A12BCK2B4BL5A3H, 28VDC POWERED 1-4-20mA %RH FEEDBACK AND 1-4-20mA TEMPERATURE FEEDBACK, GOVERNMENT FURNISHED EQUIPMENT AND INSTALLED BY CONTRACTOR
A199411 A199412	MT/TT-266A MT/TT-266B	MOISTURE & TEMPERATURE TRANSMITTER	AIR	MOISTURE AND TEMPERATURE TRANSMITTER, VAISALA 360 8A12BCK2B4BL5A3H, 28VDC POWERED 1-4-20mA %RH FEEDBACK AND 1-4-20mA TEMPERATURE FEEDBACK, GOVERNMENT FURNISHED EQUIPMENT AND INSTALLED BY CONTRACTOR
A199434 A199435	MT/TT-276A MT/TT-276B	MOISTURE & TEMPERATURE TRANSMITTER	AIR	MOISTURE AND TEMPERATURE TRANSMITTER, VAISALA 360 8A12BCK2B4BL5A3H, 28VDC POWERED 1-4-20mA %RH FEEDBACK AND 1-4-20mA TEMPERATURE FEEDBACK, GOVERNMENT FURNISHED EQUIPMENT AND INSTALLED BY CONTRACTOR
A199453 A199454	MT/TT-286A MT/TT-286B	MOISTURE & TEMPERATURE TRANSMITTER	AIR	MOISTURE AND TEMPERATURE TRANSMITTER, VAISALA 360 8A12BCK2B4BL5A3H, 28VDC POWERED 1-4-20mA %RH FEEDBACK AND 1-4-20mA TEMPERATURE FEEDBACK, GOVERNMENT FURNISHED EQUIPMENT AND INSTALLED BY CONTRACTOR
A199472 A199473	MT/TT-296A MT/TT-296B	MOISTURE & TEMPERATURE TRANSMITTER	AIR	MOISTURE AND TEMPERATURE TRANSMITTER, VAISALA 360 8A12BCK2B4BL5A3H, 28VDC POWERED 1-4-20mA %RH FEEDBACK AND 1-4-20mA TEMPERATURE FEEDBACK, GOVERNMENT FURNISHED EQUIPMENT AND INSTALLED BY CONTRACTOR
A199243 A199244	MT/TT-306A MT/TT-306B	MOISTURE & TEMPERATURE TRANSMITTER	AIR	MOISTURE AND TEMPERATURE TRANSMITTER, VAISALA 360 8A12BCK2B4BL5A3H, 28VDC POWERED 1-4-20mA %RH FEEDBACK AND 1-4-20mA TEMPERATURE FEEDBACK, GOVERNMENT FURNISHED EQUIPMENT AND INSTALLED BY CONTRACTOR
A199264 A199265	MT/TT-316A MT/TT-316B	MOISTURE & TEMPERATURE TRANSMITTER	AIR	MOISTURE AND TEMPERATURE TRANSMITTER, VAISALA 360 8A12BCK2B4BL5A3H, 28VDC POWERED 1-4-20mA %RH FEEDBACK AND 1-4-20mA TEMPERATURE FEEDBACK, GOVERNMENT FURNISHED EQUIPMENT AND INSTALLED BY CONTRACTOR
A199279 A199280	OTS-201A OTS-201B	OVER TEMP. SWITCH	AIR	PROVIDED WITH ELECTRIC HEATER.
A199298 A199299	OTS-211A OTS-211B	OVER TEMP. SWITCH	AIR	PROVIDED WITH ELECTRIC HEATER.
A199321 A199322	OTS-221A OTS-221B	OVER TEMP. SWITCH	AIR	PROVIDED WITH ELECTRIC HEATER.
A199365 A199366	OTS-231A OTS-231B	OVER TEMP. SWITCH	AIR	PROVIDED WITH ELECTRIC HEATER.
A199346 A199347	OTS-241A OTS-241B	OVER TEMP. SWITCH	AIR	PROVIDED WITH ELECTRIC HEATER.
A199388 A199389	OTS-251A OTS-251B	OVER TEMP. SWITCH	AIR	PROVIDED WITH ELECTRIC HEATER.
A199407 A199408	OTS-261A OTS-261B	OVER TEMP. SWITCH	AIR	PROVIDED WITH ELECTRIC HEATER.
A199426 A199427	OTS-271A OTS-271B	OVER TEMP. SWITCH	AIR	PROVIDED WITH ELECTRIC HEATER.
A199449 A199450	OTS-281A OTS-281B	OVER TEMP. SWITCH	AIR	PROVIDED WITH ELECTRIC HEATER.
A199468 A199469	OTS-291A OTS-291B	OVER TEMP. SWITCH	AIR	PROVIDED WITH ELECTRIC HEATER.
A199235 A199236	OTS-301A OTS-301B	OVER TEMP. SWITCH	AIR	PROVIDED WITH ELECTRIC HEATER.
A199260 A199261	OTS-311A OTS-311B	OVER TEMP. SWITCH	AIR	PROVIDED WITH ELECTRIC HEATER.
A199184 A199185	PT-101A PT-101B	PRESSURE TRANSDUCER	AIR	TABER PRESSURE TRANSDUCER, MODEL 2911, NASA PART NUMBER 79K38668-A-C-06, MADE BY TELEDYNE TABER, 455 BRYANT STREET NORTH, TONAWANDA, NY, 14120. GOVERNMENT FURNISHED EQUIPMENT AND INSTALLED BY CONTRACTOR
A199198 A199199	PT-111A PT-111B	PRESSURE TRANSDUCER	AIR	TABER PRESSURE TRANSDUCER, MODEL 2911, NASA PART NUMBER 79K38668-A-C-06, MADE BY TELEDYNE TABER, 455 BRYANT STREET NORTH, TONAWANDA, NY, 14120. GOVERNMENT FURNISHED EQUIPMENT AND INSTALLED BY CONTRACTOR
A199220 A199221	PT-121A PT-121B	PRESSURE TRANSDUCER	AIR	TABER PRESSURE TRANSDUCER, MODEL 2911, NASA PART NUMBER 79K38668-A-C-06, MADE BY TELEDYNE TABER, 455 BRYANT STREET NORTH, TONAWANDA, NY, 14120. GOVERNMENT FURNISHED EQUIPMENT AND INSTALLED BY CONTRACTOR
A199291 A199292	PT-208A PT-208B	PRESSURE TRANSDUCER	AIR	TABER PRESSURE TRANSDUCER, MODEL 2911, NASA PART NUMBER 79K38668-A-C-06, MADE BY TELEDYNE TABER, 455 BRYANT STREET NORTH, TONAWANDA, NY, 14120. GOVERNMENT FURNISHED EQUIPMENT AND INSTALLED BY CONTRACTOR
A199314 A199315	PT-218A PT-218B	PRESSURE TRANSDUCER	AIR	TABER PRESSURE TRANSDUCER, MODEL 2911, NASA PART NUMBER 79K38668-A-C-06, MADE BY TELEDYNE TABER, 455 BRYANT STREET NORTH, TONAWANDA, NY, 14120. GOVERNMENT FURNISHED EQUIPMENT AND INSTALLED BY CONTRACTOR
A199337 A199338	PT-228A PT-228B	PRESSURE TRANSDUCER	AIR	TABER PRESSURE TRANSDUCER, MODEL 2911, NASA PART NUMBER 79K38668-A-C-06, MADE BY TELEDYNE TABER, 455 BRYANT STREET NORTH, TONAWANDA, NY, 14120. GOVERNMENT FURNISHED EQUIPMENT AND INSTALLED BY CONTRACTOR
A199381 A199382	PT-238A PT-238B	PRESSURE TRANSDUCER	AIR	TABER PRESSURE TRANSDUCER, MODEL 2911, NASA PART NUMBER 79K38668-A-C-06, MADE BY TELEDYNE TABER, 455 BRYANT STREET NORTH, TONAWANDA, NY, 14120. GOVERNMENT FURNISHED EQUIPMENT AND INSTALLED BY CONTRACTOR
A199358 A199359	PT-248A PT-248B	PRESSURE TRANSDUCER	AIR	TABER PRESSURE TRANSDUCER, MODEL 2911, NASA PART NUMBER 79K38668-A-C-06, MADE BY TELEDYNE TABER, 455 BRYANT STREET NORTH, TONAWANDA, NY, 14120. GOVERNMENT FURNISHED EQUIPMENT AND INSTALLED BY CONTRACTOR
A199400 A199401	PT-258A PT-258B	PRESSURE TRANSDUCER	AIR	TABER PRESSURE TRANSDUCER, MODEL 2911, NASA PART NUMBER 79K38668-A-C-06, MADE BY TELEDYNE TABER, 455 BRYANT STREET NORTH, TONAWANDA, NY, 14120. GOVERNMENT FURNISHED EQUIPMENT AND INSTALLED BY CONTRACTOR
A199419 A199420	PT-268A PT-268B	PRESSURE TRANSDUCER	AIR	TABER PRESSURE TRANSDUCER, MODEL 2911, NASA PART NUMBER 79K38668-A-C-06, MADE BY TELEDYNE TABER, 455 BRYANT STREET NORTH, TONAWANDA, NY, 14120. GOVERNMENT FURNISHED EQUIPMENT AND INSTALLED BY CONTRACTOR
A199442 A199443	PT-278A PT-278B	PRESSURE TRANSDUCER	AIR	TABER PRESSURE TRANSDUCER, MODEL 2911, NASA PART NUMBER 79K38668-A-C-06, MADE BY TELEDYNE TABER, 455 BRYANT STREET NORTH, TONAWANDA, NY, 14120. GOVERNMENT FURNISHED EQUIPMENT AND INSTALLED BY CONTRACTOR
A199461 A199462	PT-288A PT-288B	PRESSURE TRANSDUCER	AIR	TABER PRESSURE TRANSDUCER, MODEL 2911, NASA PART NUMBER 79K38668-A-C-06, MADE BY TELEDYNE TABER, 455 BRYANT STREET NORTH, TONAWANDA, NY, 14120. GOVERNMENT FURNISHED EQUIPMENT AND INSTALLED BY CONTRACTOR
A199480 A199481	PT-298A PT-298B	PRESSURE TRANSDUCER	AIR	TABER PRESSURE TRANSDUCER, MODEL 2911, NASA PART NUMBER 79K38668-A-C-06, MADE BY TELEDYNE TABER, 455 BRYANT STREET NORTH, TONAWANDA, NY, 14120. GOVERNMENT FURNISHED EQUIPMENT AND INSTALLED BY CONTRACTOR
A199251 A199252	PT-308A PT-308B	PRESSURE TRANSDUCER	AIR	TABER PRESSURE TRANSDUCER, MODEL 2911, NASA PART NUMBER 79K38668-A-C-06, MADE BY TELEDYNE TABER, 455 BRYANT STREET NORTH, TONAWANDA, NY, 14120. GOVERNMENT FURNISHED EQUIPMENT AND INSTALLED BY CONTRACTOR
A199272 A199273	PT-318A PT-318B	PRESSURE TRANSDUCER	AIR	TABER PRESSURE TRANSDUCER, MODEL 2911, NASA PART NUMBER 79K38668-A-C-06, MADE BY TELEDYNE TABER, 455 BRYANT STREET NORTH, TONAWANDA, NY, 14120. GOVERNMENT FURNISHED EQUIPMENT AND INSTALLED BY CONTRACTOR
A199188 A199289	TE-102A TE-102B	TEMPERATURE ELEMENT	AIR	NASA PART NUMBER 79K03040B120S, MADE BY SCIENTIFIC INSTRUMENTS, INC., 4400 W. TIFFANY DRIVE, WEST PALM BEACH, FL, 33407. THERMOWELL SHALL BE PROVIDED. GOVERNMENT FURNISHED EQUIPMENT AND INSTALLED BY CONTRACTOR
A199191 A199192	TE-103A TE-103B	TEMPERATURE ELEMENT	AIR	NASA PART NUMBER 79K03040B120S, MADE BY SCIENTIFIC INSTRUMENTS, INC., 4400 W. TIFFANY DRIVE, WEST PALM BEACH, FL, 33407. THERMOWELL SHALL BE PROVIDED. GOVERNMENT FURNISHED EQUIPMENT AND INSTALLED BY CONTRACTOR
A199202 A199203	TE-112A TE-112B	TEMPERATURE ELEMENT	AIR	NASA PART NUMBER 79K03040B120S, MADE BY SCIENTIFIC INSTRUMENTS, INC., 4400 W. TIFFANY DRIVE, WEST PALM BEACH, FL, 33407. THERMOWELL SHALL BE PROVIDED. GOVERNMENT FURNISHED EQUIPMENT AND INSTALLED BY CONTRACTOR
A199205 A199206	TE-113A TE-113B	TEMPERATURE ELEMENT	AIR	NASA PART NUMBER 79K03040B120S, MADE BY SCIENTIFIC INSTRUMENTS, INC., 4400 W. TIFFANY DRIVE, WEST PALM BEACH, FL, 33407. THERMOWELL SHALL BE PROVIDED. GOVERNMENT FURNISHED EQUIPMENT AND INSTALLED BY CONTRACTOR
A199224 A199225	TE-122A TE-122B	TEMPERATURE ELEMENT	AIR	NASA PART NUMBER 79K03040B120S, MADE BY SCIENTIFIC INSTRUMENTS, INC., 4400 W. TIFFANY DRIVE, WEST PALM BEACH, FL, 33407. THERMOWELL SHALL BE PROVIDED. GOVERNMENT FURNISHED EQUIPMENT AND INSTALLED BY CONTRACTOR
A199227 A199228	TE-123A TE-123B	TEMPERATURE ELEMENT	AIR	NASA PART NUMBER 79K03040B120S, MADE BY SCIENTIFIC INSTRUMENTS, INC., 4400 W. TIFFANY DRIVE, WEST PALM BEACH, FL, 33407. THERMOWELL SHALL BE PROVIDED. GOVERNMENT FURNISHED EQUIPMENT AND INSTALLED BY CONTRACTOR

CHILLER SCHEDULE

A NO.	DEVICE NO.	LOCATION	UNIT NOMINAL TONNAGE	REFRIGERANT		COOLING EFFICIENCY				NO. COMPRESSORS	EVAPORATOR					CONDENSER					MOTORS (EACH)				SOUND PRESSURE (dBA)	REMARKS
				TYPE	CHARGE (LB.)	FULL LOAD (kW/TON)	FULL LOAD EER	IPLV (kW/TON)	IPLV EER		NOM. FLOW RATE (GPM)	EWT (DEG F)	LWT (DEG F)	MAX. PD (FT. H2O)	NO. PASSES	NOM. FLOW RATE (GPM)	EWT (DEG F)	LWT (DEG F)	MAX. PD (FT. H2O)	NO. PASSES	POWER (kW)	V / PH	CURRENT (AMPS) MCA	CURRENT (AMPS) MOP		
A201166	CH-501	ECS ROOM	275	R-134A	1113	0.899	13.36	0.899	20.9	2	721,6	41	31	9.7	2	835	95.0	105.0	7.4	2	247.1	480 / 3	400	600	85	DUNHAM BUSH WATER COOLED PACKAGE CHILLER, MODEL WCFX46TAR8DRM5R OR APPROVED EQUAL. CHILLER SHALL BE PROVIDED WITH METERING CONTROL VALVE A201214 AS SPECIFIED ON DRAWING M-033.
A201167	CH-502	ECS ROOM	275	R-134A	1113	0.899	13.36	0.899	20.9	2	721,6	41	31	9.7	2	835	95.0	105.0	7.4	2	247.1	480 / 3	400	600	85	DUNHAM BUSH WATER COOLED PACKAGE CHILLER, MODEL WCFX46TAR8DRM5R OR APPROVED EQUAL. CHILLER SHALL BE PROVIDED WITH METERING CONTROL VALVE A201215 AS SPECIFIED ON DRAWING M-033.
A201168	CH-503	ECS ROOM	275	R-134A	1113	0.899	13.36	0.899	20.9	2	721,6	41	31	9.7	2	835	95.0	105.0	7.4	2	247.1	480 / 3	400	600	85	DUNHAM BUSH WATER COOLED PACKAGE CHILLER, MODEL WCFX46TAR8DRM5R OR APPROVED EQUAL. CHILLER SHALL BE PROVIDED WITH METERING CONTROL VALVE A201216 AS SPECIFIED ON DRAWING M-033.

VALVE SCHEDULE – WATER GLYCOL, CONDENSER WATER, STEAM, & CONDENSATE

A NO.	DEVICE NO.	LOCATION	VALVE TYPE	VALVE SIZE	SERVICE	GPM	LBS/HR	Cv	PORT	BODY	FLANGE	LIMIT SWITCH	ACTUATOR TYPE	ACTUATOR V / PH @ 60 Hz	REMARKS
A201163	TCV-517	NORTH COOLING CHAMBER	3-WAY	4"	WATER GLYCOL	590	–	430	90 deg	SS	150#	NO	MODULATING	120 / 1	VALVE: SHARPE 7766MT4D9 SS BODY, 316 SS BALL/STEM, TFM SEATS, TFE SEALS, CS 150# RF FLANGE; ACTUATOR: KEYSTONE E051A4W5P10 EPI2 ELECTRIC ACTUATOR, NEMA 4, 4-20 mA CONTROL SIGNAL AND POSITION TRANSMITTER OR APPROVED EQUAL.
A201164	TCV-518	SOUTH COOLING CHAMBER	3-WAY	4"	WATER GLYCOL	590	–	430	90 deg	SS	150#	NO	MODULATING	120 / 1	VALVE: SHARPE 7766MT4D9 SS BODY, 316 SS BALL/STEM, TFM SEATS, TFE SEALS, CS 150# RF FLANGE; ACTUATOR: KEYSTONE E051A4W5P10 EPI2 ELECTRIC ACTUATOR, NEMA 4, 4-20 mA CONTROL SIGNAL AND POSITION TRANSMITTER OR APPROVED EQUAL.
A201165	TCV-519	ICPS COOLING CHAMBER	3-WAY	2.5"	WATER GLYCOL	150	–	160	90 deg	SS	150#	NO	MODULATING	120 / 1	VALVE: SHARPE 7766MT4D9 SS BODY, 316 SS BALL/STEM, TFM SEATS, TFE SEALS, CS 150# RF FLANGE; ACTUATOR: KEYSTONE E051A4W5P10 EPI2 ELECTRIC ACTUATOR, NEMA 4, 4-20 mA CONTROL SIGNAL AND POSITION TRANSMITTER OR APPROVED EQUAL.
A201357 A201358	FCV-213A FCV-213B	CIRCUIT 2-N (CS/IU)	BALL	3/4"	STEAM	–	25.7	19	0.69 IN	CS	150#	NO	MODULATING	120 / 1	VALVE: METSO 3/4" 7150-11-2236TTT CS BODY, 316 SS BALL/STEM, PTFE SEATS, PTFE SEALS; ACTUATOR: VW150CIS2ZN-115AC ELECTRIC ACTUATOR, NEMA 4, 4-20 mA CONTROL SIGNAL AND POSITION TRANSMITTER WITH MANUAL OVERRIDE OR APPROVED EQUAL.
A201361 A201362	FCV-223A FCV-223B	CIRCUIT 1-N (SM/SA)	BALL	3/4"	STEAM	–	25.7	19	0.69 IN	CS	150#	NO	MODULATING	120 / 1	VALVE: METSO 3/4" 7150-11-2236TTT CS BODY, 316 SS BALL/STEM, PTFE SEATS, PTFE SEALS; ACTUATOR: VW150CIS2ZN-115AC ELECTRIC ACTUATOR, NEMA 4, 4-20 mA CONTROL SIGNAL AND POSITION TRANSMITTER WITH MANUAL OVERRIDE OR APPROVED EQUAL.
A201365 A201366	FCV-233A FCV-233B	CIRCUIT 7-N (CS/AFT)	BALL	3/4"	STEAM	–	38.5	19	0.69 IN	CS	150#	NO	MODULATING	120 / 1	VALVE: METSO 3/4" 7150-11-2236TTT CS BODY, 316 SS BALL/STEM, PTFE SEATS, PTFE SEALS; ACTUATOR: VW150CIS2ZN-115AC ELECTRIC ACTUATOR, NEMA 4, 4-20 mA CONTROL SIGNAL AND POSITION TRANSMITTER WITH MANUAL OVERRIDE OR APPROVED EQUAL.
A201373 A201374	FCV-273A FCV-273B	CIRCUIT 8-S (CS/ENG)	BALL	3/4"	STEAM	–	32.1	19	0.69 IN	CS	150#	NO	MODULATING	120 / 1	VALVE: METSO 3/4" 7150-11-2236TTT CS BODY, 316 SS BALL/STEM, PTFE SEATS, PTFE SEALS; ACTUATOR: VW150CIS2ZN-115AC ELECTRIC ACTUATOR, NEMA 4, 4-20 mA CONTROL SIGNAL AND POSITION TRANSMITTER WITH MANUAL OVERRIDE OR APPROVED EQUAL.
A201377 A201378	FCV-303A FCV-303B	CIRCUIT 3-L (ICPS)	BALL	3/4"	STEAM	–	22.5	19	0.69 IN	CS	150#	NO	MODULATING	120 / 1	VALVE: METSO 3/4" 7150-11-2236TTT CS BODY, 316 SS BALL/STEM, PTFE SEATS, PTFE SEALS; ACTUATOR: VW150CIS2ZN-115AC ELECTRIC ACTUATOR, NEMA 4, 4-20 mA CONTROL SIGNAL AND POSITION TRANSMITTER WITH MANUAL OVERRIDE OR APPROVED EQUAL.
A201351 A201352	SOV-603A SOV-603B	NORTH BOILER	SOLENOID	3/4"	STEAM/COND	–	–	8.8	FULL	BRASS	NPT	NO	SOLENOID	24VDC	BRASS BODY, SS INTERNALS, PTFE SEALS AND DISCS, COPPER COIL, 24VDC, NORMALLY CLOSED. ASCO 8220G408 OR APPROVED EQUAL.
A201353 A201354	SOV-604A SOV-604B	NORTH BOILER	SOLENOID	3/4"	STEAM/COND	–	–	8.8	FULL	BRASS	NPT	NO	SOLENOID	24VDC	BRASS BODY, SS INTERNALS, PTFE SEALS AND DISCS, COPPER COIL, 24VDC, NORMALLY CLOSED. ASCO 8220G408 OR APPROVED EQUAL.
A201367 A201368	SOV-605A SOV-605B	SOUTH BOILER	SOLENOID	3/4"	STEAM/COND	–	–	8.8	FULL	BRASS	NPT	NO	SOLENOID	24VDC	BRASS BODY, SS INTERNALS, PTFE SEALS AND DISCS, COPPER COIL, 24VDC, NORMALLY CLOSED. ASCO 8220G408 OR APPROVED EQUAL.
A201369 A201370	SOV-606A SOV-606B	SOUTH BOILER	SOLENOID	3/4"	STEAM/COND	–	–	8.8	FULL	BRASS	NPT	NO	SOLENOID	24VDC	BRASS BODY, SS INTERNALS, PTFE SEALS AND DISCS, COPPER COIL, 24VDC, NORMALLY CLOSED. ASCO 8220G408 OR APPROVED EQUAL.
A201355 A201356	SOV-214A SOV-214B	CIRCUIT 2-N (CS/IU)	SOLENOID	3/4"	STEAM/COND	–	25.7	8.8	FULL	BRASS	NPT	NO	SOLENOID	24VDC	BRASS BODY, SS INTERNALS, PTFE SEALS AND DISCS, COPPER COIL, 24VDC, NORMALLY CLOSED. ASCO 8220G408 OR APPROVED EQUAL.
A201359 A201360	SOV-224A SOV-224B	CIRCUIT 1-N (SM/SA)	SOLENOID	3/4"	STEAM/COND	–	25.7	8.8	FULL	BRASS	NPT	NO	SOLENOID	24VDC	BRASS BODY, SS INTERNALS, PTFE SEALS AND DISCS, COPPER COIL, 24VDC, NORMALLY CLOSED. ASCO 8220G408 OR APPROVED EQUAL.
A201363 A201364	SOV-234A SOV-234B	CIRCUIT 7-N (CS/AFT)	SOLENOID	3/4"	STEAM/COND	–	38.5	8.8	FULL	BRASS	NPT	NO	SOLENOID	24VDC	BRASS BODY, SS INTERNALS, PTFE SEALS AND DISCS, COPPER COIL, 24VDC, NORMALLY CLOSED. ASCO 8220G408 OR APPROVED EQUAL.
A201371 A201372	SOV-274A SOV-274B	CIRCUIT 8-S (CS/ENG)	SOLENOID	3/4"	STEAM/COND	–	32.1	8.8	FULL	BRASS	NPT	NO	SOLENOID	24VDC	BRASS BODY, SS INTERNALS, PTFE SEALS AND DISCS, COPPER COIL, 24VDC, NORMALLY CLOSED. ASCO 8220G408 OR APPROVED EQUAL.
A201375 A201376	SOV-304A SOV-304B	CIRCUIT 3-L (ICPS)	SOLENOID	3/4"	STEAM/COND	–	22.5	8.8	FULL	BRASS	NPT	NO	SOLENOID	24VDC	BRASS BODY, SS INTERNALS, PTFE SEALS AND DISCS, COPPER COIL, 24VDC, NORMALLY CLOSED. ASCO 8220G408 OR APPROVED EQUAL.
A536700 A536702	FCV-415	COOLING TOWER BY-PASS	3-WAY	10"	CONDENSER WATER	2095	–	–	FULL	CS	150#	NO	MODULATING	–	KEYSTONE SERIES GRL-D32E-A1-K BUTTERFLY VALVES, DUCTILE IRON, LUGGED STYLE, ALUMINUM-BRONZE DISC, 431 SS STEM, EPDM SEAT (2). MORIN B135-U-S080 PNEUMATIC ACTUATOR, SPRING RETURN (80 PSI), MECHANICAL LINKAGE/MOUNTING KIT CONNECTING TWO VALVES, WESTLOCK K10-N-N-H-OEF ELECTRO PNEUMATIC ANALOG VALVE POSITIONER, 4-20 mA SIGNAL OUTPUT AND 4-20 mA FEEDBACK, 10"X10"X10" 125# CAST IRON TEE OR APPROVED EQUAL.

PUMP SCHEDULE

A NO.	DEVICE NO.	LOCATION	SERVICE	GPM	HEAD (FT)	TYPE	MIN. EFF. (%)	SUCTION SIZE (IN)	DISCHARGE SIZE (IN)	MOTOR HP	MOTOR RPM	MOTOR V / PH	MOTOR ENC.	REMARKS
A6655	P-411	OUTDOOR	CONDENSER WATER	2,095	80	ANSI CENTRIFUGAL	85.0	12	10	60	1800	460 / 3	TEFC	GOULDS MODEL 3410-L OR APPROVED EQUAL. (PHYSICAL LAYOUT OF NEW PUMP AND MOTOR SHALL MATCH EXISTING CONFIGURATION).
A6656	P-412	OUTDOOR	CONDENSER WATER	2,095	80	ANSI CENTRIFUGAL	85.0	12	10	60	1800	460 / 3	TEFC	GOULDS MODEL 3410-L OR APPROVED EQUAL. (PHYSICAL LAYOUT OF NEW PUMP AND MOTOR SHALL MATCH EXISTING CONFIGURATION).
A6872	P-511	ECS ROOM	CHILLED GLYCOL WATER	1,330	100	ANSI CENTRIFUGAL	76.0	8	6	50	1800	460 / 3	TEFC	GOULDS MODEL 3410-M OR APPROVED EQUAL. (PHYSICAL LAYOUT OF NEW PUMP AND MOTOR SHALL MATCH EXISTING CONFIGURATION).
A6878	P-512	ECS ROOM	CHILLED GLYCOL WATER	1,330	100	ANSI CENTRIFUGAL	76.0	8	6	50	1800	460 / 3	TEFC	GOULDS MODEL 3410-M OR APPROVED EQUAL. (PHYSICAL LAYOUT OF NEW PUMP AND MOTOR SHALL MATCH EXISTING CONFIGURATION).
A201384	P-617	ECS ROOM	CONDENSER WATER	–	–	ELECTRIC CONDENSATE	–	1	3/4	1/3	3450	115 / 1	–	WATSON MCDANIEL SERIES 4222GDA, DUPLEX, 3 GPM @ 20 PSI OR APPROVED EQUAL.
A201385	P-637	ECS ROOM	CONDENSER WATER	–	–	ELECTRIC CONDENSATE	–	1	3/4	1/3	3450	115 / 1	–	WATSON MCDANIEL SERIES 4222GDA, DUPLEX, 3 GPM @ 20 PSI OR APPROVED EQUAL.
A201386	P-647	ECS ROOM	CONDENSER WATER	–	–	ELECTRIC CONDENSATE	–	1	3/4	1/3	3450	115 / 1	–	WATSON MCDANIEL SERIES 4222GDA, DUPLEX, 3 GPM @ 20 PSI OR APPROVED EQUAL.

GN2 PRESSURE REDCUING STATIONS

A NO.	DEVICE NO.	VALVE TYPE	VALVE SIZE	AIR FLOW (LBS/MIN)	PORT	BODY	ACTUATOR TYPE	ACTUATOR V / PH @ 60 Hz	REMARKS
A201509 (A6837) (5049A54)	MOV-701A	BUTTERFLY	14"	250 - 1050	FULL	CS	OPEN / CLOSE	120 / 1	EXISTING TYCO VALVE, NASA PART NUMBER 100-141N (GN2) ELEC, 75M15214-PBFV-24 FSN, 482000-BE10622, NEW MOTROIZED BIFFI ICON 2000 ELECTRIC ACTUATOR OR APPROVED EQUAL, 120 VAC SINGLE PHASE CONTROL POWER TO MOTORIZED ACTUATOR, 24 VDC OPEN AND CLOSE CONTROL SIGNALS WITH 24 VDC SOURCED FROM ACTUATOR. FULL OPEN AND FULL CLOSE 24 VDC DRY CONTACTS FOR POSITION INDICATION. THE SEAT AND SEAL SHALL BE REPLACED.
A201510 (A6836) (5049A55)	MOV-701B	BUTTERFLY	14"	250 - 1050	FULL	CS	OPEN / CLOSE	120 / 1	EXISTING TYCO VALVE, NASA PART NUMBER 100-141N (GN2) ELEC, 75M15214-PBFV-24 FSN, 482000-BE10622, NEW MOTROIZED BIFFI ICON 2000 ELECTRIC ACTUATOR OR APPROVED EQUAL, 120 VAC SINGLE PHASE CONTROL POWER TO MOTORIZED ACTUATOR, 24 VDC OPEN AND CLOSE CONTROL SIGNALS WITH 24 VDC SOURCED FROM ACTUATOR. FULL OPEN AND FULL CLOSE 24 VDC DRY CONTACTS FOR POSITION INDICATION. THE SEAT AND SEAL SHALL BE REPLACED.
A199543 (A6833) (A508864) (5049A322)	PRV-702A	BUTTERFLY	14"	250 - 1050	FULL	CS	CONTROL	120 / 1	EXISTING DRESSER PRESSURE REGULATING VALVE AND PNEUMATIC ACTUATOR, NASA PART NUMBER 37-10132 W/.02, 3-18 79K07777-H40-A/79K07849-PPR-1A. NEW MASONEILAN SVI II ADVANCED PERFORMANCE DIGITAL VALVE POSITIONER OR APPROVED EQUAL, 120 VAC SINGLE PHASE CONTROL POWER TO PNEUMATIC ACTUATOR, 4-20 mA VALVE POSITION CONTROL AND 4-20 mA POSITION FEEDBACK FOR VALVE POSITION. THE VALVE SEAT AND SEAL HAVE TO BE CONFIGURED TO PROVIDE 1000 LB/MIN FLOW, INLET PRESSURE AT 150 PSIG AND OUTLET PRESSURE AT 4 PSIG.
A199544 (A6832) (A508863) (5049A323)	PRV-702B	BUTTERFLY	14"	250 - 1050	FULL	CS	CONTROL	120 / 1	EXISTING DRESSER PRESSURE REGULATING VALVE AND PNEUMATIC ACTUATOR, NASA PART NUMBER 37-10132 W/.02, 3-18 79K07777-H40-A/79K07849-PPR-1A. NEW MASONEILAN SVI II ADVANCED PERFORMANCE DIGITAL VALVE POSITIONER OR APPROVED EQUAL, 120 VAC SINGLE PHASE CONTROL POWER TO PNEUMATIC ACTUATOR, 4-20 mA VALVE POSITION CONTROL AND 4-20 mA POSITION FEEDBACK FOR VALVE POSITION. THE VALVE SEAT AND SEAL HAVE TO BE CONFIGURED TO TO PROVIDE 1000 LB/MIN FLOW, INLET PRESSURE AT 150 PSIG AND OUTLET PRESSURE AT 4 PSIG.
A201511	–	BALL	1/2"	–	FULL	BRONZE	ISOLATION	–	NIBCO BALL VALVE, MODEL T-585-70 THREADED OR APPROVED EQUAL.
A201512	–	BALL	1/2"	–	FULL	BRONZE	ISOLATION	–	NIBCO BALL VALVE, MODEL T-585-70 THREADED OR APPROVED EQUAL.

INSTRUMENTATION SCHEDULE – WATER GLYCOL & CONDENSER WATER

A NO.	DEVICE NO.	DESCRIPTION	SERVICE	REMARKS
A6665	PS-415	PRESSURE SWITCH	CONDENSER WATER	ASCO H SERIES MINATURE ADJUSTABLE PRESSURE SWITCH, MODEL HB10A214 WITH TWO N.O. FORM C CONTACTS OR APPROVED EQUAL.
A6666	PS-416	PRESSURE SWITCH	CONDENSER WATER	ASCO H SERIES MINATURE ADJUSTABLE PRESSURE SWITCH, MODEL HB10A214 WITH TWO N.O. FORM C CONTACTS OR APPROVED EQUAL.
A6871	PS-513	PRESSURE SWITCH	WATER GLYCOL	ASCO H SERIES MINATURE ADJUSTABLE PRESSURE SWITCH, MODEL HC20A214 WITH TWO N.O. FORM C CONTACTS OR APPROVED EQUAL.
A6879	PS-514	PRESSURE SWITCH	WATER GLYCOL	ASCO H SERIES MINATURE ADJUSTABLE PRESSURE SWITCH, MODEL HC20A214 WITH TWO N.O. FORM C CONTACTS OR APPROVED EQUAL.
A201156 A201157	PT-505A PT-505B	PRESSURE TRANSDUCER	WATER GLYCOL	TABER PRESSURE TRANSDUCER, MODEL 2911, NASA PART NUMBER 79K38668-A-C-13, MADE BY TELEDYNE TABER, 455 BRYANT STREET NORTH, TONAWANDA, NY, 14120. GOVERNMENT FURNISHED EQUIPMENT AND INSTALLED BY CONTRACTOR
A6675 A6676	TE-414A TE-414B	TEMPERATURE ELEMENT	CONDENSER WATER	NASA PART NUMBER 79K03040B120S, MADE BY SCIENTIFIC INSTRUMENTS, INC., 4400 W. TIFFANY DRIVE, WEST PALM BEACH, FL, 33407. THERMOWELL SHALL BE PROVIDED. GOVERNMENT FURNISHED EQUIPMENT AND INSTALLED BY CONTRACTOR
A201158 A201159	TE-506A TE-506B	TEMPERATURE ELEMENT	WATER GLYCOL	NASA PART NUMBER 79K03040B120S, MADE BY SCIENTIFIC INSTRUMENTS, INC., 4400 W. TIFFANY DRIVE, WEST PALM BEACH, FL, 33407. THERMOWELL SHALL BE PROVIDED. GOVERNMENT FURNISHED EQUIPMENT AND INSTALLED BY CONTRACTOR

ORIFICE PLATE/FLOWMETER – GLYCOL WATER & CONDENSER WATER

A NO.	DEVICE NO.	SERVICE	GPM	SIZE	REMARKS
A503625	OP-413 DPT-417A DPT-417B	CONDENSER WATER	2,095	10"	DANIEL RAISED FACE WELD NECK ORIFICE FLANGES WITH ROSEMOUNT 405 ELEMENT, 0.45 SQ. FT. BORE AREA, MAX PRESSURE DROP 0.5 FT H20 OR APPROVED EQUAL. TWO DIFFERENTIAL PRESSURE TRANSMITTERS NASA PART NUMBER 79K38668BC04 GOVERNMENT FURNISHED EQUIPMENT AND INSTALLED BY CONTRACTOR
A201190	OP-515 DPT-516A DPT-516B	WATER GLYCOL	1,330	8"	DANIEL RAISED FACE WELD NECK ORIFICE FLANGES WITH ROSEMOUNT 405 ELEMENT, 0.20 SQ. FT. BORE AREA, MAX PRESSURE DROP 3.0 FT H20 OR APPROVED EQUAL. TWO DIFFERENTIAL PRESSURE TRANSMITTERS NASA PART NUMBER 79K38668BC04 GOVERNMENT FURNISHED EQUIPMENT AND INSTALLED BY CONTRACTOR

FLOWMETER – AIR/GN2

A NO.	DEVICE NO.	SERVICE	PURGE CIRCUIT	AIR FLOW (LBS/MIN)	SIZE	REMARKS
A199285	FM-207 DPT-207A DPT-207B	AIR	6-N, CS/IT	50 - 225	14"	WYATT VENTURI MODEL LVM WITH 150# FLANGED END CONNECTIONS CONSTRUCTED FROM FRP, CARBON STEEL AND 304L STAINLESS STEEL OR APPROVED EQUAL. TWO DIFFERENTIAL PRESSURE TRANSMITTERS NASA PART NUMBER 79K38668BC05 GOVERNMENT FURNISHED EQUIPMENT AND INSTALLED BY CONTRACTOR
A199308	FM-217 DPT-217A DPT-217B	AIR	2-N, CS/FS	50 - 200	14"	WYATT VENTURI MODEL LVM WITH 150# FLANGED END CONNECTIONS CONSTRUCTED FROM FRP, CARBON STEEL AND 304L STAINLESS STEEL OR APPROVED EQUAL. TWO DIFFERENTIAL PRESSURE TRANSMITTERS NASA PART NUMBER 79K38668BC05 GOVERNMENT FURNISHED EQUIPMENT AND INSTALLED BY CONTRACTOR
A199331	FM-227 DPT-227A DPT-227B	AIR	1-N, SM	50 - 200	14"	WYATT VENTURI MODEL LVM WITH 150# FLANGED END CONNECTIONS CONSTRUCTED FROM FRP, CARBON STEEL AND 304L STAINLESS STEEL OR APPROVED EQUAL. TWO DIFFERENTIAL PRESSURE TRANSMITTERS NASA PART NUMBER 79K38668BC05 GOVERNMENT FURNISHED EQUIPMENT AND INSTALLED BY CONTRACTOR
A199375	FM-237 DPT-237A DPT-237B	AIR	7-N, CS/AFT	50 - 300	16"	WYATT VENTURI MODEL LVM WITH 150# FLANGED END CONNECTIONS CONSTRUCTED FROM FRP, CARBON STEEL AND 304L STAINLESS STEEL OR APPROVED EQUAL. TWO DIFFERENTIAL PRESSURE TRANSMITTERS NASA PART NUMBER 79K38668BC05 GOVERNMENT FURNISHED EQUIPMENT AND INSTALLED BY CONTRACTOR
A199352	FM-247 DPT-247A DPT-247B	AIR	5-N, SPARE	50 - 125	10"	WYATT VENTURI MODEL LVM WITH 150# FLANGED END CONNECTIONS CONSTRUCTED FROM FRP, CARBON STEEL AND 304L STAINLESS STEEL OR APPROVED EQUAL. TWO DIFFERENTIAL PRESSURE TRANSMITTERS NASA PART NUMBER 79K38668BC05 GOVERNMENT FURNISHED EQUIPMENT AND INSTALLED BY CONTRACTOR
A199394	FM-257 DPT-257A DPT-257B	AIR	12-S, LAS	50 - 150	12"	WYATT VENTURI MODEL LVM WITH 150# FLANGED END CONNECTIONS CONSTRUCTED FROM FRP, CARBON STEEL AND 304L STAINLESS STEEL OR APPROVED EQUAL. TWO DIFFERENTIAL PRESSURE TRANSMITTERS NASA PART NUMBER 79K38668BC05 GOVERNMENT FURNISHED EQUIPMENT AND INSTALLED BY CONTRACTOR
A199413	FM-267 DPT-267A DPT-267B	AIR	11-S, EC/CC	50 - 150	12"	WYATT VENTURI MODEL LVM WITH 150# FLANGED END CONNECTIONS CONSTRUCTED FROM FRP, CARBON STEEL AND 304L STAINLESS STEEL OR APPROVED EQUAL. TWO DIFFERENTIAL PRESSURE TRANSMITTERS NASA PART NUMBER 79K38668BC05 GOVERNMENT FURNISHED EQUIPMENT AND INSTALLED BY CONTRACTOR
A199436	FM-277 DPT-277A DPT-277B	AIR	8-S, CS/ENG	50 - 250	14"	WYATT VENTURI MODEL LVM WITH 150# FLANGED END CONNECTIONS CONSTRUCTED FROM FRP, CARBON STEEL AND 304L STAINLESS STEEL OR APPROVED EQUAL. TWO DIFFERENTIAL PRESSURE TRANSMITTERS NASA PART NUMBER 79K38668BC05 GOVERNMENT FURNISHED EQUIPMENT AND INSTALLED BY CONTRACTOR
A199455	FM-287 DPT-287A DPT-287B	AIR	9-S, SPARE	50 - 250	14"	WYATT VENTURI MODEL LVM WITH 150# FLANGED END CONNECTIONS CONSTRUCTED FROM FRP, CARBON STEEL AND 304L STAINLESS STEEL OR APPROVED EQUAL. TWO DIFFERENTIAL PRESSURE TRANSMITTERS NASA PART NUMBER 79K38668BC05 GOVERNMENT FURNISHED EQUIPMENT AND INSTALLED BY CONTRACTOR
A199474	FM-297 DPT-297A DPT-297B	AIR	10-S, SPARE	50 - 250	14"	WYATT VENTURI MODEL LVM WITH 150# FLANGED END CONNECTIONS CONSTRUCTED FROM FRP, CARBON STEEL AND 304L STAINLESS STEEL OR APPROVED EQUAL. TWO DIFFERENTIAL PRESSURE TRANSMITTERS NASA PART NUMBER 79K38668BC05 GOVERNMENT FURNISHED EQUIPMENT AND INSTALLED BY CONTRACTOR
A199245	FM-307 DPT-307A DPT-307B	AIR	3-L, ICPS	50 - 175	12"	WYATT VENTURI MODEL LVM WITH 150# FLANGED END CONNECTIONS CONSTRUCTED FROM FRP, CARBON STEEL AND 304L STAINLESS STEEL OR APPROVED EQUAL. TWO DIFFERENTIAL PRESSURE TRANSMITTERS NASA PART NUMBER 79K38668BC05 GOVERNMENT FURNISHED EQUIPMENT AND INSTALLED BY CONTRACTOR
A199266	FM-317 DPT-317A DPT-317B	AIR	4-L, SPARE	50 - 75	8"	WYATT VENTURI MODEL LVM WITH 150# FLANGED END CONNECTIONS CONSTRUCTED FROM FRP, CARBON STEEL AND 304L STAINLESS STEEL OR APPROVED EQUAL. TWO DIFFERENTIAL PRESSURE TRANSMITTERS NASA PART NUMBER 79K38668BC05 GOVERNMENT FURNISHED EQUIPMENT AND INSTALLED BY CONTRACTOR

NOTES:

1. ALL ITEMS NOTED WITH NASA PART NUMBERS (PRESSURE TRANSDUCERS, DIFFERENTIAL PRESSURE TRANSMITTERS, MOISTURE & TEMPERATURE TRANSMITTERS, AND TEMPERATURE ELEMENTS) WILL BE GOVERNMENT FURNISHED EQUIPMENT – PROVIDED BY OTHER, INSTALLED BY CONTRACTOR.

SYM	ZONE	DESCRIPTION	DATE	APPROVED

REVISIONS

JACOBS
Jacobs Technology Inc.

SIGNATURES		DATE
DRAWN	MIKE VANHOOSE	3/07/14
CHECKED	BRIAN GODFREY	3/07/14
SUBMITTED	RAVI MUTHIAH	3/07/14
ST OF LICENSURE: FL		
LICENSE NO: 68076		
APPROVED	GLEN WARD	3/07/14
	DREW GILLESPIE	3/07/14

NATIONAL AERONAUTICS AND SPACE ADMINISTRATION
JOHN F. KENNEDY SPACE CENTER, NASA
KENNEDY SPACE CENTER, FLORIDA

KSC LAUNCH PAD 39-B
ENVIRONMENTAL CONTROL SYSTEM (ECS) REFURBISHMENT

MECHANICAL INSTALLATION EQUIPMENT SCHEDULES CONTINUED

M-046

FILE NO. | SIZE F | DWG.NO. 79K39602 | REV

PCN. NO. 98898 | SHEET 49 OF 187

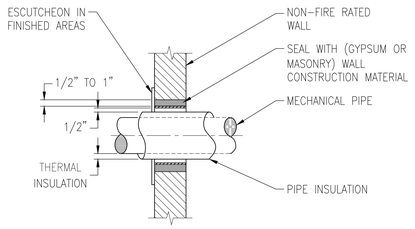

NON-FIRE RATED WALL

1 INTERIOR WALL PENETRATION
NO SCALE

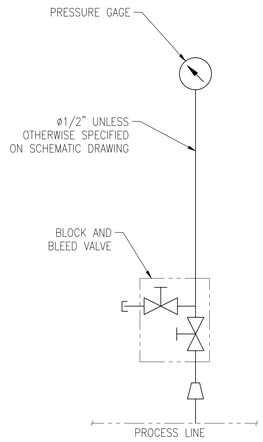

2 PRESSURE GAGE DETAIL
NO SCALE

STRAINER SIZE (IN.) UP TO 21	BLOW-OFF OUTLET MIN. SIZE (IN.)
2	3/4
3 & 4	1
5 & ABOVE	2

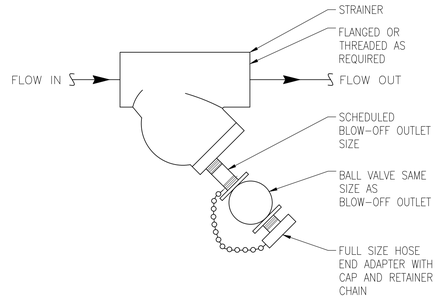

3 STRAINER ASSEMBLY
NO SCALE

NOTES:

1. TYPICAL PIPING DETAILS SHOWN ON THIS DRAWING ARE APPLICABLE FOR WATER/GLYCOL, CONDENSER WATER, STEAM, CONDENSATE, AND GN2 PIPING.

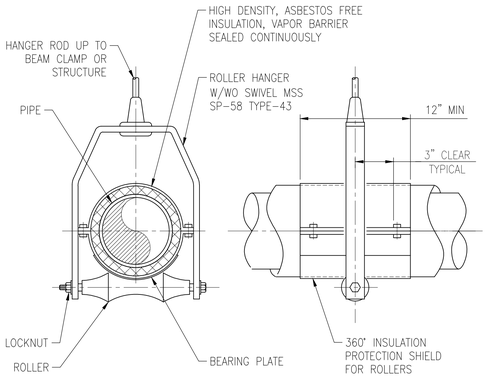

COLD INSULATED PIPE WITH VAPOR BARRIER FOR PIPE SIZE: 8" MAX.

NOTE:
VAPOR BARRIER SHALL EXTEND 2" BEYOND THE PROTECTION SHIELD AND OVERLAP THE OUTSIDE CIRCUMFERENCE BY 2" MINIMUM.

4 PIPE SUPPORT DETAIL
NO SCALE

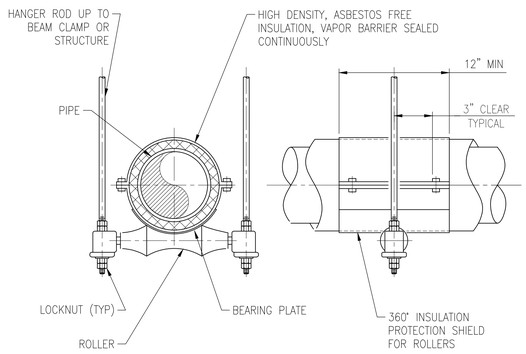

COLD INSULATED PIPE WITH VAPOR BARRIER FOR PIPE SIZE: 8" MAX.

NOTE:
VAPOR BARRIER SHALL EXTEND 2" BEYOND THE PROTECTION SHIELD AND OVERLAP THE OUTSIDE CIRCUMFERENCE BY 2" MINIMUM.

5 PIPE SUPPORT DETAIL
NO SCALE

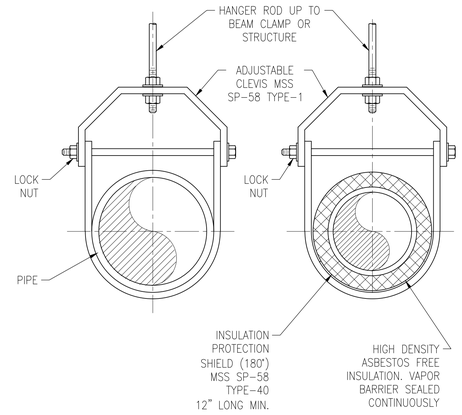

BARE PIPE
FOR PIPE SIZES TO: 20"
TEMPERATURES TO: 100°F MAX.
AXIAL MOVEMENT: 1"

INSULATED COLD PIPE
FOR PIPE SIZES TO: 20"
TEMPERATURES TO: 100°F MAX.
AXIAL MOVEMENT: 1"

NOTE:
VAPOR BARRIER SHALL EXTEND 2" BEYOND THE PROTECTION SHIELD AND OVERLAP THE OUTSIDE CIRCUMFERENCE BY 2" MINIMUM.

6 PIPE SUPPORT DETAIL
NO SCALE

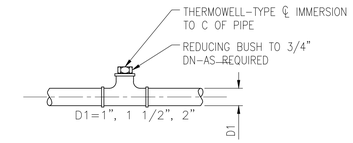

SCREWED CONNECTIONS

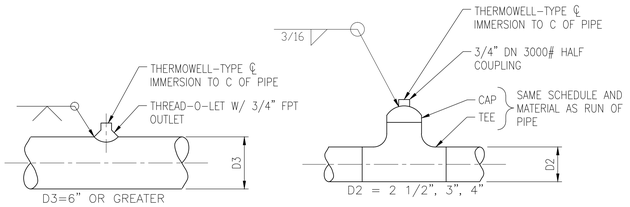

WELDED CONNECTIONS

7 THERMOWELL CONNECTION
NO SCALE

SYM	ZONE	DESCRIPTION	DATE	APPROVED
		REVISIONS		

JACOBS
Jacobs Technology Inc.

SIGNATURES		DATE
DRAWN	MIKE VANHOOSE	3/07/14
CHECKED	HANNAH LYNCH	3/07/14
SUBMITTED	RAVI MUTHIAH	3/07/14
ST OF LICENSURE: FL LICENSE NO: 68076		
APPROVED	GLEN WARD	3/07/14
	DREW GILLESPIE	3/07/14

NATIONAL AERONAUTICS AND SPACE ADMINISTRATION
JOHN F. KENNEDY SPACE CENTER, NASA
KENNEDY SPACE CENTER, FLORIDA

KSC LAUNCH PAD 39-B
ENVIRONMENTAL CONTROL SYSTEM (ECS) REFURBISHMENT
MECHANICAL INSTALLATION
TYPICAL PIPING SUPPORT DETAILS

M-047

FILE NO. | SIZE F | DWG.NO. 79K39602 | REV
PCN. NO. 98898 | SHEET 50 OF 187

P:\95452\DRAWINGS\PROC\M-049.DWG
20-DEC-2013 12:34
WITHERS

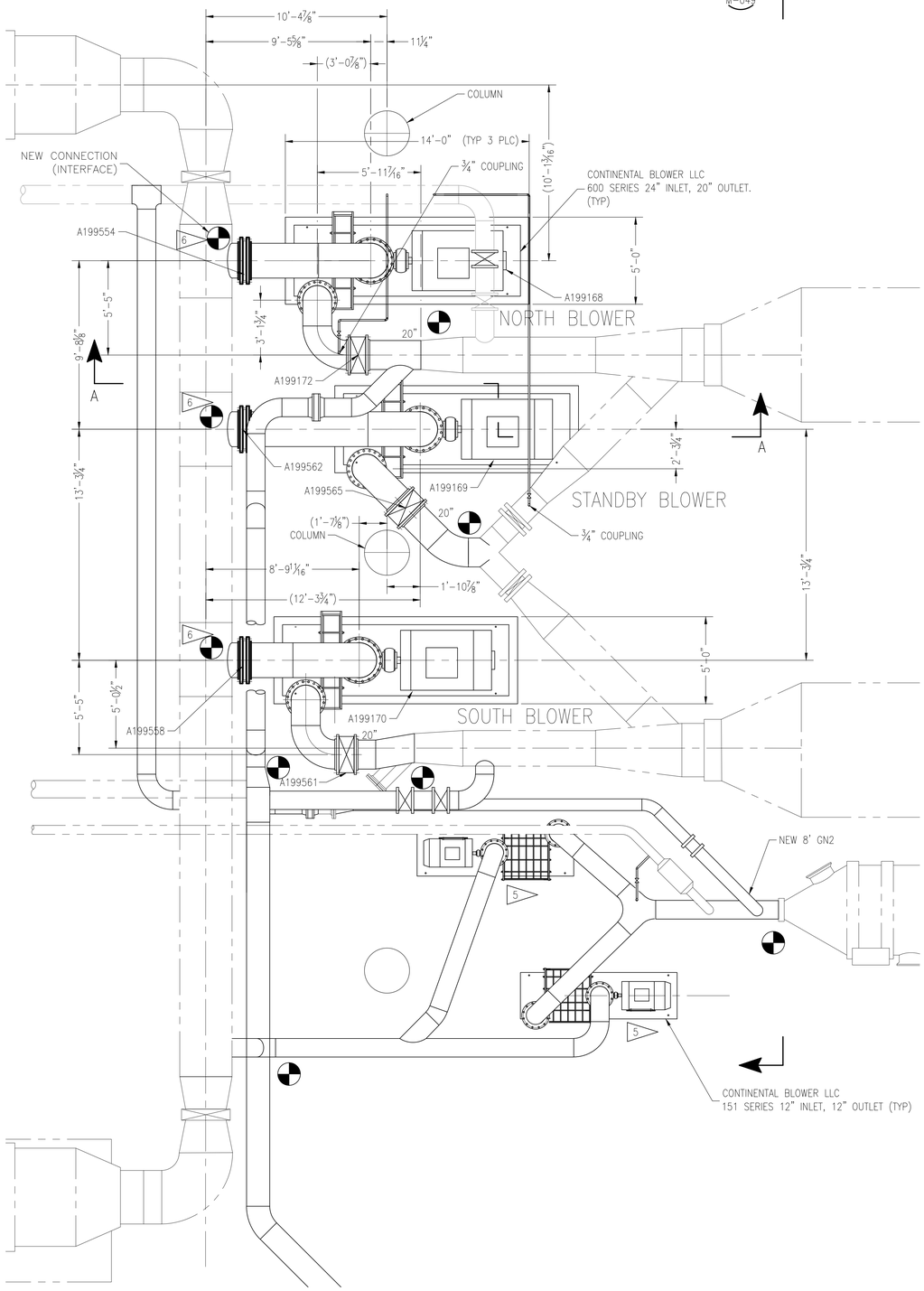

ECS PURGE BLOWER LOCATION PLAN VIEW
SCALE: 1:40

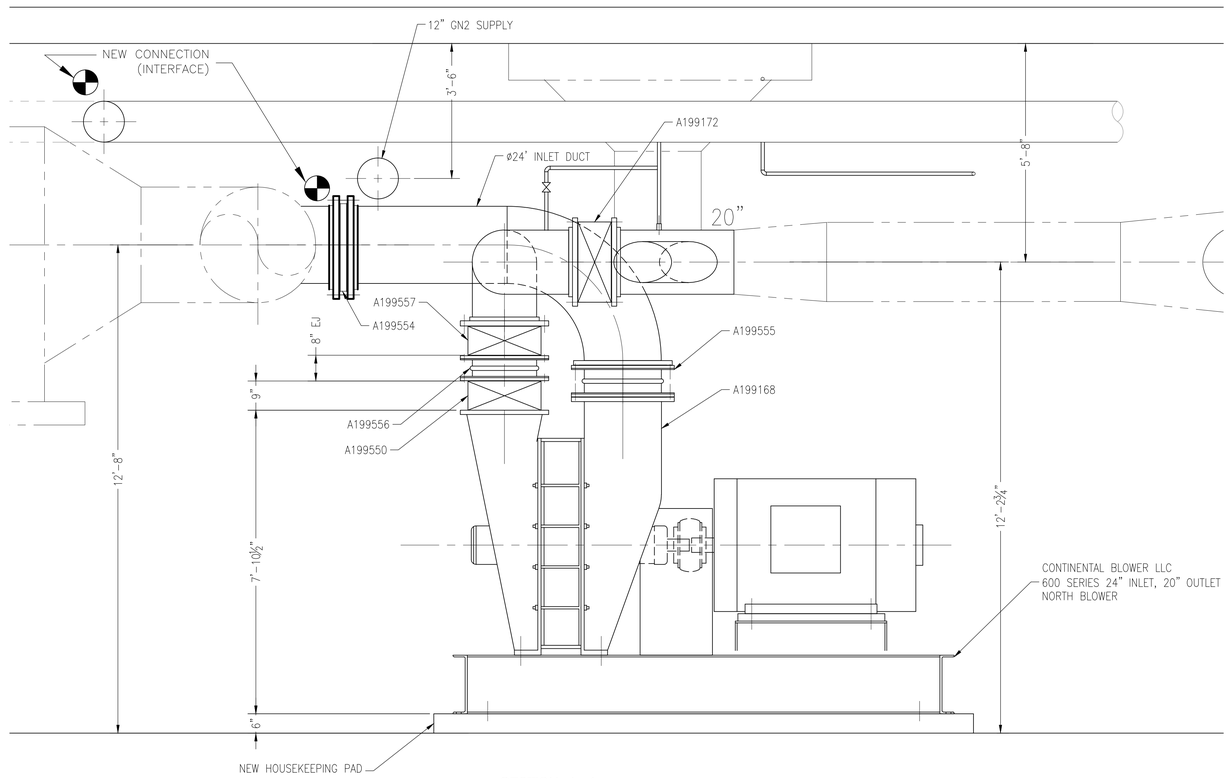

SECTION A-A
SCALE: 1:20

NOTES:

1. NOT USED.
2. NOT USED.
3. NOT USED.
4. SEE DRAWINGS M-007 AND M-010 FOR SCHEMATICS.

5 LOCATE NEW ICPS BLOWERS ON EXISTING LPAC PADS.

6 ROTATE TEE OUTLET FROM ORIGINAL ANGLE TO HORIZONTAL THROUGH ROTATION AT FLANGE CONNECTION AND/OR CUTTING AND REWELDING SPOOL PIECE. SEE DRAWING M-024 FOR DUCT CONSTRUCTION DETAILS.

SYM	ZONE	DESCRIPTION	DATE	APPROVED
		REVISIONS		

JACOBS
Jacobs Technology Inc.

SIGNATURES		DATE
DRAWN	MIKE VANHOOSE	3/07/14
CHECKED	BRIAN GODFREY	3/07/14
SUBMITTED	RAVI MUTHIAH	3/07/14
ST OF LICENSURE: FL LICENSE NO: 68076		
APPROVED	GLEN WARD	3/07/14
	DREW GILLESPIE	3/07/14

NATIONAL AERONAUTICS AND SPACE ADMINISTRATION
JOHN F. KENNEDY SPACE CENTER, NASA
KENNEDY SPACE CENTER, FLORIDA

KSC LAUNCH PAD 39-B
ENVIRONMENTAL CONTROL SYSTEM (ECS) REFURBISHMENT

ECS SYSTEM PURGE AIR DUCTING MODIFICATION PLAN VIEW

FILE NO.	SIZE	DWG.NO.	REV
M-048	F	79K39602	
PCN. NO. 98898		SHEET 51 OF 187	

P:\95452\DRAWINGS\PROC\M-048.DWG
28-JAN-2014 08:52
HARDYDR

NOTES:

1. NOT USED.
2. NOT USED.
3. NOT USED.
4. SEE DRAWINGS M-007, M-008, M-009 AND M-010 FOR SCHEMATICS.

5 SEE DWG S-006 FOR CONCRETE FOUNDATION AND BLOWER ASSEMBLY PLACEMENT DETAILS.

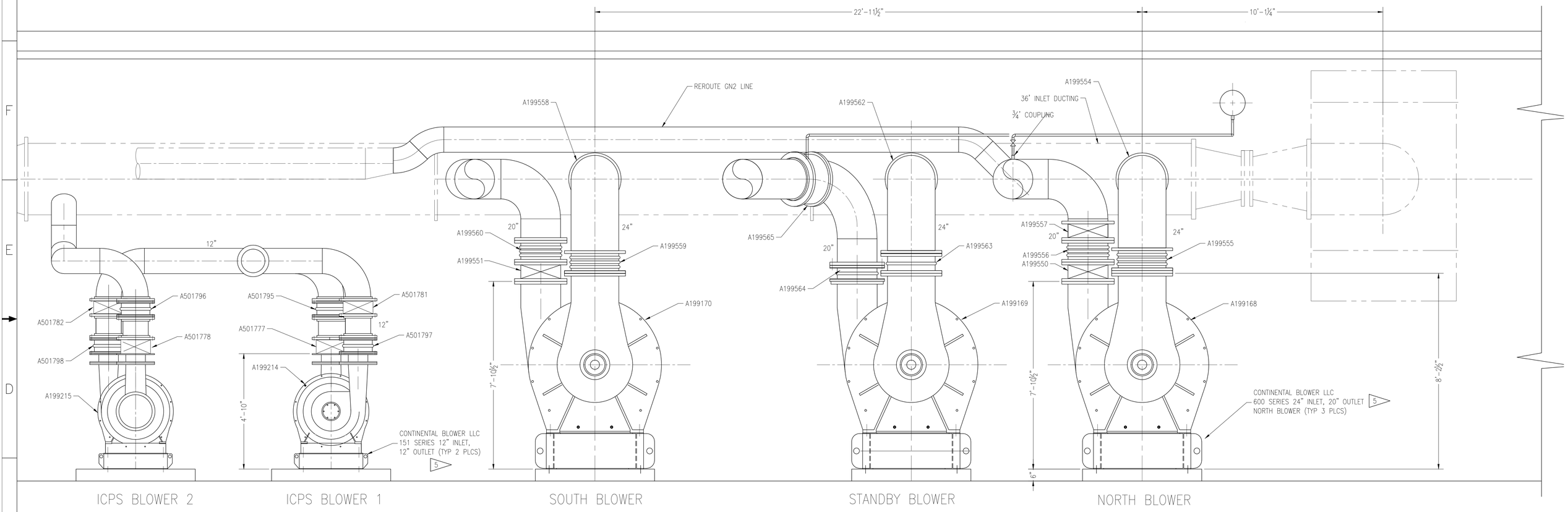

SECTION EE
SCALE: 1:20
M-048

SYM	ZONE	DESCRIPTION	DATE	APPROVED
REVISIONS				

JACOBS
Jacobs Technology Inc.

SIGNATURES		DATE
DRAWN	MIKE VANHOOSE	3/07/14
CHECKED	BRIAN GODFREY	3/07/14
SUBMITTED	RAVI MUTHIAH	3/07/14
ST OF LICENSURE: FL LICENSE NO: 68076		
APPROVED	GLEN WARD	3/07/14
	DREW GILLESPIE	3/07/14

NATIONAL AERONAUTICS AND SPACE ADMINISTRATION
JOHN F. KENNEDY SPACE CENTER, NASA
KENNEDY SPACE CENTER, FLORIDA

KSC LAUNCH PAD 39-B
ENVIRONMENTAL CONTROL SYSTEM (ECS) REFURBISHMENT
ECS SYSTEM PURGE AIR
DUCTING MODIFICATION
ELEVATION VIEW

M-049

FILE NO.	SIZE	DWG.NO.	REV
	F	79K39602	

PCN. NO. 98898 SHEET 52 OF 187

P:\95452\DRAWINGS\PROC\M-049.DWG
28-JAN-2014 08:32
HARDYDR

NOTES:

1. EXISTING SPRINKLER HEADS AND PIPING UNDER PLENUMS AND DUCTING SHALL BE REMOVED BEFORE STARTING DEMO WORK OF EXISTING PURGE AIR CIRCUITS. CAP PIPE TO PROTECT FROM DIRT AND DEBRIS DURING CONSTRUCTION.

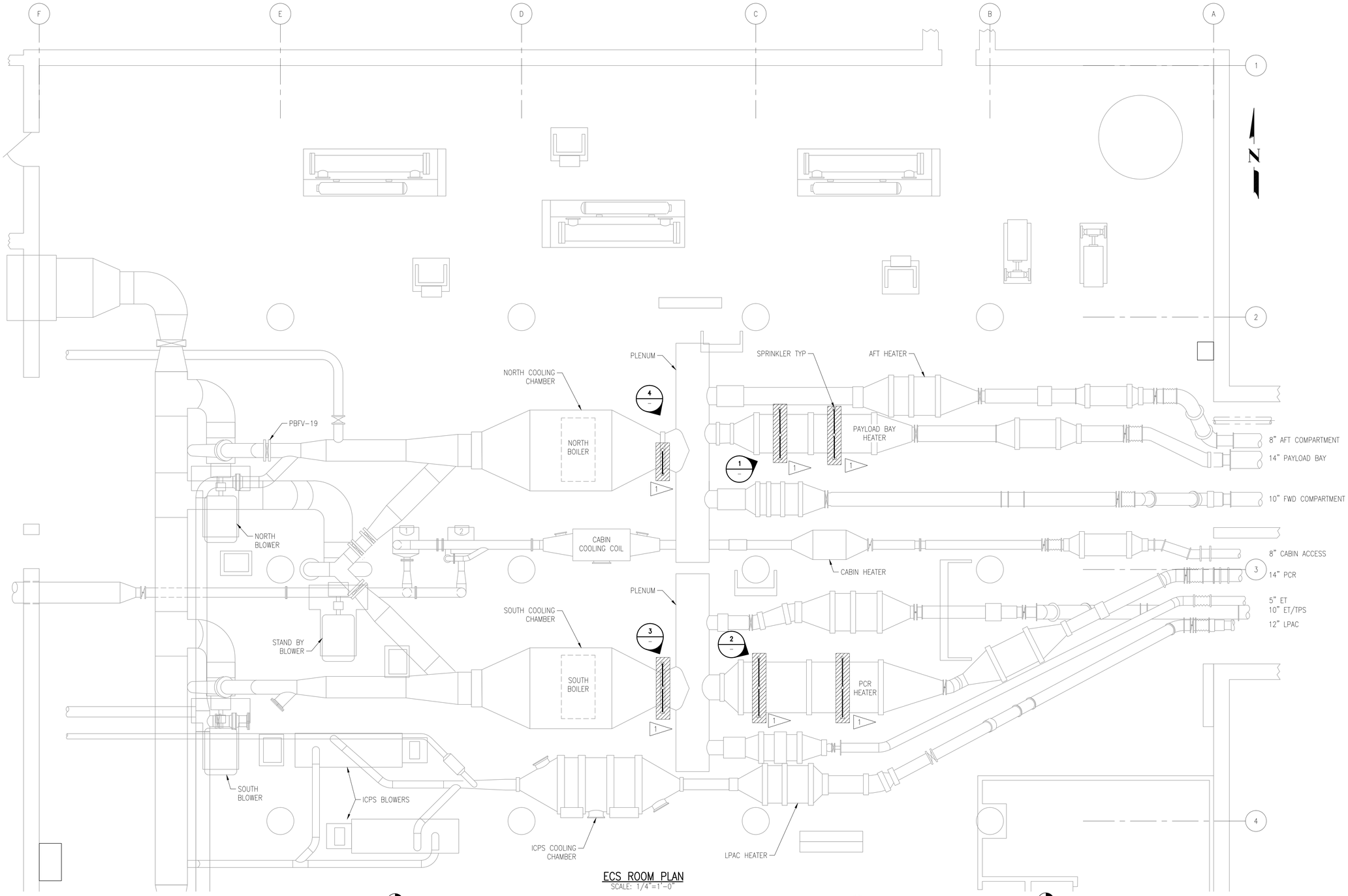

ECS ROOM PLAN
SCALE: 1/4"=1'-0"

LEGENDS:

DEMO

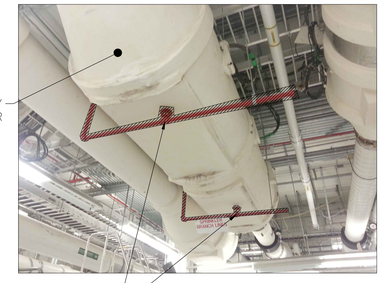

PIC 1

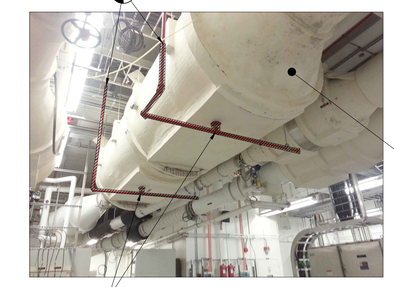

PIC 2

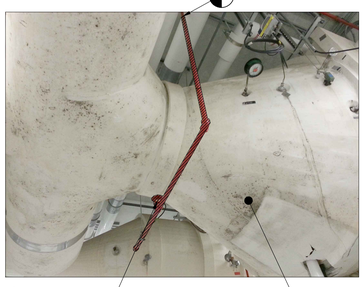

PIC 3

PIC 4

SYM	ZONE	DESCRIPTION	DATE	APPROVED
		REVISIONS		

JACOBS
Jacobs Technology Inc.

SIGNATURES		DATE
DRAWN	MIKE VANHOOSE	3/07/14
CHECKED	BRIAN GODFREY	3/07/14
SUBMITTED	RAVI MUTHIAH	3/07/14
ST OF LICENSURE: FL LICENSE NO: 68076		
APPROVED	GLEN WARD	3/07/14
	S. HUNT	3/07/14

NATIONAL AERONAUTICS AND SPACE ADMINISTRATION
JOHN F. KENNEDY SPACE CENTER, NASA
KENNEDY SPACE CENTER, FLORIDA

KSC LAUNCH PAD 39-B
ENVIRONMENTAL CONTROL SYSTEM (ECS) REFURBISHMENT
ECS ROOM
FIRE PROTECTION
DEMOLITION

FILE NO.	SIZE F	DWG.NO.	REV
		79K39602	
PCN. NO. 98898		SHEET 53 OF 187	

FP-001

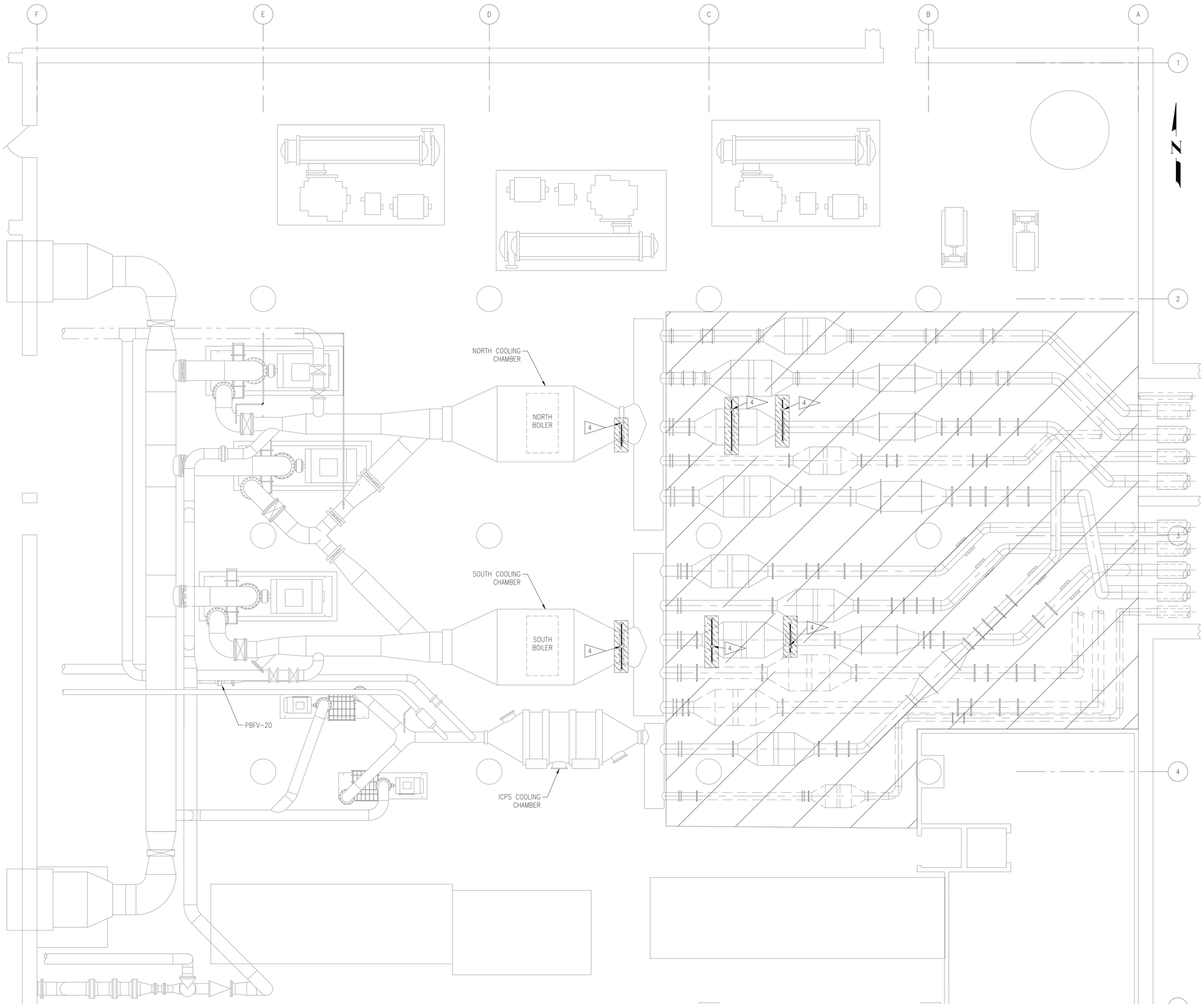

ECS ROOM FIRE PROTECTION
SCALE: 1/4"=1'-0"

NOTES:

1. ECS AREAS ARE ORDINARY HAZARD GROUP 2 WITH 0.2 GPM/SQ. FT. DENSITY PER NFPA 13. NEW SPRINKLER HEADS SHALL BE INSTALLED IN THE AREAS INDICATED TO MEET THIS REQUIREMENT. NEW SPRINKLER HEADS SHALL BE 1/2-INCH TYCO MODEL TY-B OR APPROVED EQUAL WITH A K-FACTOR OF 5.6 AND A TEMPERATURE RATING OF 155°F TO MATCH EXISTING.
2. PROVIDE FIRE PROTECTION SYSTEM MATERIALS AND EQUIPMENT CONFORMING TO THE REQUIREMENTS OF UL FIRE PROT DIR OR THE FM APP GUIDE. PROVIDE MATERIALS AND EQUIPMENT COMPATIBLE WITH THE EXISTING SYSTEM.
3. PIPING, SUPPORTS, HEADS, AND VALVES (IF REQUIRED) SHALL BE IN ACCORDANCE WITH SPECIFICATION SECTION 21 13 00.00 98 FIRE SUPPRESSION SPRINKLER SYSTEM.

4 INSTALL NEW SPRINKLER HEADS AS REQUIRED TO MEET FIRE PROTECTION REQUIREMENTS FROM NOTE 1. ROUTE NEW PIPING TO LOCATE SPRINKLER HEADS IN EXISTING LOCATIONS.

5. AREAS NOT SHADED ARE NOT AFFECTED BY THE CHANGES FROM THIS CONTRACT. THESE AREAS MAY REMAIN AS IS.

LEGENDS:

THIS SYMBOL REPRESENTS AN AREA THAT HAS NEW OR REPLACED PIPING AND DUCTING. THESE AREAS SHALL BE EVALUATED FOR IMPACTS TO THE FIRE PROTECTION SYSTEM.

NEW DUCTING AND/OR PIPING IN THIS AREA MAY AFFECT EXISTING SPRINKLER PLACEMENT. NEW SPRINKLERS SHALL BE LOCATED AS NEEDED TO MAINTAIN FIRE PROTECTION REQUIREMENTS. CONTRACTOR SHALL EVALUATE EXISTING SPRINKLERS IN RELATION TO NEW DUCT AND INFORM CONTRACTING OFFICER OF CONFLICTS.

SYM	ZONE	DESCRIPTION	DATE	APPROVED
REVISIONS				

JACOBS
Jacobs Technology Inc.

SIGNATURES		DATE
DRAWN	MIKE VANHOOSE	3/07/14
CHECKED	BRIAN GODFREY	3/07/14
SUBMITTED	RAVI MUTHIAH	3/07/14
ST OF LICENSURE: FL LICENSE NO: 68076		
APPROVED	GLEN WARD	3/07/14
	S. HUNT	3/07/14

NATIONAL AERONAUTICS AND SPACE ADMINISTRATION
JOHN F. KENNEDY SPACE CENTER, NASA
KENNEDY SPACE CENTER, FLORIDA

KSC LAUNCH PAD 39-B
ENVIRONMENTAL CONTROL SYSTEM (ECS) REFURBISHMENT
ECS ROOM
FIRE PROTECTION

FILE NO.	SIZE	DWG.NO.	REV
	F	79K39602	
PCN. NO. 98898		SHEET 54 OF 187	

FP-002

DEMOLITION NOTES

1. EXTENT OF DEMOLITION WORK IS SHOWN ON THE DRAWINGS. REMOVE FROM SITE ALL DEBRIS, RUBBISH AND OTHER MATERIALS RESULTING FROM DEMOLITION OPERATIONS.
2. DO NOT CLOSE OR OBSTRUCT STREETS, WALKS, OR OTHER OCCUPIED OR USED FACILITIES WITHOUT PERMISSION FROM THE PROJECT MANAGER.
3. THE CONTRACTOR SHALL CONDUCT ALL ACTIVITIES IN ACCORDANCE WITH STANDARD INDUSTRY SAFETY REGULATIONS.
4. THE CONTRACTOR SHALL PROVIDE SHORING, BRACING OR SUPPORT TO PREVENT MOVEMENT, SETTLEMENT, UNDERMINING AND/OR COLLAPSE OF EXISTING EQUIPMENT FOUNDATION ADJACENT TO DEMOLITION.
5. ADJACENT EXISTING STRUCTURES SHALL NOT BE DAMAGED. ANY DAMAGE OTHER THAN SUPERFICIAL TO THE EXISTING STRUCTURES, EQUIPMENT AND COMPONENTS SHALL BE REPORTED TO THEPROJECT MANAGER IMMEDIATELY.
6. CONTRACTOR SHALL VERIFY ALL DEMOLITION LIMITS BEFORE PROCEEDING WITH WORK.

GENERAL CONDITIONS:

1. THE CONSTRUCTION SUBCONTRACTOR SHALL VISIT THE SITE AND BECOME FAMILIAR WITH THE SITE PRIOR TO SIGNING CONTRACT.
2. ALL MATERIALS AND COMPONENTS INDICATED TO BE REMOVED FROM THE SITE SHALL BE HAULED OFF SITE AND DISPOSED OFF PROPERLY IN ACCORDANCE WITH APPLICABLE CODES.
3. PRIOR TO START OF WORK AND PRODUCING SHOP DRAWINGS AND FABRICATION, THE CONSTRUCTION SUBCONTRACTOR SHALL VERIFY ALL EXISTING CONDITIONS INCLUDING BUT NOT LIMITED TO ELEVATIONS, MATERIALS, DIMENSIONS, ETC. THE CONTRACTOR SHALL REPORT ANY DISCREPANCIES TO THE CONTRACTING OFFICER.
4. THE CONSTRUCTION SUBCONTRACTOR IS RESPONSIBLE FOR THE DESIGN AND INSTALLATION OF ALL TEMPORARY SHORING AND BRACING. THE CONSTRUCTION SUBCONTRACTOR SHALL BE RESPONSIBLE FOR ANY DAMAGES INCURRED DUE TO IMPROPER SHORING AND BRACING DURING CONSTRUCTION.
5. SEVERAL TOWER COMPONENTS, WALLS, ROOF ETC. WILL NEED TO BE DEMOLISHED, OTHERS WILL REMAIN AND BE REINFORCED AND BECOME PART OF THE FINAL STRUCTURE. THE CONSTRUCTION SUBCONTRACTOR SHALL PROVIDE AND EMPLOY ALL NECESSARY MEASURE TO INSURE THE SAFE REMOVAL OF ALL ITEMS TO BE DEMOLISHED WITHOUT DAMAGING THE ITEMS THAT ARE TO REMAIN. ANY ITEMS THAT ARE NOT NOTED TO REMAIN AND/OR SALVAGE WHICH MAY BE DAMAGED DUE TO NEGLIGENCE WILL BE PAID FOR BY THE CONTRACTOR(S).
6. THE CONSTRUCTION SUBCONTRACTOR SHALL ARRANGE AND PAY FOR ALL INSPECTION AND TESTING UNLESS OTHERWISE AGREED UPON WITH THE OWNER PRIOR TO BID BEING APPROVED.

GENERAL NOTES:

1. QUALITY OF CONSTRUCTION REQUIRED, PERFORMANCE LEVELS OF WORKMANSHIP, MANUFACTURING AND INDUSTRY STANDARDS, STRENGTH AND PHYSICAL REQUIREMENTS OF MATERIALS, CONFORMANCE TO CODES AND REGULATIONS, GUARANTEES AND OTHER PROJECT REQUIREMENTS ARE SPECIFIED IN THE PROJECT MANUAL.
2. THE CONSTRUCTION SUBCONTRACTOR SHALL PERFORM ALL WORK IN COORDINATION WITH ALL DRAWINGS AND INFORMATION RELATED TO THE STRUCTURAL WORK. ANY CHANGES TO THE EQUIPMENT REQUIRING CHANGES TO THE STRUCTURAL SYSTEMS SHALL BE REDESIGNED BY A PROFESSIONAL ENGINEER AT NO COST TO THE OWNER AND SUBMITTED TO THE DESIGN CONTRACTOR FOR REVIEW. SUBMITTAL SHALL BE ACKNOWLEDGED AND ACCEPTED IN WRITING BEFORE BEGINNING CONSTRUCTION.
3. DURING REHABILITATION PORTIONS OF THE STRUCTURE MAY BECOME UNSTABLE AND REMAIN SO UNTIL ALL OF THE STRUCTURAL ELEMENTS ARE IN PLACE AND FULLY CONNECTED AND ATTAINED THEIR FULL DESIGN STRENGTH. THE STRUCTURAL DRAWINGS REPRESENT THE FINISHED CONDITION AND DO NOT SHOW MEANS AND METHODS OF CONSTRUCTION. THE CONSTRUCTION SUBCONTRACTOR IS FULLY RESPONSIBLE FOR PROVIDING ALL MEANS OF ERECTION, BRACING, SHORING, TEMPORARY SUPPORTS AND SEQUENCING TO STABILIZE THE STRUCTURE UNTIL THE PERMANENT SYSTEMS ARE IN PLACE.
4. IT IS SOLELY THE CONSTRUCTION SUBCONTRACTOR'S RESPONSIBILITY TO DETERMINE ERECTION PROCEDURES AND SEQUENCE TO INSURE THE SAFETY OF THE STRUCTURE AND ITS COMPONENT PARTS DURING ERECTION. THIS INCLUDES, BUT IS NOT LIMITED TO, THE ADDITION OF WHATEVER TEMPORARY BRACING, GUYS OR TIE-DOWNS AS MAY BE NECESSARY.
5. THE REHABILITATION OF THE STRUCTURE REQUIRES DEMOLITION OF NUMEROUS STRUCTURAL ELEMENTS THAT SUPPORT EXISTING STRUCTURAL ELEMENTS AND MISCELLANEOUS COMPONENTS THAT ARE TO REMAIN PRIOR TO THE START OF DEMOLITION WORK. THE CONSTRUCTION SUBCONTRACTOR SHALL PROVIDE TEMPORARY SUPPORTS TO INSURE THE STABILITY AND SAFETY OF ALL COMPONENTS THAT ARE TO REMAIN.
6. IF COATING ON THE EXISTING STEEL OR MATERIALS TO BE REMOVED WERE FOUND TO CONTAIN HAZARDOUS CONSTITUENTS (I.E. ASBESTOS, LEAD CHROMIUM, PCB'S, ETC.) THEY SHALL BE REMOVED IN ACCORDANCE WITH ALL APPLICABLE OSHA (I.E. 29 CFR 1926).
7. DISPOSAL OF ALL REMOVED ITEMS SHALL BE PERFORMED IN ACCORDANCE WITH ALL APPLICABLE EPA/FDEP (I.E. RCRA, CWA, CAA, TSCA, ETC.), STATE OF FLORIDA AND NASA REQUIREMENTS FOR DISPOSAL OF RECYCLABLE MATERIALS, ASBESTOS, HAZARDOUS WASTE, SOLID WASTE, ETC..

STRUCTURAL STEEL:

1. ALL STRUCTURAL ROLLED WIDE FLANGE SHAPES SHALL BE ASTM A992 GRADE 50. ALL STRUCTURAL STEEL TUBES SHALL BE ASTM A500, GRADE B. ALL STEEL. PLATE SHALL BE ASTM A36.

1. All FABRICATION, ASSEMBLY AND ERECTION OF MISCELLANEOUS STEEL SHALL BE PERFORMED IN ACCORDANCE WITH THE LATEST AMERICAN INSTITUTE OF STEEL CONSTRUCTION (AISC) SPECIFICATION FOR STRUCTURAL STEEL BUILDINGS.
2. ALL FABRICATION STEEL SHALL BE PAINTED IN ACCORDANCE WITH THE TECHNICAL SPECIFICATIONS.
3. All BOLTING ASSOCIATED WITH THE FABRICATION, ASSEMBLY AND ERECTION SHALL BE PERFORMED IN ACCORDANCE WITH THE LATEST SPECIFICATION FOR STRUCTURAL JOINTS USING ASTM WITH THREADS EXCLUDE FROM THE PLANE OF SHEAR. SNUG TIGHT CONNECTIONS ARE PERMITTED UNLESS NOTED. ALL BOLTS, NUTS AND WASHERS TO BE HOT DIP GALVANIZED.
4. BRACING SHALL HAVE A MINIMUM OF TWO BOLTS PERMITTED UNLESS NOTED ON THE CONTRACT DRAWINGS.
5. WHERE ADHESIVE OR EXPANSION ANCHORS ARE CALLED OUT ON THE DRAWINGS, HILTI ANCHORING SYSTEM IS USED AS REFERENCE STANDARD. THE SUBCONTRACTOR MAY USE OTHER SYSTEM OF EQUIVALENT LOAD CARRYING CAPACITY.
6. REMOVE ALL BURRS AND SHARP EDGES ON FABRICATED COMPONENTS.
7. ALL OPEN ENDS OF TUBES TO BE CLOSED WITH ¼" PL SEAL WELDED.

WELDING:

1. WELD ELECTRODES AND WELD METAL USED SHALL HAVE A MINIMUM ULTIMATE TENSILE STRENGTH EQUAL TO OR HIGHER THAN THE BASE METAL.
2. ALL STRUCTURAL WELDING AND INSPECTION SHALL BE IN ACCORDANCE WITH NASA-SPEC-5004A CLASS B INSPECTION AS DESIGNATED IN THE TAIL OF THE WELD SYMBOL.
3. TOUCH UP PAINT ALL FIELD WELDING MATCH EXISTING COLOR.

MISCELLANEOUS

1. THE CONSTRUCTION SUBCONTRACTOR SHALL COORDINATE ALL CONSTRUCTION ACTIVITIES WITH ALL TRADES AND WITH THE CONTRACTING OFFICER/OWNER REPRESENTATIVE.
2. THE CONSTRUCTION SUBCONTRACTOR SHALL MAKE ARRANGEMENTS TO CLEAR ALL AREAS OF PROPOSED WORK PRIOR TO START OF DEMOLITION AND CONSTRUCTION AND VERIFY THE PRESENCE OF ALL EMBEDDED ITEMS. ELECTRICAL HAZARDS SHALL BE IDENTIFIED BY THE CONSTRUCTION SUBCONTRACTOR PRIOR TO THE START OF WORK. IF DURING CONSTRUCTION OPERATIONS, THE CONSTRUCTION SUBCONTRACTOR DISTURBS OR DAMAGES EMBEDDED CONDUITS, EQUIPMENT, ETC., HE SHALL NOTIFY THE CONTRACTING OFFICER OF THE EVENTS OF THE DAMAGE, ANY DAMAGE SHALL BE REPAIRED BY THE CONSTRUCTION SUBCONTRACTOR AT NO EXTRA COST TO THE OWNER.
3. THE CONSTRUCTION SUBCONTRACTOR SHALL REMOVE CONSTRUCTION DEBRIS ON A REGULAR BASIS AND SHALL TAKE PRECAUTIONS AS DIRECTED TO KEEP DEBRIS OFF THE BUILDINGS, PAVEMENT, PARKING AREAS, GRASS, AND WALKS.
4. IF DURING CONSTRUCTION IT IS FOUND THAT SOME ELEMENTS ARE DETERIORATED OR DAMAGED AND THEIR REPAIR WOULD REQUIRE SPECIAL DETAILING, CONSTRUCTION SUBCONTRACTOR SHALL NOTIFY THE CONTRACTING OFFICER IMMEDIATELY.

PRECAST/PRESTRESSED CONCRETE ROOF PANELS:

1. ALL CONCRETE PANELS SHALL BE PRECAST, PRESTRESSED PANELS AND SHALL CONFORM TO ACI-318 LATEST REVISION. EMBEDDED PLATES SHALL BE CAPABLE OF RESISTING A LOAD OF 2 PSI IN EITHER DIRECTION.
2. PANEL SHALL BE 6 INCH THICK HOLLOW CORE x 4'-0" WIDE. WIDTH MAY VARY DEPENDING ON FIELD CONDITIONS.
3. ALL EXPOSED HOLLOW CORE CONCRETE PANEL ENDS SHALL BE END CAPPED WITH 4" MINIMUM CONCRETE.
4. ALL STRANDS SHALL BE ¼" TO ½" DIAMETER ASTM 416 GRADE 250K OR 270K.
5. HANDLING AND INSTALLING THE PRECAST, PRESTRESSED PANEL SHALL BE PER CONCRETE MANUFACTURER'S RECOMMENDATIONS.
6. ALL FUTURE DRILLING AND PENETRATIONS THRU PANEL AFTER PROJECT COMPLETION ARE PROHIBITED UNLESS PERMITTED BY THE RESPONSIBLE DESIGN ORGANIZATION.
7. ALL CONCRETE PANELS SHALL BE SEALED WITH SILICONE ELASTOMERIC WATERPROOF COATING AFTER ALL REPAIR, CAULK AND GROUT.
8. ALL PRECAST PRESTRESSED CONCRETE SHALL DEVELOP A MINIMUM OF 5000 PSI COMPRESSIVE STRENGTH AT 28 DAYS.

VENDORS:

PERMACAST PRECAST CONCRETE
6015 21st Street East
Bradenton, FL 34203
PH: 888-977-9255
WEB: WWW.PERMACATWALLS.COM

DURA-STRESS INC.
11325 County Road 44
Leesburg , FL , 34788
PH: 352-787-1422
WEB: WWW.DURASTRESS.COM

GROUT:

1. GROUT TO BE COMMERCIAL GRADE NON-SHRINK 5000 PSI MIN.

CAULK:

1. CAULK TO BE COMMERCIAL GRADE NON-SHRINK POLYURETHANE OR 790 SILICONE.

SYM	ZONE	DESCRIPTION	DATE	APPROVED
REVISIONS				

JACOBS
Jacobs Technology Inc.

SIGNATURES		DATE
DRAWN	GEORGE LE	3/07/14
CHECKED	JASON BROOKS	3/07/14
SUBMITTED	DAVID CAMPBELL	3/07/14
ST OF LICENSURE: MI LICENSE NO: 6201050226		
APPROVED	GLEN WARD	3/07/14
	S. HUNT	3/07/14

NATIONAL AERONAUTICS AND SPACE ADMINISTRATION
JOHN F. KENNEDY SPACE CENTER, NASA
KENNEDY SPACE CENTER, FLORIDA

KSC LAUNCH PAD 39-B
ENVIRONMENTAL CONTROL SYSTEM (ECS) REFURBISHMENT
ECS SYSTEM
STUB TOWER MODIFICATION
STRUCTURAL GENERAL NOTES

FILE NO.	SIZE	DWG.NO.	REV
	F	79K39602	
PCN. NO. 98898		SHEET 77 OF 187	

S-001

P:\95452\DRAWINGS\CONFIG\P95452P.DWT
13-DEC-2012 10:10
MDULEMAP

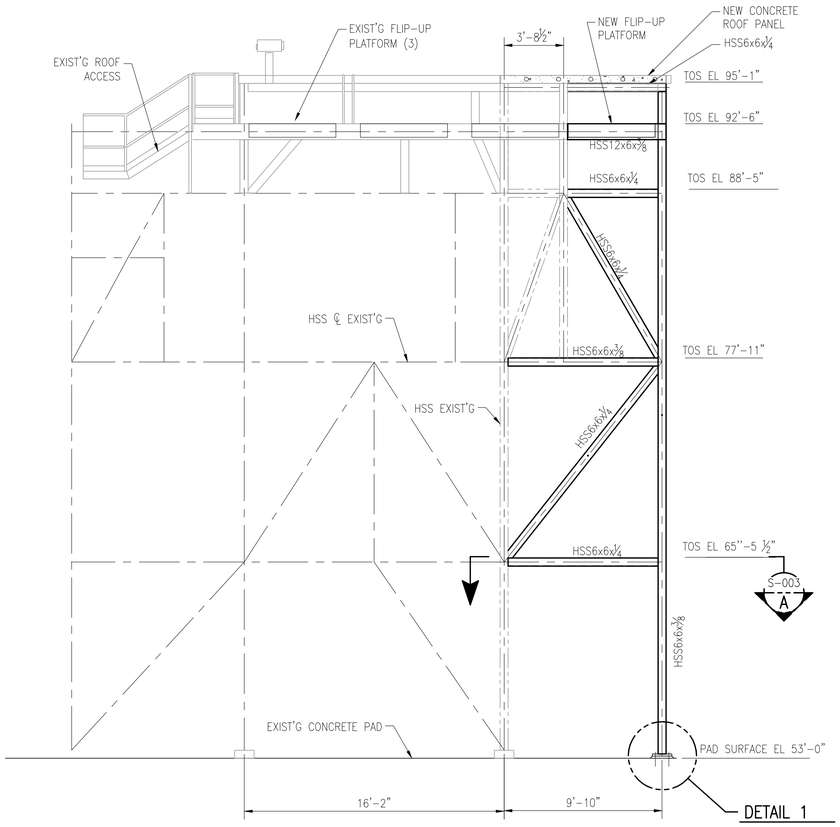

EAST ELEVATION
SCALE: 1/4"=1'-0"

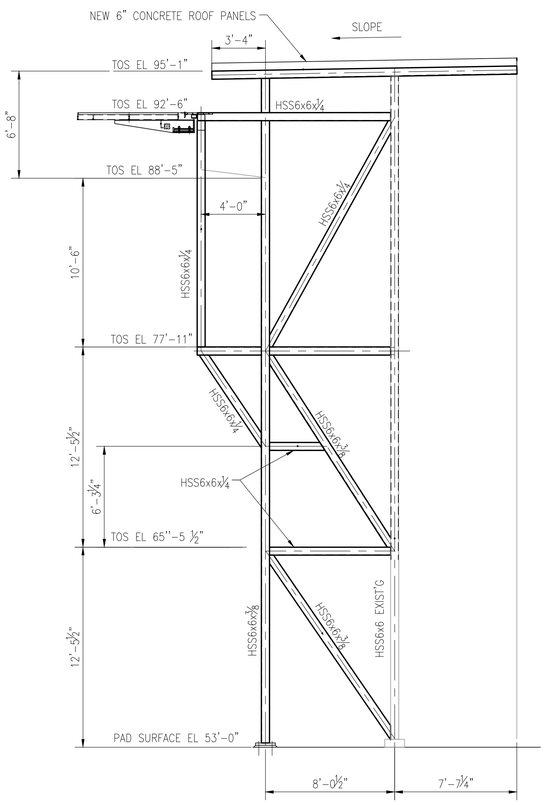

NORTH ELEVATION
SCALE: 1/4"=1'-0"

NOTE:

1. SEE DWG S-001 FOR GENERAL NOTES.

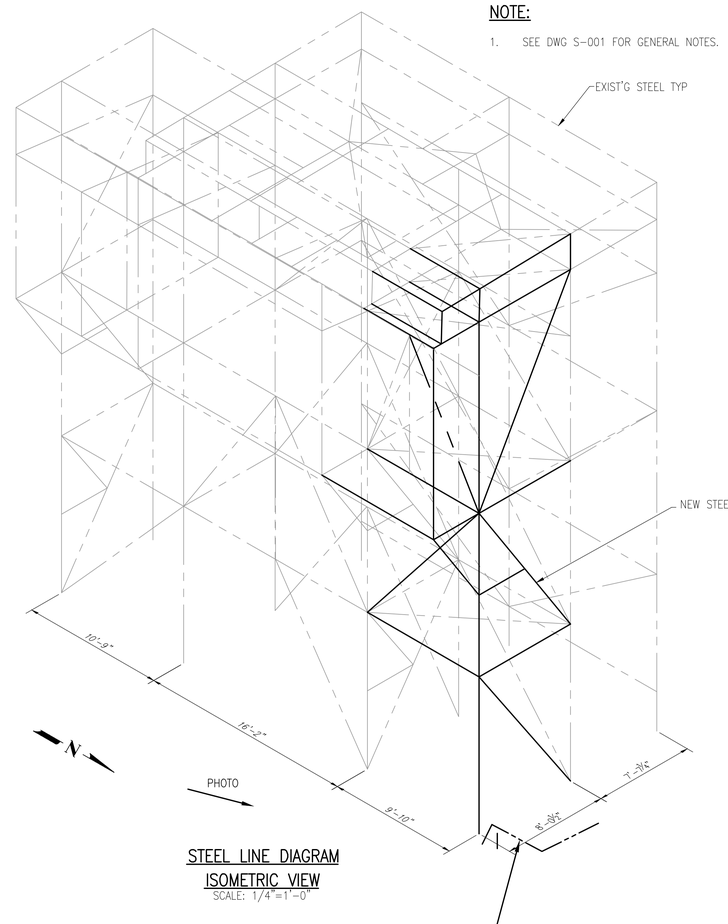

STEEL LINE DIAGRAM
ISOMETRIC VIEW
SCALE: 1/4"=1'-0"

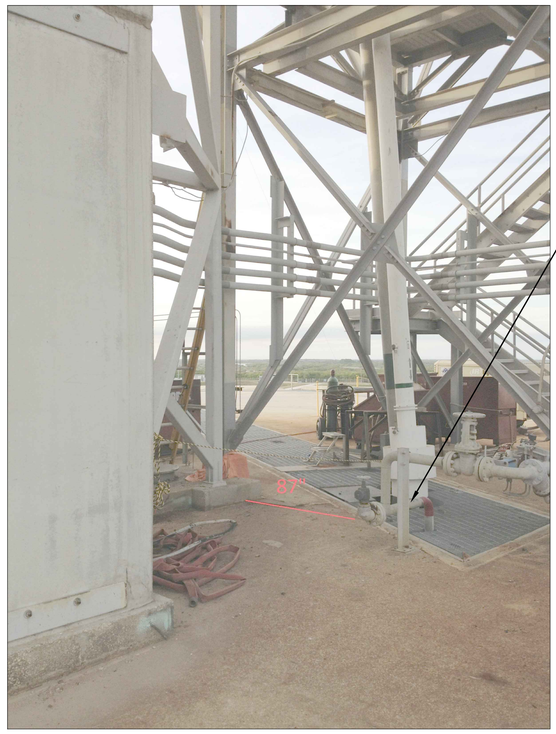

EXISTING PIPE STAND RELOCATED IF IN WAY OF NEW HSS6x6 COLUMN

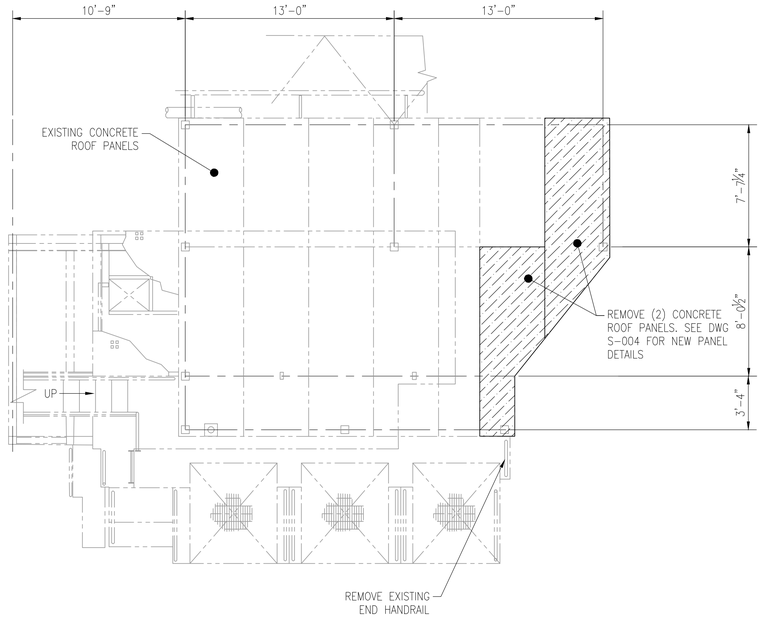

N

ROOF PLAN
SCALE: 1/4"=1'-0"
EXIST'G

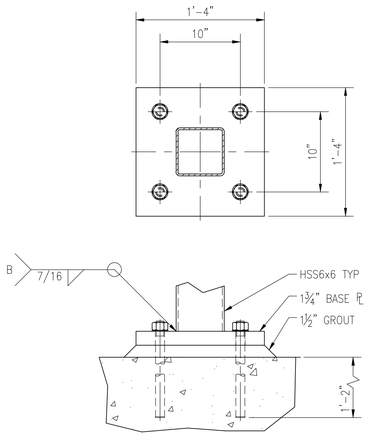

DETAIL 1
SCALE: 1 1/2"=1'-0"

FASTEN WITH 4-1"ø THREADED RODS ASTM 193 GR B7 14" EMBEDMENT USE CHEMICAL ANCHOR SYSTEM

SYM	ZONE	DESCRIPTION	DATE	APPROVED
REVISIONS				

JACOBS
Jacobs Technology Inc.

SIGNATURES	DATE
DRAWN GEORGE LE	3/07/14
CHECKED JASON BROOKS	3/07/14
SUBMITTED DAVID CAMPBELL	3/07/14
ST OF LICENSURE: MI LICENSE NO: 6201050226	
APPROVED GLEN WARD	3/07/14
S. HUNT	3/07/14

NATIONAL AERONAUTICS AND SPACE ADMINISTRATION
JOHN F. KENNEDY SPACE CENTER, NASA
KENNEDY SPACE CENTER, FLORIDA

KSC LAUNCH PAD 39-B
ENVIRONMENTAL CONTROL SYSTEM (ECS) REFURBISHMENT
ECS SYSTEM
STUB TOWER MODIFICATION
ELEVATION VIEWS

FILE NO.	SIZE	DWG.NO.	REV
	F	79K39602	
PCN. NO. 98898		SHEET 78 OF 187	

S-002

P:\95452\DRAWINGS\CONFIG\P95452P.DWT
13-DEC-2012 10:10
MEULEMAF

NOTES:

1. SEE DWG S-001 FOR GENERAL NOTES.
2. REMOVE EXISTING PATCH TO EXPOSE STRUCTURAL CONNECTION. ADD NEW STEEL TO EXISTING WORK POINT. WRAP ENDS OF NEW STEEL WITH ¼" FOAM SEAL. REPLACE PATCH TO NEW CONNECTION. CAULK AND SEAL PATCH USING ½" MIN BEAD.
3. USE CAUTION TO NOT CUT PANEL STEEL STRANDS WHEN REMOVING EXISTING PATCH.

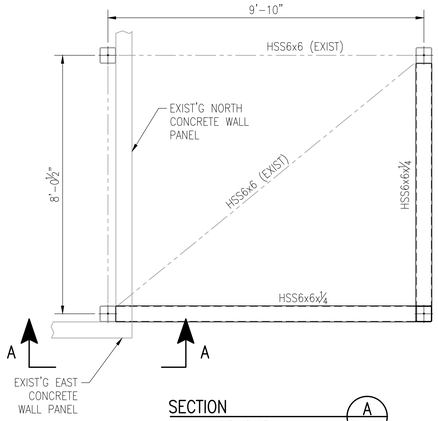

SECTION A
SCALE: 1/2"=1'-0" S-002
PLAN EL 65'-5 1/2" AND EL 77'-11"

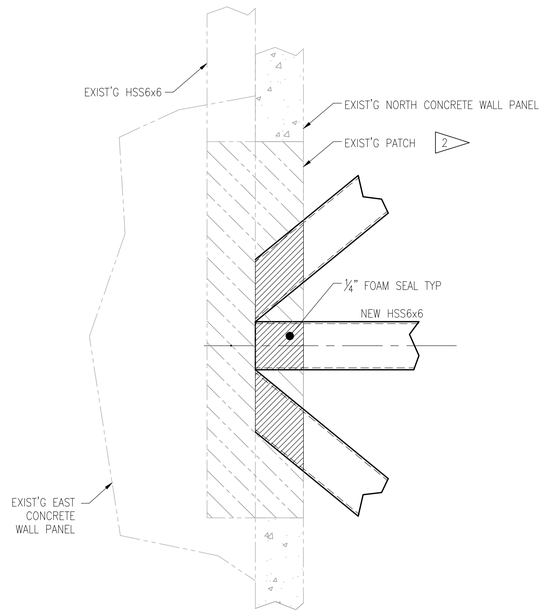

SECTION A-A
SCALE: 1 1/2"=1'-0"
SEE TYPICAL WELD DETAIL

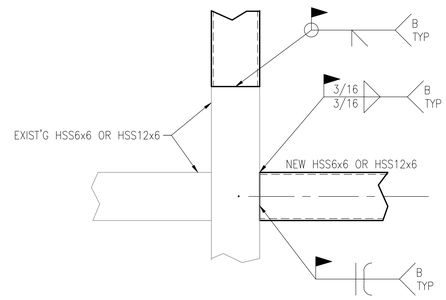

TYPICAL SPLICE DETAIL
SCALE: 1 1/2"=1'-0"

SYM	ZONE	DESCRIPTION	DATE	APPROVED
REVISIONS				

JACOBS
Jacobs Technology Inc.

SIGNATURES		DATE
DRAWN	GEORGE LE	3/07/14
CHECKED	JASON BROOKS	3/07/14
SUBMITTED	DAVID CAMPBELL	3/07/14
ST OF LICENSURE: MI LICENSE NO: 6201050226		
APPROVED	GLEN WARD	3/07/14
	S. HUNT	3/07/14

NATIONAL AERONAUTICS AND SPACE ADMINISTRATION
JOHN F. KENNEDY SPACE CENTER, NASA
KENNEDY SPACE CENTER, FLORIDA

KSC LAUNCH PAD 39-B
ENVIRONMENTAL CONTROL SYSTEM (ECS) REFURBISHMENT
ECS SYSTEM
STUB TOWER MODIFICATION
SECTION AND DETAILS

FILE NO.	SIZE	DWG.NO.	REV
	F	79K39602	
PCN. NO. 98898		SHEET 79 OF 187	

S-003

P:\95452\DRAWINGS\STRUS-003.DWG 07-FEB-2014 08:08 RHEAJE

NOTE:

1. SEE DWG S-001 FOR GENERAL NOTES.

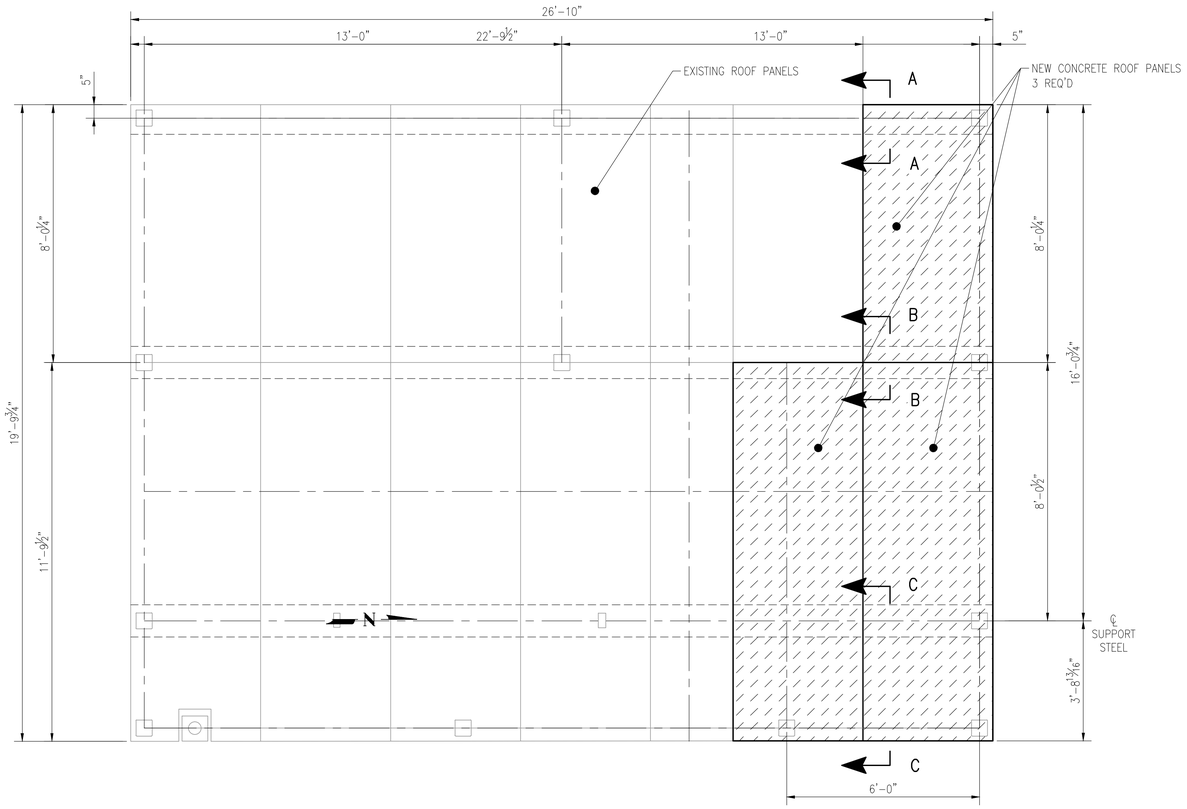

NEW ROOF PLAN – EL 95'-1"
SCALE: 1/2"=1'-0"

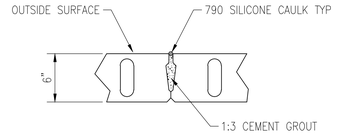

STANDARD TONGUE AND GROOVE CONCRETE PANEL JOINT DETAIL
SCALE: NONE

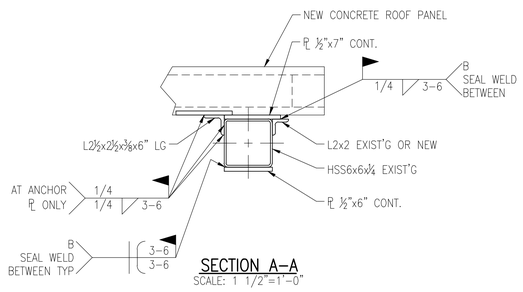

SECTION A-A
SCALE: 1 1/2"=1'-0"

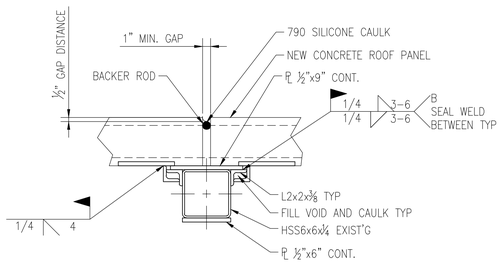

SECTION B-B
SCALE: 1 1/2"=1'-0"

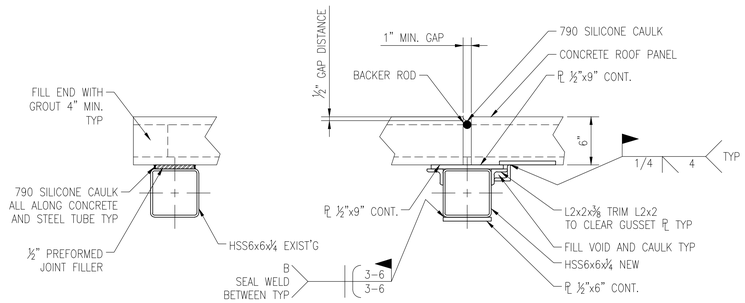

SECTION C-C
SCALE: 1 1/2"=1'-0"

SYM	ZONE	DESCRIPTION	DATE	APPROVED
		REVISIONS		

JACOBS
Jacobs Technology Inc.

SIGNATURES		DATE
DRAWN	GEORGE LE	3/07/14
CHECKED	JASON BROOKS	3/07/14
SUBMITTED	DAVID CAMPBELL	3/07/14
ST OF LICENSURE: MI LICENSE NO: 6201050226		
APPROVED	GLEN WARD	3/07/14
	S. HUNT	3/07/14

NATIONAL AERONAUTICS AND SPACE ADMINISTRATION
JOHN F. KENNEDY SPACE CENTER, NASA
KENNEDY SPACE CENTER, FLORIDA

KSC LAUNCH PAD 39-B
ENVIRONMENTAL CONTROL SYSTEM (ECS) REFURBISHMENT
ECS SYSTEM
STUB TOWER MODIFICATION
ROOF PLAN EL 95'-1"

FILE NO.	SIZE	DWG.NO.	REV
	F	79K39602	
PCN. NO. 98898		SHEET 80 OF 187	

S-004

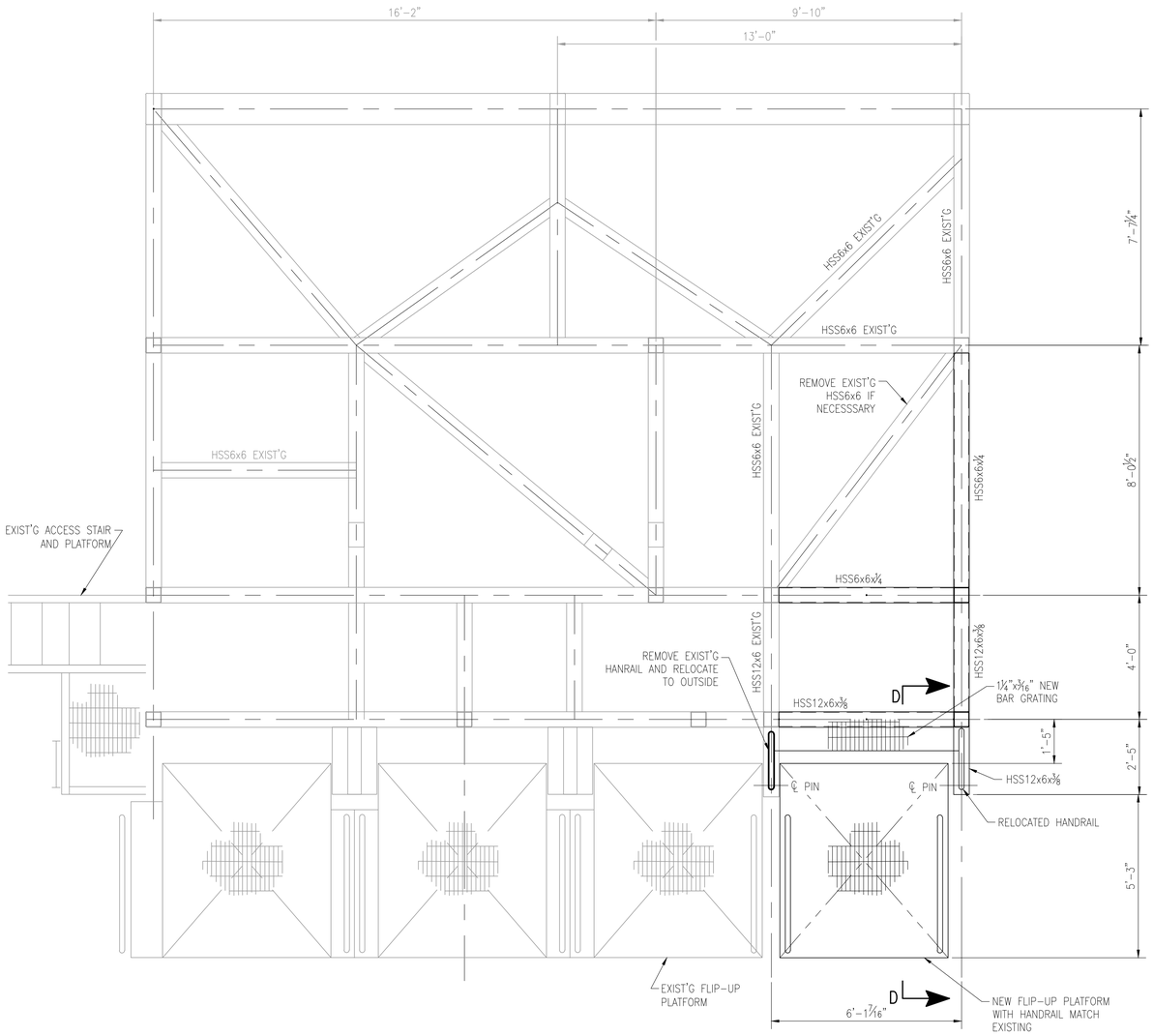

EL 92'-6" PLAN
SCALE: 1/2"=1'-0"

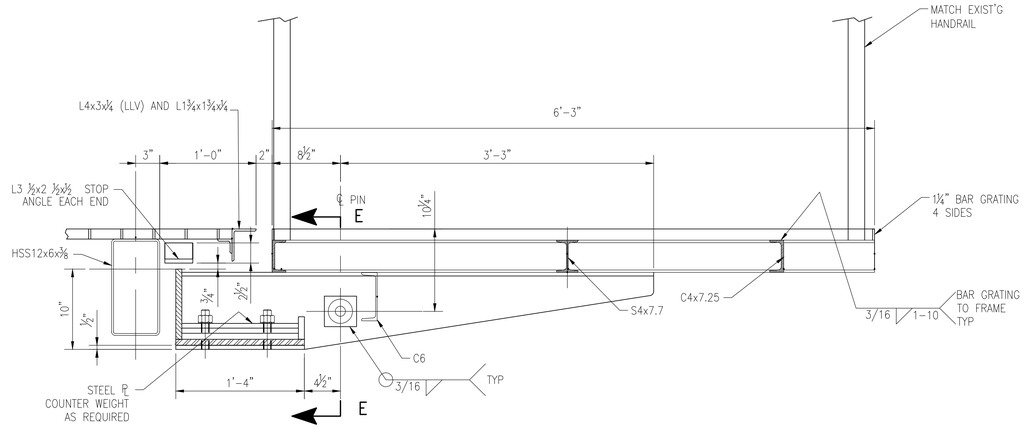

SECTION D-D EL 95'-0"
SCALE: 1 1/2"=1'-0"

2 FLIP-UP PLATFORM 1 REQUIRED MATCH EXISTING PLATFORM

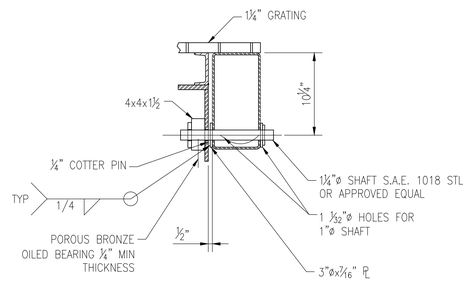

SECTION E-E
SCALE: 1 1/2"=1'-0"

NOTES:

1. SEE DWG S-00 FOR GENERAL NOTES.
2. AFTER PLATFORM IS INSTALLED, PERFORM PLATFORM FUNCTION TEST AT LEAST 3 FULL OPERATING CYCLES. MAKE NECESSARY ADJUSTMENTS AS REQUIRED FOR SMOOTH SATISFACTORY OPERATION AS APPROVED BY CONTACTING OFFICER.

SYM	ZONE	DESCRIPTION	DATE	APPROVED
		REVISIONS		

JACOBS™
Jacobs Technology Inc.

SIGNATURES		DATE
DRAWN	GEORGE LE	3/07/14
CHECKED	JASON BROOKS	3/07/14
SUBMITTED	DAVID CAMPBELL	3/07/14
ST OF LICENSURE: MI LICENSE NO: 6201050226		
APPROVED	GLEN WARD	3/07/14
	S. HUNT	3/07/14

NATIONAL AERONAUTICS AND SPACE ADMINISTRATION
JOHN F. KENNEDY SPACE CENTER, NASA
KENNEDY SPACE CENTER, FLORIDA

KSC LAUNCH PAD 39-B
ENVIRONMENTAL CONTROL SYSTEM (ECS) REFURBISHMENT
ECS SYSTEM
STUB TOWER MODIFICATION
PLAN EL 92'-6"

FILE NO.	SIZE	DWG.NO.	REV
	F	79K39602	

PCN. NO. 98898 SHEET 81 OF 187

S-005

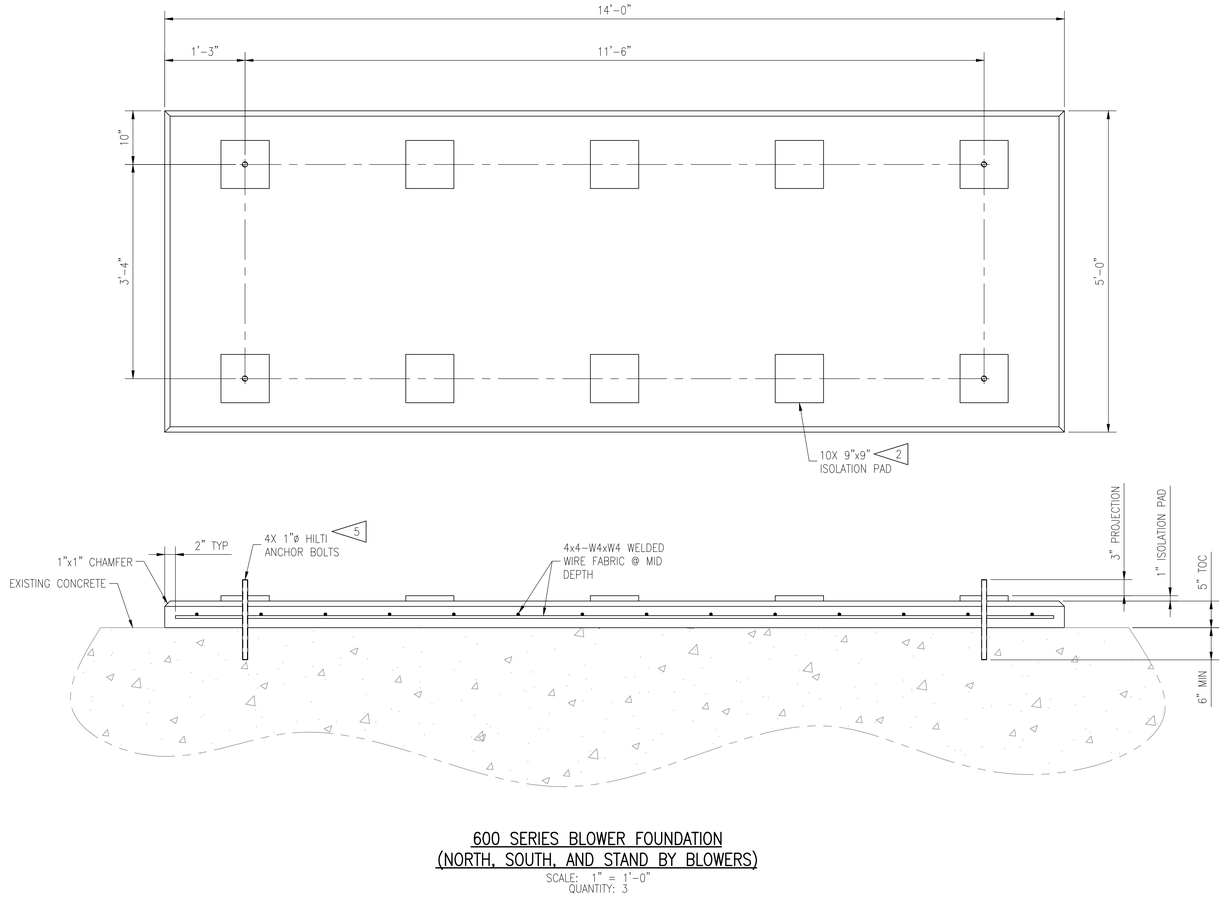

600 SERIES BLOWER FOUNDATION
(NORTH, SOUTH, AND STAND BY BLOWERS)
SCALE: 1" = 1'-0"
QUANTITY: 3

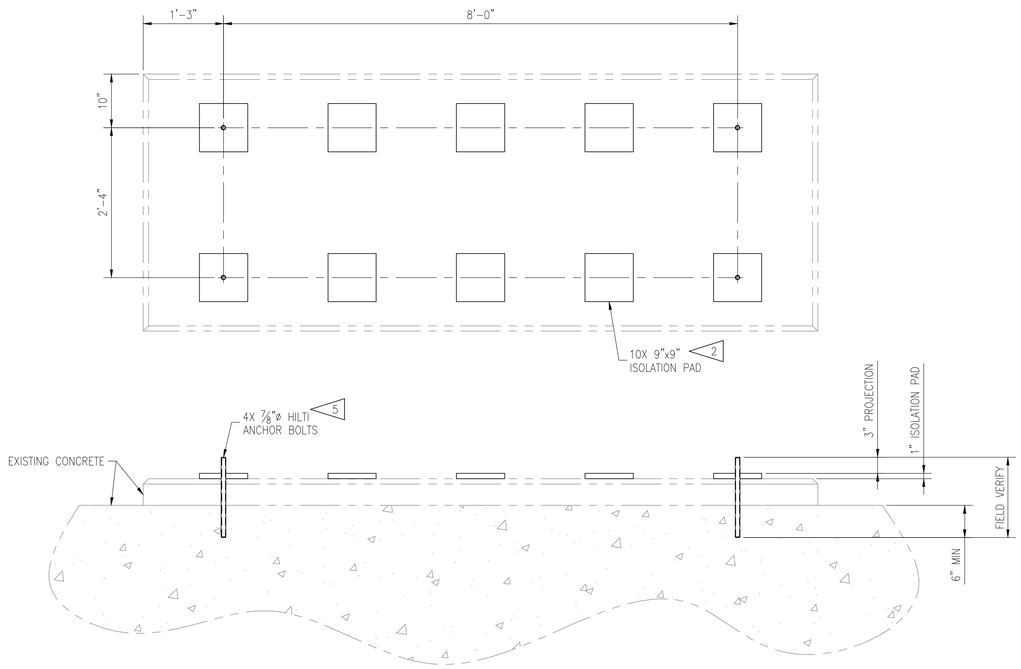

151 SERIES BLOWER FOUNDATION
(ICPS BLOWERS)
SCALE: 1" = 1'-0"
QUANTITY: 2

GENERAL NOTES:

1. SEE DRAWING S-001 FOR ADDITIONAL NOTES.
2. ISOLATION PADS TO BE PROVIDED BY THE BLOWER MANUFACTURER AND INSTALLED PER THE MANUFACTURES SPECIFICATIONS.

CONCRETE NOTES:

3. CONSTRUCTION OF REINFORCED CONCRETE SHALL BE IN ACCORDANCE WITH ACI 318-08.
4. ALL CAST-IN-PLACE CONCRETE SHALL BE f'c = 4000 psi AND BE AIR ENTRAINED UNLESS NOTED OTHERWISE.
5. WHERE ADHESIVE ANCHORS ARE CALLED OUT ON THE DRAWING, HILTI HIT-RE 500-SD + HAS INJECTION ADHESIVE ANCHORING SYSTEM IS USED AS THE REFERENCE STANDARD. ANCHOR RODS SHALL BE HILTI HAS B7 THREADED RODS OR APPROVED EQUAL.
6. ADHESIVE ANCHORS SHALL BE INSTALLED IN ACCORDANCE WITH MANUFACTURER'S RECOMMENDATION.
7. ALL EXPOSED EDGES OF NEW CONCRETE SHALL BE CHAMFERED TO MATCH EXISTING UNLESS OTHERWISE NOTED.
8. ALL REINFORCEMENT SHALL BE ASTM A185.
9. ALL DIMENSIONS TO REINFORCING STEEL ON THE CONTRACT DRAWINGS ARE TO THE CENTERLINE OF THE BAR EXCEPT WHERE CLEAR DISTANCE IS NOTED FROM THE FACE OF THE CONCRETE.
10. PLACE REINFORCEMENT AND PROVIDE SUPPORTS FOR REINFORCING STEEL IN ACCORDANCE WITH THE "MANUAL OF STANDARD PRACTICE" OF THE CONCRETE REINFORCING STEEL INSTITUTE (CRSI) MSP-1.
11. ALL REINFORCING STEEL AND EMBEDMENTS SHALL BE HELD SECURELY IN PLACE PRIOR TO PLACING CONCRETE. PROVIDE SUFFICIENT SUPPORTS TO ALLOW WALKING ON REINFORCEMENT. NO BRICK OR POROUS MATERIAL SHALL BE USED TO SUPPORT REINFORCING.

SYM	ZONE	DESCRIPTION	DATE	APPROVED
REVISIONS				

JACOBS
Jacobs Technology Inc.

SIGNATURES		DATE
DRAWN	GEORGE LE	3/07/14
CHECKED	JASON BROOKS	3/07/14
SUBMITTED	DAVID CAMPBELL	3/07/14
ST OF LICENSURE: MI LICENSE NO: 6201050226		
APPROVED	GLEN WARD	3/07/14
	S. HUNT	3/07/14

NATIONAL AERONAUTICS AND SPACE ADMINISTRATION
JOHN F. KENNEDY SPACE CENTER, NASA
KENNEDY SPACE CENTER, FLORIDA

KSC LAUNCH PAD 39-B
ENVIRONMENTAL CONTROL SYSTEM (ECS) REFURBISHMENT
ECS SYSTEM
BLOWER FOUNDATION
DETAILS

FILE NO.	SIZE	DWG.NO.	REV
	F	79K39602	
PCN. NO. 98898		SHEET 82 OF 187	

S-006

NOTES:

1. SEE DWG S-001 FOR GENERAL NOTES.
2. FILL INTERNAL CAVITY WITH SPRAY FOAM INSULATION THROUGH ø1" HOLE IN THE CENTER OF INTERIOR WALL PLATE. PLUG HOLE USING A ø1" BOLT FOLLOWING THE APPLICATION OF THE INSULATION.
3. SEE DWG M-004 FOR LOCATION AND ASSOCIATED DEMOLITION WORK.

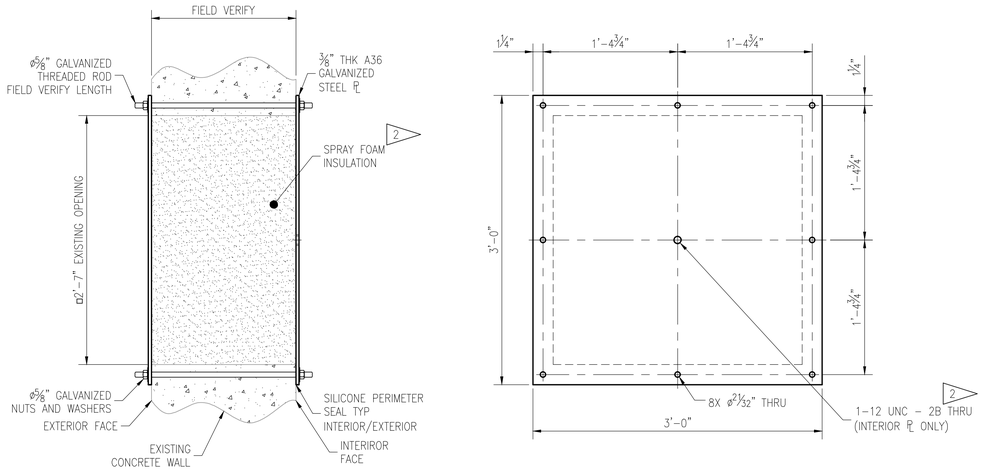

WALL PENETRATION PATCH DETAIL
SCALE: 1-1/2" = 1'-0"

SYM	ZONE	DESCRIPTION	DATE	APPROVED
REVISIONS				

JACOBS
Jacobs Technology Inc.

SIGNATURES		DATE
DRAWN	GEORGE LE	3/07/14
CHECKED	JASON BROOKS	3/07/14
SUBMITTED	DAVID CAMPBELL	3/07/14
ST OF LICENSURE: MI LICENSE NO: 6201050226		
APPROVED	GLEN WARD	3/07/14
	S. HUNT	3/07/14

NATIONAL AERONAUTICS AND SPACE ADMINISTRATION
JOHN F. KENNEDY SPACE CENTER, NASA
KENNEDY SPACE CENTER, FLORIDA

KSC LAUNCH PAD 39-B
ENVIRONMENTAL CONTROL SYSTEM (ECS) REFURBISHMENT
ECS SYSTEM
ECS ROOM
WALL PENETRATION PATCH

FILE NO.	SIZE	DWG.NO.	REV
	F	79K39602	
PCN. NO.		SHEET 83 OF 187	

S-007

P:\39452\DRAWINGS\STRUCS-003.DWG
07-FEB-2014 08:08
RHEALE

SINGLE LINE SYMBOLS

AC CONTACTS

100A / 40A — MOLDED CASE CIRCUIT BREAKER, 100 AMP FRAME 40 AMP TRIP

400 / 400 — CIRCUIT BREAKER, DRAW-OUT TYPE 400 AMP FRAME SET AT 400 AMPS

(E) 400 / 400 — ELECTRICALLY OPERATED CIRCUIT BREAKER, DRAW-OUT TYPE 400 AMP FRAME SET AT 400 AMPS

DISCONNECT SWITCH

OVERLOAD SENSOR

FUSED DISCONNECT

XXX — MOTOR AC
XXX = HP

HEATER

RVSS — REDUCED VOLTAGE SOFT STARTER

SCR — HEATER CONTROLLER

VFD — VARIBLE FREQUENCY DRIVE

GROUNDING SYMBOLS

EXOTHERMIC CONNECTION

GROUND

GROUNDING ROD WITH WELDED CONNECTION

GROUNDING ROD WITH BOLTED CONNECTION

AIR TERMINAL

RACEWAY SYMBOLS

CONDUIT EXPOSED (NEW)

CONDUIT CONCEALED, OR AS SHOWN BELOW PLATFORMS AND RAISED FLOORING

FIELD DEVICES

DISCONNECT SWITCH, NON-FUSED

DISCONNECT SWITCH, FUSED

REDUCED VOLTAGE STARTER

COMBINATION STARTER (WITH DISCONNECT)

COMBINATION STARTER WITH CIRCUIT BREAKER

VFD — VARIABLE FREQUENCY DRIVE

HTR — HEATER

WIRES (L-R)
2 HOT, 1 NEUTRAL,
1 GROUND)

RP1-1, 3 — HOME RUN TO RP-1 CIRCUITS 1 AND 3

LP — HOME RUN TO LIGHTING PANEL

120V RECEPTACLE

120V DUPLEX RECEPTACLE

480V, 3 PHASE WELDING RECEPTACLE

LIGHTING SYMBOLS

A1a — LIGHT FIXTURE, WALL MOUNT
A=FIXTURE TYPE, 1=CIRCUIT,
a=SWITCH IDENTIFICATION

A1a — LIGHT FIXTURE, POLE MOUNT
A=FIXTURE TYPE, 1=CIRCUIT,
a=SWITCH IDENTIFICATION

A1a — HID LIGHT FIXTURE
A=FIXTURE TYPE, 1=CIRCUIT,
a=SWITCH IDENTIFICATION

G — PUSH TO TEST, PILOT LIGHT, GREEN

FLUORESCENT LIGHT FIXTURE, INDOOR SURFACE MOUNTED

FLUORESCENT LIGHT FIXTURE, OUTDOOR SURFACE MOUNTED

WIRING DIAGRAM SYMBOLS

CONTACT NORMALLY OPENED

CONTACT NORMALLY CLOSED

CONTACTOR OR RELAY COIL

LEVEL SWITCH,
N.C. OPENS ON RISING LEVEL

LEVEL SWITCH,
N.O. CLOSES ON RISING LEVEL

LEVEL SWITCH,
N.C. OPENS ON FALLING LEVEL

LEVEL SWITCH,
N.O. CLOSES ON FALLING LEVEL

E-STOP PUSHBUTTON

POSITION SWITCH, NORMALLY CLOSED

POSITION SWITCH, NORMALLY OPEN

SOLENOID

TEMPERATURE ELEMENT

M — MOTOR OR GENERATOR, 3 PHASE

OFF / HAND / AUTO — SELECTOR SWITCH, NORMALLY CLOSED

START — PUSHBUTTON SWITCH, NORMALLY OPEN

120V DUPLEX RECEPTACLE

NOTES:

1. ALL WORK SHALL BE PERFORMED IN ACCORDANCE WITH THE LATEST EDITION OF THE NATIONAL ELECTRIC CODE, NFPA 70 AND THE NATIONAL ELECTRIC SAFETY CODE, C2.
2. ROUTE CONDUIT PERPENDICULAR OR PARALLEL TO BUILDING WALLS. ROUTE OVERHEAD IN A MANNER TO AVOID INTERFERENCE WITH MECHANICAL EQUIPMENT INSTALLATIONS. GROUP CONDUIT TOGETHER IN COMMON RUNS WHERE POSSIBLE. SUPPORT CONDUIT FROM BUILDING WALLS, COLUMNS, AND CLAMPS AS SPECIFIED IN THE CONTRACT DOCUMENTS.
3. ALL POWER FEEDERS AND BRANCH CIRCUITS SHALL CONTAIN AN EQUIPMENT GROUNDING CONDUCTOR. THE CONDUCTOR SHALL BE ROUTED IN THE SAME CONDUIT OR CABLE TRAY AS THE CIRCUIT CONDUCTORS.
4. CONTRACTOR SHALL ASSUME THE WORD PROVIDE MEANS PROVIDE AND INSTALL, AND THE WORD INSTALL SHALL ALSO MEAN PROVIDE AND INSTALL.
5. CONDUIT SIZES FOR POWER WIRING ARE BASED ON TYPE THHN WIRE. IF OTHER WIRE TYPES ARE USED, AS ALLOWED IN THE SPECIFICATIONS, CONDUIT SIZES AND FILLS SHALL BE ADJUSTED TO COMPLY WITH NFPA 70.
6. ALL SYMBOLS SHOWN ON THIS SHEET MAY OR MAY NOT BE USED IN THIS DRAWING PACKAGE.
7. CONTRACTOR RESPONSIBLE FOR MAKING PENETRATIONS. IF SPARE PENETRATIONS ARE AVAILABLE, CONTRACTOR MAY USE THESE. CONTRACTOR RESPONSIBLE FOR SEALING AROUND ALL PENETRATIONS USED DURING CONSTRUCTION.
8. ALL CONDUIT SHOWN DIAGRAMMATICALLY. CONTRACTOR RESPONSIBLE FOR FIELD ROUTING CONDUIT.
9. CONTRACTOR SHALL ASSUME ALL EXISTING CONDUCTORS CONTAIN HAZARDOUS MATERIALS SUCH AS ASBESTOS AND PCBS. CONTRACTOR IS RESPONSIBLE FOR HAZARDOUS TESTING OF A REPRESENTATIVE SAMPLE TO DETERMINE PROPER METHODS OF DISPOSAL.
10. EXISTING CONDUIT BONDING TO EQUIPMENT GROUND BUS OR CABLE TRAY SHALL REMAIN, ANY MODIFIED CONDUIT SHALL HAVE BONDING REAPPLIED.
11. NEW CONDUIT SUPPLYING CONDUCTORS TO CABLE TRAY SHALL BE BONDED TO THE CABLE TRAY USING A GROUNDING BUSHING. ALL CONDUIT SHALL BE BONDED TO THE EQUIPMENT GROUND AT THE EQUIPMENT WITH A GROUNDING BUSHING.
12. ELECTRICAL WORK ASSOCIATED WITH SPARE HEATER CIRCUITS SHALL BE BID AS FIXED PRICE OPTION 1 (FPO-1). THIS WORK SHALL NOT BE PERFORMED IF OPTION IS NOT EXERCISED. SEE BID OPTIONS TABLE ON SHEET M-002.

ABBREVIATIONS

AFF	ABOVE FINISHED FLOOR
ASD	ADJUSTABLE SPEED DRIVE
ATS	AUTOMATIC TRANSFER SWITCH
BHDC	BARE HARD-DRAWN COPPER
BPC	BY-PASS CONTACTOR
BSDC	BARE SOFT-DRAWN COPPER
DWG	DRAWING
ECS	ENVIRONMENTAL CONTROL SYSTEM
EOLR	END-OF-LINE RESISTOR
FA	FORCED AIR
FCS	FACILITY CONTROL SYSTEM
FVNR	FULL VOLTAGE NON-REVERSING
HMI	HUMAN MACHINE INTERFACE
KAIC	KILO-AMPS INTERRUPTING CAPACITY
LED	LIGHT EMITTING DIODE
MC	MAIN CONTACTOR
MCC	MOTOR CONTROL CENTER
MCB	MAIN CIRCUIT BREAKER
MH	METAL HALIDE
OA	OPEN AIR
PTSI	PAIR TWISTED SHIELDED INSULATED
PW	PROTECTOWIRE
RVNR	REDUCED VOLTAGE NON-REVERSING
RVSS	REDUCED VOLTAGE SOFT STARTER
SCR	SILICON CONTROLLED RECTIFIER
SD	SMOKE DETECTOR
SS	SOLID STATE
SWGR	SWITCHGEAR
TB	TERMINAL BLOCK
UG	UNDERGROUND
UV	ULTRAVIOLET
U.N.O.	UNLESS NOTED OTHERWISE
VFD	VARIABLE FREQUENCY DRIVE
WLA	WARNING LIGHT ASSEMBLY

SYM	ZONE	DESCRIPTION	DATE	APPROVED
REVISIONS				

JACOBS
Jacobs Technology Inc.

SIGNATURES		DATE
DRAWN	MARTIN HENNIGH	3/07/14
CHECKED	JERRY HUNT	3/07/14
SUBMITTED	BRIAN GARLAND	3/07/14
ST OF LICENSURE: TN LICENSE NO: 00113330		
APPROVED	GLEN WARD	3/07/14
	DUNG TRANG	3/07/14

NATIONAL AERONAUTICS AND SPACE ADMINISTRATION
JOHN F. KENNEDY SPACE CENTER, NASA
KENNEDY SPACE CENTER, FLORIDA

KSC LAUNCH PAD 39-B
ENVIRONMENTAL CONTROL SYSTEM (ECS) REFURBISHMENT
ELECTRICAL SYMBOLS,
NOTES & ABBREVIATIONS

FILE NO.	SIZE	DWG.NO.	REV
	F	79K39602	

PCN. NO. 98898 | SHEET 55 OF 187

E-001

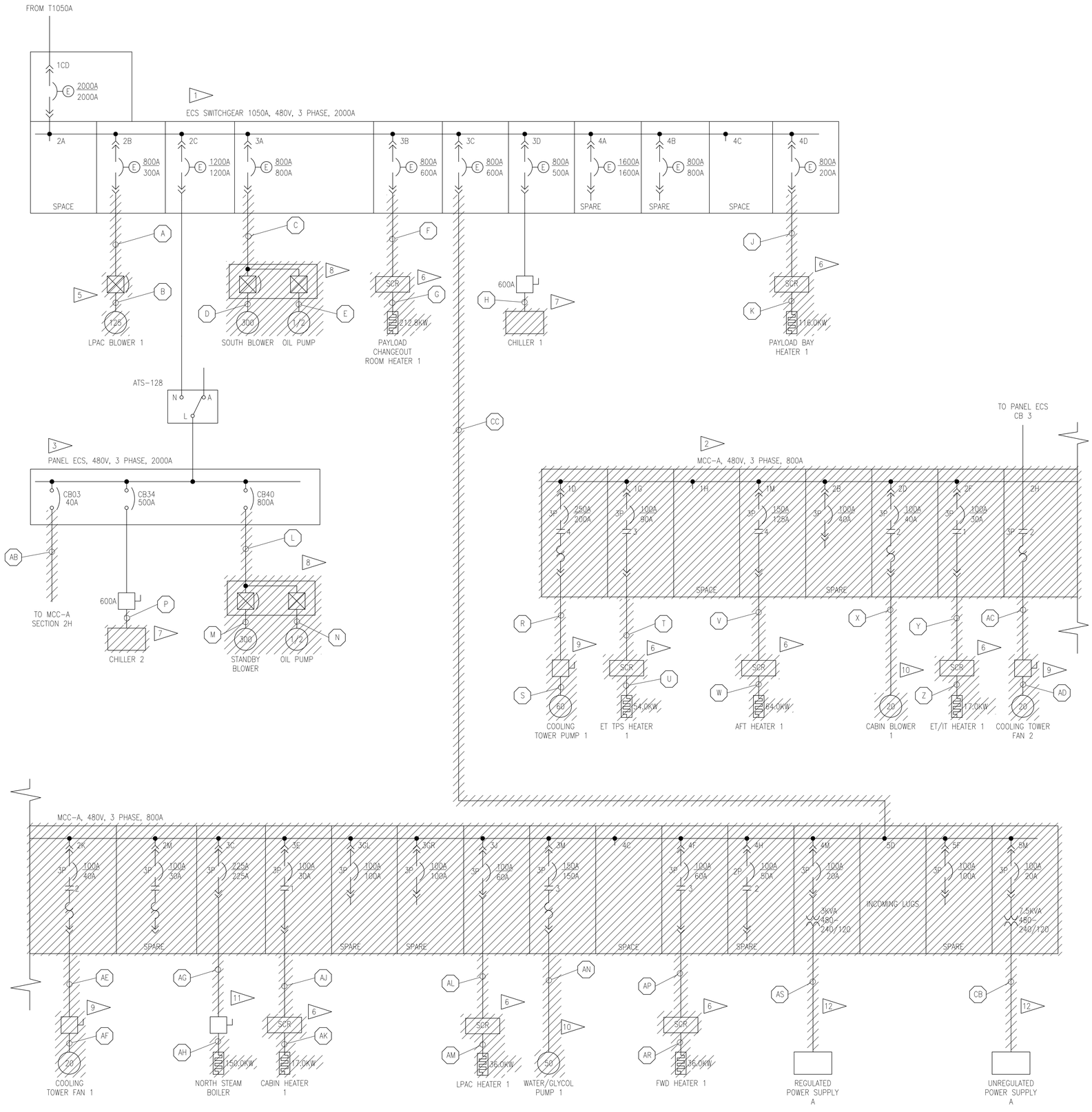

NOTES:

1. ECS SWITCHGEAR 1050A IS AN EXISTING EATON CUTLER HAMMER MAGNUM DS SWITCHGEAR. THIS SWITCHGEAR IS EQUIPPED WITH A BREAKER LIFTING DEVICE MOUNTED ON RAILS ON TOP OF THE SWITCHGEAR.
2. ECS MCC-A IS AN EXISTING EATON CUTLER HAMMER FREEDOM 2100 MCC. REMOVE EXISTING MCC. CONTRACTOR CAN RESERVE UNITS FOR INSTALLATION OR PROVIDE ALL NEW. CONTRACTOR RESPONSIBLE FOR DISPOSAL OF ANY UNUSED UNITS.
3. PANEL ECS IS AN EXISTING PANELBOARD.
4. DEMOLITION DOES NOT INCLUDE REMOVAL OF ECS SWTICHGEAR OR PANELBOARD.
5. REMOVE AND DISPOSE OF CONDUCTOR, MOTOR STARTER, AND MOTOR. CONDUIT AND CABLE TRAY TO REMAIN FOR REUSE DURING INSTALLATION.
6. REMOVE AND DISPOSE OF CONDUCTOR, CONDUIT, HEATER CONTROLLER, HEATER CONTROLLER ENCLOSURE, AND HEATER. CABLE TRAY TO REMAIN FOR REUSE DURING INSTALLATION.
7. REMOVE AND DISPOSE OF CHILLER AND CONDUCTOR FROM DISCONNECT SWITCH TO CHILLER. DISCONNECT SWITCH AND CONDUIT TO REMAIN FOR REUSE DURING INSTALLATION.
8. REMOVE AND DISPOSE OF CONDUCTOR, CONDUIT, MOTOR STARTER, AND MOTOR. CABLE TRAY TO REMAIN FOR REUSE DURING INSTALLATION.
9. REMOVE AND DISPOSE OF CONDUCTOR, CONDUIT, DISCONNECT SWITCH, AND MOTOR.
10. REMOVE AND DISPOSE OF CONDUCTOR, CONDUIT, AND MOTOR.
11. REMOVE AND DISPOSE OF CONDUCTOR, CONDUIT AND BOILER. DISCONNECT SWITCH SHALL REMAIN FOR REUSE.
12. REMOVE AND DISPOSE OF CONDUCTOR AND CONDUIT.

LEGEND:

XX — EQUIPMENT IDENTIFIER

DEMO

SYM	ZONE	DESCRIPTION	DATE	APPROVED
		REVISIONS		

JACOBS
Jacobs Technology Inc.

SIGNATURES		DATE
DRAWN	MARTIN HENNIGH	3/07/14
CHECKED	JERRY HUNT	3/07/14
SUBMITTED	BRIAN GARLAND	3/07/14
ST OF LICENSURE: TN LICENSE NO: 00113330		
APPROVED	GLEN WARD	3/07/14
	DUNG TRANG	3/07/14

NATIONAL AERONAUTICS AND SPACE ADMINISTRATION
JOHN F. KENNEDY SPACE CENTER, NASA
KENNEDY SPACE CENTER, FLORIDA

KSC LAUNCH PAD 39-B
ENVIRONMENTAL CONTROL SYSTEM (ECS) REFURBISHMENT
SINGLE LINE DIAGRAM
SWGR-A, MCC-A, AND PANEL ECS
DEMOLITION

FILE NO.	SIZE F	DWG.NO.	REV
		79K39602	
PCN. NO. 98898		SHEET 56 OF 187	

E-002

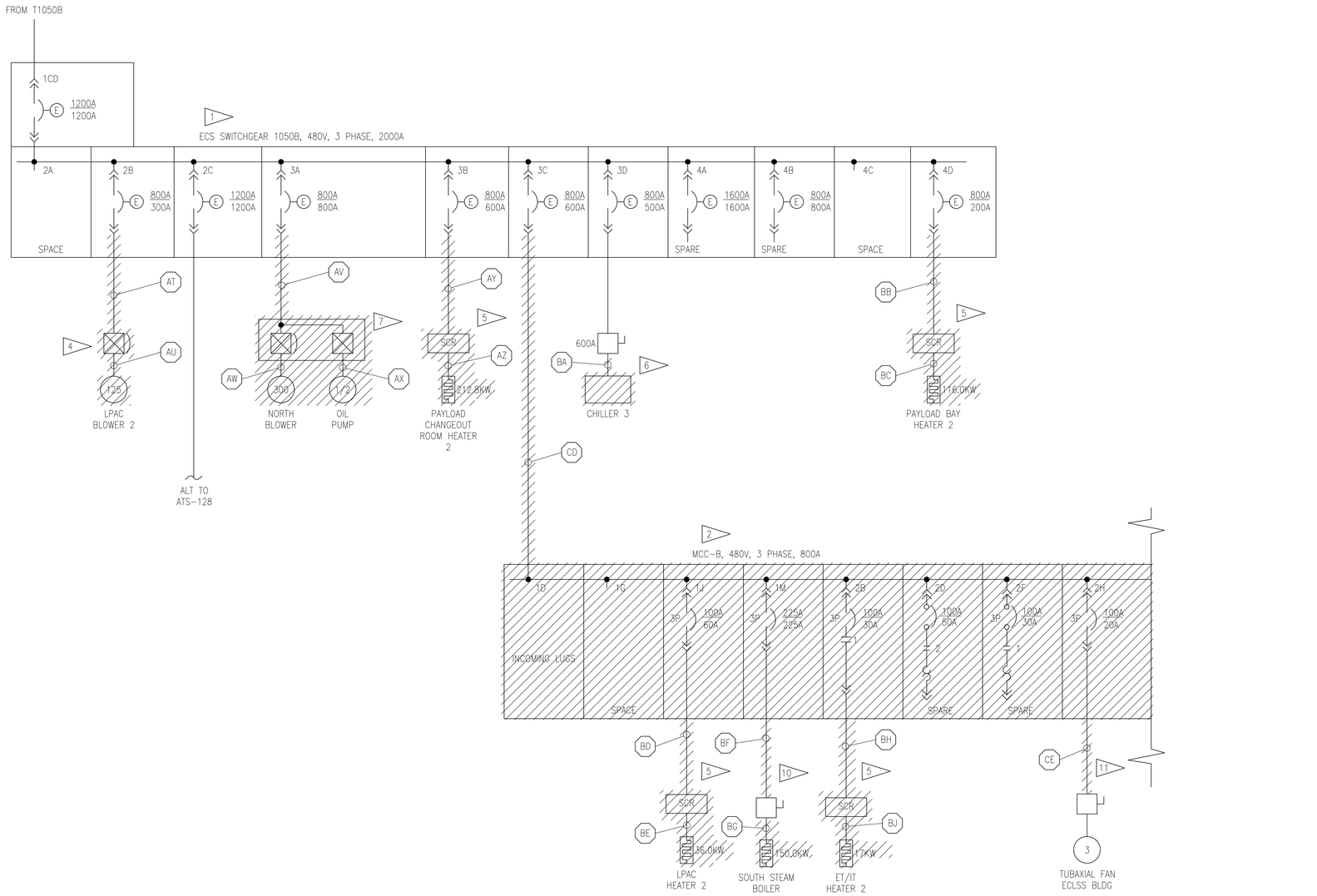

NOTES:

1. ECS SWITCHGEAR 1050B IS AN EXISTING EATON CUTLER HAMMER MAGNUM DS SWITCHGEAR. THIS SWITCHGEAR IS EQUIPPED WITH A BREAKER LIFTING DEVICE MOUNTED ON RAILS ON TOP OF THE SWITCHGEAR.
2. ECS MCC-B IS AN EXISTING EATON CUTLER HAMMER FREEDOM 2100 MCC. REMOVE EXISTING MCC. CONTRACTOR CAN RESERVE UNITS FOR INSTALLATION OR PROVIDE ALL NEW. CONTRACTOR RESPONSIBLE FOR DISPOSAL OF ANY UNUSED UNITS.
3. DEMOLITION DOES NOT INCLUDE REMOVAL OF ECS SWTICHGEAR OR PANELBOARD.
4. REMOVE AND DISPOSE OF CONDUCTOR, MOTOR STARTER, AND MOTOR. CONDUIT AND CABLE TRAY TO REMAIN FOR REUSE DURING INSTALLATION.
5. REMOVE AND DISPOSE OF CONDUCTOR, CONDUIT, HEATER CONTROLLER, HEATER CONTROLLER ENCLOSURE, AND HEATER. CABLE TRAY TO REMAIN FOR REUSE DURING INSTALLATION.
6. REMOVE AND DISPOSE OF CHILLER AND CONDUCTOR FROM DISCONNECT SWITCH TO CHILLER. DISCONNECT SWITCH AND CONDUIT TO REMAIN FOR REUSE DURING INSTALLATION.
7. REMOVE AND DISPOSE OF CONDUCTOR, CONDUIT, MOTOR STARTER, AND MOTOR. CABLE TRAY TO REMAIN FOR REUSE DURING INSTALLATION.
8. REMOVE AND DISPOSE OF CONDUCTOR, CONDUIT, DISCONNECT SWITCH, AND MOTOR.
9. REMOVE AND DISPOSE OF CONDUIT, CONDUCTOR, AND MOTOR.
10. REMOVE AND DISPOSE OF CONDUCTOR, CONDUIT AND BOILER. DISCONNECT SWITCH SHALL REMAIN FOR REUSE.
11. REMOVE AND DISPOSE OF CONDUCTOR AND CONDUIT.

LEGEND:

XX EQUIPMENT IDENTIFIER

DEMO

SYM	ZONE	DESCRIPTION	DATE	APPROVED
REVISIONS				

JACOBS
Jacobs Technology Inc.

SIGNATURES		DATE
DRAWN	MARTIN HENNIGH	3/07/14
CHECKED	JERRY HUNT	3/07/14
SUBMITTED	BRIAN GARLAND	3/07/14
ST OF LICENSURE: TN LICENSE NO: 00113330		
APPROVED	GLEN WARD	3/07/14
	DUNG TRANG	3/07/14

NATIONAL AERONAUTICS AND SPACE ADMINISTRATION
JOHN F. KENNEDY SPACE CENTER, NASA
KENNEDY SPACE CENTER, FLORIDA

KSC LAUNCH PAD 39-B
ENVIRONMENTAL CONTROL SYSTEM (ECS) REFURBISHMENT

SINGLE LINE DIAGRAM
SWGR-B AND MCC-B
DEMOLITION

FILE NO.	SIZE	DWG.NO.	REV
	F	79K39602	
PCN. NO. 98898		SHEET 57 OF 187	

E-003

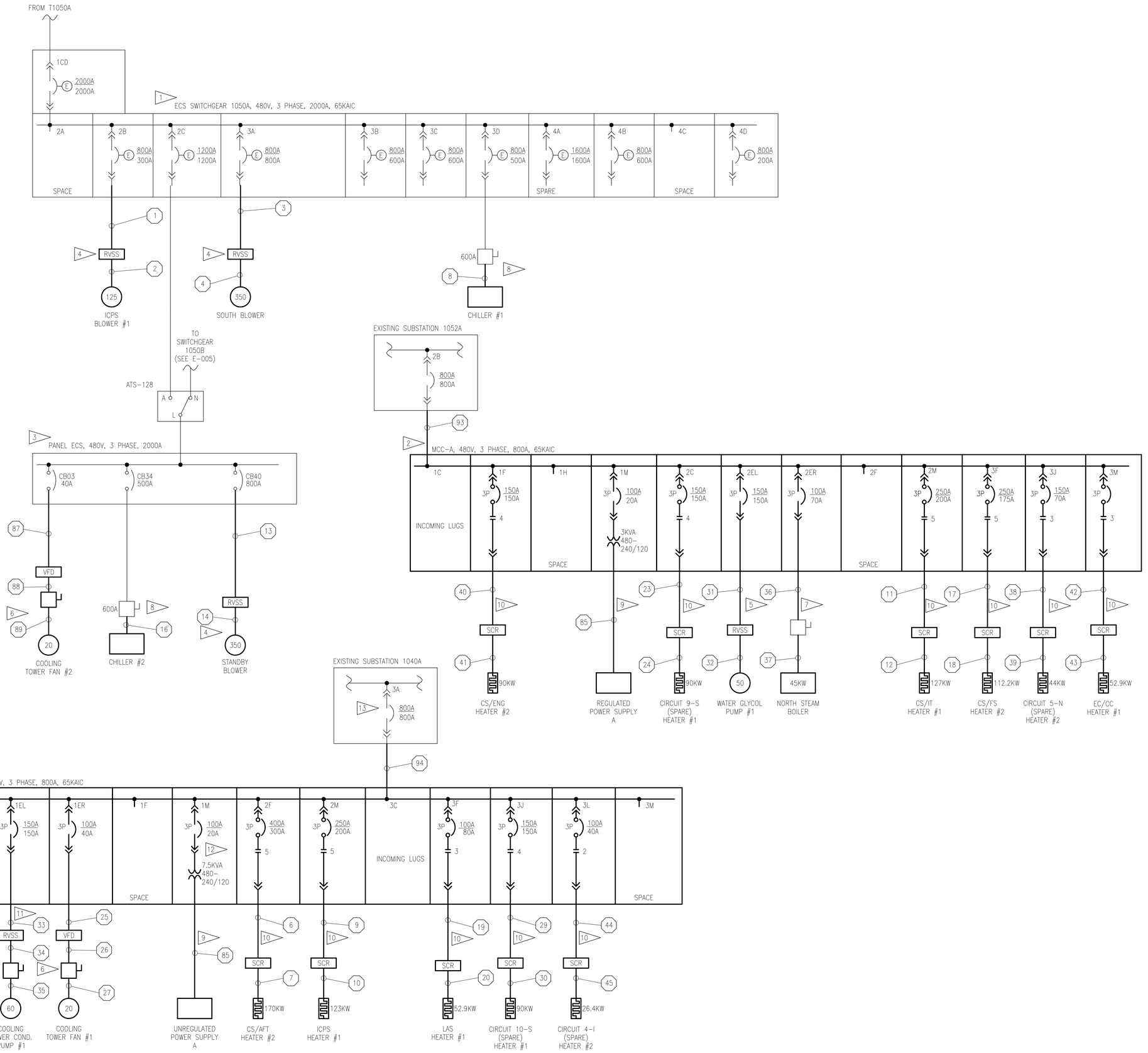

NOTES:

1. ECS SWITCHGEAR 1050A IS AN EXISTING EATON CUTLER HAMMER MAGNUM DS SWITCHGEAR. THIS SWITCHGEAR IS EQUIPPED WITH A BREAKER LIFTING DEVICE MOUNTED ON RAILS ON TOP OF THE SWITCHGEAR.
2. MCC-A AND MCC-B ARE NEW. CONTRACTOR MAY USE ANY EXISTING UNITS SHOWN FOR DEMOLITION ON DEMOLITION SHEETS. IF NEW MCC IS SAME MANUFACTURER AND MODEL.
3. PANEL ECS IS AN EXISTING PANELBOARD.
4. PROVIDE AND INSTALL CONDUCTOR AND REDUCED VOLTAGE SOFT STARTER. EXTEND OR MODIFY RACEWAY AS NECESSARY. REDUCED VOLTAGE STARTER SHALL BE A SOLID STATE TYPE. ALL SOLID STATE STARTERS SHALL BE FROM THE SAME MANUFACTURER. SEE SCHEMATIC DIAGRAM FOR DETAILS.
5. PROVIDE AND INSTALL CONDUCTORS, CONDUIT, AND REDUCED VOLTAGE MOTOR STARTER. MOTOR STARTER SHALL BE THE SOLID STATE TYPE.
6. PROVIDE AND INSTALL CONDUCTORS, CONDUIT, VFD, AND DISCONNECT SWITCH. REUSE EXISTING CABLE TRAY. DISCONNECT SWITCH SHALL BE LOCATED IN THE SAME LOCATION AS THE EXISTING DISCONNECT. PROVIDE SWITCH WITH AN EARLY BREAK AUXILIARY CONTACT TO DISABLE THE VFD BEFORE DISCONNECTING THE PHASE CONDUCTORS. SWITCH SHALL BE RATED NEMA 4X STAINLESS STEEL.
7. PROVIDE AND INSTALL CONDUCTORS AND BOILER COMPLETE WITH BOILER CONTROLLER. REUSE EXISTING DISCONNECT SWITCH.
8. PROVIDE AND INSTALL CONDUCTORS, CHILLER, AND CHILLER MOTOR STARTER. PROVIDE SKID MOUNTED MOTOR STARTERS. MOTOR STARTERS SHALL USE SOME FORM OF REDUCED VOLTAGE STARTING. RE-USE EXISTING RACEWAY. EXTEND OR MODIFY RACEWAY AS NECESSARY.
9. PROVIDE AND INSTALL CONDUCTORS AND ENCLOSURE. REUSE EXISTING RACEWAY. EXTEND OR MODIFY RACEWAY AS NECESSARY. SEE CONTROLS AND INSTRUMENTATION DRAWINGS FOR DETAILS.
10. PROVIDE AND INSTALL CONDUCTORS, CONDUIT, SCR CONTROLLERS, AND HEATERS. INSTALL NEW CABLE TRAY EXTENSION FOR CONDUCTORS INBOUND TO CONTROLLER. REUSE EXISTING CABLE TRAY FOR OUTBOUND CONDUCTORS. PROVIDE AND INSTALL A NEW ENCLOSURE FOR THE SCR CONTROLLER. MORE THAN ONE CONTROLLER MAY BE REQUIRED DEPENDING ON MANUFACTURER SELECTED.
11. PROVIDE AND INSTALL CONDUCTORS, CONDUIT, DISCONNECT SWITCH, AND REDUCED VOLTAGE MOTOR STARTER. MOTOR STARTER SHALL BE THE SOLID STATE TYPE.
12. ADDITIONAL COMPONENTS REQUIRED FOR THIS UNIT. SEE SHEET I-095.
13. CIRCUIT BREAKER 3A IS AN EXISTING SQUARE D DSII-608 WITH DIGITRIP 810D UNIT. PROVIDE AND INSTALL 800 AMP SENSOR AND RATING PLUG.

SYM	ZONE	DESCRIPTION	DATE	APPROVED
		REVISIONS		

JACOBS
Jacobs Technology Inc.

SIGNATURES		DATE
DRAWN	MARTIN HENNIGH	3/07/14
CHECKED	JERRY HUNT	3/07/14
SUBMITTED	BRIAN GARLAND	3/07/14
ST OF LICENSURE: TN LICENSE NO: 00113330		
APPROVED	GLEN WARD	3/07/14
	DUNG TRANG	3/07/14

NATIONAL AERONAUTICS AND SPACE ADMINISTRATION
JOHN F. KENNEDY SPACE CENTER, NASA
KENNEDY SPACE CENTER, FLORIDA

KSC LAUNCH PAD 39-B
ENVIRONMENTAL CONTROL SYSTEM (ECS) REFURBISHMENT

SINGLE LINE DIAGRAM
SWGR-A, MCC-A, AND PANEL ECS INSTALLATION

E-004

FILE NO. | SIZE F | DWG.NO. 79K39602 | REV
PCN. NO. 98898 | SHEET 58 OF 187

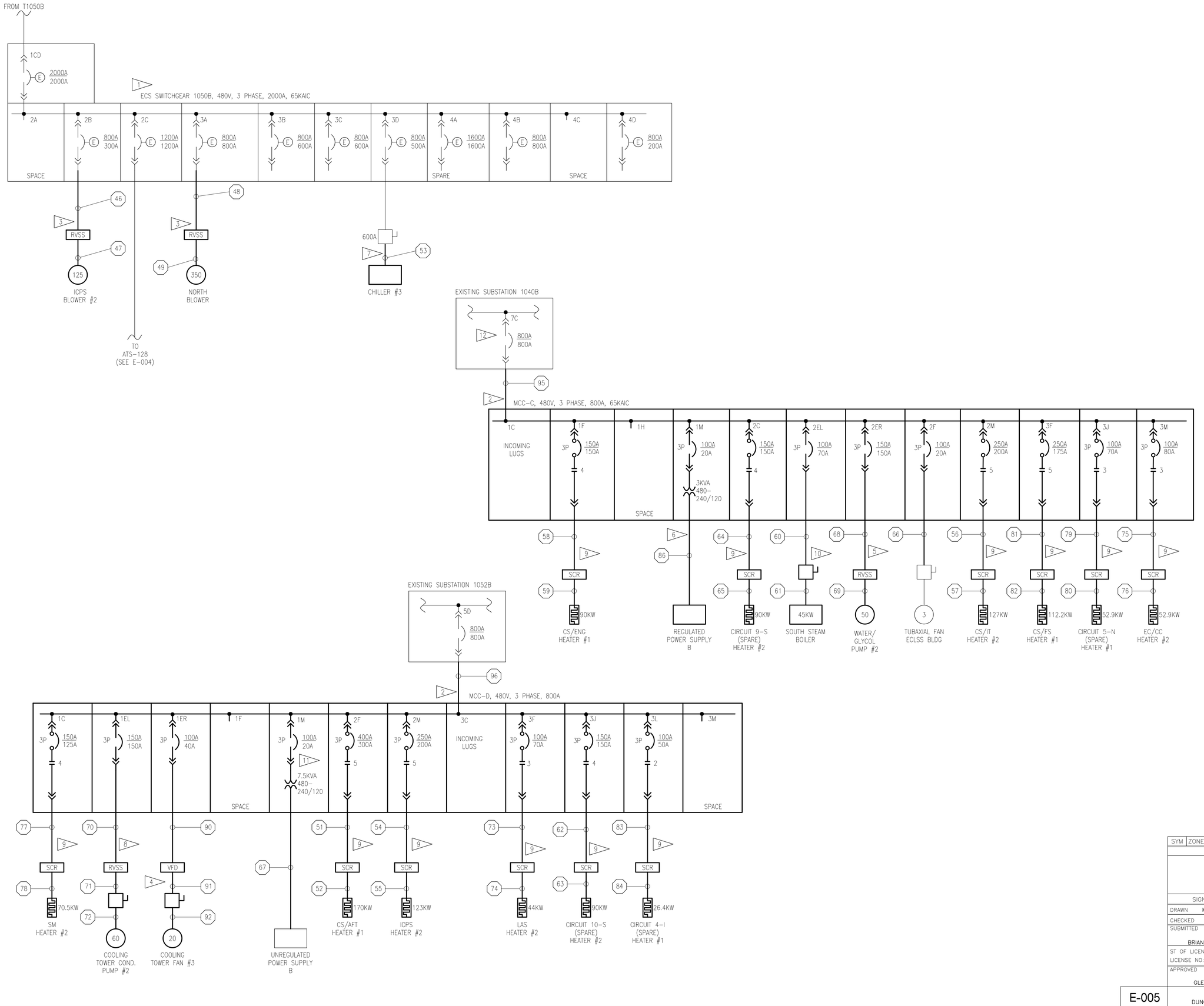

NOTES:

1. ECS SWITCHGEAR 1050B IS AN EXISTING EATON CUTLER HAMMER MAGNUM DS SWITCHGEAR. THIS SWITCHGEAR IS EQUIPPED WITH A BREAKER LIFTING DEVICE MOUNTED ON RAILS ON TOP OF THE SWITCHGEAR.
2. MCC-C AND MCC-D ARE NEW. CONTRACTOR MAY USE ANY EXISTING UNITS SHOWN FOR DEMOLITION ON DEMOLITION SHEETS. IF NEW MCC IS SAME MANUFACTURER AND MODEL.
3. PROVIDE AND INSTALL CONDUCTOR AND REDUCED VOLTAGE SOFT STARTER. EXTEND OR MODIFY RACEWAY AS NECESSARY. REDUCED VOLTAGE STARTER SHALL BE A SOLID STATE TYPE. ALL SOLID STATE STARTERS SHALL BE FROM THE SAME MANUFACTURER. SEE SCHEMATIC DIAGRAM FOR DETAILS.
4. PROVIDE AND INSTALL CONDUCTORS, CONDUIT, VFD, AND DISCONNECT SWITCH. REUSE EXISTING CABLE TRAY. DISCONNECT SWITCH SHALL BE LOCATED IN THE SAME LOCATION AS THE EXISTING DISCONNECT. PROVIDE SWITCH WITH AN EARLY BREAK AUXILIARY CONTACT TO DISABLE THE VFD BEFORE DISCONNECTING THE PHASE CONDUCTORS. SWITCH SHALL BE RATED NEMA 4X STAINLESS STEEL.
5. PROVIDE AND INSTALL CONDUCTORS, CONDUIT, AND REDUCED VOLTAGE MOTOR STARTER. MOTOR STARTER SHALL BE THE SOLID STATE TYPE.
6. PROVIDE AND INSTALL CONDUCTORS AND ENCLOSURE. REUSE EXISTING RACEWAY. EXTEND OR MODIFY RACEWAY AS NECESSARY. SEE CONTROLS AND INSTRUMENTATION DRAWINGS FOR DETAILS.
7. PROVIDE AND INSTALL CONDUCTORS, CHILLER, AND CHILLER MOTOR STARTER. PROVIDE SKID MOUNTED MOTOR STARTERS. MOTOR STARTERS SHALL USE SOME FORM OF REDUCED VOLTAGE STARTING. REUSE EXISTING RACEWAY. EXTEND OR MODIFY RACEWAY AS NECESSARY.
8. PROVIDE AND INSTALL CONDUCTORS, CONDUIT, DISCONNECT SWITCH, AND REDUCED VOLTAGE MOTOR STARTER. MOTOR STARTER SHALL BE THE SOLID STATE TYPE.
9. PROVIDE AND INSTALL CONDUCTORS, CONDUIT, SCR CONTROLLERS, AND HEATERS. INSTALL NEW CABLE TRAY EXTENSION FOR CONDUCTORS INBOUND TO CONTROLLER. REUSE EXISTING CABLE TRAY FOR OUTBOUND CONDUCTORS. PROVIDE AND INSTALL A NEW ENCLOSURE FOR THE SCR CONTROLLER. MORE THAN ONE CONTROLLER MAY BE REQUIRED DEPENDING ON MANUFACTURER SELECTED.
10. PROVIDE AND INSTALL CONDUCTORS AND BOILER COMPLETE WITH BOILER CONTROLLER. REUSE EXISTING DISCONNECT SWITCH.
11. ADDITIONAL COMPONENTS REQUIRED FOR THIS UNIT. SEE SHEET I-095.
12. CIRCUIT BREAKER 7C IS AN EXISTING SQUARE D DSII-608 WITH DIGITRIP 810D UNIT. PROVIDE AND INSTALL 800 AMP SENSOR AND RATING PLUG.

SYM	ZONE	DESCRIPTION	DATE	APPROVED
		REVISIONS		

JACOBS
Jacobs Technology Inc.

SIGNATURES		DATE
DRAWN	MARTIN HENNIGH	3/07/14
CHECKED	JERRY HUNT	3/07/14
SUBMITTED	BRIAN GARLAND	3/07/14
ST OF LICENSURE: TN LICENSE NO: 00113330		
APPROVED	GLEN WARD	3/07/14
	DUNG TRANG	3/07/14

NATIONAL AERONAUTICS AND SPACE ADMINISTRATION
JOHN F. KENNEDY SPACE CENTER, NASA
KENNEDY SPACE CENTER, FLORIDA

KSC LAUNCH PAD 39-B
ENVIRONMENTAL CONTROL SYSTEM (ECS) REFURBISHMENT

SINGLE LINE DIAGRAM SWGR-B AND MCC-B INSTALLATION

E-005

FILE NO. | SIZE F | DWG.NO. 79K39602 | REV
PCN. NO. 98898 | SHEET 59 OF 187

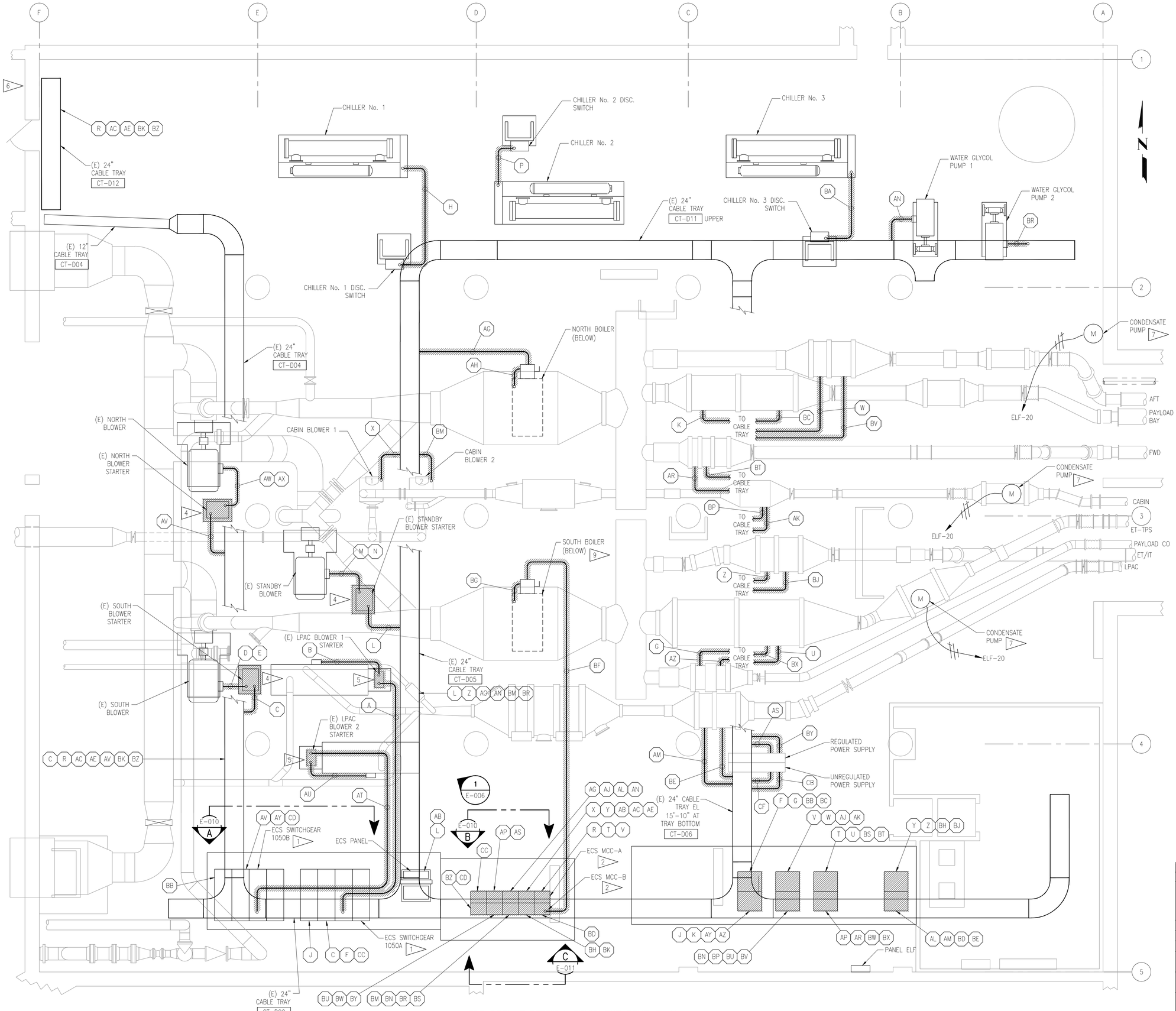

ECS ROOM ELECTRICAL EQUIPMENT DEMO PLAN

SCALE: 1/4"=1'-0"

NOTES:

1. ECS SWITCHGEAR 1050A AND 1050B IS AN EXISTING EATON CUTLER HAMMER MAGNUM DS SWITCHGEAR. UNLESS NOTED OTHERWISE, EXISTING CABLE ROUTING FROM THE SWITCHGEAR CONSISTS OF VERTICAL CONDUIT FROM THE SWITCHGEAR, CABLE TRAY, AND VERTICAL CONDUIT TO THE EQUIPMENT.
2. ECS MCC-A AND MCC-B IS AN EXISTING EATON CUTLER HAMMER FREEDOM 2100 MCC. ALL CABLES FROM THE MCC EXIT FROM THE TOP. UNLESS NOTED OTHERWISE, EXISTING CABLE ROUTING FROM THE MCC CONSISTS OF VERTICAL CONDUIT FROM THE MCC, CABLE TRAY, AND VERTICAL CONDUIT TO THE EQUIPMENT.
3. HATCHING INDICATES DEMOLITION. SEE M-004 FOR CONCRETE DEMOLITION.
4. STARTER IS A FREE STANDING ENCLOSURE MOUNTED ON A CONCRETE HOUSEKEEPING PAD 28"X36" AND 6-1/2" HIGH.
5. STARTER IS A FREE STANDING ENCLOSURE MOUNTED ON A CONCRETE HOUSEKEEPING PAD 28"X28" AND 6-1/2" HIGH.
6. TO COOLING TOWERS, SEE SHEET E-008.
7. REMOVE AND DISPOSE OF CONDENSATE PUMPS AND CONDUCTOR. CONTRACTOR MAY CHOOSE TO REUSE EXISTING CONDUIT FOR INSTALLATION. CONTRACTOR RESPONSIBLE FOR REMOVAL AND DISPOSAL OF ANY UNUSED CONDUIT.

LEGEND:

XX EQUIPMENT IDENTIFIER

DEMO

PIC 1
THIS SHEET

SYM	ZONE	DESCRIPTION	DATE	APPROVED

REVISIONS

JACOBS
Jacobs Technology Inc.

NATIONAL AERONAUTICS AND SPACE ADMINISTRATION
JOHN F. KENNEDY SPACE CENTER, NASA
KENNEDY SPACE CENTER, FLORIDA

SIGNATURES		DATE
DRAWN	MARTIN HENNIGH	3/07/14
CHECKED	JERRY HUNT	3/07/14
SUBMITTED	BRIAN GARLAND	3/07/14
ST OF LICENSURE: TN LICENSE NO: 00113330		
APPROVED	GLEN WARD	3/07/14
	DUNG TRANG	3/07/14

KSC LAUNCH PAD 39-B
ENVIRONMENTAL CONTROL SYSTEM (ECS) REFURBISHMENT
ECS ROOM ELECTRICAL
SYSTEM LAYOUT
DEMOLITION

FILE NO.	SIZE	DWG.NO.	REV
	F	79K39602	

PCN. NO. 98898 SHEET 60 OF 187

E-006

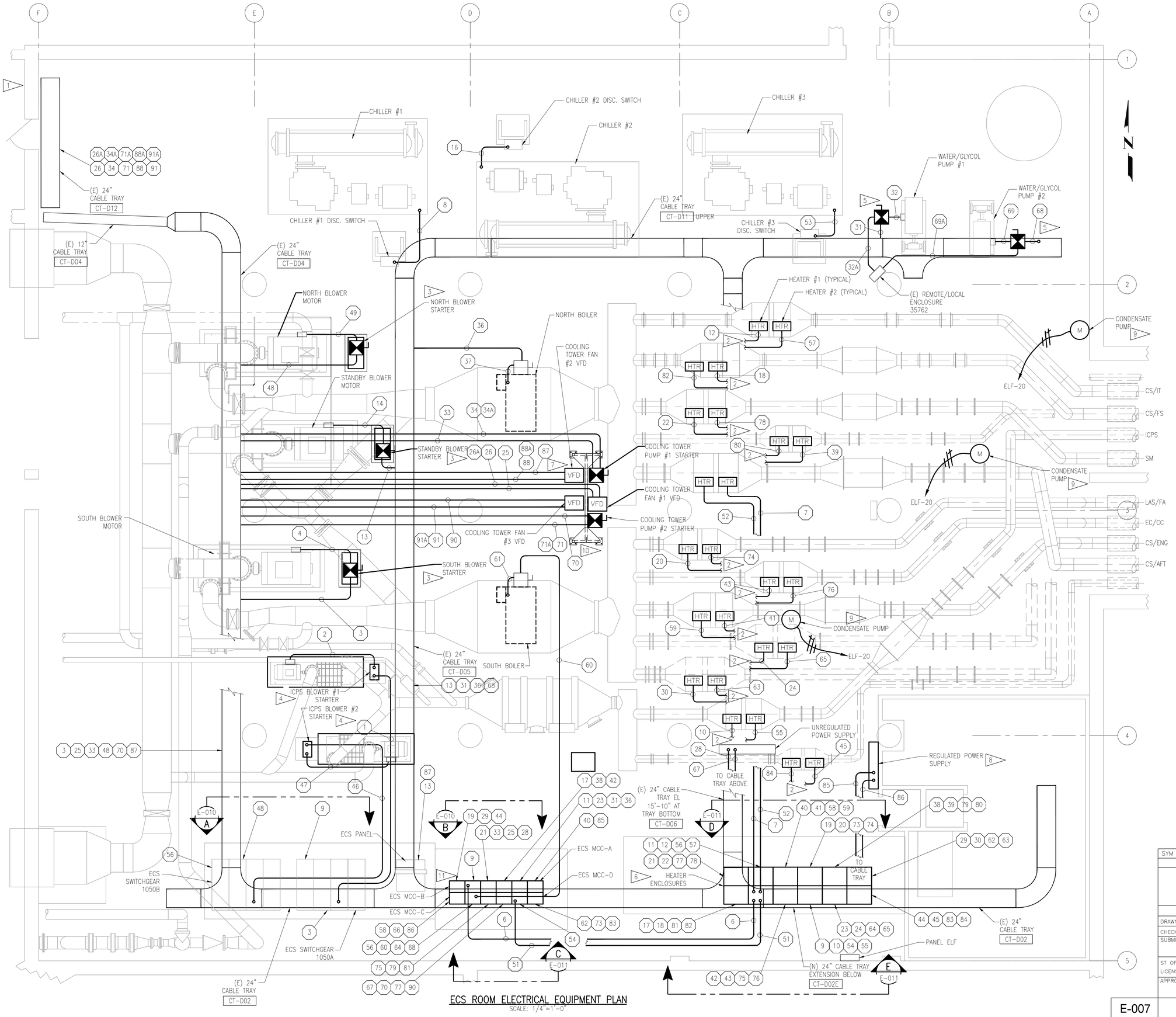

ECS ROOM ELECTRICAL EQUIPMENT PLAN

SCALE: 1/4"=1'-0"

NOTES:

1. TO COOLING TOWERS, SEE SHEET E-009.
2. CABLE SHALL BE ROUTED FROM CABLE TRAY TO HEATERS. CABLE TRAY IS APPROXIMATELY AT THE SAME ELEVATION AS THE AIR DUCTING. PROVIDE AND INSTALL ELECTRICAL CONNECTOR ON DUCTING TO ENSURE AIR TIGHT SEAL.
3. PROVIDE AND INSTALL CONDUCTOR, CONDUIT, AND REDUCED VOLTAGE SOFT STARTER. REUSE EXISTING CABLE TRAY. PROVIDE NEW CONCRETE EQUIPMENT PAD FOR FREE-STANDING SOFT STARTER ENCLOSURE. EQUIPMENT PAD SHALL BE ISOLATED FROM BLOWER EQUIPMENT PAD. PROVIDE AND INSTALL BLOWER MANUFACTURER'S PROTECTION PANEL. INSTALL SUPPORTS FOR PROTECTION PANEL. DEPENDING ON MANUFACTURER, NOMINAL SIZE OF PROTECTION PANEL IS 14"W X 16"H X 10"D. CONTRACTOR RESPONSIBLE FOR ALL INTERCONNECT WIRING. SEE E-017 FOR INTERCONNECT WIRING BETWEEN STARTER AND PROTECTION PANEL.
4. PROVIDE AND INSTALL CONDUCTOR AND REDUCED VOLTAGE SOFT STARTER. REUSE EXISTING CONDUITS. EXTEND OR MODIFY RACEWAY AS NECESSARY. PROVIDE NEW CONCRETE EQUIPMENT PAD FOR FREE-STANDING SOFT STARTER ENCLOSURE. IF ENCLOSURE IS NOT FREE-STANDING, PROVIDE ADEQUATE SUPPORT STRUCTURE WITH CONCRETE EQUIPMENT PAD. EQUIPMENT PAD SHALL BE ISOLATED FROM BLOWER EQUIPMENT PAD. PROVIDE AND INSTALL BLOWER MANUFACTURER'S PROTECTION PANEL. INSTALL SUPPORTS FOR PROTECTION PANEL. DEPENDING ON MANUFACTURER, NOMINAL SIZE OF PROTECTION PANEL IS 14"W X 16"H X 10"D. CONTRACTOR RESPONSIBLE FOR ALL INTERCONNECT WIRING. SEE E-017 FOR INTERCONNECT WIRING BETWEEN STARTER AND PROTECTION PANEL
5. PROVIDE AND INSTALL REDUCED VOLTAGE SOFT STARTER. USE EXISTING VERTICAL UNISTRUT FOR SUPPORT. PROVIDE AND INSTALL HORIZONTAL UNISTRUT BRACING FOR SUPPORTING STARTER.
6. HEATER ENCLOSURE SHALL BE A FREESTANDING NEMA 1 ENCLOSURE. ENCLOSURE SHALL BE MOUNTED ON EXISTING CONCRETE PAD. ENCLOSURE SHOWN IS FOR DESIGN INTENT ONLY. CONTRACTOR RESPONSIBLE FOR DESIGN, LAYOUT, AND SIZE OF THE ENCLOSURE. SEE SCHEMATIC DIAGRAM FOR WIRING INFORMATION.
7. PROVIDE AND INSTALL REDUCED VOLTAGE SOFT STARTERS, VFDS, SUPPORTING STRUCTURE, AND ALL ASSOCIATED CONDUCTOR AND CONDUIT. EXACT LOCATION OF SUPPORT STRUCTURE SHALL BE DETERMINED IN THE FIELD BY THE CONTRACTOR.
8. PROVIDE AND INSTALL ENCLOSURE, CONDUCTORS, AND CONDUIT. CONTRACTOR RESPONSIBLE FOR FIELD ROUTING OF CONDUIT. SEE INSTRUMENTATION DRAWINGS FOR ENCLOSURE DETAILS.
9. REUSE EXISTING CIRCUIT BREAKER. CONTRACTOR MAY REUSE EXISTING CONDUIT. CONTRACTOR RESPONSIBLE FOR ANY MODIFICATIONS TO EXISTING RACEWAY AND ANY NEW RACEWAY.
10. FOR RACK FRAMING DETAILS, SEE SHEET E-013.
11. PROVIDE AND INSTALL NEW MCC-A, MCC-B, MCC-C, AND MCC-D ON EXISTING CONCRETE EQUIPMENT PAD.

LEGEND:

XX EQUIPMENT IDENTIFIER

SYM	ZONE	DESCRIPTION	DATE	APPROVED
REVISIONS				

JACOBS
Jacobs Technology Inc.

SIGNATURES		DATE
DRAWN	MARTIN HENNIGH	3/07/14
CHECKED	JERRY HUNT	3/07/14
SUBMITTED	BRIAN GARLAND	3/07/14
ST OF LICENSURE: TN LICENSE NO: 00113330		
APPROVED	GLEN WARD	3/07/14
	DUNG TRANG	3/07/14

NATIONAL AERONAUTICS AND SPACE ADMINISTRATION
JOHN F. KENNEDY SPACE CENTER, NASA
KENNEDY SPACE CENTER, FLORIDA

KSC LAUNCH PAD 39-B
ENVIRONMENTAL CONTROL SYSTEM (ECS) REFURBISHMENT
ECS ROOM ELECTRICAL SYSTEM LAYOUT INSTALLATION

FILE NO.	SIZE	DWG.NO.	REV
	F	79K39602	

PCN. NO. 98898 SHEET 61 OF 187

E-007

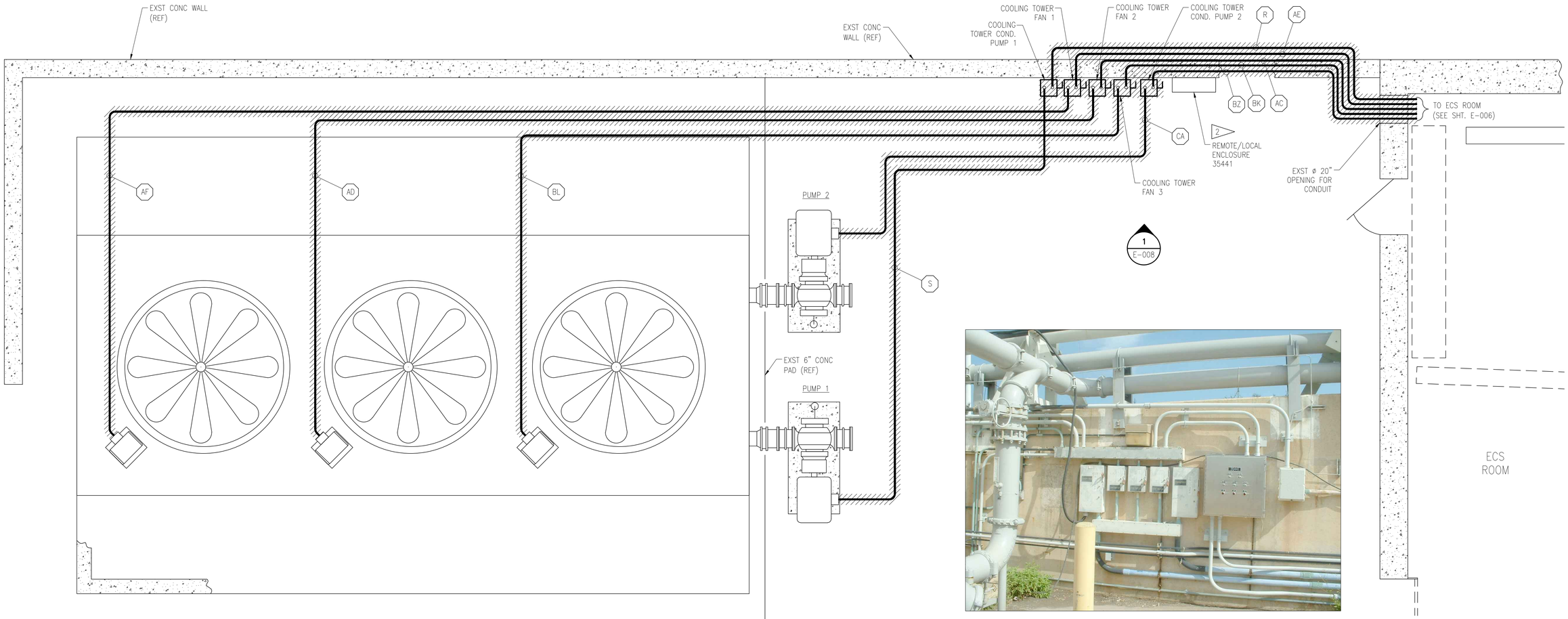

PIC 1
ON THIS SHEET

NOTES:

1. ALL POWER CONDUCTORS ARE CONTAINED IN TWO CONDUITS FROM THE WALL PENETRATIONS TO THE DISCONNECT SWITCHES. REMOVE AND DISPOSE OF ALL CONDUCTORS, CONDUITS, WIREWAYS, SUPPORTS, AND DISCONNECT SWITCHES.

2 REMOTE/LOCAL ENCLOSURE 35441 CONTAINS CONTROL CIRCUITS AND SELECTOR SWITCHES FOR THE EXISTING COOLING TOWER SYSTEM. REMOVE AND DISPOSE OF CONDUCTORS AND CONDUIT FROM THIS ENCLOSURE TO THE DISCONNECT SWITCHES. ENCLOSURE AND SWITCHES SHALL BE REUSED DURING INSTALLATION. SEE SCHEMATIC DIAGRAM FOR WIRING DETAILS.

LEGEND:

XX EQUIPMENT IDENTIFIER

DEMO

COOLING TOWER AREA ELECTRICAL EQUIPMENT DEMO PLAN

SCALE: 1/2" = 1'-0"

SYM	ZONE	DESCRIPTION	DATE	APPROVED
REVISIONS				

JACOBS
Jacobs Technology Inc.

SIGNATURES	DATE
DRAWN MARTIN HENNIGH	3/07/14
CHECKED JERRY HUNT	3/07/14
SUBMITTED BRIAN GARLAND	3/07/14
ST OF LICENSURE: TN LICENSE NO: 00113330	
APPROVED GLEN WARD	3/07/14
DUNG TRANG	3/07/14

NATIONAL AERONAUTICS AND SPACE ADMINISTRATION
JOHN F. KENNEDY SPACE CENTER, NASA
KENNEDY SPACE CENTER, FLORIDA

KSC LAUNCH PAD 39-B
ENVIRONMENTAL CONTROL SYSTEM (ECS) REFURBISHMENT

COOLING TOWER ELECTRICAL SYSTEM LAYOUT DEMOLITION

FILE NO.	SIZE	DWG.NO.	REV
	F	79K39602	
PCN. NO. 98898		SHEET 62 OF 187	

E-008

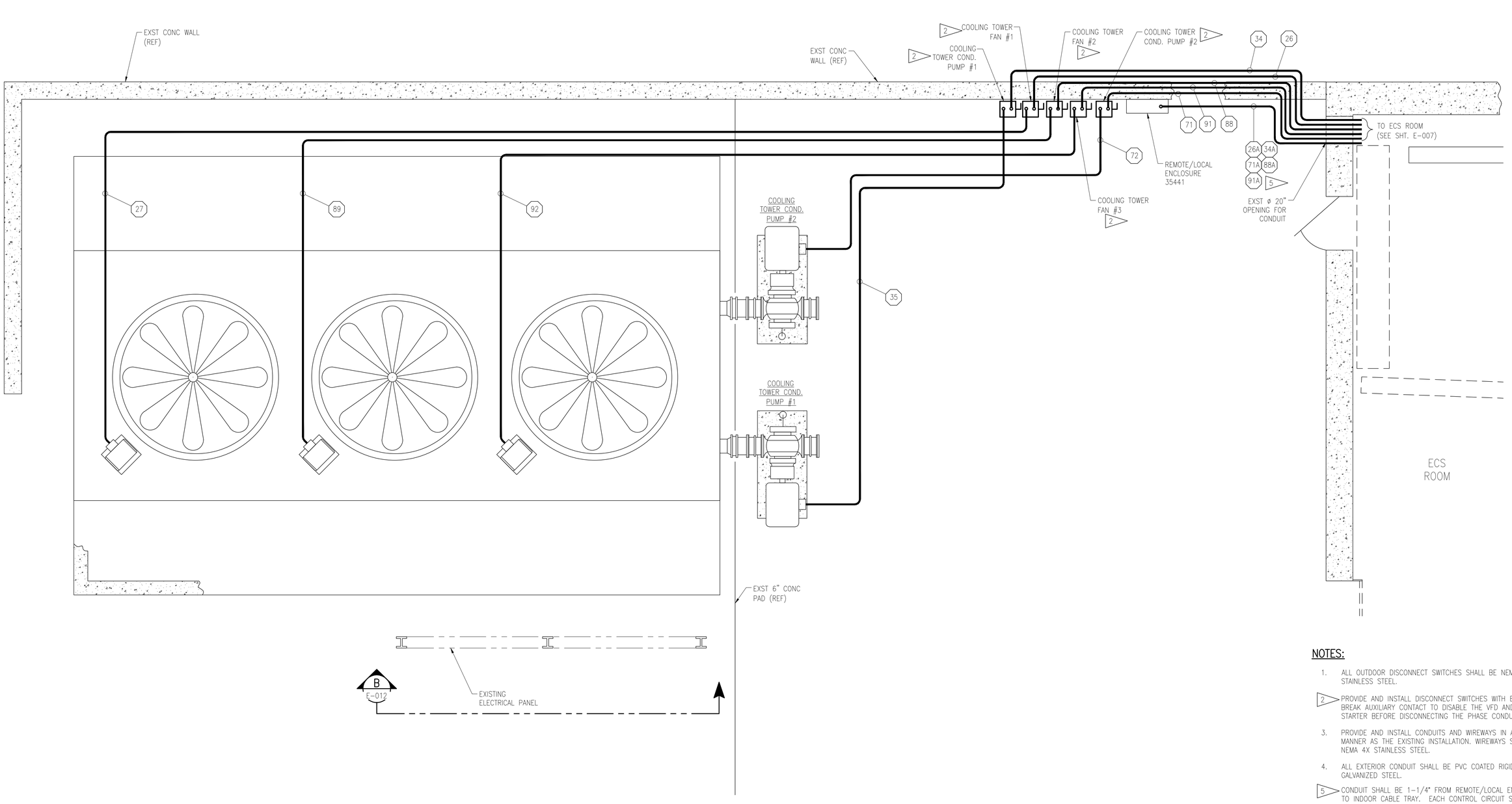

COOLING TOWER AREA ELECTRICAL EQUIPMENT PLAN

SCALE: 1/2" = 1'-0"

NOTES:

1. ALL OUTDOOR DISCONNECT SWITCHES SHALL BE NEMA 4X STAINLESS STEEL.
2. PROVIDE AND INSTALL DISCONNECT SWITCHES WITH EARLY BREAK AUXILIARY CONTACT TO DISABLE THE VFD AND SOFT STARTER BEFORE DISCONNECTING THE PHASE CONDUCTORS.
3. PROVIDE AND INSTALL CONDUITS AND WIREWAYS IN A SIMILAR MANNER AS THE EXISTING INSTALLATION. WIREWAYS SHALL BE NEMA 4X STAINLESS STEEL.
4. ALL EXTERIOR CONDUIT SHALL BE PVC COATED RIGID GALVANIZED STEEL.
5. CONDUIT SHALL BE 1-1/4" FROM REMOTE/LOCAL ENCLOSURE TO INDOOR CABLE TRAY. EACH CONTROL CIRCUIT SHALL BE ROUTED FROM THE CABLE TRAY TO THE RESPECTIVE DEVICE WITH MAIN CIRCUIT CONDUCTORS FOR TERMINATION.

SYM	ZONE	DESCRIPTION	DATE	APPROVED
REVISIONS				

JACOBS
Jacobs Technology Inc.

SIGNATURES		DATE
DRAWN	MARTIN HENNIGH	3/07/14
CHECKED	JERRY HUNT	3/07/14
SUBMITTED	BRIAN GARLAND	3/07/14
ST OF LICENSURE: TN LICENSE NO: 00113330		
APPROVED	GLEN WARD	3/07/14
	DUNG TRANG	3/07/14

NATIONAL AERONAUTICS AND SPACE ADMINISTRATION
JOHN F. KENNEDY SPACE CENTER, NASA
KENNEDY SPACE CENTER, FLORIDA

KSC LAUNCH PAD 39-B
ENVIRONMENTAL CONTROL SYSTEM (ECS) REFURBISHMENT

COOLING TOWER ELECTRICAL SYSTEM LAYOUT INSTALLATION

FILE NO.	SIZE	DWG.NO.	REV
	F	79K39602	
PCN. NO. 98898		SHEET 63 OF 187	

E-009

NOTES:

1. ECS SWITCHGEAR 1050A AND 1050B ARE EXISTING EATON CUTLER HAMMER MAGNUM DS SWITCHGEAR. THIS SWITCHGEAR IS EQUIPPED WITH A BREAKER LIFTING DEVICE MOUNTED ON RAILS ON TOP OF THE SWITCHGEAR.
2. ECS MCC–A IS AN EXISTING EATON CUTLER HAMMER FREEDOM 2100 MCC. MCC UNITS MAY BE RETAINED FOR INSTALLATION IN THE NEW MCC IF MANUFACTURER AND MODEL ARE THE SAME AS EXISTING.
3. HATCHING OVER TEXT INDICATES A LABEL CHANGE. REMOVE AND DISPOSE OF EXISTING LABEL. PROVIDE AND INSTALL NEW LABEL TO MATCH BOLD TEXT.

LEGEND:

DEMO

1	2	3	4
1AB METERING	2A SPACE	3A SOUTH BLOWER & OIL PUMP	4A SPARE
	2B LPAC BLOWER 1	3B PAYLOAD CHECKOUT ROOM HEATER 1	4B SPARE
1CD MAIN 1050A	2C ATS–128 (ALT)	3C MCC–A	4C SPACE
	2D PANEL S3	3D CHILLER 1	4D PAYLOAD BAY HEATER 1

ECS SWITCHGEAR 1050A

1	2	3	4
1AB METERING	2A SPACE	3A NORTH BLOWER & OIL PUMP	4A SPARE
	2B LPAC BLOWER 2	3B PAYLOAD CHANGEOUT ROOM HEATER 2	4B SPARE
1CD MAIN 1050B	2C ATS–128 (NORM)	3C MCC–B	4C SPACE
	2D PANEL S2	3D CHILLER 3	4D PAYLOAD BAY HEATER 2

ECS SWITCHGEAR 1050B

1 DEMOLITION ELEVATION (A / E–006)
SCALE: 1"=1'–0"

1	2	3	4
1AB METERING	2A SPACE	3A **SOUTH BLOWER**	4A SPARE
	2B **ICPS BLOWER #1**	3B **SPARE**	4B **SPARE**
1CD MAIN 1050A	2C ATS–128 (ALT)	3C MCC–A	4C SPACE
	2D PANEL S3	3D CHILLER #1	4D **SPARE**

ECS SWITCHGEAR 1050A

1	2	3	4
1AB METERING	2A SPACE	3A **NORTH BLOWER**	4A SPARE
	2B **ICPS BLOWER #2**	3B **SPARE**	4B **SPARE**
1CD MAIN 1050B	2C ATS–128 (NORM)	3C MCC–B	4C SPACE
	2D PANEL S2	3D CHILLER #3	4D **SPARE**

ECS SWITCHGEAR 1050B

1 INSTALLATION ELEVATION (A / E–007)
SCALE: 1"=1'–0"

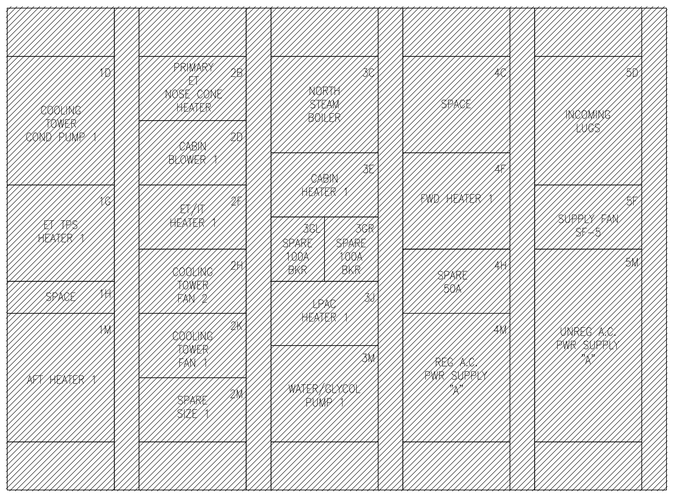

MCC–A

2 DEMOLITION ELEVATION (B / E–006)
SCALE: 1"=1'–0"

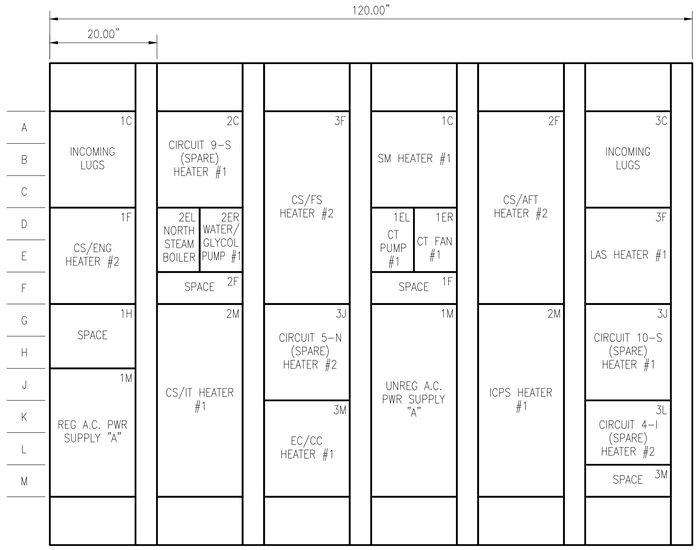

INSTALLATION ELEVATION (B / E–007)
SCALE: 1"=1'–0"

SYM	ZONE	DESCRIPTION	DATE	APPROVED
REVISIONS				

JACOBS
Jacobs Technology Inc.

SIGNATURES		DATE
DRAWN	MARTIN HENNIGH	3/07/14
CHECKED	JERRY HUNT	3/07/14
SUBMITTED	BRIAN GARLAND	3/07/14
ST OF LICENSURE: TN LICENSE NO: 00113330		
APPROVED	GLEN WARD	3/07/14
	DUNG TRANG	3/07/14

NATIONAL AERONAUTICS AND SPACE ADMINISTRATION
JOHN F. KENNEDY SPACE CENTER, NASA
KENNEDY SPACE CENTER, FLORIDA

KSC LAUNCH PAD 39-B
ENVIRONMENTAL CONTROL SYSTEM (ECS) REFURBISHMENT

ELECTRICAL DETAILS AND ELEVATIONS
ECS SWITCHGEAR
1050A, 1050B, AND MCC-A

FILE NO.	SIZE	DWG.NO.	REV
	F	79K39602	
PCN. NO. 98898		SHEET 64 OF 187	

E-010

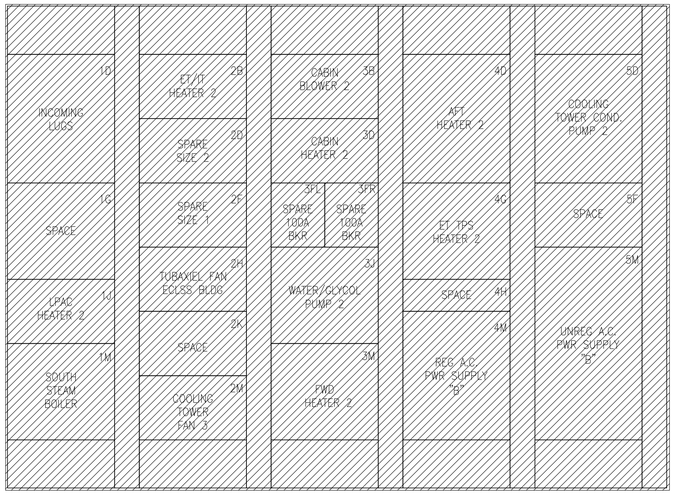

MCC-B

1 DEMOLITION ELEVATION C
SCALE: 1"=1'-0" E-006

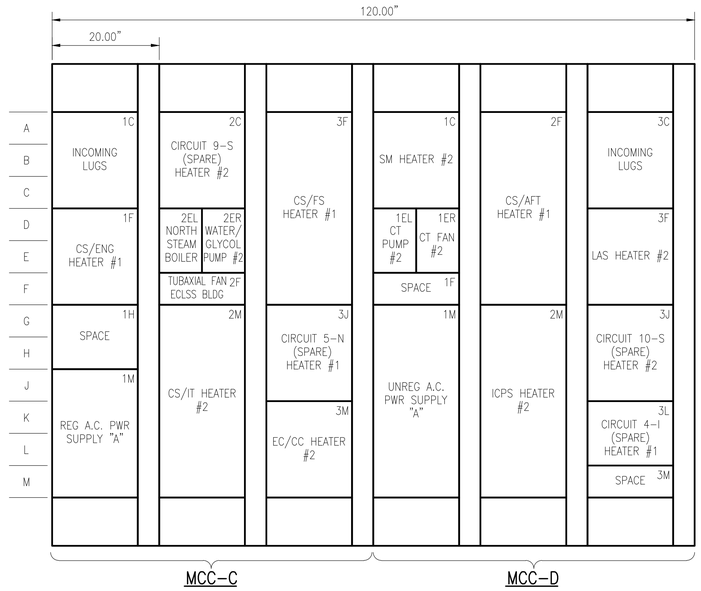

MCC-C MCC-D

INSTALLATION ELEVATION C
SCALE: 1"=1'-0" E-006

NOTES:

1. ECS MCC-B IS AN EXISTING EATON CUTLER HAMMER FREEDOM 2100 MCC. MCC UNITS MAY BE RETAINED FOR INSTALLATION IN THE NEW MCC IF MANUFACTURER AND MODEL ARE THE SAME AS EXISTING.
2. HEATER CONTROLLER ENCLOSURE DETAILS ARE SHOWN FOR DESIGN INTENT ONLY. CONTRACTOR RESPONSIBLE FOR ENCLOSURE SIZE, POSITION, AND SETTING OF ENCLOSURE.
3. PROVIDE AND INSTALL NEW CABLE TRAY EXTENSION BELOW EXISTING CABLE TRAY. CABLE TRAY SHALL BE 5" HIGH BY 24" WIDE, ALUMINUM LADDER WITH 9" RUNG SPACINGS. PROVIDE NEW SUPPORT SYSTEM FOR THIS SECTION. ROUTE INCOMING CONDUCTORS IN THE NEW EXTENSION, AND ROUTE ALL OUTBOUND CONDUCTORS IN THE EXISTING CABLE TRAY. PROVIDE AND INSTALL 4/0 BARE COPPER CONDUCTOR ROUTED IN NEW CABLE TRAY. BOND NEW GROUND CONDUCTOR TO EXISTING CONDUCTOR.
4. PROVIDE AND INSTALL MULTIPLE ELECTRICAL SOURCES WARNING LABEL FOR EACH HEATER CONTROLLER ENCLOSURE. PROVIDE AND INSTALL A LABEL FOR EACH HEATER CONTROLLER ENCLOSURE INDICATING THE SOURCE OF POWER.

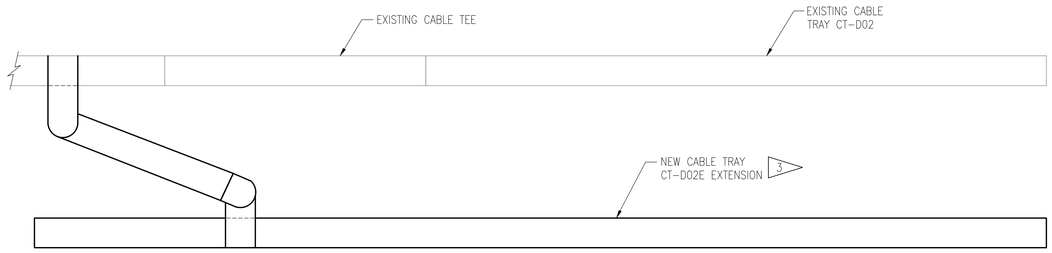

LEGEND:

DEMO

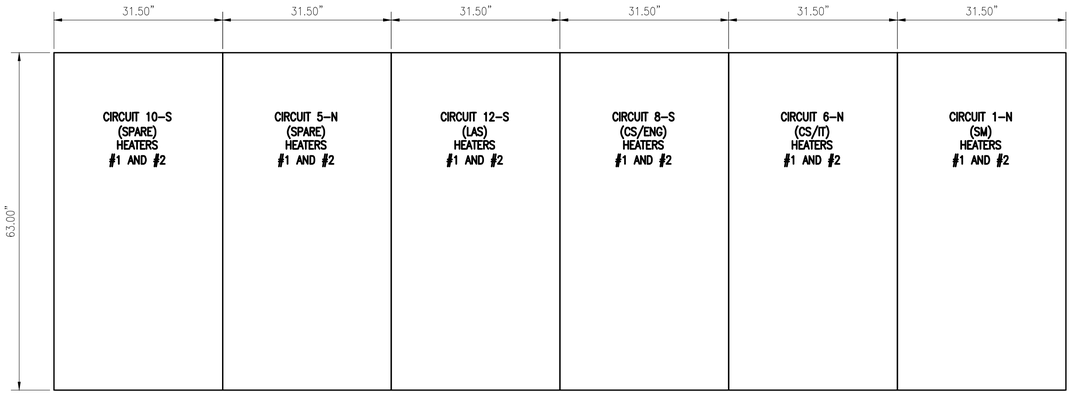

INSTALLATION ELEVATION D
SCALE: 1"=1'-0" E-007

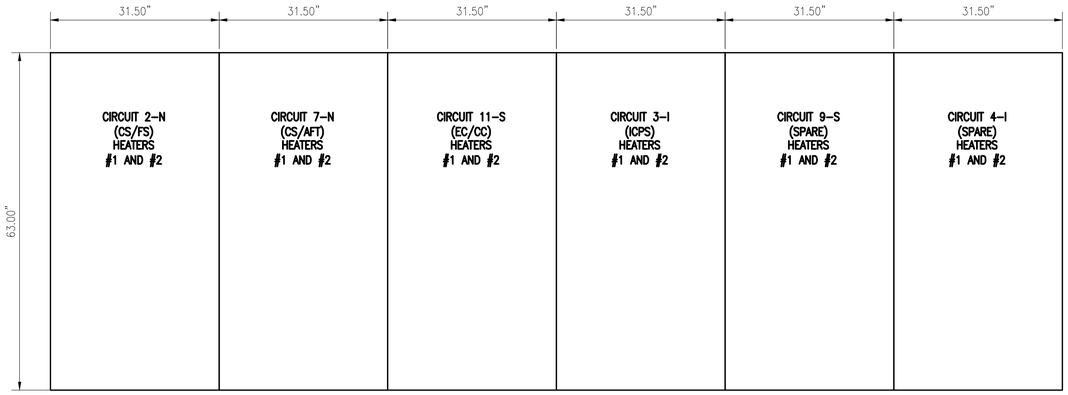

INSTALLATION ELEVATION E
SCALE: 1"=1'-0" E-007

SYM	ZONE	DESCRIPTION	DATE	APPROVED
REVISIONS				

JACOBS
Jacobs Technology Inc.

SIGNATURES		DATE
DRAWN	MARTIN HENNIGH	3/07/14
CHECKED	JERRY HUNT	3/07/14
SUBMITTED	BRIAN GARLAND	3/07/14
ST OF LICENSURE: TN LICENSE NO: 00113330		
APPROVED	GLEN WARD	3/07/14
	DUNG TRANG	3/07/14

NATIONAL AERONAUTICS AND SPACE ADMINISTRATION
JOHN F. KENNEDY SPACE CENTER, NASA
KENNEDY SPACE CENTER, FLORIDA

KSC LAUNCH PAD 39-B
ENVIRONMENTAL CONTROL SYSTEM (ECS) REFURBISHMENT
ELECTRICAL DETAILS AND ELEVATIONS
MCC-B

FILE NO.	SIZE	DWG.NO.	REV
	F	79K39602	
PCN. NO. 98898		SHEET 65 OF 187	

E-011

NOTES:

1. PANEL PG CIRCUIT BREAKER 10 SUPPLIES POWER TO THE 30 KVA TRANSFORMER AND PANEL PA–CT. REMOVE AND DISPOSE OF CONDUCTORS, WIREWAY, AND TRANSFORMER. PROVIDE AND INSTALL NEW CONDUCTORS, CONDUIT, AND TRANSFORMER. TRANSFORMER SHALL BE NEMA 4X STAINLESS STEEL.

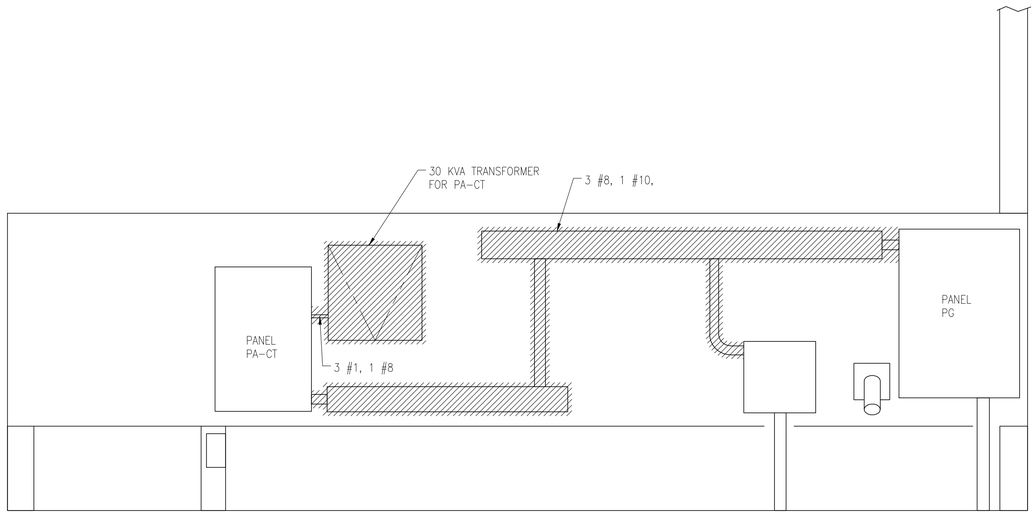

DEMOLITION (A / E–008)
SCALE: 3/4"=1'–0"

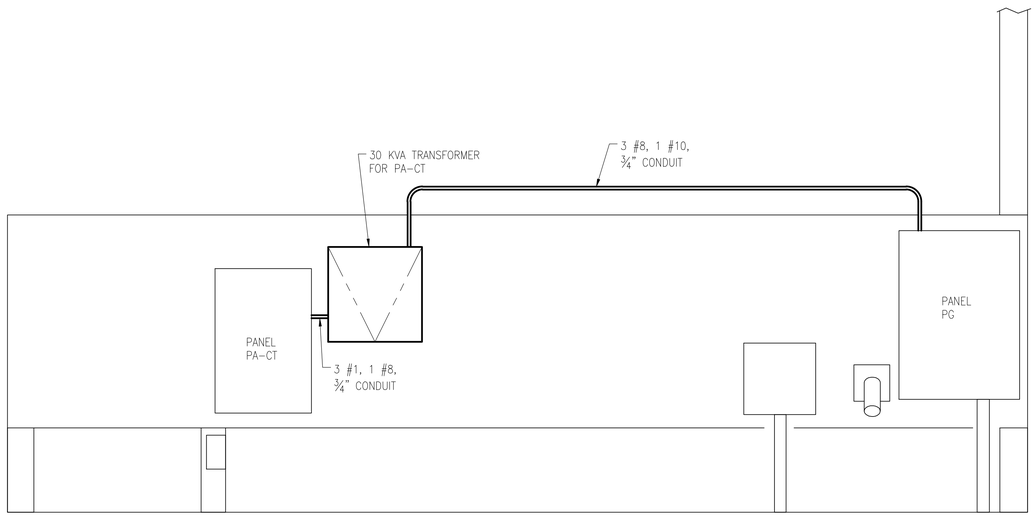

INSTALLATION (B / E–009)
SCALE: 3/4"=1'–0"

SYM	ZONE	DESCRIPTION	DATE	APPROVED
REVISIONS				

JACOBS
Jacobs Technology Inc.

SIGNATURES		DATE
DRAWN	MARTIN HENNIGH	3/07/14
CHECKED	JERRY HUNT	3/07/14
SUBMITTED	BRIAN GARLAND	3/07/14
ST OF LICENSURE: TN LICENSE NO: 00113330		
APPROVED	GLEN WARD	3/07/14
	DUNG TRANG	3/07/14

NATIONAL AERONAUTICS AND SPACE ADMINISTRATION
JOHN F. KENNEDY SPACE CENTER, NASA
KENNEDY SPACE CENTER, FLORIDA

KSC LAUNCH PAD 39-B
ENVIRONMENTAL CONTROL SYSTEM (ECS) REFURBISHMENT

ELECTRICAL DETAILS AND ELEVATIONS DEMOLITION AND INSTALLATION

E-012

FILE NO.	SIZE	DWG.NO.	REV
	F	79K39602	

PCN. NO. 98898 SHEET 66 OF 187

NOTES:

1. THIS DRAWING SHOWS DESIGN INTENT ONLY. ACTUAL SIZE OF PANEL MAY CHANGE DEPENDING ON SOFT STARTER VFD MANUFACTURER.

2 FOR LOCATION SEE SHEET E-007.

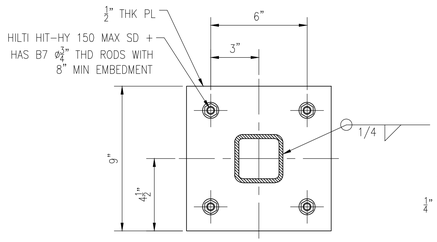

TYP BASE PLATE DETAIL
SCALE: 3"=1'-0"

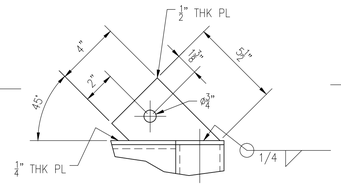

TYP LIFTING LUG DETAIL
SCALE: 3"=1'-0"

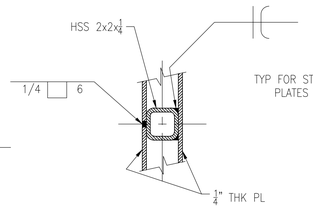

DETAIL 1
SCALE: 3"=1'-0"

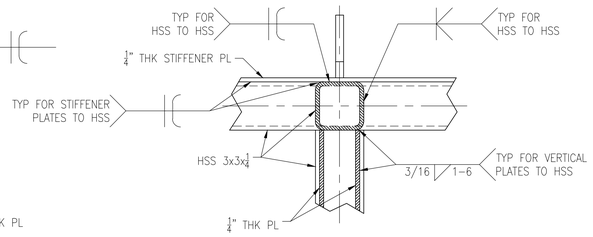

DETAIL 2
SCALE: 3"=1'-0"

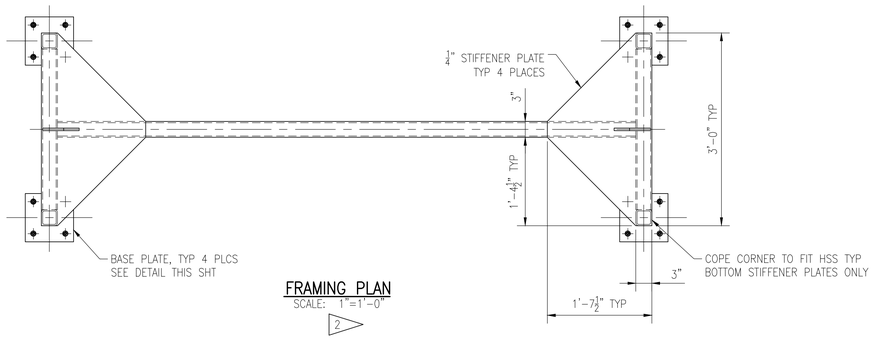

FRAMING PLAN
SCALE: 1"=1'-0"
2

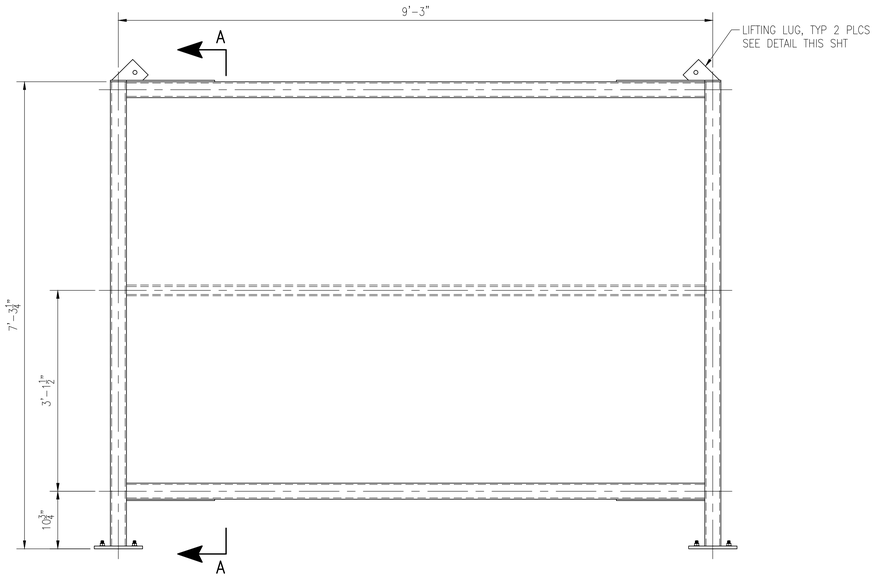

FRAMING ELEVATION
SCALE: 1"=1'-0"

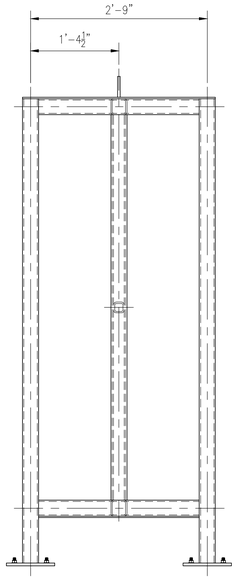

FRAMING END VIEW
SCALE: 1"=1'-0"

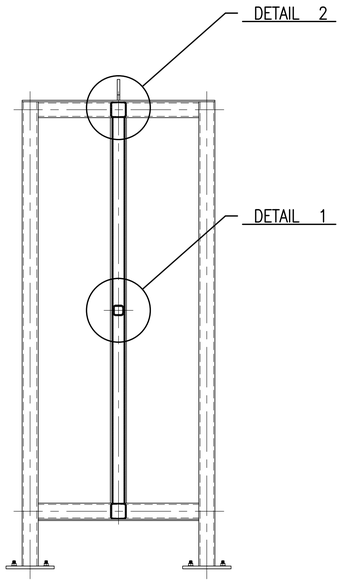

SECTION A-A
SCALE: 1"=1'-0"

SYM	ZONE	DESCRIPTION	DATE	APPROVED
		REVISIONS		

JACOBS
Jacobs Technology Inc.

SIGNATURES		DATE
DRAWN	MARTIN HENNIGH	3/07/14
CHECKED	JERRY HUNT	3/07/14
SUBMITTED	BRIAN GARLAND	3/07/14
ST OF LICENSURE: TN LICENSE NO: 00113330		
APPROVED	GLEN WARD	3/07/14
	DUNG TRANG	3/07/14

NATIONAL AERONAUTICS AND SPACE ADMINISTRATION
JOHN F. KENNEDY SPACE CENTER, NASA
KENNEDY SPACE CENTER, FLORIDA

KSC LAUNCH PAD 39-B
ENVIRONMENTAL CONTROL SYSTEM (ECS) REFURBISHMENT
ELECTRICAL EQUIPMENT RACK
FRAMING PLAN & ELEVATION

FILE NO.	SIZE	DWG.NO.	REV
	F	79K39602	
PCN. NO. 98898		SHEET 67 OF 187	

E-013

NOTES:

1. EXISTING LIGHTING IS SHOWN IN APPROXIMATE LOCATION. CONTRACTOR TO VERIFY FIELD CONDITIONS. RELOCATE FIXTURES BELOW NEW DUCTING. PROVIDE AND INSTALL NEW SUPPORTS TO AVOID INTERFERENCE WITH NEW DUCTING. EXISTING CONDUIT MAY BE REUSED. EXTEND OR MODIFY EXISTING CONDUIT AS NECESSARY. PROVIDE AND INSTALL NEW CONDUCTORS FOR ALL LIGHTING. CONDUIT SHALL BE ¾" AND CONDUCTORS SHALL BE #12 AWG.

2 FIXTURES MOUNTED BELOW DUCTING.

3 FIXTURES MOUNTED ABOVE DUCTING.

4 FT. FLUORESCENT LIGHT FIXTURE (TYP.)

1 E-014

2 E-014

N

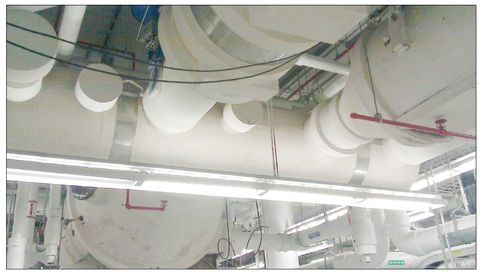

PIC 1
E-014

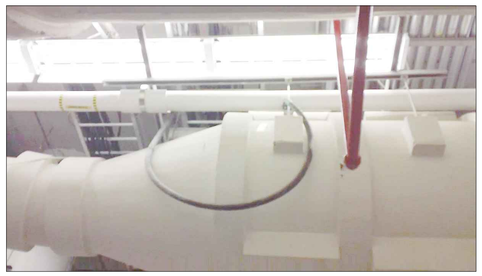

PIC 2
E-014

ECS ROOM LIGHTING PLAN
SCALE: 1/4"=1'-0"

SYM	ZONE	DESCRIPTION	DATE	APPROVED
REVISIONS				

JACOBS
Jacobs Technology Inc.

SIGNATURES		DATE
DRAWN	MARTIN HENNIGH	3/07/14
CHECKED	JERRY HUNT	3/07/14
SUBMITTED	BRIAN GARLAND	3/07/14
ST OF LICENSURE: TN LICENSE NO: 00113330		
APPROVED	GLEN WARD	3/07/14
	DUNG TRANG	3/07/14

NATIONAL AERONAUTICS AND SPACE ADMINISTRATION
JOHN F. KENNEDY SPACE CENTER, NASA
KENNEDY SPACE CENTER, FLORIDA

KSC LAUNCH PAD 39-B
ENVIRONMENTAL CONTROL SYSTEM (ECS) REFURBISHMENT

ECS ROOM LIGHTING SYSTEM LAYOUT INSTALLATION

FILE NO.	SIZE	DWG.NO.	REV
	F	79K39602	
PCN. NO. 98898		SHEET 68 OF 187	

E-014

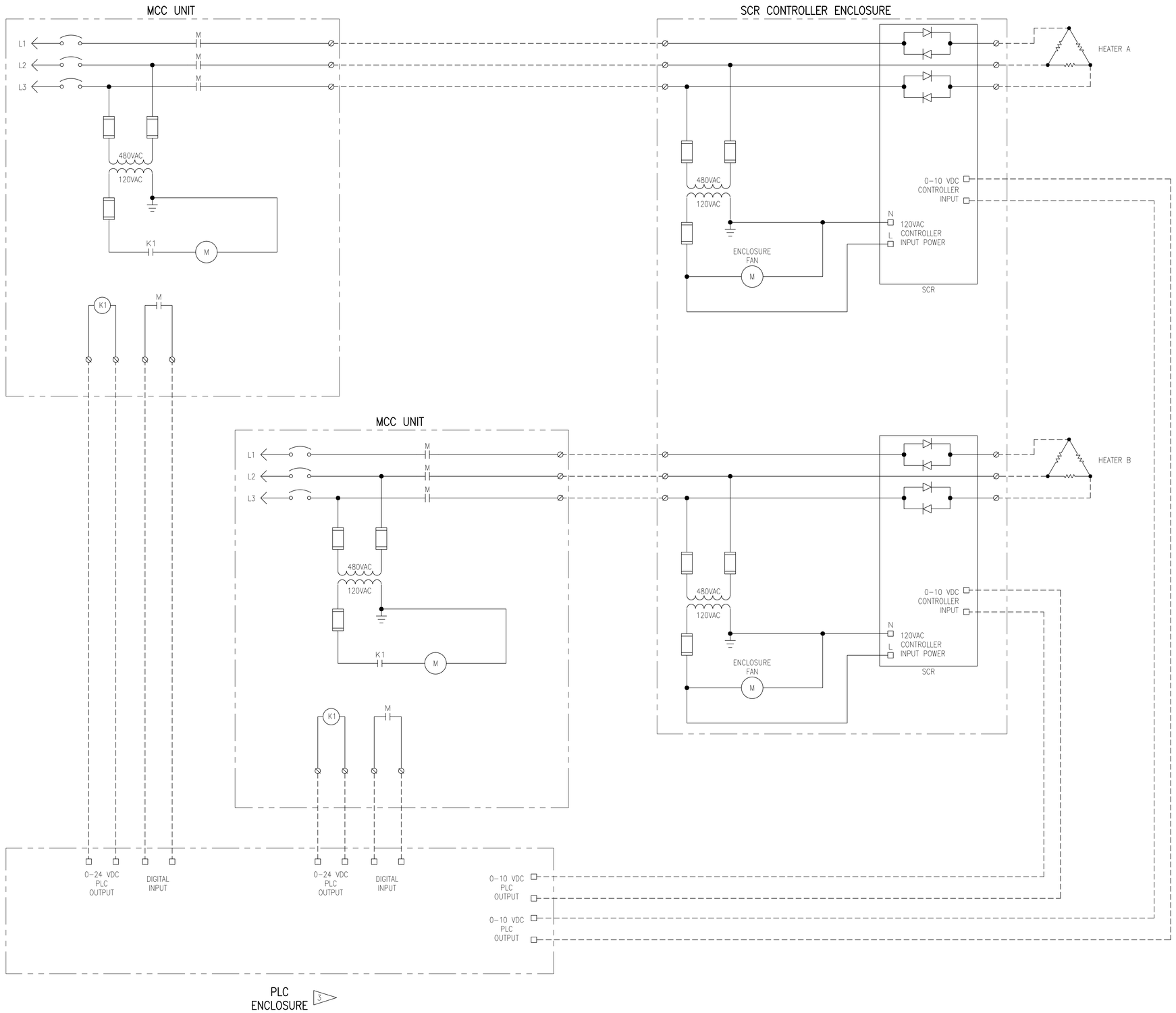

NOTES:

1. DASHED LINES INDICATE FIELD WIRING.
2. THIS SCHEMATIC IS FOR A TYPICAL HEATER SUPPLIED BY THE MCC AND SHOWS DESIGN INTENT ONLY. CONTRACTOR RESPONSIBLE FOR PROVIDING A WORKING SYSTEM. ACTUAL SCHEMATIC MAY VARY DEPENDING ON MANUFACTURER OF COMPONENTS. SEE SINGLE LINE DIAGRAM AND MCC SCHEDULE FOR ANY NEW REQUIRED MCC UNITS AND COMPONENTS.
3. SEE CONTROLS AND INSTRUMENTATION DRAWINGS FOR DETAILS.
4. PROVIDE AND INSTALL MULTIPLE ELECTRICAL SOURCES WARNING LABEL FOR EACH HEATER CONTROLLER ENCLOSURE. PROVIDE AND INSTALL A LABEL FOR EACH HEATER CONTROLLER ENCLOSURE INDICATING THE SOURCE OF POWER.

2 TYPICAL HEATER SCHEMATIC
SUPPLIED BY MCC

SYM	ZONE	DESCRIPTION	DATE	APPROVED
REVISIONS				

JACOBS
Jacobs Technology Inc.

SIGNATURES		DATE
DRAWN	MARTIN HENNIGH	3/07/14
CHECKED	JERRY HUNT	3/07/14
SUBMITTED	BRIAN GARLAND	3/07/14
ST OF LICENSURE: TN LICENSE NO: 00113330		
APPROVED	GLEN WARD	3/07/14
	DUNG TRANG	3/07/14

NATIONAL AERONAUTICS AND SPACE ADMINISTRATION
JOHN F. KENNEDY SPACE CENTER, NASA
KENNEDY SPACE CENTER, FLORIDA

KSC LAUNCH PAD 39-B
ENVIRONMENTAL CONTROL SYSTEM (ECS) REFURBISHMENT
ELECTRICAL SCHEMATICS
SHEET 1

FILE NO.	SIZE	DWG.NO.	REV
	F	79K39602	
PCN. NO. 98898		SHEET 69 OF 187	

E-015

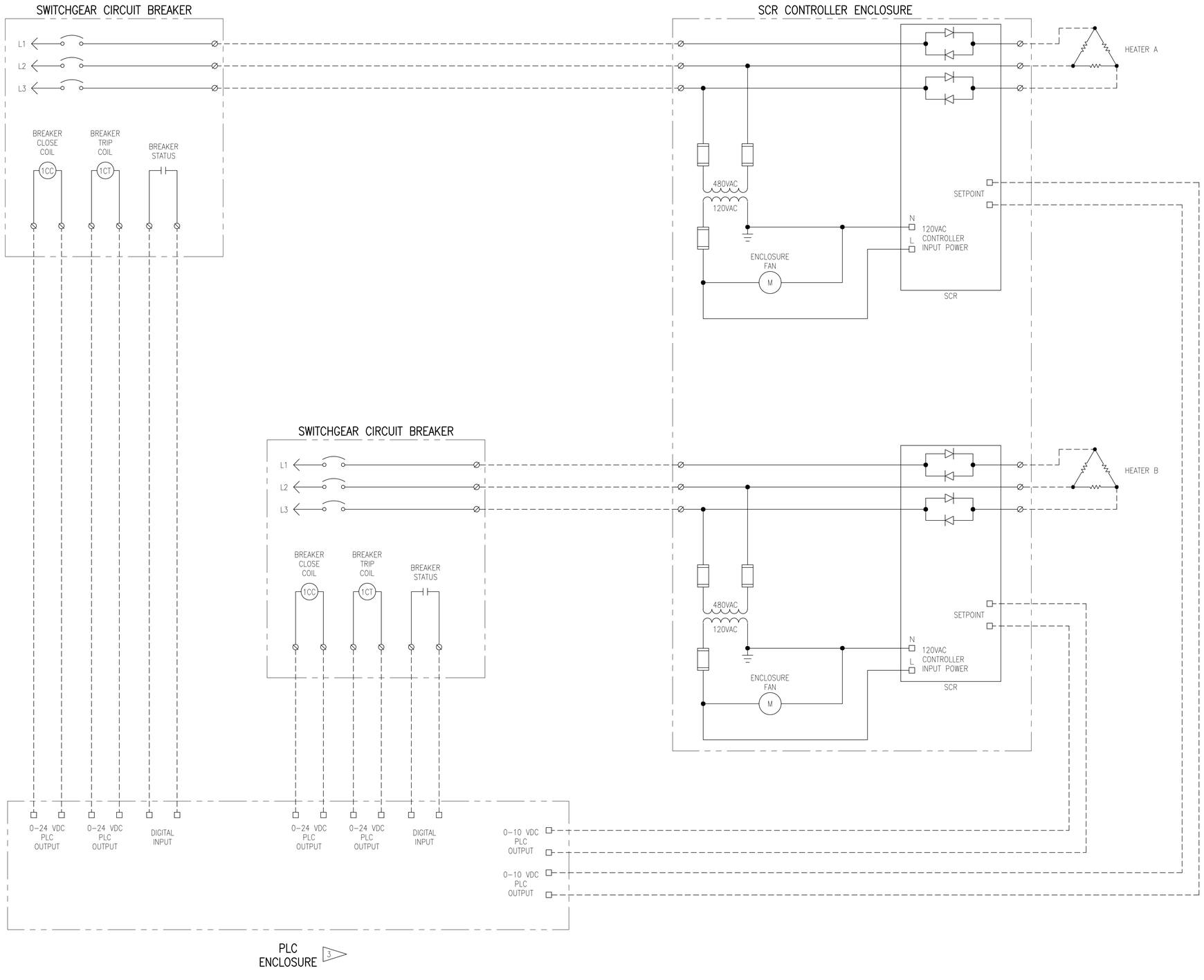

NOTES:

1. DASHED LINES INDICATE FIELD WIRING.
2. THIS SCHEMATIC IS FOR A TYPICAL HEATER SUPPLIED BY THE SWITCHGEAR AND SHOWS DESIGN INTENT ONLY. CONTRACTOR RESPONSIBLE FOR PROVIDING A WORKING SYSTEM. ACTUAL SCHEMATIC MAY VARY DEPENDING ON MANUFACTURER OF COMPONENTS. ALL SWITCHGEAR UNITS AND COMPONENTS ARE EXISTING.
3. SEE CONTROLS AND INSTRUMENTATION DRAWINGS FOR DETAILS.
4. PROVIDE AND INSTALL MULTIPLE ELECTRICAL SOURCES WARNING LABEL FOR EACH HEATER CONTROLLER ENCLOSURE. PROVIDE AND INSTALL A LABEL FOR EACH HEATER CONTROLLER ENCLOSURE INDICATING THE SOURCE OF POWER.

2 TYPICAL HEATER SCHEMATIC
SUPPLIED BY SWITCHGEAR

SYM	ZONE	DESCRIPTION	DATE	APPROVED
REVISIONS				

JACOBS
Jacobs Technology Inc.

SIGNATURES		DATE
DRAWN	MARTIN HENNIGH	3/07/14
CHECKED	JERRY HUNT	3/07/14
SUBMITTED	BRIAN GARLAND	3/07/14
ST OF LICENSURE: TN LICENSE NO: 00113330		
APPROVED	GLEN WARD	3/07/14
	DUNG TRANG	3/07/14

NATIONAL AERONAUTICS AND SPACE ADMINISTRATION
JOHN F. KENNEDY SPACE CENTER, NASA
KENNEDY SPACE CENTER, FLORIDA

KSC LAUNCH PAD 39-B
ENVIRONMENTAL CONTROL SYSTEM (ECS) REFURBISHMENT
ELECTRICAL SCHEMATICS
SHEET 2

FILE NO.	SIZE	DWG.NO.	REV
	F	79K39602	
PCN. NO. 98898		SHEET 70 OF 187	

E-016

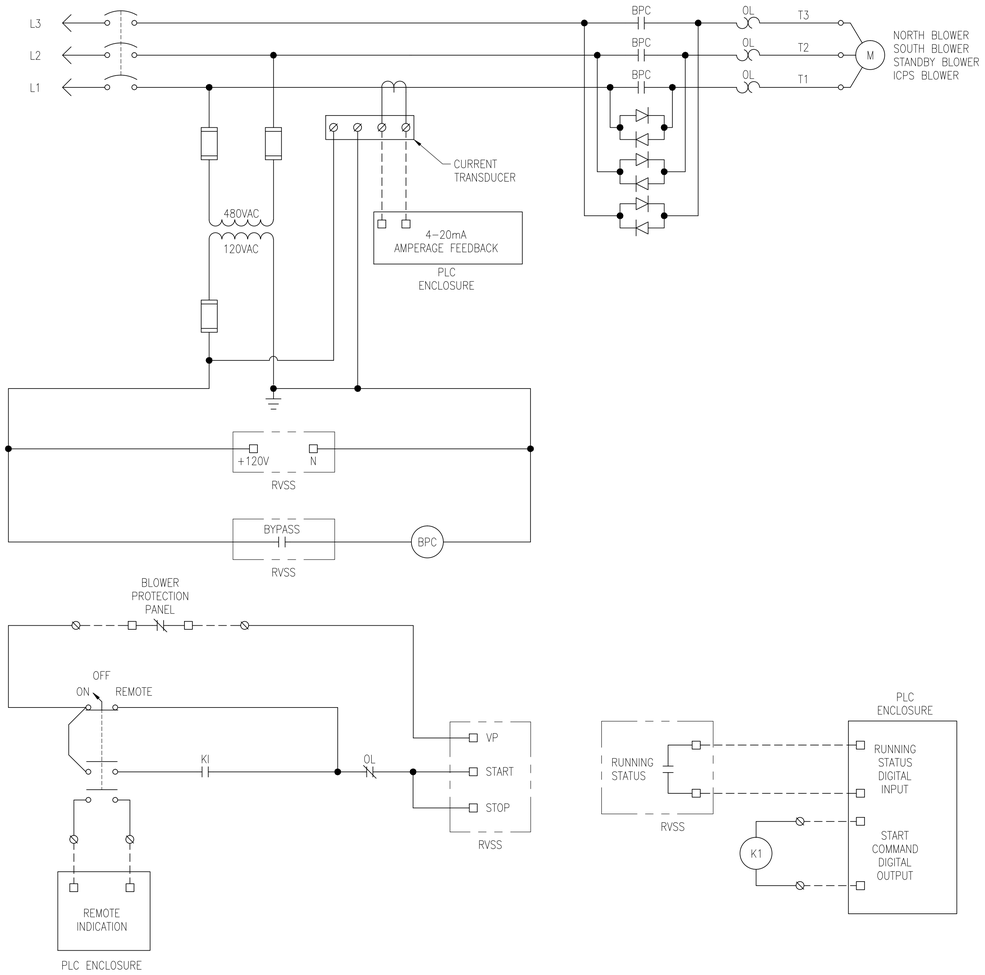

BLOWER STARTER
SCHEMATIC (TYPICAL)

NOTES:

1. DASHED LINES INDICATE FIELD WIRING.
2. THESE SCHEMATICS SHOW DESIGN INTENT ONLY. ACTUAL WIRING WILL DEPEND ON STARTER MANUFACTURER SELECTION.

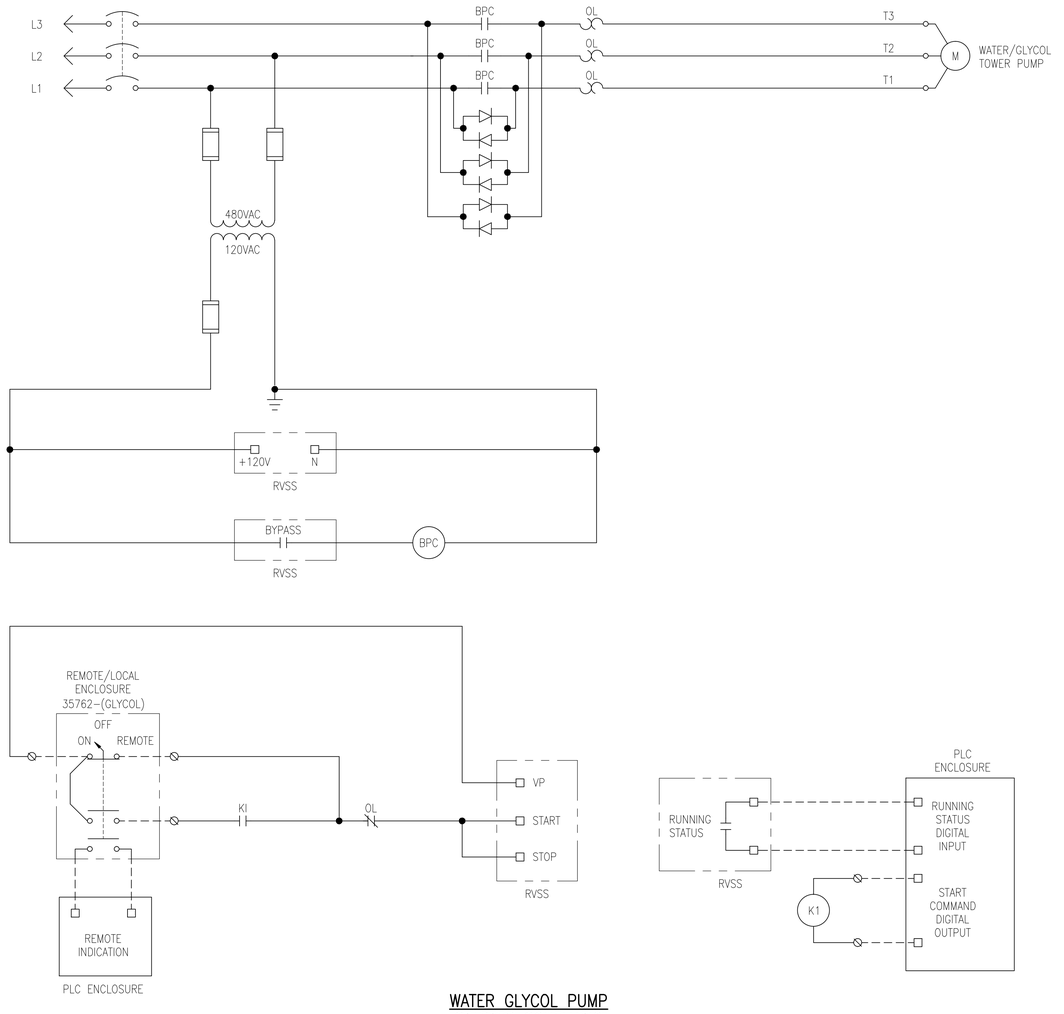

WATER GLYCOL PUMP
STARTER SCHEMATIC

SYM	ZONE	DESCRIPTION	DATE	APPROVED
REVISIONS				

JACOBS
Jacobs Technology Inc.

SIGNATURES	DATE
DRAWN MARTIN HENNIGH	3/07/14
CHECKED JERRY HUNT	3/07/14
SUBMITTED BRIAN GARLAND	3/07/14
ST OF LICENSURE: TN LICENSE NO: 00113330	
APPROVED GLEN WARD	3/07/14
DUNG TRANG	3/07/14

NATIONAL AERONAUTICS AND SPACE ADMINISTRATION
JOHN F. KENNEDY SPACE CENTER, NASA
KENNEDY SPACE CENTER, FLORIDA

KSC LAUNCH PAD 39-B
ENVIRONMENTAL CONTROL SYSTEM (ECS) REFURBISHMENT
ELECTRICAL SCHEMATICS
SHEET 3

FILE NO.	SIZE	DWG.NO.	REV
	F	79K39602	

PCN. NO. 98898 SHEET 71 OF 187

E-017

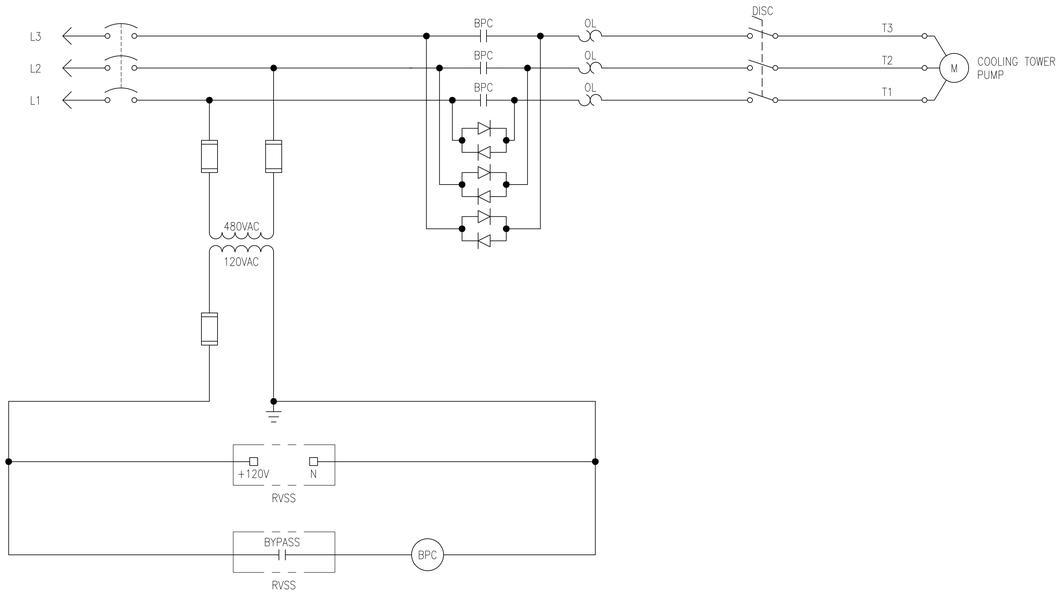

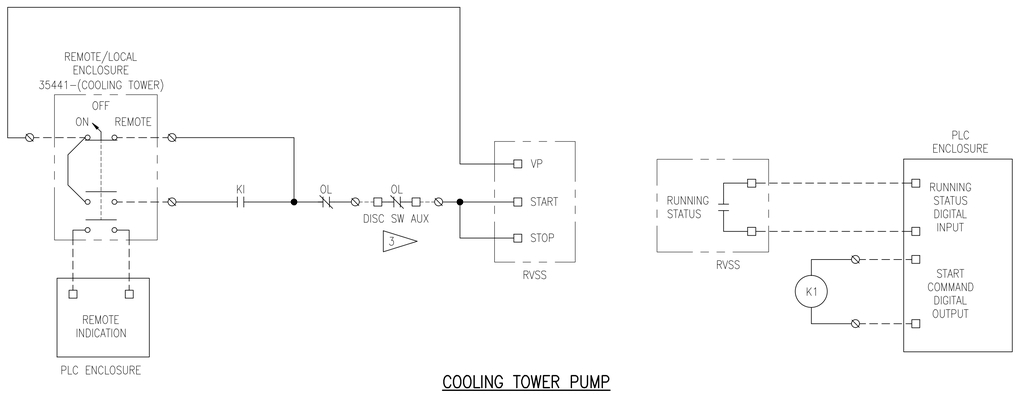

COOLING TOWER PUMP
STARTER SCHEMATIC

NOTES:

1. DASHED LINES INDICATE FIELD WIRING.
2. THESE SCHEMATICS SHOW DESIGN INTENT ONLY. ACTUAL WIRING WILL DEPEND ON STARTER MANUFACTURER SELECTION.

3 THIS AUXILIARY CONTACT SHALL BE PROVIDED AND INSTALLED WITH THE DISCONNECT SWITCH. THIS CONTACT SHALL DISABLE THE DRIVE BEFORE REMOVING POWER FROM THE MOTOR.

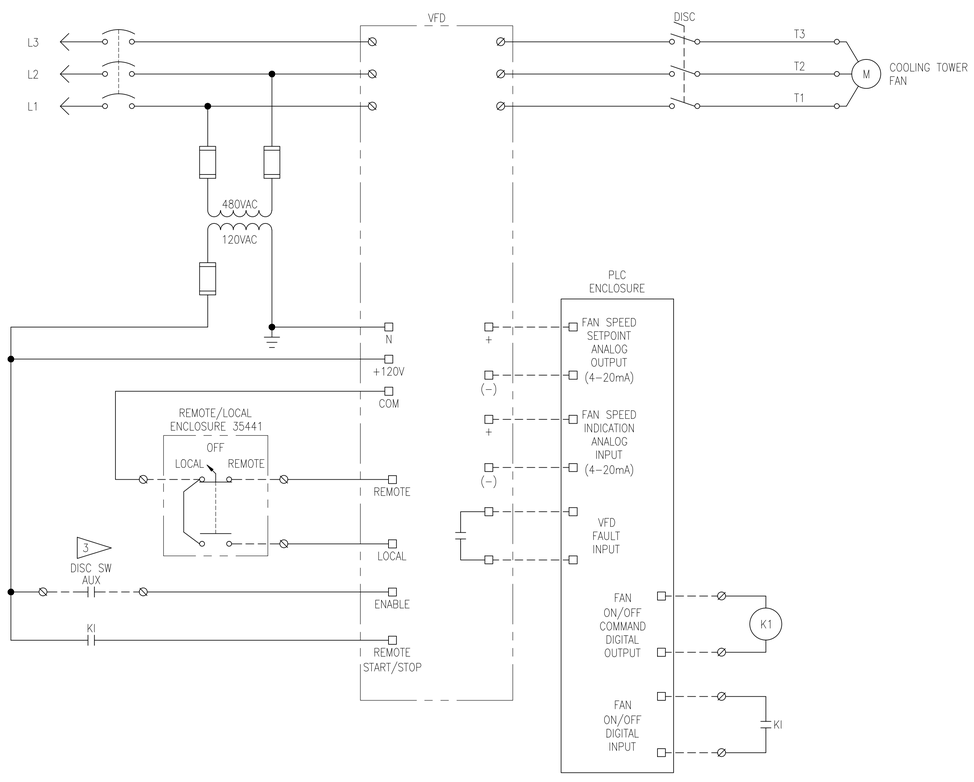

COOLING TOWER FAN
VFD SCHEMATIC

SYM	ZONE	DESCRIPTION	DATE	APPROVED
REVISIONS				

JACOBS
Jacobs Technology Inc.

SIGNATURES		DATE
DRAWN	MARTIN HENNIGH	3/07/14
CHECKED	JERRY HUNT	3/07/14
SUBMITTED	BRIAN GARLAND	3/07/14
ST OF LICENSURE: TN LICENSE NO: 00113330		
APPROVED	GLEN WARD	3/07/14
	DUNG TRANG	3/07/14

NATIONAL AERONAUTICS AND SPACE ADMINISTRATION
JOHN F. KENNEDY SPACE CENTER, NASA
KENNEDY SPACE CENTER, FLORIDA

KSC LAUNCH PAD 39-B
ENVIRONMENTAL CONTROL SYSTEM (ECS) REFURBISHMENT
ELECTRICAL SCHEMATICS
SHEET 4

E-018

FILE NO.	SIZE	DWG.NO.	REV
	F	79K39602	
PCN. NO. 98898		SHEET 72 OF 187	

DEMOLITION CONDUIT AND CABLE SCHEDULE

CABLE NO.	FROM	TO	CONDUCTOR	CONDUIT	CABLE TRAY DESIGNATOR	COMMENTS	DRAWING
A	ECS SWGR 1050A UNIT 2B	LPAC BLOWER 1 STARTER	3 #4/0, 1 #4	2" CONDUIT		CONDUIT TO REMAIN	E-002, E-006
B	LPAC BLOWER 1 STARTER	LPAC BLOWER 1	3 #4/0, 1 #4	2" CONDUIT		CONDUIT TO REMAIN	E-002, E-006
C	ECS SWGR 1050A UNIT 3A	SOUTH BLOWER STARTER	3 #750 KCMIL	4" CONDUIT	CT-D02; CT-D04		E-002, E-006
D	SOUTH BLOWER STARTER	SOUTH BLOWER	3 #750 KCMIL	4" CONDUIT			E-002, E-006
E	SOUTH BLOWER STARTER	SOUTH BLOWER OIL PUMP	4 #12	3/4" CONDUIT			E-002, E-006
F	ECS SWGR 1050A SECTIOIN 3B	PAYLOAD CHANGOUT HTR 1 CONROLLER	(2) 3 #500 KCIML	4" CONDUIT	CT-D02	2 SETS	E-002, E-006
G	PAYLOAD CHANGOUT HTR 1 CONROLLER	PAYLOAD CHANGOUT HTR 1	(2) 3 #500 KCIML	4" CONDUIT	CT-D06	2 SETS	E-002, E-006
H	CHILLER #1 DISC	CHILLER #1	3 #750 KCMIL	4" CONDUIT		CONDUIT TO REMAIN	E-002, E-006
J	ECS SWGR 1050A UNIT 4D	PAYLOAD BAY HTR 1 CONTROLLER	3 #4/0	4" CONDUIT	CT-D02		E-002, E-006
K	PAYLOAD BAY HTR 1 CONTROLLER	PAYLOAD BAY HTR 1	3 #4/0	4" CONDUIT	CT-D06		E-002, E-006
L	PANEL ECS BREAKER 27	STANDBY BLOWER STARTER	3 #750 KCMIL	4" CONDUIT	CT-D05		E-002, E-006
M	STANDBY BLOWER STARTER	STANDBY BLOWER	3 #750 KCMIL	4" CONDUIT			E-002, E-006
N	STANDBY BLOWER STARTER	STANDBY BLOWER OIL PUMP	4 #12	3/4" CONDUIT			E-002, E-006
P	CHILLER #2 DISC	CHILLER #2	3 #750 KCMIL	4" CONDUIT		CONDUIT TO REMAIN	E-002, E-006
R	ECS MCC-A UNIT 1D	COOLING TOWER PUMP 1 DISC	3 #4/0, 1 #6	2" CONDUIT	CT-D02; CT-D04; CT-D12		E-002, E-006, E-008
S	COOLING TOWER PUMP 1 DISC	COOLING TOWER PUMP 1	3 #4/0, 1 #6	2" CONDUIT			E-002, E-006, E-008
T	ECS MCC-A UNIT 1G	ET TPS HTR 1 CONTROLLER	3 #6	1" CONDUIT	CT-D02		E-002, E-006
U	ET TPS HTR 1 CONTROLLER	ET TPS HTR 1	3 #6	1" CONDUIT	CT-D06		E-002, E-006
V	ECS MCC-A UNIT 1M	AFT HTR 1 CONTROLLER	3 #2	1-1/2" CONDUIT	CT-D02		E-002, E-006
W	AFT HTR 1 CONTROLLER	AFT HTR 1	3 #2	1-1/2" CONDUIT	CT-D06		E-002, E-006
X	ECS MCC-A UNIT 2D	CABIN BLOWER 1	3 #8	1" CONDUIT	CT-D02; CT-D05		E-002, E-006
Y	ECS MCC-A UNIT 2F	ET/IT HTR 1 CONTROLLER	3 #8	1" CONDUIT	CT-D02		E-002, E-006
Z	ET/IT HTR 1 CONTROLLER	ET/IT HTR 1	3 #8	1" CONDUIT	CT-D06		E-002, E-006
AA	NOT USED						
AB	PANEL ECS BREAKER 03	ECS MCC-A UNIT 2H	3 #6, 1 #10	2" CONDUIT			E-002, E-006, E-008
AC	ECS MCC-A UNIT 2H	COOLING TOWER FAN 2 DISC	3 #6, 1 #10	2" CONDUIT	CT-D02; CT-D04; CT-D12		E-002, E-006, E-008
AC	ECS MCC-A UNIT 2H	COOLING TOWER FAN 2 DISC	3 #6, 1 #10	2" CONDUIT	CT-D02; CT-D04; CT-D12		E-002, E-006, E-008
AD	COOLING TOWER FAN 2 DISC	COOLING TOWER FAN 2	3 #6, 1 #10	3/4" CONDUIT			E-002, E-006, E-008
AE	ECS MCC-A UNIT 2K	COOLING TOWER FAN 1 DISC	3 #6, 1 #10	2" CONDUIT	CT-D02; CT-D04; CT-D12		E-002, E-006, E-008
AF	COOLING TOWER FAN 1 DISC	COOLING TOWER FAN 1	3 #6, 1 #10	3/4" CONDUIT			E-002, E-006, E-008
AG	ECS MCC-A UNIT 3C	NORTH STEAM BOILER DISC	3 #4/0, 1 #4	2" CONDUIT	CT-D02; CT-D05	CONDUIT FROM CABLE TRAY TO DISC TO REMAIN	E-002, E-006
AH	NORTH STEAM BOILER DISC	NORTH STEAM BOILER	3 #4/0, 1 #4	2" CONDUIT			E-002, E-006
AJ	ECS MCC-A UNIT 3E	CABIN HTR 1 CONTROLLER	3 #8, 1 #10	1" CONDUIT	CT-D02		E-002, E-006
AK	CABIN HTR 1 CONTROLLER	CABIN HTR 1	3 #8, 1 #10	1" CONDUIT	CT-D06		E-002, E-006
AL	ECS MCC-A UNIT 3J	LPAC HTR 1 CONTROLLER	3 #8, 1 #10	1" CONDUIT	CT-D02		E-002, E-006
AM	LPAC HTR 1 CONTROLLER	LPAC HTR 1	3 #8, 1 #10	1" CONDUIT	CT-D06		E-002, E-006
AN	ECS MCC-A UNIT 3M	WATER/GLYCOL PUMP 1	3 #2	1-1/2" CONDUIT	CT-D02; CT-D05; CT-D11		E-002, E-006
AP	ECS MCC-A UNIT 4F	FWD HTR 1 CONTROLLER	3 #6	1" CONDUIT	CT-D02		E-002, E-006
AR	FWD HTR 1 CONTROLLER	FWD HTR 1	3 #6	1" CONDUIT	CT-D06		E-002, E-006
AS	ECS MCC-A UNIT 4M	REGULATED POWER SUPPLY A	4 #12	1" CONDUIT	CT-D02; CT-D06		E-002, E-006
AT	ECS SWGR 1050B UNIT 2B	LPAC BLOWER 2 STARTER	3 #4/0, 1 #4	2" CONDUIT		CONDUIT TO REMAIN	E-003, E-006
AU	LPAC BLOWER 2 STARTER	LPAC BLOWER 2	3 #4/0, 1 #4	2" CONDUIT		CONDUIT TO REMAIN	E-003, E-006
AV	ECS SWGR 1050B UNIT 3A	NORTH BLOWER STARTER	3 #750 KCMIL	4" CONDUIT	CT-D02; CT-D04		E-003, E-006
AW	NORTH BLOWER STARTER	NORTH BLOWER	3 #750 KCMIL	4" CONDUIT			E-003, E-006
AX	NORTH BLOWER STARTER	NORTH BLOWER OIL PUMP	4 #12	3/4" CONDUIT			E-003, E-006
AY	ECS SWGR 1050B UNIT 3B	PAYLOAD CHANGOUT HTR 2 CONROLLER	3 #500 KCIML	4" CONDUIT	CT-D02		E-003, E-006
AZ	PAYLOAD CHANGOUT HTR 2 CONROLLER	PAYLOAD CHANGOUT 2 HTR	3 #500 KCIML	4" CONDUIT	CT-D06		E-003, E-006
BA	CHILLER #3 DISC	CHILLER #3	3 #750 KCMIL	4" CONDUIT		CONDUIT TO REMAIN	E-003, E-006
BB	ECS SWGR 1050B 4D	PAYLOAD BAY HTR 2 CONTROLLER	3 #4/0	4" CONDUIT	CT-D02		E-003, E-006
BC	PAYLOAD BAY HTR 2 CONTROLLER	PAYLOAD BAY HTR 2	3 #4/0	4" CONDUIT	CT-D06		E-003, E-006
BD	ECS MCC-B UNIT 1J	LPAC HTR 2 CONTROLLER	3 #6, 1 #10	3/4" CONDUIT	CT-D02		E-003, E-006
BE	LPAC HTR 2 CONTROLLER	LPAC HTR 2	3 #6, 1 #10	3/4" CONDUIT	CT-D06		E-003, E-006
BF	ECS MCC-B UNIT 1M	SOUTH STEAM BOILER DISC	3 #2	2" CONDUIT			E-003, E-006
BG	SOUTH STEAM BOILER DISC	SOUTH STEAM BOILER	3 #2	2" CONDUIT			E-003, E-006
BH	ECS MCC-B UNIT 2B	ET/IT HTR 2 CONTROLLER	3 #6	1" CONDUIT	CT-D02		E-003, E-006
BJ	ET/IT HTR 2 CONTROLLER	ET/IT HTR 2	3 #6	1" CONDUIT	CT-D06		E-003, E-006
BK	ECS MCC-B UNIT 2M	COOLING TOWER FAN 3 DISC	3 #6	2" CONDUIT	CT-D02; CT-D04; CT-D12		E-003, E-006, E-008
BL	COOLING TOWER FAN 3 DISC	COOLING TOWER FAN 3	3 #6	1" CONDUIT			E-003, E-006, E-008
BM	ECS MCC-B UNIT 3B	CABIN BLOWER 2	3 #8	1" CONDUIT	CT-D02; CT-D05		E-003, E-006
BN	ECS MCC-B UNIT 3D	CABIN HEATER 2 CONTROLLER	3 #8	1" CONDUIT	CT-D02		E-003, E-006
BP	CABIN HEATER 2 CONTROLLER	CABIN HEATER 2	3 #8	1" CONDUIT	CT-D06		E-003, E-006
BR	ECS MCC-B UNIT 3J	WATER/GLYCOL PUMP 2	3 #2	CABLE TRAY	CT-D02; CT-D05; CT-D11		E-003, E-006
BS	ECS MCC-B UNIT 3M	FWD HTR 2 CONTROLLER	3 #8	3/4" CONDUIT	CT-D02		E-003, E-006
BT	FWD HTR 2 CONTROLLER	FWD HTR 2	3 #8	3/4" CONDUIT	CT-D06		E-003, E-006
BU	ECS MCC-B UNIT 4M	AFT HTR 2 CONTROLLER	3 #2	CABLE TRAY	CT-D02		E-003, E-006
BV	AFT HTR 2 CONTROLLER	AFT HTR 2	3 #2	CABLE TRAY	CT-D06		E-003, E-006
BW	ECS MCC-B UNIT 4G	ET TPS HTR 2 CONTROLLER	3 #8	CABLE TRAY	CT-D02		E-003, E-006
BX	ET TPS HTR 2 CONTROLLER	ET TPS HTR 2	3 #8	CABLE TRAY	CT-D06		E-003, E-006
BY	ECS MCC-B UNIT 4M	REGULATED POWER SUPPLY B	4 #12	1" CONDUIT			E-003, E-006
BZ	ECS MCC-B UNIT E1	COOLING TOWER PUMP 2 DISC	3 #4/0, 1 #6	2" CONDUIT	CT-D02; CT-D04; CT-D12		E-003, E-006, E-008
CA	COOLING TOWER PUMP 2 DISC	COOLING TOWER PUMP 2	3 #4/0, 1 #6	2" CONDUIT			E-003, E-006, E-008

SYM	ZONE	DESCRIPTION	DATE	APPROVED
REVISIONS				

JACOBS
Jacobs Technology Inc.

SIGNATURES	DATE
DRAWN MARTIN HENNIGH	3/07/14
CHECKED JERRY HUNT	3/07/14
SUBMITTED BRIAN GARLAND	3/07/14
ST OF LICENSURE: TN LICENSE NO: 00113330	
APPROVED GLEN WARD	3/07/14
DUNG TRANG	3/07/14

NATIONAL AERONAUTICS AND SPACE ADMINISTRATION
JOHN F. KENNEDY SPACE CENTER, NASA
KENNEDY SPACE CENTER, FLORIDA

KSC LAUNCH PAD 39-B
ENVIRONMENTAL CONTROL SYSTEM (ECS) REFURBISHMENT
ELECTRICAL SCHEDULES
DEMOLITION

E-019

FILE NO.	SIZE	DWG.NO.	REV
	F	79K39602	

PCN. NO. 98898 SHEET 73 OF 187

INSTALLATION CONDUIT AND CABLE SCHEDULE

CABLE NO.	FROM	TO	CONDUCTOR	CONDUIT	CABLE TRAY DESIGNATOR	COMMENTS	SHEET
1	ECS SWGR 1050A UNIT 2B	ICPS BLOWER #1 STARTER	3 #3/0, 1 #3	2" CONDUIT		REUSE EXISTING CONDUIT	E-004, E-007
2	ICPS BLOWER #1 STARTER	ICPS BLOWER #1	3 #3/0, 1 #3	2" CONDUIT		REUSE EXISTING CONDUIT	E-004, E-007
3	ECS SWGR 1050A UNIT 3A	SOUTH BLOWER STARTER	3 #750 KCMIL, 1 #2/0	4" CONDUIT	CT-D02; CT-D04		E-004, E-007
4	SOUTH BLOWER STARTER	SOUTH BLOWER	3 #750 KCMIL, 1 #2/0	4" CONDUIT			E-004, E-007
5	NOT USED						
6	ECS SWGR 1050A UNIT 3B	CIRCUIT 7-N HTR CONTROLLER CS/AFT ENCL	3 #350 KCMIL, 1 #4	3" CONDUIT			E-004, E-007
7	CIRCUIT 7-N HTR CONTROLLER CS/AFT ENCL	CIRCUIT 7-N CS/AFT HTR A	3 #350 KCMIL, 1 #4	3" CONDUIT			E-004, E-007
8	CHILLER #1 DISCONNECT	CHILLER #1	3 #750 KCMIL	4" CONDUIT		REUSE EXISTING CONDUIT	E-004, E-007
9	ECS SWGR 1050A UNIT 4B	CIRCUIT 3-I HTR CONTROLLER ICPS ENCL	1-3C #3/0 W/ #6 GND	2-1/2" CONDUIT	CT-D02E		E-004, E-007
10	CIRCUIT 3-I HTR CONTROLLER ICPS ENCL	CIRCUIT 3-I ICPS HTR A	1-3C #3/0 W/ #6 GND	2-1/2" CONDUIT	CT-D02; CT-D06		E-004, E-007
11	ECS SWGR 1050A UNIT 4D	CIRCUIT 6-N HTR CONTROLLER CS/IT ENCL	1-3C #3/0 W/ #6 GND	2-1/2" CONDUIT	CT-D02E		E-004, E-007
12	CIRCUIT 6-N HTR CONTROLLER CS/IT ENCL	CIRCUIT 6-N CS/IT HTR A	1-3C #3/0 W/ #6 GND	2-1/2" CONDUIT	CT-D02; CT-D06		E-004, E-007
13	PANEL ECS CB 27	STANDBY BLOWER STARTER	3 #750 KCMIL, 1 #2/0	4" CONDUIT	CT-D05		E-004, E-007
14	STANDBY BLOWER STARTER	STANDBY BLOWER	3 #750 KCMIL, 1 #2/0	4" CONDUIT			E-004, E-007
15	NOT USED						
16	CHILLER #2 DISCONNECT	CHILLER #2	3 #750 KCMIL	4" CONDUIT		REUSE EXISTING CONDUIT	E-004, E-007
17	ECS MCC-A UNIT 2K	CIRCUIT 2-N HTR CONTROLLER CS/FS ENCL	1-3C #2/0 W/ #6 GND	2" CONDUIT	CT-D02E		E-004, E-007
18	CIRCUIT 2-N HTR CONTROLLER CS/FS ENCL	CIRCUIT 2-N CS/FS HTR B	1-3C #2/0 W/ #6 GND	2" CONDUIT	CT-D02; CT-D06		E-004, E-007
19	ECS MCC-A UNIT 1G	CIRCUIT 12-S HTR CONTROLLER LAS ENCL	1-3C #2 W/ #8 GND	1-1/2" CONDUIT	CT-D02E		E-004, E-007
20	CIRCUIT 12-S HTR CONTROLLER LAS ENCL	CIRCUIT 12-S LAS HTR B	1-3C #2 W/ #8 GND	1-1/2" CONDUIT	CT-D02; CT-D06		E-004, E-007
21	ECS MCC-A UNIT 1M	CIRCUIT 1-N HTR CONTROLLER SM ENCL	1-3C #2 W/ #6 GND	2" CONDUIT	CT-D02E		E-004, E-007
22	CIRCUIT 1-N HTR CONTROLLER SM ENCL	CIRCUIT 1-N SM HTR B	1-3C #2 W/ #6 GND	2" CONDUIT	CT-D02; CT-D06		E-004, E-007
23	ECS MCC-A UNIT 1D	CIRCUIT 9-S HTR CONTROLLER SPARE ENCL	1-3C #1/0 W/ #6 GND	2" CONDUIT	CT-D02E		E-004, E-007
24	CIRCUIT 9-S HTR CONTROLLER SPARE ENCL	CIRCUIT 9-S SPARE 2 HTR A	1-3C #1/0 W/ #6 GND	2" CONDUIT	CT-D02; CT-D06		E-004, E-007
25	ECS MCC-A UNIT 2B	COOLING TOWER FAN #1 VFD	1-3C #8 W/ #10 GND	1-1/4" CONDUIT	CT-D02; CT-D04		E-004, E-007
26	COOLING TOWER FAN #1 VFD	COOLING TOWER FAN #1 DISC	1-3C #8 W/ #10 GND 1-2C #14 W/ #14 GND	1-1/4" CONDUIT	CT-D04; CT-D12	USE SHIELDED VFD CABLE; #14 IS FOR VFD CONTROL	E-004, E-007, E-009, E-018
26A	COOLING TOWER FAN #1 VFD	COOLING TOWER REM/LOCAL 35441	1-3C #14 W/ #14 GND	3/4" CONDUIT	CT-D04; CT-D12		E-007, E-009, E-018
27	COOLING TOWER FAN #1 DISC	COOLING TOWER FAN #1	1-3C #8 W/ #10 GND	1-1/4" CONDUIT		USE SHIELDED VFD CABLE	E-009
28	NOT USED						
29	ECS MCC-A UNIT 3C	CIRCUIT 10-S HTR CONTROLLER SPARE ENCL	1-3C #1/0 W/ #6 GND	2" CONDUIT	CT-D02E		E-004, E-007
30	CIRCUIT 10-S HTR CONTROLLER SPARE ENCL	CIRCUIT 10-S SPARE 3 HTR B	1-3C #1/0 W/ #6 GND	2" CONDUIT	CT-D02; CT-D06		E-004, E-007
31	ECS MCC-A UNIT 3GL	WATER/GLYCOL PUMP #1 STARTER	1-3C #2 W/ #8 GND	1-1/2" CONDUIT	CT-D02; CT-D05; CT-D11		E-004, E-007
32	WATER/GLYCOL PUMP #1 STARTER	WATER/GLYCOL PUMP #1	1-3C #2 W/ #8 GND	1-1/2" CONDUIT			E-004, E-007
32A	WATER/GLYCOL PUMP #1 STARTER	WATER/GLYCOL REM/LOCAL 35762	1-3C #14 W/ #14 GND	3/4" CONDUIT			E-007, E-017
33	ECS MCC-A UNIT 3GR	COOLING TOWER PUMP #1 STARTER	1-3C #1 W/ #6 GND	2" CONDUIT	CT-D02; CT-D04		E-004, E-007
34	COOLING TOWER PUMP #1 STARTER	COOLING TOWER PUMP #1 DISC	1-3C #1 W/ #6 GND 1-2C #14 W/ #14 GND	2" CONDUIT	CT-D04; CT-D12		E-004, E-007, E-009, E-018
34A	COOLING TOWER PUMP #1 STARTER	COOLING TOWER REM/LOCAL 35441	1-3C #14 W/ #14 GND	3/4" CONDUIT	CT-D04; CT-D12		E-007, E-009, E-018
35	COOLING TOWER PUMP #1 DISC	COOLING TOWER PUMP #1	1-3C #1 W/ #6 GND	2" CONDUIT			E-004, E-009
36	ECS MCC-A UNIT 3J	NORTH STEAM BOILER DISC	1-3C #4 W/ #8 GND	1-1/4" CONDUIT	CT-D02; CT-D05		E-004, E-007
37	NORTH STEAM BOILER DISC	NORTH STEAM BOILER	1-3C #4 W/ #8 GND	1-1/4" CONDUIT			E-004, E-007
38	ECS MCC-A UNIT 3M	CIRCUIT 5-N HTR CONTROLLER SPARE ENCL	1-3C #4 W/ #8 GND	1-1/4" CONDUIT	CT-D02E		E-004, E-007
39	CIRCUIT 5-N HTR CONTROLLER SPARE ENCL	CIRCUIT 5-N SPARE HTR A	1-3C #4 W/ #8 GND	1-1/4" CONDUIT	CT-D02; CT-D06		E-004, E-007
40	ECS MCC-A UNIT 4C	CIRCUIT 8-S HTR CONTROLLER CS/ENG ENCL	1-3C #1/0 W/ #6 GND	2" CONDUIT	CT-D02E		E-004, E-007
41	CIRCUIT 8-S HTR CONTROLLER CS/ENG ENCL	CIRCUIT 8-S CS/ENG HTR B	1-3C #1/0 W/ #6 GND	2" CONDUIT	CT-D02; CT-D06		E-004, E-007
42	ECS MCC-A UNIT 4F	CIRCUIT 11-S HTR CONTROLLER EC/CC ENCL	1-3C #2 W/ #8 GND	1-1/2" CONDUIT	CT-D02E		E-004, E-007
43	CIRCUIT 11-S HTR CONTROLLER EC/CC ENCL	CIRCUIT 11-S EC/CC HTR B	1-3C #2 W/ #8 GND	1-1/2" CONDUIT	CT-D02; CT-D06		E-004, E-007
44	ECS MCC-A UNIT 4H	CIRCUIT 4-I HTR CONTROLLER SPARE 4 ENCL	1-3C #8 W/ #10 GND	1-1/4" CONDUIT	CT-D02E		E-004, E-007
45	CIRCUIT 4-I HTR CONTROLLER SPARE 4 ENCL	CIRCUIT 4-I SPARE 4 HTR B	1-3C #8 W/ #10 GND	1-1/4" CONDUIT	CT-D02; CT-D06		E-004, E-007
46	ECS SWGR 1050B UNIT 2B	ICPS BLOWER #2 STARTER	3 #3/0, 1 #3	2" CONDUIT		REUSE EXISTING CONDUIT	E-005, E-007
47	ICPS BLOWER #2 STARTER	ICPS BLOWER #2	3 #3/0, 1 #3	2" CONDUIT		REUSE EXISTING CONDUIT	E-005, E-007
48	ECS SWGR 1050B UNIT 3A	NORTH BLOWER STARTER	3 #750 KCMIL, 1 #2/0	4" CONDUIT	CT-D02; CT-D04		E-005, E-007
49	NORTH BLOWER STARTER	NORTH BLOWER	3 #750 KCMIL, 1 #2/0	4" CONDUIT			E-005, E-007
50	NOT USED						
51	ECS SWGR 1050B UNIT 3B	CIRCUIT 7-N HTR CONTROLLER CS/AFT ENCL	3 #350 KCMIL, 1 #4	3" CONDUIT			E-005, E-007
52	CIRCUIT 7-N HTR CONTROLLER CS/AFT ENCL	CIRCUIT 7-N CS/AFT HTR B	3 #350 KCMIL, 1 #4	3" CONDUIT			E-005, E-007
53	CHILLER #3 DISCONNECT	CHILLER #3	3 #750 KCMIL	4" CONDUIT		REUSE EXISTING CONDUIT	E-005, E-007
54	ECS SWGR 1050B UNIT 4B	CIRCUIT 3-I HTR CONTROLLER ICPS ENCL	1-3C #3/0 W/ #6 GND	2-1/2" CONDUIT	CT-D02E		E-005, E-007
55	CIRCUIT 3-I HTR CONTROLLER ICPS ENCL	CIRCUIT 3-I ICPS HTR B	1-3C #3/0 W/ #6 GND	2-1/2" CONDUIT	CT-D02; CT-D06		E-005, E-007
56	ECS SWGR 1050B UNIT 4D	CIRCUIT 6-N HTR CONTROLLER CS/IT ENCL	1-3C #3/0 W/ #6 GND	2-1/2" CONDUIT	CT-D02E		E-005, E-007
57	CIRCUIT 6-N HTR CONTROLLER CS/IT ENCL	CIRCUIT 6-N CS/IT HTR B	1-3C #3/0 W/ #6 GND	2-1/2" CONDUIT	CT-D02; CT-D06		E-005, E-007
58	ECS MCC-B UNIT 1G	CIRCUIT 8-S HTR CONTROLLER CS/ENG ENCL	1-3C #1/0 W/ #6 GND	2" CONDUIT	CT-D02E		E-005, E-007
59	CIRCUIT 8-S HTR CONTROLLER CS/ENG ENCL	CIRCUIT 8-S CS/ENG HTR A	1-3C #1/0 W/ #6 GND	2" CONDUIT	CT-D02; CT-D06		E-005, E-007
60	ECS MCC-B UNIT 1J	SOUTH STEAM BOILER DISC	3 #4, 1 #8	1-1/4" CONDUIT		REUSE EXISTING CONDUIT	E-005, E-007
61	SOUTH STEAM BOILER DISC	SOUTH STEAM BOILER	3 #4, 1 #8	1-1/4" CONDUIT			E-005, E-007
62	ECS MCC-B UNIT 1M	CIRCUIT 10-S HTR CONTROLLER SPARE ENCL	1-3C #1/0 W/ #6 GND	2" CONDUIT	CT-D02E		E-005, E-007
63	CIRCUIT 10-S HTR CONTROLLER SPARE ENCL	CIRCUIT 10-S SPARE 3 HTR A	1-3C #1/0 W/ #6 GND	2" CONDUIT	CT-D02; CT-D06		E-005, E-007
64	ECS MCC-B UNIT 5D	CIRCUIT 9-S HTR CONTROLLER SPARE ENCL	1-3C #1/0 W/ #6 GND	2" CONDUIT	CT-D02E		E-005, E-007
65	CIRCUIT 9-S HTR CONTROLLER SPARE ENCL	CIRCUIT 9-S SPARE 2 HTR A	1-3C #1/0 W/ #6 GND	2" CONDUIT	CT-D02; CT-D06		E-005, E-007
66	NOT USED						
67	NOT USED						
68	ECS MCC-B UNIT 3FL	WATER/GLYCOL PUMP #2 STARTER	1-3C #2 W/ #8 GND	1-1/2" CONDUIT	CT-D02; CT-D05; CT-D11		E-005, E-007
69	WATER/GLYCOL PUMP #2 STARTER	WATER/GLYCOL PUMP #2	1-3C #2 W/ #8 GND	1-1/2" CONDUIT			E-005, E-007
69A	WATER/GLYCOL PUMP #2 STARTER	WATER/GLYCOL REM/LOCAL 35762	1-3C #14 W/ #14 GND	3/4" CONDUIT			E-007, E-017
70	ECS MCC-B UNIT 3FR	COOLING TOWER PUMP #2 STARTER	1-3C #1 W/ #6 GND	2" CONDUIT	CT-D02; CT-D04; CT-D12		E-004, E-007
71	COOLING TOWER PUMP #2 STARTER	COOLING TOWER PUMP #2 DISC	1-3C #1 W/ #6 GND 1-2C #14 W/ #14 GND	2" CONDUIT	CT-D04; CT-D12		E-004, E-007, E-009, E-018
71A	COOLING TOWER PUMP #2 STARTER	COOLING TOWER REM/LOCAL 35441	1-3C #14 W/ #14 GND	3/4" CONDUIT	CT-D04; CT-D12		E-007, E-009, E-018
72	COOLING TOWER PUMP #2 DISC	COOLING TOWER PUMP #2	1-3C #1 W/ #6 GND	2" CONDUIT			E-004, E-009

INSTALLATION CONDUIT AND CABLE SCHEDULE (CONTINUED)

CABLE NO.	FROM	TO	CONDUCTOR	CONDUIT	CABLE TRAY DESIGNATOR	COMMENTS	SHEET
73	ECS MCC-B UNIT 3J	CIRCUIT 12-S HTR CONTROLLER LAS ENCL	1-3C #2 W/ #8 GND	1-1/2" CONDUIT	CT-D02E		E-004, E-007
74	CIRCUIT 12-S HTR CONTROLLER LAS ENCL	CIRCUIT 12-S LAS HTR A	1-3C #2 W/ #8 GND	1-1/2" CONDUIT	CT-D02; CT-D06		E-004, E-007
75	ECS MCC-B UNIT 3M	CIRCUIT 11-S HTR CONTROLLER EC/CC ENCL	1-3C #2 W/ #8 GND	1-1/2" CONDUIT	CT-D02E		E-004, E-007
76	CIRCUIT 11-S HTR CONTROLLER EC/CC ENCL	CIRCUIT 11-S EC/CC HTR B	1-3C #2 W/ #8 GND	1-1/2" CONDUIT	CT-D02; CT-D06		E-004, E-007
77	ECS MCC-B UNIT 4D	CIRCUIT 1-N HTR CONTROLLER SM ENCL	1-3C #2 W/ #6 GND	2" CONDUIT	CT-D02E		E-004, E-007
78	CIRCUIT 1-N HTR CONTROLLER SM ENCL	CIRCUIT 1-N SM HTR A	1-3C #2 W/ #6 GND	2" CONDUIT	CT-D02; CT-D06		E-004, E-007
79	ECS MCC-B UNIT 4G	CIRCUIT 5-N HTR CONTROLLER SPARE ENCL	1-3C #4 W/ #8 GND	1-1/4" CONDUIT	CT-D02E		E-004, E-007
80	CIRCUIT 5-N HTR CONTROLLER SPARE ENCL	CIRCUIT 5-N SPARE HTR B	1-3C #4 W/ #8 GND	1-1/4" CONDUIT	CT-D02; CT-D06		E-004, E-007
81	ECS MCC-B UNIT 2F	CIRCUIT 2-N HTR CONTROLLER CS/FS ENCL	1-3C #2/0 W/ #6 GND	2" CONDUIT	CT-D02E		E-004, E-007
82	CIRCUIT 2-N HTR CONTROLLER CS/FS ENCL	CIRCUIT 2-N CS/FS HTR A	1-3C #2/0 W/ #6 GND	2" CONDUIT	CT-D02; CT-D06		E-004, E-007
83	ECS MCC-B UNIT 5F	CIRCUIT 4-I HTR CONTROLLER SPARE 4 ENCL	1-3C #8 W/ #10 GND	1-1/4" CONDUIT	CT-D02E		E-004, E-007
84	CIRCUIT 4-I HTR CONTROLLER SPARE 4 ENCL	CIRCUIT 4-I SPARE 4 HTR B	1-3C #8 W/ #10 GND	1-1/4" CONDUIT	CT-D02; CT-D06		E-004, E-007
85	ECS MCC-A UNIT 4M	REGULATED POWER SUPPLY A	1-3C #12 W/ #12 GND	3/4" CONDUIT	CT-D02		E-004, E-007
86	ECS MCC-A UNIT 4M	REGULATED POWER SUPPLY B	1-3C #12 W/ #12 GND	3/4" CONDUIT	CT-D02		E-005, E-007
87	PANEL ECS CB 03	COOLING TOWER FAN #2 VFD	1-3C #8 W/ #10 GND	1-1/4" CONDUIT	CT-D02; CT-D04		E-004, E-007
88	COOLING TOWER FAN #2 VFD	COOLING TOWER FAN #2 DISC	1-3C #8 W/ #10 GND 1-2C #14 W/ #14 GND	1-1/4" CONDUIT	CT-D04; CT-D12	USE SHIELDED VFD CABLE; #14 IS FOR VFD CONTROL	E-004, E-007, E-009, E-018
88A	COOLING TOWER FAN #2 VFD	COOLING TOWER REM/LOCAL 35441	1-3C #14 W/ #14 GND	3/4" CONDUIT	CT-D04; CT-D12		E-007, E-009, E-018
89	COOLING TOWER FAN #2 DISC	COOLING TOWER FAN #2	1-3C #8 W/ #10 GND	1-1/4" CONDUIT		USE SHIELDED VFD CABLE	E-009
90	ECS MCC-B UNIT 2K	COOLING TOWER FAN #3 VFD	1-3C #8 W/ #10 GND	1-1/4" CONDUIT	CT-D02; CT-D04		E-004, E-007
91	COOLING TOWER FAN #3 VFD	COOLING TOWER FAN #3 DISC	1-3C #8 W/ #10 GND 1-2C #14 W/ #14 GND	1-1/4" CONDUIT	CT-D04; CT-D12	USE SHIELDED VFD CABLE; #14 IS FOR VFD CONTROL	E-004, E-007, E-009, E-018
91A	COOLING TOWER FAN #3 VFD	COOLING TOWER REM/LOCAL 35441	1-3C #14 W/ #14 GND	3/4" CONDUIT	CT-D04; CT-D12		E-007, E-009, E-018
92	COOLING TOWER FAN #3 DISC	COOLING TOWER FAN #3	1-3C #8 W/ #10 GND	1-1/4" CONDUIT		USE SHIELDED VFD CABLE	E-009

NEW MCC EQUIPMENT SCHEDULE

DESCRIPTION	UNIT #	LOAD	CB SIZE (AF/AT)	STARTER SIZE	COMMENTS
MCC-A					
CIRCUIT 9-S HEATER	1D	90 KW	150/150	SIZE 4	NEW HFD CB AND CONTACTOR UNIT
CIRCUIT 12-S LAS HEATER	1G	52.9 KW	100/80	N/A	NEW HFD CB; REUSE CONTACTOR UNIT
CIRCUIT 2-N CS/FS HEATER	2K	112.2 KW	250/175	SIZE 5	NEW HJD CB AND CONTACTOR UNIT
CIRCUIT 10-S HEATER	3C	90 KW	150/150	SIZE 4	NEW HFD CB AND CONTACTOR UNIT
WATER/GLYCOL PUMP #1	3GL	50 HP	150/150	N/A	CB UNIT
COOLING TOWER PUMP #1	3GR	60 HP	150/150	N/A	CB UNIT
NORTH STEAM BOILER	3J	45 KW	100/70	N/A	CB UNIT
CIRCUIT 5-N HEATER	3M	44 KW	100/70	SIZE 3	NEW HFD CB AND CONTACTOR UNIT
CIRCUIT 8-S CS/ENG HEATER	4C	90 KW	150/150	SIZE 4	NEW HFD CB AND CONTACTOR UNIT
CIRCUIT 11-S EC/CC HEATER	4F	52.9 KW	100/80	N/A	NEW HFD CB; REUSE CONTACTOR UNIT
CIRCUIT 4-I HEATER	4H	26.4 KW	100/50	SIZE 2	NEW HFD CB AND CONTACTOR UNIT
MCC-B					
CIRCUIT 8-S CS/ENG HEATER	1G	90 KW	150/150	SIZE 4	NEW HFD CB AND CONTACTOR UNIT
SOUTH STEAM BOILER	1J	45 KW	100/70	N/A	CB UNIT
CIRCUIT 10-S HEATER	1M	90 KW	150/150	SIZE 4	NEW HFD CB AND CONTACTOR UNIT
CIRCUIT 2-N CS/FS HEATER	2F	112.2 KW	250/175	SIZE 5	NEW HJD CB AND CONTACTOR UNIT
COOLING TOWER FAN #3	2K	20 HP	100A/40A	N/A	CB UNIT
WATER/GLYCOL PUMP #2	3FL	50 HP	150/150	N/A	CB UNIT
COOLING TOWER PUMP #2	3FR	60 HP	150/150	N/A	CB UNIT
CIRCUIT 12-S LAS HEATER	3J	44 KW	100/70	SIZE 3	NEW HFD CB AND CONTACTOR UNIT
CIRCUIT 11-S EC/CC HEATER	3M	52.9 KW	100/80	N/A	NEW HFD CB; REUSE CONTACTOR UNIT
CIRCUIT 9-S HEATER	5D	90 KW	150/150	SIZE 4	NEW HFD CB AND CONTACTOR UNIT
CIRCUIT 4-I HEATER	5F	26.4 KW	100/50	N/A	NEW HFD CB; REUSE CONTACTOR UNIT

MOTOR STARTER SCHEDULE ECS ROOM

DESCRIPTION	VOLTAGE	STARTER TYPE	SIZE (HP)	SCHEMATIC DRAWING	A-NUMBER
ICPS BLOWER #1	480V 3-PH	RVSS	125	E-017	A199548
SOUTH BLOWER	480V 3-PH	RVSS	350	E-017	A199545
ICPS BLOWER #2	480V 3-PH	RVSS	125	E-017	A199549
NORTH BLOWER	480V 3-PH	RVSS	350	E-017	A199546
STANDBY BLOWER	480V 3-PH	RVSS	350	E-017	A199547
COOLING TOWER FAN #1	480V 3-PH	VFD	20	E-018	A201224
COOLING TOWER FAN #2	480V 3-PH	VFD	20	E-018	A201225
COOLING TOWER FAN #3	480V 3-PH	VFD	20	E-018	A201226
COOLING TOWER COND. PUMP #1	480V 3-PH	RVSS	60	E-018	A201227
COOLING TOWER COND. PUMP #2	480V 3-PH	RVSS	60	E-018	A201228
WATER/GLYCOL PUMP #1	480V 3-PH	RVSS	50	E-018	A201229
WATER/GLYCOL PUMP #2	480V 3-PH	RVSS	50	E-018	A201230

SYM	ZONE	DESCRIPTION	DATE	APPROVED
REVISIONS				

JACOBS
Jacobs Technology Inc.

SIGNATURES	DATE
DRAWN MARTIN HENNIGH	3/07/14
CHECKED JERRY HUNT	3/07/14
SUBMITTED BRIAN GARLAND	3/07/14
ST OF LICENSURE: TN LICENSE NO: 00113330	
APPROVED GLEN WARD	3/07/14
DUNG TRANG	3/07/14

NATIONAL AERONAUTICS AND SPACE ADMINISTRATION
JOHN F. KENNEDY SPACE CENTER, NASA
KENNEDY SPACE CENTER, FLORIDA

KSC LAUNCH PAD 39-B
ENVIRONMENTAL CONTROL SYSTEM (ECS) REFURBISHMENT
ELECTRICAL SCHEDULES
INSTALLATION

FILE NO.	SIZE	DWG.NO.	REV
	F	79K39602	
PCN. NO. 98898		SHEET 74 OF 187	

E-020

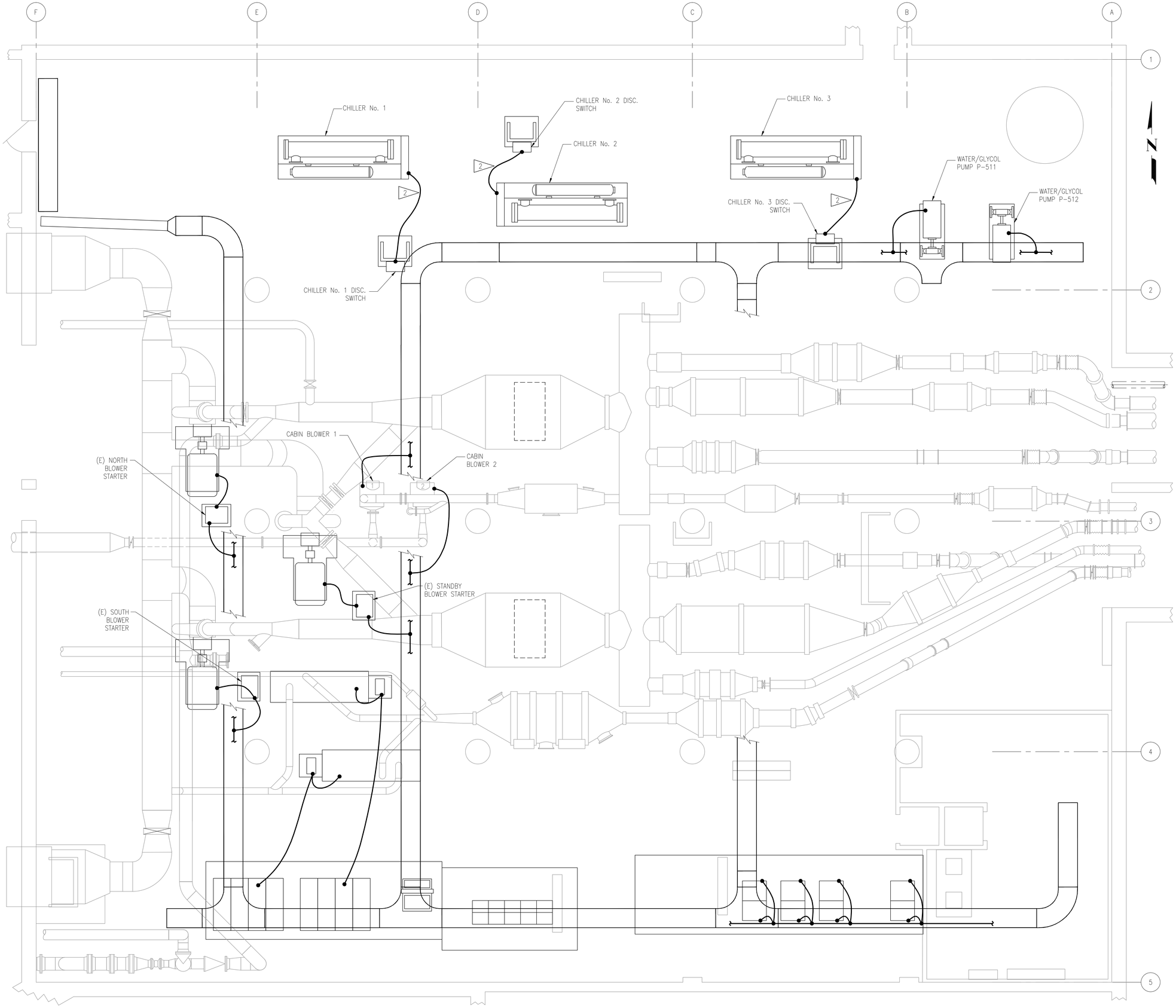

ECS ROOM ELECTRICAL GROUNDING PLAN – EXISTING

SCALE: 1/4"=1'-0"

NOTES:

1. DRAWING INDICATES EXISTING GROUNDING CONDITIONS. CONTRACTOR RESPONSIBLE FOR REMOVAL OF 4/0 BARE COPPER GROUND CONDUCTOR FROM CABLE TRAY GROUND TO EQUIPMENT. GROUND CONDUCTOR IN CABLE TRAY SHALL REMAIN.

2 REMOVE GROUND CONDUCTOR FROM CHILLER DISCONNECTS SWITCH TO CHILLER.

SYM	ZONE	DESCRIPTION	DATE	APPROVED
		REVISIONS		

JACOBS™
Jacobs Technology Inc.

SIGNATURES	DATE
DRAWN MARTIN HENNIGH	3/07/14
CHECKED JERRY HUNT	3/07/14
SUBMITTED BRIAN GARLAND	3/07/14
ST OF LICENSURE: TN LICENSE NO: 00113330	
APPROVED GLEN WARD	3/07/14
DUNG TRANG	3/07/14

NATIONAL AERONAUTICS AND SPACE ADMINISTRATION
JOHN F. KENNEDY SPACE CENTER, NASA
KENNEDY SPACE CENTER, FLORIDA

KSC LAUNCH PAD 39-B
ENVIRONMENTAL CONTROL SYSTEM (ECS) REFURBISHMENT

ELECTRICAL GROUNDING PLAN - EXISTING

FILE NO.	SIZE	DWG.NO.	REV
	F	79K39602	
PCN. NO. 98898		SHEET 75 OF 187	

E-021

NOTES:

1. PROVIDE AND INSTALL NEW 4/0 BARE GROUND CONDUCTOR FROM EXISTING CABLE TRAY GROUND TO EACH EQUIPMENT AS SHOWN. ENSURE ALL METAL PARTS ARE GROUNDED. IF EQUIPMENT IS IN MULTIPLE PIECES OR SECTIONS, ENSURE CONTINUITY OF GROUND THROUGHOUT.

2 PROVIDE AND INSTALL NEW 4/0 BARE GROUND CONDUCTOR IN ADDITIONAL SECTION OF CABLE TRAY. CONTRACTOR SHALL BOND TO GROUND CONDUCTOR IN EXISTING CABLE TRAY.

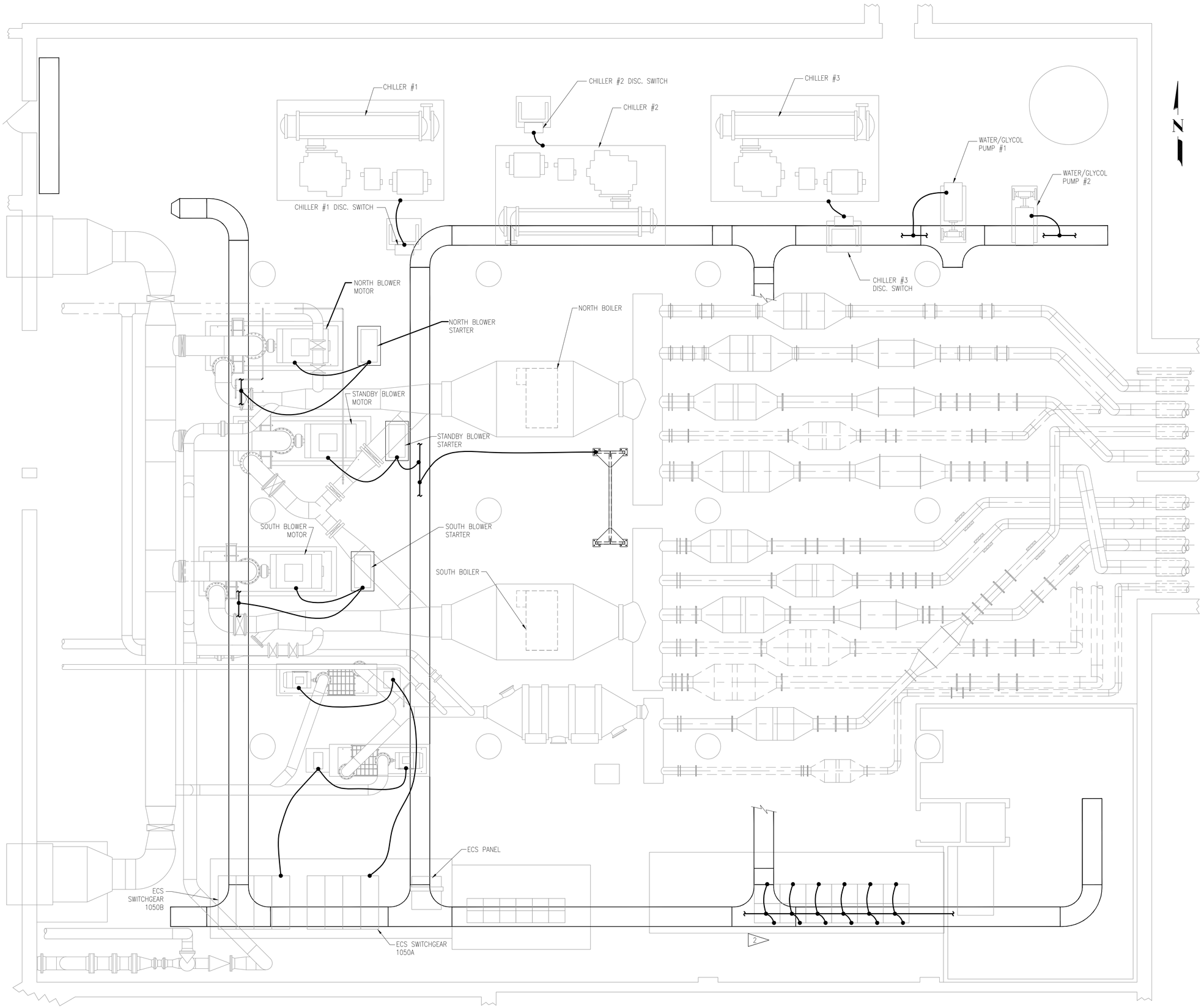

ECS ROOM ELECTRICAL GROUNDING PLAN – NEW
SCALE: 1/4"=1'-0"

SYM	ZONE	DESCRIPTION	DATE	APPROVED
REVISIONS				

JACOBS
Jacobs Technology Inc.

SIGNATURES		DATE
DRAWN	MARTIN HENNIGH	3/07/14
CHECKED	JERRY HUNT	3/07/14
SUBMITTED	BRIAN GARLAND	3/07/14
ST OF LICENSURE: TN LICENSE NO: 00113330		
APPROVED	GLEN WARD	3/07/14
	DUNG TRANG	3/07/14

NATIONAL AERONAUTICS AND SPACE ADMINISTRATION
JOHN F. KENNEDY SPACE CENTER, NASA
KENNEDY SPACE CENTER, FLORIDA

KSC LAUNCH PAD 39-B
ENVIRONMENTAL CONTROL SYSTEM (ECS) REFURBISHMENT
ELECTRICAL GROUNDING
PLAN - NEW

E-022

FILE NO.	SIZE	DWG.NO.	REV
	F	79K39602	

PCN. NO. 98898 SHEET 76 OF 187

GENERAL NOTES:

A. THE CONTROL SYSTEM SHALL PROVIDE FOR DISTRIBUTED CONTROL AND MONITORING OF THE ECS EQUIPMENT AND SYSTEMS. ALL NECESSARY HARDWARE, SOFTWARE, PROGRAMMING, INTEGRATION AND SERVICES SHALL BE PROVIDED AS REQUIRED TO PROVIDE A COMPLETELY FUNCTIONAL SYSTEM WHICH OPERATES IN ACCORDANCE WITH THE SPECIFIED SEQUENCES OF OPERATION IN THE CONTRACT DRAWINGS AND DOCUMENTS SETTING FORTH BASIC GENERAL REQUIREMENTS TO BE FOLLOWED. THE FINAL DETAILED DESIGN INCLUDING EQUIPMENT SELECTION, CHARACTERISTICS, CONFIGURATION, AND APPLICATION OF THE CONTROL SYSTEM COMPONENTS IS THE EXCLUSIVE RESPONSIBILITY OF THE CONTRACTOR.

B. THE LC39B ENVIRONMENTAL CONTROL SYSTEM (ECS) PROVIDES CONDITIONED AIR PURGE TO LAUNCH VEHICLE COMPARTMENTS TO MAINTAIN ENVIRONMENTAL CONDITIONS. THERE ARE THREE MAJOR PLENUMS IN THE ECS, THE NORTH PLENUM, SOUTH PLENUM AND THE INTERIM CRYOGENIC PROPULSION STAGE (ICPS) PLENUM THAT WILL EACH SERVICE DIFFERENT PORTIONS OF THE LAUNCH VEHICLE (TO BE DETERMINED BASED ON THE VEHICLE CONFIGURATION). THERE WILL BE A TOTAL OF 12 DUCTS (8 INSTALLED AND 4 SPARE) WHICH WILL SUPPLY AIR TO THE PAD SURFACE FOR USE BY THE MOBILE LAUNCHER (ML) AND THE LAUNCH VEHICLE (LV). THE ENVIRONMENTAL PARAMETERS TO BE CONTROLLED FOR EACH OF THE DUCTS ARE DEFINED IN THE CONTRACT DRAWINGS. THE PAD B ECS INTERFACES TO THE MOBILE LAUNCHER VIA THE STUB TOWER JUST AFTER THE ML IS MATED TO THE PAD. THE CONDITIONED AIR PURGE IS PROVIDED CONTINUOUSLY UNTIL DISCONNECTED DURING LAUNCH COUNTDOWN ACTIVITIES.

THE GENERAL SCOPE DESCRIPTION INCLUDES BUT IS NOT LIMITED TO:

- THE EXISTING CONTROLS PROCESS EQUIPMENT, SUCH AS BUT NOT LIMITED TO, SENSORS AND TRANSDUCERS SHALL BE REFURBISHED AND/OR REPLACED AS DEFINED WITHIN THE CONTRACT DRAWINGS AND SPECIFICATIONS.
- THE EXISTING CONTROLS RIO ENCLOSURES SHALL BE REUSED AND MODIFIED PER CONTRACT DRAWINGS AND SPECIFICATIONS.
- NEW RIO ENCLOSURES SHALL BE PROVIDED TO HANDLE THE ADDITIONAL I/O REQUIRED BY THE PLANNED FUTURE FLOW CIRCUITS TO THE PAD SURFACE.
- ALL WIRING AND CABLING BETWEEN EXISTING RIO ENCLOSURES AND PROCESS EQUIPMENT BEING REFURBISHED SHALL BE REUSED. THE CONTRACTOR SHALL REUSE, WHERE POSSIBLE, ALL OTHER WIRING AND CABLING BETWEEN THE EXISTING RIO ENCLOSURES AND EQUIPMENT BEING REPLACED.
- THE CONTRACTOR SHALL PROVIDE A FINAL DETAILED CONTROLS HARDWARE DESIGN FOR THE ECS CONTROLS AND INSTRUMENTATION AND ALL SUPPORTING VERIFICATION AND VALIDATION SOFTWARE REQUIRED FOR THIS PROJECT.
- THE EXISTING PLC PROCESSOR RACKS IN ECS CONTROL ROOM (109A) SHALL BE LEFT AS IS AND NOT BE USED IN THE VERIFICATION AND VALIDATION OF THE NEW CONTROLS EQUIPMENT.
- THE CONTRACTOR SHALL SUPPLY A TEMPORARY REDUNDANT PLC PROCESSOR SYSTEM TO BE USED IN THE DEVELOPMENT, VERIFICATION, VALIDATION, AND ACCEPTANCE TESTING OF ALL OF THE CONTROLS HARDWARE AND REFURBISHED ECS PROCESS EQUIPMENT. THIS PLC SYSTEM SHALL BE HOUSED IN A ROLL-AROUND ENCLOSURE AND BE LOCATED IN THE ECS CONTROL ROOM DURING VERIFICATION AND VALIDATION TESTING. ALL OF THE TEMPORARY REDUNDANT PLC AND HARDWARE AND SOFTWARE USED DURING THE VERIFICATION AND VALIDATION SHALL BE THE PROPERTY OF NASA AT THE COMPLETION OF THE PROJECT.
- THE EXISTING ECS SCADA, AND OPERATOR PC SHALL NOT BE USED OR MODIFIED BY THE CONTRACTOR.
- THE CONTRACTOR SHALL PROVIDE AN ALLEN BRADLEY FACTORY TALK VIEW SYSTEM AND SCADA COMPUTER IN THE ECS CONTROL ROOM TO DEVELOP THE TEMPORARY CONTRACTOR SUPPLIED SCADA WHICH SHALL BE USED FOR CONTROLLING THE ECS SYSTEMS AND SUBSYSTEMS. THE SCADA SYSTEM AND PLC SHALL ALSO BE USED FOR THE CONTRACTOR VERIFICATION, VALIDATION, AND ACCEPTANCE TESTING OF THE ECS SYSTEMS AND SUBSYSTEMS.
- THE CONTRACTOR SUPPLIED CPVS (CONTRACTOR PROVIDED VERIFICATION SOFTWARE) SHALL BE USED TO VERIFY AND VALIDATE THE OPERATION OF THE REFURBISHED ECS EQUIPMENT AS WELL AS THE ECS PERFORMANCE SPECIFICATIONS OUTLINED IN THE CONTRACT DOCUMENTS. IT SHALL NOT BE IN THE CONTRACTORS SCOPE TO PROVIDE THE FINAL OPERATIONS APPLICATION SOFTWARE FOR LCC OPERATION.
- THE ECS EQUIPMENT AND PLC RIO SHALL BE DESIGNED, BUILT, AND PROGRAMMED FOR REDUNDANCY AS PER CONTRACT DRAWINGS AND SPECIFICATIONS. HOWEVER THE SCADA AND PLC SOFTWARE SHALL ONLY HAVE TO DEMONSTRATE AND SIMULATE REDUNDANCY BASED UPON PROCESS EQUIPMENT, 60HZ POWER, AND MECHANICAL FAILURE. THE CONTRACTOR SHALL NOT HAVE TO PROVE REDUNDANCY BASE ON FAILURE OF THE 28VDC POWER SYSTEM, THE 28VDC POWER BUS, OR A FAILURE OF A PLC SYSTEM A OR B CPU.
- AFTER INSTALLATION OF THE ECS CONTROLS, INSTRUMENTATION AND CABLING, THE CONTRACTOR SHALL PERFORM END TO END CALIBRATIONS FOR ALL ECS SYSTEM TRANSDUCERS PRIOR TO VERIFICATION AND VALIDATION.
- THE CONTRACTOR SHALL PROVIDE A TEMPORARY 28VDC SYSTEM WHICH SHALL BE USED TO POWER REMOTE I/O ENCLOSURE 37462 DURING VERIFICATION, VALIDATION AND ACCEPTANCE TESTING.

C. THE WORK SHALL INCLUDE, BUT NOT BY WAY OF LIMITATION, DEMOLITION OF EXISTING SYSTEMS, PLC BASED CONTROLLERS. OPERATORS WORKSTATIONS (1), SERVERS (1), NEW SENSORS/TRANSMITTERS, NEW SOFTWARE OPERATING SYSTEMS, CONTROL PANELS, SWITCHES, CONDUIT, CABLE TRAY, WIRING, PROGRAMMING, WORKSTATION SYSTEM GRAPHICS, TERMINATIONS. COMMUNICATIONS WIRING/CABLING. TESTING, CALIBRATION, ACTIVATION, DE-BUGGING, COMMISSIONING, DEMONSTRATIONS, AND TRAINING.

D. EXISTING CONDITIONS ARE TO BE FIELD VERIFIED BY THE CONTRACTOR PRIOR TO THE START OF WORK, INCLUDING WIRING CONTINUITY. VERIFICATION OF ALL INPUTS AND ALL OUTPUTS INCLUDING VFD SIGNALS AND VALVE ACTUATOR RESPONSE; SEE SPECIFICATION SECTION 40 95 00. IDENTIFICATION OF WIRING TERMINALS PROVIDED IS ONLY INTENDED AS A STARTING POINT FOR THE CONTRACTORS AUDIT AND SHALL BE FIELD VERIFIED.

E. COORDINATE REPLACEMENT OF SENSORS WITH EXISTING CONDITIONS AND PROVIDE MODIFICATION OF MOUNTINGS/WELLS/PIPING/TUBING/CONDUIT/CABLE-TRAY/WIRING AND RELATED WORK AS REQUIRED. WHERE EXISTING INSULATION MUST BE DISTURBED IT SHALL BE REPLACED WITH MATERIALS AND JACKETING TO MATCH EXISTING. INSTALL NEW AND REPLACEMENT SENSORS. TUBING AND WIRING TO BE ACCESSIBLE, PROPERLY SUPPORTED, AND ARRANGED SO AS NOT TO IMPEDE OR ENCROACH UPON EQUIPMENT SERVICE AND ACCESS AREAS.

F. SOFTWARE DEVELOPMENT SHALL BE COORDINATED WITH THE GOVERNMENT. GENERALLY SOFTWARE ARCHITECTURE SHALL FOLLOW SPECIFICATION 40 95 00 "ECS CONTROLS AND INSTRUMENTATION" SECTIONS 2.2.30 AND 2.2.31. EXCEPT I/O POINT NAMING SHOULD BE CONSISTENT WITH EXISTING EQUIPMENT DESIGNATIONS AND NOMENCLATURE. WHERE MULTIPLE OPTIONS AS TO THE PROGRAM LOGIC, LOCATION, ACCESSIBILITY OR FUNCTIONALITY EXISTS, PRESENT THE OPTIONS, OUTLINING THE ADVANTAGES AND DISADVANTAGES WITH A RECOMMENDATION TO THE CONTRACTING OFFICER PRIOR TO PROCEEDING WITH THE WORK.

G. SEQUENCE OF OPERATION ARE HIGH LEVEL AND GENERAL IN NATURE SO THEY DO NOT CAPTURE ALL OF THE POSSIBLE SYSTEM INTERACTIONS, LIMITS, CONFIGURATIONS, AND POSSIBLE MODES OF FAILURE. NOR DO THEY REFER TO SPECIFIC DEAD BANDS, INTERLOCKS, RESET RATIOS, DELAYS AND RANGES REQUIRED FOR STABLE OPERATION. THE CONTRACTOR SHALL IDENTIFY SUCH ITEMS AND PROVIDE DETAILED CONTROL METHODOLOGIES AND AUGMENT/ENHANCE THE SEQUENCES OF OPERATIONS TO RESOLVE CONFLICTS AND TROUBLESHOOT SYSTEM OPERATION AS PART OF THE OVERALL PROJECT SOFTWARE DEVELOPMENT. PROVIDE IDENTIFICATION OF SEQUENCES, ALARMS, TRENDS, SET POINTS, PID PARAMETERS, DEAD BANDS, DELAYS, AND RANGES BASED UPON THE ACTUAL PERFORMANCE AND RESPONSE OF THE CONTROLLED EQUIPMENT IN THE BASE CONTRACT PRICE, TO PROVIDE FOR STABLE OPERATION WITHOUT EXCESSIVE CYCLING OR HYSTERESIS.

H. ALL SETPOINTS AND VARIABLES (DEAD BANDS, MIN-MAX RANGES, INTERLOCKS, PID LOOP PARAMETERS, TIME DELAYS, ETC.) SHALL BE FULLY USER ADJUSTABLE AT THE PLC HMI WITHOUT ANY PROGRAMMING CHANGES. ACCESSIBILITY TO MODIFY SETPOINTS, ALARMS AND SIMILAR CONTROL SYSTEM PARAMETERS SHALL BE UNIQUELY DEFINED FOR EACH POINT BASED UPON THE PASSWORD SECURITY LEVEL, REFER TO SPECIFICATION SECTION 40 95 00 "ECS CONTROLS AND INSTRUMENTATION".

J. DEMONSTRATE THE SEQUENCES OF OPERATION IN THE PRESENCE OF THE CONTRACTING OFFICER FOR ALL CONTROLLED EQUIPMENT, TO INCLUDE GENERATION OF ALARMS AND SIMULATION OF POWER OUTAGES, POWER RESTORATION, AND GENERAL EQUIPMENT FAILURES. PROVIDE MANPOWER TO ASSIST AND SUPPORT CALIBRATION OF ALL SENSORS AND COMMISSIONING ACTIVITIES. PROVIDE TRAINING TO ALLOW GOVERNMENT OPERATION OF THE CONTROL SYSTEM AT THE COMPLETION OF EACH PHASE AS WELL AS FINAL COMPREHENSIVE TRAINING AT THE CONCLUSION OF THE PROJECT. DURING COMMISSIONING AND TRAINING PROVIDE MODIFICATION OF SYSTEM GRAPHICS BASED UPON INPUT FROM THE GOVERNMENT COMMISSIONING TEAM AND SYSTEM OPERATORS AS RELAYED BY THE CONTRACTING OFFICER.

K. IN ADDITION TO SPECIFIC EQUIPMENT ALARMS NOTED IN THE SEQUENCE, PROVIDE STANDARD ALARMS FOR ITEMS SUCH AS SENSOR FAILURE, OUT OF RANGE (HIGH-LOW LIMITS), FALSE CONDITIONS (PUMP OFF BUT FLOW SENSED,ETC.) AND SIMILAR ITEMS NOT OTHERWISE SPECIFICALLY NOTED. ALARM RANGES SHALL BE FULLY ADJUSTABLE THROUGH THE LOCAL SCADA AND INCLUDE AN ADJUSTABLE EVENT TIMER (0-3600 SECONDS) OVER WHICH THE CONDITION HAS TO OCCUR TO INITIATE AN ALARM.

L. COORDINATE SEQUENCES AND DATA ACQUISITION REQUIREMENTS AND PROVIDE/SETUP TREND LOG GRAPHS, REPORTS, CALCULATE RUN HOURS, AND SIMILAR PREVENTIVE MAINTENANCE FUNCTIONS. IN ADDITION TO TREND LOG GRAPHS CALLED FOR ELSEWHERE, INCLUDE THE CREATION OF NOT LESS THAN EIGHTEEN MULTIPLE VARIABLE CUSTOM TREND LOG GRAPHS FOR EACH OF THE ECS HVAC SUBSYSTEMS AS DIRECTED BY THE CONTRACTING OFFICER.

M. SPECIFIED REQUIREMENTS, POINT TABLES, I/O SUMMARY TABLES, AND SEQUENCES OF OPERATION ARE COMPLEMENTARY IN THAT THE WORK OR FEATURES CALLED FOR OR REQUIRED BY ANY ONE OF THE ECS SUBSYSTEMS, SHALL APPLY TO ALL. THE CONTRACTOR SHALL COORDINATE THESE REQUIREMENTS, RECONCILE ANY DIFFERENCES, AND PROVIDE A COMPLETE SYSTEM WITH ALL OF THE FEATURES, FUNCTIONS, AND SEQUENCES SPECIFIED, NOTED, INDICATED, AND/OR REQUIRED TO MEET THE MONITORING, ALARMING, AND CONTROL SEQUENCES.

N. THE PLC/RIO ENCLOSURE DETAILS ARE GENERAL IN NATURE AND ARE PROVIDED TO INDICATE THE APPROXIMATE PANEL SIZE, SELECTED COMPONENTS, PROPOSED ARRANGEMENT, AND GENERAL COORDINATION WITH EXISTING CONDITIONS. THEY ARE NOT SUITABLE NOR INTENDED FOR USE AS FABRICATION DOCUMENTS AND DO NOT INDICATE ALL COMPONENTS THAT MAY BE REQUIRED. THE FINAL DETAILED DESIGN AND SELECTION OF CONTROL DEVICES, WIRING EQUIPMENT, AND THE ENCLOSURE LAYOUT, AS REQUIRED TO MEET THE PROJECT REQUIREMENTS, IS THE EXCLUSIVE RESPONSIBILITY OF THE CONTRACTOR. THE NUMBER AND TYPE OF I/O CARDS DEPICTED IS APPROXIMATE, BASED UPON THE POINT COUNT AND SPECIFIED REQUIREMENTS FOR SPARES, AND SHOULD BE CONSIDERED AS A MINIMUM REQUIREMENT: THE EXACT NUMBER AND TYPE SHALL BE AS DETERMINED BY THE CONTRACTOR. THE DESIGN INTENT IS TO REUSE EXISTING SIGNAL CONDUCTORS WITHOUT THE USE OF SPLICES. THE INSTRUMENTATION DEMO INSTALLATION DRAWINGS REFLECT DEMO/RECONNECTION/REUSE OF SELECTED CABLING AND WIRING. THEY DO NOT ILLUSTRATE ALL EXISTING OR NEW RACEWAYS/CONDUITS THAT MAY BE REQUIRED.

P. WIRING SHALL BE INSTALLED IN ACCORDANCE WITH THE NATIONAL ELECTRIC CODE AND EMC REQUIREMENTS OF THE ECS EQUIPMENT ROOM AND SURROUNDING AREAS. CONDUCTORS SHALL BE STRANDED COPPER, AND INSTALLED WITHOUT SPLICES. WIRE NUTS ARE ALLOWED ONLY AT CONNECTION AT THE END DEVICES, I/O CONNECTIONS WITHIN CONTROL ENCLOSURES SHALL BE MADE TO TERMINAL BLOCKS, AND OTHER WIRING SHALL BE LANDED ON MODULAR TERMINAL BLOCK TYPE CONNECTIONS. WIRING WITHIN PANELS SHALL BE RUN PARALLEL AND PERPENDICULAR TO THE PANEL, ARRANGED NEATLY, USING WIRING TROUGHS FOR MULTIPLE CONDUCTOR RUNS AND SPIRAL WRAPPING OF WIRE BUNDLES. WIRE TROUGHS SHALL BE SIZED TO ACCOMMODATE SIGNAL WIRING AS WELL AS FAST BLOCK CABLING. WIRE TROUGHS SHALL NOT BE FILLED TO MORE THAN 50% OF THEIR MAXIMUM CAPACITY. NEW WIRING/CABLING SHALL BE COLOR CODED AND All WIRING SHALL HAVE THE POINT DESCRIPTION AND BE NUMBER CODED ON BOTH ENDS USING HEAT SHRINK TYPE, PRE-PRINTED SLEEVES TO MATCH AS-BUILT WIRING DIAGRAMS, EXCEPT AS OTHERWISE INDICATED, NOTED, OR NECESSITATED BY EXISTING CONDITIONS.

R. ALL CONTROL WIRING INCLUDING POWER, SIGNALING, AND COMMUNICATIONS WIRING SHALL MEET THE REQUIREMENTS SPECIFIED IN DIVISION 26, EXCEPT THAT ONE HALF INCH DIAMETER CONDUIT IS ACCEPTABLE FOR RUNOUTS TO END DEVICES/SENSORS. POWER WIRING SHALL NOT BE RUN IN THE SAME CONDUIT AS LOW VOLTAGE WIRING, SIGNAL, OR COMMUNICATIONS WIRING. FINAL CONNECTION TO SENSORS AND ACTUATORS MAY BE MADE WITH UL CERTIFIED FLEXIBLE CONDUIT NOT EXCEEDING 24 INCHES IN LENGTH. ALL WIRING SHALL BE RUN IN CONDUIT. WHERE PRESENT, WIRING MAY BE RUN IN CABLE TRAY WITH THE APPROVAL OF THE CONTRACTING OFFICER.

S. 120-VOLT POWER TO PLC CONTROL ENCLOSURES SHALL BE PROVIDED IN ACCORDANCE WITH DIVISION 26 SPECIFICATIONS. POWER SUPPLIES, DC POWER RECTIFIERS, AND EXTENSION OF POWER TO ACTUATORS, TRANSMITTERS, AND SIMILAR CONTROL DEVICES AND SENSORS SHALL BE PROVIDED IN ACCORDANCE WITH DIVISION 23 SPECIFICATIONS. COMMUNICATIONS WIRING WILL BE PROVIDED IN ACCORDANCE WITH SPECIFICATIONS 120E3100001, 120E3100003, KSC-E-165, AND KSC-E-166. COORDINATE PROTOCOLS, MEDIA TYPE, DROP LOCATIONS AND TERMINATION REQUIREMENTS WITH THE NASA CONTRACTING OFFICER.

T. TO THE EXTENT POSSIBLE AND EXCEPT AS OTHERWISE NOTED, EXISTING CABLE TRAY AND/OR CONDUIT MAY BE REUSED. WHERE I/O DEVICES/SENSORS ARE BEING PERMANENTLY REMOVED, REMOVE CONDUIT AND/OR WIRING TO THE GREATEST EXTENT POSSIBLE WITHOUT ADVERSELY IMPACTING REMAINING WIRING; AT A MINIMUM REMOVE TO THE FIRST RACEWAY WHERE EXISTING WIRING IS ENCOUNTERED WHICH IS TO REMAIN. REMOVE EXISTING CONDUCTORS FROM CABLE TRAY, TROUGHS AND GUTTERS WHERE DEVICES/WIRING IS CALLED TO BE REMOVED.

V. SCADA/HMI GRAPHICS SHALL BE OF TWO TYPES; TABULARIZED DATA AND PICTORIAL REPRESENTATIONS OF EQUIPMENT AND SYSTEMS. THE COLOR SCHEME USED SHALL BE CONSISTENT THROUGHOUT THE PROJECT. A PICTORIAL COLOR GRAPHIC OF ALL MAJOR ECS EQUIPMENT SHALL BE PROVIDED FOR THE NEW SCADA/HMI OPERATING SYSTEM SOFTWARE AND ALL POINTS SHALL BE DISPLAYED. PICTORIAL GRAPHICS SHALL INCLUDE COLOR BASED DISPLAY OF DATA AS WELL AS REPRESENTATION OF THE EQUIPMENT AND SUBSYSTEMS. PICTORIAL GRAPHICS SHALL INCLUDE DATA INCLUDED IN THE INPUT/OUTPUT SUMMARY TABLE, ALL INPUTS/OUTPUT VALUES, ON, OFF, MAINTENANCE STATUS, SET POINTS AND INCLUDE VISUAL NOTIFICATION OF ALARM CONDITIONS. ALL CONTRACTOR SUPPLIED SCADA/HMI GRAPHICS SHALL BE PROVIDED IN ACCORDANCE WITH SPECIFICATION SECTION 40 95 00 "ECS CONTROLS AND INSTRUMENTATION".

W. WORK IS TO BE PHASED IN ACCORDANCE WITH SPECIFICATION SECTION 40 95 00 "ECS CONTROLS AND INSTRUMENTATION". A PRE-WORK MEETING SHALL BE HELD PRIOR TO THE START OF WORK FOR EACH PHASE. AT THE END OF EACH PHASE, WORK SHALL BE INTEGRATED AND COORDINATED WITH THE WORK OF PREVIOUS PHASE TO INCLUDE. BUT NOT BY WAY OF LIMITATION, CONTROL POINTS, UPDATE OF SYSTEM GRAPHICS, FUNCTIONAL TESTING, COMMISSIONING AND SIMILAR ITEMS TO PROVIDE A COMPLETE AND SEAMLESS CONTROL NETWORK. AT THE CONCLUSION OF THE PROJECT ALL CONTROL WORK SHALL BE FULLY INTEGRATED, VERIFIED, COMMISSIONED AND ELEMENTS COMMON TO ALL PHASES EVALUATED TO ENSURE THE FINAL OPERATION IS FULLY COORDINATED BETWEEN EACH OF THE PHASES.

Y. THE CONTROL OF MODULATING VALVES AND VFD'S SHALL UTILIZE PROPORTIONAL-INTEGRAL-DERIVATIVE (PID) CONTROL LOOPS. THE CONTRACTOR SHALL PROVIDE GRAPHICAL INTERFACE TO THE LOOPS WITH FULLY ADJUSTABLE GAIN VARIABLES, DELAYS AND I/O VARIABLES FOR SET-UP, MONITORING AND TUNING TO PROVIDE STABLE OPERATION. THE CONTRACTOR SHALL ALSO PROVIDE A GRAPH OF THE VALVE POSITION OVER TIME. CONTROL STABILITY SHALL BE DEMONSTRATED BY SIMULATING OR CAUSING A LARGE OFFSET IN THE MEASURED CONTROL INPUT VARIABLE AND PROVIDING A TIME BASED TREND GRAPH OF THE CONTROLLED VARIABLE.

Z. WHERE CONDUITS ARE REMOVED FROM JUNCTION BOXES AND ENCLOSURES, AND THE JUNCTION BOXES AND ENCLOSURES REMAIN, PROVIDE PROPERLY SIZED KNOCKOUT PLUGS TO SEAL OPENINGS. WHERE CONDUCTORS ARE ABANDONED THEY SHALL BE GROUPED, STRAPPED AND IDENTIFIED AS "ABANDONED IN PLACE" AND, IF KNOWN, WHAT THEY PREVIOUSLY SERVED. NEW ENCLOSURES SHALL BE COORDINATED WITH EXISTING CONDUIT/CABLETRAY LOCATIONS OR EXISTING CONDUIT/CABLETRAY MODIFIED TO SUITE THE NEW ENCLOSURES PROVIDED THE EXISTING I/O CONDUCTORS MAY BE REUSED, OR REPLACED AT THE CONTRACTORS OPTION AT NO ADDITIONAL COST TO THE GOVERNMENT.

SYM	ZONE	DESCRIPTION	DATE	APPROVED
REVISIONS				

JACOBS
Jacobs Technology Inc.

SIGNATURES		DATE
DRAWN	M. HENNIGH	3/07/14
CHECKED	J. WHITEFORD	3/07/14
SUBMITTED	S. RITTER	3/07/14
ST OF LICENSURE: TN LICENSE NO: 00110556		
APPROVED	G. WARD	3/07/14
	S. HUNT	3/07/14

NATIONAL AERONAUTICS AND SPACE ADMINISTRATION
JOHN F. KENNEDY SPACE CENTER, NASA
KENNEDY SPACE CENTER, FLORIDA

KSC LAUNCH PAD 39-B
ENVIRONMENTAL CONTROL SYSTEM (ECS) REFURBISHMENT
INSTRUMENTATION
GENERAL NOTES

FILE NO.	SIZE	DWG.NO.	REV
	F	79K39602	
PCN. NO. 98898		SHEET 84 OF 187	

I-001

SINGLE LINE SYMBOLS

- TRANSFORMER
- DELTA CONNECTION
- GROUNDED WYE CONNECTION
- ISOLATION TRANSFORMER
- CT 3 1200/5 INST — CURRENT TRANSFORMER WITH CURRENT RATIO INDICATION (3 UNITS)
- LOAD BREAK CONNECTOR
- LIGHTNING ARRESTER
- XXX — MOTOR (XXX=HP RATING)
- 5A — AC CONTACTS
- 40 — MOLDED CASE CIRCUIT BREAKER, 40 AMP TRIP RATING
- 400/400 — CIRCUIT BREAKER, WITHDRAWABLE TYPE 400 AMP FRAME SET AT 400 AMPS
- DISCONNECT SWITCH
- 2A — FUSE 2A=FUSE AMP RATING
- HTR — ELECTRIC HEAT EXCHANGER
- OVERLOAD SENSOR
- FUSED DISCONNECT
- COMBINATION MOTOR STARTER
- XXX — MOTOR WITH NON-FUSED DISCONNECT XXX = HP
- XXX — MOTOR WITH FUSED DISCONNECT XXX = HP
- XXX — MOTOR AC XXX = HP

RACEWAY SYMBOLS

- CONDUIT EXPOSED
- CONDUIT CONCEALED, OR AS SHOWN BELOW PLATFORMS AND RAISED FLOORING
- CONDUIT TEE
- FLEXIBLE CONDUIT

FIELD DEVICES

- S_a — SWITCH, SINGLE POLE 20 AMP, 120-277V; a – SWITCH DESIGNATION
- S_3 — SWITCH, THREE-WAY 20 AMP, 120-277V
- DISCONNECT SWITCH, NON-FUSED
- DISCONNECT SWITCH, FUSED
- FVNR COMBINATION STARTER (SIZE AS NOTED)
- MOTOR STARTER WITH CIRCUIT BREAKER
- LOCAL PUSHBUTTON CONTROL STATION
- ES — EMERGENCY STOP PUSH BUTTON
- KK — KIRK KEY DOOR SWITCH
- MR — MASTER RESET PUSH BUTTON
- ZSL 1 — POSITION LIMIT SWITCH
- WIRES (L-R) 2 HOT, 1 NEUTRAL, 1 GROUND)
- HOME RUN TO RP-1 CIRCUITS 1 AND 3
- HOME RUN TO LIGHTING PANEL
- J — JUNCTION BOX, SIZE AS REQ'D
- 120V RECEPTACLE
- 120V DUPLEX RECEPTACLE
- 480V, 3 PHASE WELDING RECEPTACLE

GROUNDING SYMBOLS

- EXOTHERMIC CONNECTION
- GROUND

LIGHTING SYMBOLS

- A1a — LIGHT FIXTURE, WALL MOUNT A=FIXTURE TYPE, 1=CIRCUIT, a=SWITCH IDENTIFICATION
- A1a — LIGHT FIXTURE, POLE MOUNT A=FIXTURE TYPE, 1=CIRCUIT, a=SWITCH IDENTIFICATION
- A1a — HID LIGHT FIXTURE A=FIXTURE TYPE, 1=CIRCUIT, a=SWITCH IDENTIFICATION
- BATTERY PACK EMERGENCY LIGHT, DUAL LAMP, ARROWS INDICATE LAMP DIRECTION
- X A1 — EXIT LIGHT OVER DOORWAY
- SW — SAFETY WARNING LIGHT
- G — PUSH TO TEST, PILOT LIGHT

WIRING DIAGRAM SYMBOLS

- CONTACT NORMALLY OPENED
- CONTACT NORMALLY CLOSED
- CONTACTOR OR RELAY COIL
- LEVEL SWITCH, N.C. OPENS ON RISING LEVEL
- LEVEL SWITCH, N.O. CLOSES ON RISING LEVEL
- LEVEL SWITCH, N.C. OPENS ON FALLING LEVEL
- LEVEL SWITCH, N.O. CLOSES ON FALLING LEVEL
- E-STOP PUSHBUTTON
- POSITION SWITCH, NORMALLY CLOSED
- POSITION SWITCH, NORMALLY OPEN
- SOLENOID
- TEMPERATURE ELEMENT
- HEATER ELEMENT
- M — MOTOR OR GENERATOR, 3 PHASE
- OFF / HAND / AUTO — SELECTOR SWITCH, NORMALLY CLOSED
- START — PUSHBUTTON SWITCH, NORMALLY OPEN
- 120V DUPLEX RECEPTACLE

ABBREVIATIONS

AFF	ABOVE FINISHED FLOOR
AI	ANALOG INPUT
AO	ANALOG OUTPUT
ASD	ADJUSTABLE SPEED DRIVE
ATS	AUTOMATIC TRANSFER SWITCH
BHDC	BARE HARD-DRAWN COPPER
BPC	BY-PASS CONTACTOR
BSDC	BARE SOFT-DRAWN COPPER
DI	DIGITAL INPUT
DO	DIGITAL OUTPUT
DWG	DRAWING
EOLR	END-OF-LINE RESISTOR
FA	FORCED AIR
FCS	FACILITY CONTROL SYSTEM
FVNR	FULL VOLTAGE NON-REVERSING
HMI	HUMAN MACHINE INTERFACE
KAIC	KILO-AMPS INTERRUPTING CAPACITY
KGCS	KENNEDY GROUND CONTROL SYSTEM
LED	LIGHT EMITTING DIODE
MC	MAIN CONTACTOR
MCB	MAIN CIRCUIT BREAKER
MH	METAL HALIDE
MI	MEMORY INPUT
MO	MEMORY OUTPUT
OA	OPEN AIR
PLC	PROGRAMMABLE LOGIC CONTROLLER
PW	PROTECTOWIRE
RVNR	REDUCED VOLTAGE NON-REVERSING
SCADA	SUPERVISORY CONTROL AND DATA ACQUISITION
SCR	SILICON CONTROLLED RECTIFIER
SD	SMOKE DETECTOR
SS	SOLID STATE
TB	TERMINAL BLOCK
UV	ULTRAVIOLET
U.N.O.	UNLESS NOTED OTHERWISE
WLA	WARNING LIGHT ASSEMBLY

NOTES:

1. ALL WORK SHALL BE PERFORMED IN ACCORDANCE WITH THE LATEST EDITION OF THE NATIONAL ELECTRIC CODE, NFPA 70 AND THE NATIONAL ELECTRIC SAFETY CODE, C2.
2. ROUTE CONDUIT PERPENDICULAR OR PARALLEL TO BUILDING WALLS. ROUTE OVERHEAD IN A MANNER TO AVOID INTERFERENCE WITH MECHANICAL EQUIPMENT INSTALLATIONS. GROUP CONDUIT TOGETHER IN COMMON RUNS WHERE POSSIBLE. SUPPORT CONDUIT FROM BUILDING WALLS, COLUMNS, AND CLAMPS AS SPECIFIED IN THE CONTRACT DOCUMENTS.
3. ALL POWER FEEDERS AND BRANCH CIRCUITS SHALL CONTAIN AN EQUIPMENT GROUNDING CONDUCTOR. THE CONDUCTOR SHALL BE ROUTED IN THE SAME CONDUIT AS THE CIRCUIT CONDUCTORS.
4. ALL POWER WIRING SHALL BE #12 AWG IN 3/4 INCH RIGID STEEL CONDUIT UNLESS SHOWN OTHERWISE.
5. CONDUIT SIZES FOR POWER WIRING ARE BASED ON TYPE XHHW WIRE. IF OTHER WIRE TYPES ARE USED, AS ALLOWED IN THE SPECIFICATIONS, CONDUIT SIZES AND FILLS SHALL BE ADJUSTED TO COMPLY WITH NFPA 70.
6. ALL SYMBOLS SHOWN ON THIS SHEET MAY OR MAY NOT BE USED IN THIS DRAWING PACKAGE.

SYM	ZONE	DESCRIPTION	DATE	APPROVED
REVISIONS				

JACOBS
Jacobs Technology Inc.

SIGNATURES		DATE
DRAWN	M. HENNIGH	3/07/14
CHECKED	J. WHITEFORD	3/07/14
SUBMITTED	S. RITTER	3/07/14
ST OF LICENSURE: TN LICENSE NO: 00110556		
APPROVED	G. WARD	3/07/14
	S. HUNT	3/07/14

NATIONAL AERONAUTICS AND SPACE ADMINISTRATION
JOHN F. KENNEDY SPACE CENTER, NASA
KENNEDY SPACE CENTER, FLORIDA

KSC LAUNCH PAD 39-B
ENVIRONMENTAL CONTROL SYSTEM (ECS) REFURBISHMENT
INSTRUMENTATION
ABBREVIATIONS AND SYMBOLS

I-002

FILE NO.	SIZE F	DWG.NO. 79K39602	REV
PCN. NO. 98898		SHEET 85 OF 187	

NASA PAD 39B – ECS ROOM EXISTING EQUIPMENT AND REFURBISHMENT SCHEDULE

REF DES	DESCRIPTION	REFURBISHMENT PLAN	LOCATION (REF. SHEET I-006)	REFERENCE DRAWINGS
34609	GSP LOCAL POWER DISTRIBUTOR	DISTRIBUTOR REMAINS – ENCLOSURE SHALL BE MODIFIED TO PROVIDE 28VDC POWER FOR NEW RIO ENCLOSURES	A-3	
34630 (35422)	KGCS/ECS LOCAL CONTROL DISTRIBUTOR	LOCAL CONTROL DISTRIBUTOR TO REMAIN WITH NO MODIFICATION	A-3	
35423	REMOTE I/O DISTRIBUTOR	ENCLOSURE AND WIRING TO BE MODIFIED – EXTERNAL WIRING TO BE DEMOED	B-4	I-016 THRU I-022
35424	REMOTE I/O DISTRIBUTOR	ENCLOSURE AND WIRING TO BE MODIFIED – EXTERNAL WIRING TO BE DEMOED	C-4	I-023 THRU I-029
35425	REMOTE I/O DISTRIBUTOR	ENCLOSURE AND WIRING TO BE MODIFIED – EXTERNAL WIRING TO BE DEMOED	C-4	I-030 THRU I-036
35426	REMOTE I/O DISTRIBUTOR	ENCLOSURE AND WIRING TO BE MODIFIED – EXTERNAL WIRING TO BE DEMOED	F-5	I-037 THRU I-043
35427	REMOTE I/O DISTRIBUTOR	ENCLOSURE AND WIRING TO BE MODIFIED – EXTERNAL WIRING TO BE DEMOED	B-5	I-044 THRU I-050
35433	SWITCH-GEAR (SG 1)	SWITCHGEAR TO BE MODIFIED (SEE ELECTRICAL DRAWINGS)	B-6	E-002
35434	SWITCH-GEAR (SG 2)	SWITCHGEAR TO BE MODIFIED (SEE ELECTRICAL DRAWINGS)	B-7	E-003
35435	MOTOR CONTROL CENTER (MCC A)	MOTOR CONTROL CENTER TO BE MODIFIED (SEE ELECTRICAL DRAWINGS)	B-6	E-002
35436	MOTOR CONTROL CENTER (MCC B)	MOTOR CONTROL CENTER TO BE MODIFIED (SEE ELECTRICAL DRAWINGS)	B-6	E-003
35437	HEATER SCR S	(SEE NOTE 8 ON THIS SHEET)	B-4	E-002, E-003
35438	HEATER SCR S	(SEE NOTE 8 ON THIS SHEET)	B-4	E-002, E-003
35439	HEATER SCR S	(SEE NOTE 8 ON THIS SHEET)	B-4	E-002, E-003
35440	HEATER SCR S	(SEE NOTE 8 ON THIS SHEET)	B-3	E-002, E-003
35761	REMOTE I/O DISTRIBUTOR	REMAINS – EXTERNAL WIRING TO BE DEMOED (SEE CABLE DEMO TABLE)	D-2	
35762	LOCAL PUMP CONTROL SWITCH	DEMO	F-3	
35799	AUTO-XFER SWITCH (SWITCHGEARS)	REMAINS WITH NO MODIFICATIONS	B-6	
35800	SCADA PC 1	STAYS – CONTRACTOR TO PROVIDE NE SCADA PC FOR VALIDATION TESTING	B-3	
35801	SCADA PC 2	STAYS – CONTRACTOR TO PROVIDE NE SCADA PC FOR VALIDATION TESTING	B-3	
35423A13	POSITION CONTROLLER	DEMO CONTROLLER AND CABLING	A-7	
35423A14	POSITION CONTROLLER	DEMO CONTROLLER AND CABLING	A-7	
35423A15	PRESSURE TRANSDUCER (INST. RACK 1)	DEMO TRANSDUCER AND CABLING	B-8	
35423A16	PRESSURE TRANSDUCER	DEMO TRANSDUCER AND CABLING	A-7	
35423A17	PRESSURE TRANSDUCER (INST. RACK 1)	DEMO TRANSDUCER AND CABLING	B-8	
35423A18	DIFFERENTIAL PRESSURE TRANSDUCER	DEMO TRANSDUCER AND CABLING	A-7	
35423A19	PRESSURE TRANSDUCER	DEMO TRANSDUCER AND CABLING	A-7	
35423A20	TEMPERATURE TRANSDUCER	DEMO TRANSDUCER AND CABLING	A-8	
35423A21	PRESSURE TRANSDUCER	DEMO TRANSDUCER AND CABLING	A-7	
35423A22	PRESSURE TRANSDUCER (INST. RACK 1)	DEMO TRANSDUCER AND CABLING	B-8	
35423A23	DIFFERENTIAL PRESSURE TRANSDUCER	DEMO TRANSDUCER AND CABLING	A-7	
35423A24	PRESSURE TRANSDUCER	DEMO TRANSDUCER AND CABLING	A-7	
35423A25	VALVE	DEMO VALVE AND CABLING	A-7	
35423A26	VALVE	DEMO VALVE AND CABLING	A-7	
35423A27	PRESSURE SWITCH (INST. RACK 1)	DEMO TRANSDUCER AND CABLING	B-8	
35423A28	VALVE	DEMO VALVE AND CABLING	A-7	
35423A29	VALVE	DEMO VALVE AND CABLING	A-7	
35423A30	PRESSURE SWITCH (INST. RACK 1)	DEMO TRANSDUCER AND CABLING	B-8	
35423A31	SOLENOID (INST. RACK. 1)	DEMO SOLENOID AND CABLING	B-8	
35423A32	SOLENOID (INST. RACK. 1)	DEMO SOLENOID AND CABLING	B-8	
35423A33	OVER TEMP SWITCH	DEMO SWITCH AND CABLING	F-4	
35423A34	OVER TEMP SWITCH	DEMO SWITCH AND CABLING	F-4	
35423A35	OVER TEMP SWITCH	DEMO SWITCH AND CABLING	F-4	
35423A36	OVER TEMP SWITCH	DEMO SWITCH AND CABLING	F-4	
35423A37	OVER TEMP SWITCH	DEMO SWITCH AND CABLING	E-4	
35423A38	OVER TEMP SWITCH	DEMO SWITCH AND CABLING	E-4	
35423A39	OVER TEMP SWITCH	DEMO SWITCH AND CABLING	D-4	
35423A40	OVER TEMP SWITCH	DEMO SWITCH AND CABLING	D-4	
35423A41	OVER TEMP SWITCH	DEMO SWITCH AND CABLING	D-4	
35423A42	OVER TEMP SWITCH	DEMO SWITCH AND CABLING	D-4	
35423A43	OVER TEMP SWITCH	DEMO SWITCH AND CABLING	C-4	
35423A44	OVER TEMP SWITCH	DEMO SWITCH AND CABLING	C-4	
35424A13	VALVE	(SEE NOTE 4 ON THIS SHEET)	E-7	
35424A14	VALVE	(SEE NOTE 4 ON THIS SHEET)	F-7	
35424A15	VALVE	(SEE NOTE 4 ON THIS SHEET)	E-6	
35424A16	VALVE	(SEE NOTE 4 ON THIS SHEET)	F-7	
35424A17	VALVE	(SEE NOTE 4 ON THIS SHEET)	C-6	
35424A18	VALVE	(SEE NOTE 4 ON THIS SHEET)	C-6	
35424A19	VALVE	(SEE NOTE 4 ON THIS SHEET)	C-6	
35424A20	VALVE	DEMO AND REPLACE	E-7	
35424A21	VALVE	DEMO AND REPLACE	E-6	
35424A22	VALVE	DEMO AND REPLACE	D-7	
35424A23	VALVE	DEMO AND REPLACE	D-7	
35424A24	NORTH STEAM BOILER	(SEE NOTE 8 ON THIS SHEET)	F-5	
35424A26	CHILLER 1 CONTROL CABINET	(SEE NOTE 7 ON THIS SHEET)	G-6	
35424A28	SOUTH STEAM BOILER	(SEE NOTE 8 ON THIS SHEET)	D-5	
35424A30	CHILLER 2 CONTROL CABINET	(SEE NOTE 7 ON THIS SHEET)	G-5	
35424A33	CHILLER 3 CONTROL CABINET	(SEE NOTE 7 ON THIS SHEET)	G-4	
35425A13	VALVE	(SEE NOTE 8 ON THIS SHEET)	A-8	
35425A14	VALVE	(SEE NOTE 8 ON THIS SHEET)	A-8	
35425A15	VALVE	(SEE NOTE 3 ON THIS SHEET)	E-6	
35425A16	VALVE	(SEE NOTE 4 ON THIS SHEET)	D-7	
35425A17	VALVE	(SEE NOTE 3 ON THIS SHEET)	C-6	
35425A18	VALVE	(SEE NOTE 5 ON THIS SHEET)	F-3	
35425A19	VALVE POSITION INDICATOR	(SEE NOTE 5 ON THIS SHEET)	F-3	
35425A20	VALVE	(SEE NOTE 5 ON THIS SHEET)	F-3	
35425A21	VALVE POSITION INDICATOR	(SEE NOTE 5 ON THIS SHEET)	F-3	
35425A22	VALVE	(SEE NOTE 5 ON THIS SHEET)	E-3	

NOTES:

1. UNLESS OTHERWISE NOTED ALL CABLES TO FIELD EQUIPMENT SLATED FOR DEMOLITION SHALL BE DEMOED TO THE RESPECTIVE RIO DISTRIBUTION ENCLOSURE AND STORED FOR USE DURING THE NEW EQUIPMENT INSTALLATION.
2. CONTRACTOR SHALL REUSE IF LENGTH, AND TYPE PERMITS, ALL CABLES, BETWEEN RIO DISTRIBUTION ENCLOSURES AND FIELD DEVICES.
3. CONTROL VALVE TO REMAIN. DEMO EXISTING CONTROL CABLE BACK TO THE RIO DISTRIBUTION AND STORE FOR USE DURING INSTALLATION.
4. CONTROL VALVE CURRENTLY DOES NOT EXIST HOWEVER THE CONTROL CABLE HAS BEEN RUN. DEMO THE EXISTING CONTROL CABLE BACK TO THE RIO DISTRIBUTION AND STORE FOR USE DURING INSTALLATION.
5. CONTROL VALVE IS TO BE DEMOED. DEMO EXISTING CONTROL CABLE BACK TO THE RIO DISTRIBUTION AND STORE FOR USE DURING INSTALLATION.
6. INSTRUMENT RACKS #1, #2, #3, AND #4 SHALL BE REUSED TO MOUNT NEW ECS INSTRUMENTATION DURING INSTALLATION.
7. CHILLER CONTROL CABINETS SHALL BE DEMOED WITH CHILLERS DURING CHILLER DEMOLITION. CONTRACTOR SHALL DEMO EXISTING CONTROLS CABLING BACK TO THE RIO DISTRIBUTOR, CAREFULLY COIL, AND STORE FOR FUTURE USE DURING INSTALLATION.
8. EQUIPMENT IS BEING REFURBISHED AND OR REPLACED. CONTROL CABLING SHALL BE DISCONNECTED AT BOTH ENDS AND EQUIPMENT END SHALL BE COILED UP AND STORED IN CABLE TRAY FOR USE DURING INSTALLATION OF REFURBISHED EQUIPMENT CONTROLS.
9. CONTRACTOR SHALL COORDINATE ALL CONTROLS DEMOLITION WITH ALL OTHER DISCIPLINES AND PROVIDE A DEMOLITION PLAN FOR APPROVAL BY THE NASA CONTRACTING OFFICER. BEFORE CONTROLS DEMOLITION PLAN MAY BEGIN.

SYM	ZONE	DESCRIPTION	DATE	APPROVED
		REVISIONS		

JACOBS
Jacobs Technology Inc.

SIGNATURES		DATE
DRAWN	M. HENNIGH	3/07/14
CHECKED	J. WHITEFORD	3/07/14
SUBMITTED	S. RITTER	3/07/14
ST OF LICENSURE: TN LICENSE NO: 00110556		
APPROVED	G. WARD	3/07/14
	S. HUNT	3/07/14

NATIONAL AERONAUTICS AND SPACE ADMINISTRATION
JOHN F. KENNEDY SPACE CENTER, NASA
KENNEDY SPACE CENTER, FLORIDA

KSC LAUNCH PAD 39-B
ENVIRONMENTAL CONTROL SYSTEM (ECS) REFURBISHMENT
INSTRUMENTATION
EXISTING EQUIPMENT AND
DEMOLITION SCHEDULE SHEET 1

I-003

FILE NO.	SIZE	DWG.NO.	REV
	F	79K39602	
PCN. NO. 98898		SHEET 86 OF 187	

NASA PAD 39B – ECS ROOM EXISTING EQUIPMENT AND REFURBISHMENT SCHEDULE (CONTINUED)

REF DES	DESCRIPTION	REFURBISHMENT PLAN	LOCATION (REFERENCE DRAWING I-006)	REFERENCE DRAWINGS
35425A23	VALVE	(SEE NOTE 5 ON THIS SHEET)	D-3	
35425A24	VALVE	(SEE NOTE 5 ON THIS SHEET)	D-2	
35425A25	VALVE POSITION INDICATOR	(SEE NOTE 5 ON THIS SHEET)	D-3	
35425A26	VALVE	(SEE NOTE 5 ON THIS SHEET)	D-2	
35425A27	VALVE POSITION INDICATOR	(SEE NOTE 5 ON THIS SHEET)	C-4	
35426A14	DIFFERENTIAL PRESSURE TRANSDUCER	DEMO TRANSDUCER AND CABLING	H-7	
35426A15	TEMPERATURE TRANSDUCER	DEMO TRANSDUCER AND CABLING	H-7	
35426A16	TEMPERATURE TRANSDUCER	DEMO TRANSDUCER AND CABLING	H-7	
35426A17	PRESSURE SWITCH	(SEE NOTES 3 AND 8 ON THIS SHEET)	F-3	
35426A18	PRESSURE SWITCH	(SEE NOTES 3 AND 8 ON THIS SHEET)	G-3	
35426A19	DIFFERENTIAL PRESSURE TRANSDUCER (INST. RACK 2)	DEMO TRANSDUCER AND CABLING	F-5	
35426A20	TEMPERATURE TRANSDUCER	(SEE NOTES 4 AND 8 ON THIS SHEET)	G-3	
35426A21	TEMPERATURE TRANSDUCER	(SEE NOTES 4 AND 8 ON THIS SHEET)	G-3	
35426A30	PRESSURE TRANSDUCER (INST. RACK 3)	DEMO TRANSDUCER AND CABLING	E-7	
35426A31	PRESSURE TRANSDUCER (INST. RACK 3)	DEMO TRANSDUCER AND CABLING	E-7	
35426A32	PRESSURE TRANSDUCER (INST. RACK 3)	DEMO TRANSDUCER AND CABLING	E-7	
35426A33	TEMPERATURE TRANSDUCER	(SEE NOTES 8 AND 9 ON THIS SHEET)	F-6	
35426A34	TEMPERATURE TRANSDUCER	(SEE NOTES 8 AND 9 ON THIS SHEET)	F-5	
35426A35	TEMPERATURE TRANSDUCER	(SEE NOTES 8 AND 9 ON THIS SHEET)	C-5	
35426A36	TEMPERATURE TRANSDUCER	(SEE NOTES 8 AND 9 ON THIS SHEET)	D-5	
35426A37	TEMPERATURE TRANSDUCER	(SEE NOTES 8 AND 9 ON THIS SHEET)	C-5	
35426A38	TEMPERATURE TRANSDUCER	(SEE NOTES 8 AND 9 ON THIS SHEET)	C-5	
35426A39	PRESSURE TRANSDUCER (INST. RACK 4)	DEMO TRANSDUCER AND CABLING	D-4	
35426A40	DIFFERENTIAL PRESSURE TRANSDUCER (INST. RACK 4)	DEMO TRANSDUCER AND CABLING	D-4	
35426A41	PRESSURE TRANSDUCER (INST. RACK 4)	DEMO TRANSDUCER AND CABLING	D-4	
35426A42	PRESSURE TRANSDUCER (INST. RACK 4)	DEMO TRANSDUCER AND CABLING	D-4	
35426A43	DIFFERENTIAL PRESSURE TRANSDUCER (INST. RACK 4)	DEMO TRANSDUCER AND CABLING	D-4	
35426A44	PRESSURE TRANSDUCER (INST. RACK 4)	DEMO TRANSDUCER AND CABLING	D-4	
35426A45	PRESSURE TRANSDUCER (INST. RACK 4)	DEMO TRANSDUCER AND CABLING	D-4	
35426A46	DIFFERENTIAL PRESSURE TRANSDUCER (INST. RACK 4)	DEMO TRANSDUCER AND CABLING	D-4	
35426A47	PRESSURE TRANSDUCER (INST. RACK 4)	DEMO TRANSDUCER AND CABLING	D-4	
35426A48	PRESSURE TRANSDUCER (INST. RACK 4)	DEMO TRANSDUCER AND CABLING	D-4	
35426A49	DIFFERENTIAL PRESSURE TRANSDUCER (INST. RACK 4)	DEMO TRANSDUCER AND CABLING	D-4	
35426A50	PRESSURE TRANSDUCER (INST. RACK 4)	DEMO TRANSDUCER AND CABLING	D-4	
35426A51	PRESSURE TRANSDUCER (INST. RACK 4)	DEMO TRANSDUCER AND CABLING	D-4	
35426A52	DIFFERENTIAL PRESSURE TRANSDUCER (INST. RACK 4)	DEMO TRANSDUCER AND CABLING	D-4	
35426A53	PRESSURE TRANSDUCER (INST. RACK 4)	DEMO TRANSDUCER AND CABLING	D-4	
35426A54	PRESSURE TRANSDUCER (INST. RACK 4)	DEMO TRANSDUCER AND CABLING	D-4	
35426A55	DIFFERENTIAL PRESSURE TRANSDUCER (INST. RACK 4)	DEMO TRANSDUCER AND CABLING	D-4	
35426A56	PRESSURE TRANSDUCER (INST. RACK 4)	DEMO TRANSDUCER AND CABLING	D-4	
35427A101	SOUTH BLOWER MOTOR	DEMO AND REPLACE	C-7	
35427A102	SOUTH BLOWER OIL PUMP	DEMO AND REPLACE	D-7	
35427A103	STANDBY BLOWER MOTOR	DEMO AND REPLACE	D-6	
35427A104	STANDBY BLOWER OIL PUMP	DEMO AND REPLACE	D-6	
35427A105	LPAC BLOWER 1 MOTOR	DEMO AND REPLACE	C-6	
35427A106	NORTH BLOWER MOTOR	DEMO AND REPLACE	E-7	
35427A107	NORTH BLOWER OIL PUMP	DEMO AND REPLACE	E-7	
35427A108	LPAC 2 BLOWER MOTOR	DEMO AND REPLACE	C-6	
35427A23	SOUTH BLOWER CURRENT TRANSDUCER	DEMO AND REPLACE	C-7	
35427A24	SOUTH BLOWER MOTOR STARTER	DEMO AND REPLACE	C-7	
35427A25	STANDBY BLOWER CURRENT TRANSDUCER	DEMO AND REPLACE	D-6	
35427A26	STANDBY BLOWER MOTOR STARTER	DEMO AND REPLACE	D-6	
35427A28	LPAC BLOWER 1 CURRENT TRANSDUCER	DEMO AND REPLACE	C-6	
35427A29	LPAC BLOWER 1 MOTOR STARTER	DEMO AND REPLACE	C-6	
35427A42	NORTH BLOWER CURRENT TRANSDUCER	DEMO AND REPLACE	E-7	
35427A43	NORTH BLOWER MOTOR STARTER	DEMO AND REPLACE	E-7	
35427A45	LPAC BLOWER 2 CURRENT TRANSDUCER	DEMO AND REPLACE	C-6	
35427A46	LPAC BLOWER 2 MOTOR STARTER	DEMO AND REPLACE	C-6	
35433D3A1	CHILLER 1 DISCONNECT SWTCH	DEMO AND REPLACE (SEE ELECTRICAL DRAWINGS)	G-6	
35434D3A1	CHILLER 3 DISCONNECT SWITCH	DEMO AND REPLACE (SEE ELECTRICAL DRAWINGS)	G-4	
35435A104	WATER GLYCOL PUMP 1	DEMO AND REPLACE	G-3	
35435C1A1	NORTH STEAM BOILER DISCONNECT SWITCH	(SEE NOTES 8 ON THIS SHEET)	F-5	
35436A104	WATER GLYCOL PUMP 2	DEMO AND REPLACE	G-3	
35436E1A1	SOUTH STEAM BOILER DISCONNECT SWITCH	(SEE NOTES 8 ON THIS SHEET)	D-5	
35437A101	HEATER BANK	EQUIPMENT IS BEING DEMOED	D-4	
35437A102	HEATER BANK	EQUIPMENT IS BEING DEMOED	D-4	
35437A103	HEATER BANK	EQUIPMENT IS BEING DEMOED	F-4	
35437A104	HEATER BANK	EQUIPMENT IS BEING DEMOED	F-4	
35438A101	HEATER BANK	EQUIPMENT IS BEING DEMOED	F-4	
35438A104	HEATER BANK	EQUIPMENT IS BEING DEMOED	F-4	
35439A101	HEATER BANK	EQUIPMENT IS BEING DEMOED	D-4	
35439A102	HEATER BANK	EQUIPMENT IS BEING DEMOED	D-4	
35439A103	HEATER BANK	EQUIPMENT IS BEING DEMOED	E-4	
35439A104	HEATER BANK	EQUIPMENT IS BEING DEMOED	E-4	
35440A103	HEATER BANK	EQUIPMENT IS BEING DEMOED	C-4	
35440A104	HEATER BANK	EQUIPMENT IS BEING DEMOED	C-4	
35761A13	HUMIDITY TRANSDUCER	(SEE NOTES 8 AND 9 ON THIS SHEET)	E-5	
35761A14	HUMIDITY TRANSDUCER	(SEE NOTES 8 AND 9 ON THIS SHEET)	D-5	

NOTES:

1. UNLESS OTHERWISE NOTED ALL CABLES TO FIELD EQUIPMENT SLATED FOR DEMOLITION SHALL BE DEMOED BACK TO THE RESPECTIVE RIO DISTRIBUTION ENCLOSURE AND STORED FOR USE DURING THE NEW EQUIPMENT INSTALLATION.
2. CONTRACTOR SHALL REUSE IF LENGTH, AND TYPE PERMITS, ALL CABLES, BETWEEN RIO DISTRIBUTION ENCLOSURES AND FIELD DEVICES.
3. PRESSURE SWITCHES SHALL BE DEMOED DURING GLYCOL PUMP DEMOLITION. NEW SWITCHES SHALL BE PROVIDED DURING NEW GLYCOL PUMP INSTALLATION
4. RESERVOIR TANK SHALL BE REFURBISHED AND MODIFIED FOR NEW INSTRUMENTATION.
5. CONTROL VALVE IS TO BE DEMOED. DEMO EXISTING CONTROL CABLE BACK TO THE RIO DISTRIBUTION AND STORE FOR USE DURING INSTALLATION.
6. INSTRUMENT RACKS #1, #2, #3, AND #4 SHALL BE REUSED TO MOUNT NEW ECS INSTRUMENTATION DURING INSTALLATION.
7. CHILLER CONTROL CABINETS SHALL BE DEMOED WITH CHILLERS DURING CHILLER DEMOLITION. CONTRACTOR SHALL DEMO EXISTING CONTROL CABLING BACK TO THE RIO DISTRIBUTOR, CAREFULLY COIL, AND STORE FOR FUTURE USE DURING INSTALLATION.
8. EQUIPMENT IS BEING REFURBISHED AND REPLACED. CONTROL CABLING SHALL BE DISCONNECTED AT BOTH ENDS AND EQUIPMENT END SHALL BE COILED UP AND STORED IN CABLE TRAY FOR USE DURING INSTALLATION AS REFURBISHED EQUIPMENT CONTROLS.
9. COOLING CHAMBERS SHALL BE REFURBISHED AND MODIFIED FOR NEW INSTRUMENTATION.
10. EQUIPMENT IS BEING DEMOED. DEMO CONTROLS CABLING BACK TO RIO DISTRIBUTION.
11. CONTRACTOR SHALL COORDINATE ALL CONTROLS DEMOLITION WITH ALL OTHER DISCIPLINES AND PROVIDE A DEMOLITION PLAN FOR APPROVAL BY THE NASA CONTRACTING OFFICER, BEFORE CONTROLS DEMOLITION PLAN MAY BEGIN.

SYM	ZONE	DESCRIPTION	DATE	APPROVED
REVISIONS				

SIGNATURES		DATE
DRAWN	M. HENNIGH	3/07/14
CHECKED	J. WHITEFORD	3/07/14
SUBMITTED	S. RITTER	3/07/14
ST OF LICENSURE: TN LICENSE NO: 00110556		
APPROVED	G. WARD	3/07/14
	S. HUNT	3/07/14

JACOBS™
Jacobs Technology Inc.

NATIONAL AERONAUTICS AND SPACE ADMINISTRATION
JOHN F. KENNEDY SPACE CENTER, NASA
KENNEDY SPACE CENTER, FLORIDA

KSC LAUNCH PAD 39-B
ENVIRONMENTAL CONTROL SYSTEM (ECS) REFURBISHMENT
INSTRUMENTATION
EXISTING EQUIPMENT AND
DEMOLITION SCHEDULE SHEET 2

FILE NO.	SIZE	DWG.NO.	REV
I-004	F	79K39602	
PCN. NO. 98898		SHEET 87 OF 187	

F:\95452\DRAWINGS\INSTMTN\I-004.DWG
11-DEC-2013 10:40
HARDITOR

NASA PAD 39B – ECS ROOM EXISTING EQUIPMENT AND REFURBISHMENT SCHEDULE (CONTINUED)				
REF DES	DESCRIPTION	REFURBISHMENT PLAN	LOCATION (REFERENCE DRAWING I-006)	REFERENCE DRAWINGS
35761A15	VALVE POSITION INDICATOR (INST. RACK 5)	(SEE NOTE 7 ON THIS SHEET)	D-4	
35761A16	VALVE POSITION INDICATOR	(SEE NOTE 7 ON THIS SHEET)	C-5	
35761A17	TEMPERATURE TRANSDUCER	DEMO TRANSDUCER AND CABLING	F-2	
35761A18	HUMIDITY TRANSDUCER	DEMO TRANSDUCER AND CABLING	E-2	
35761A19	HUMIDITY TRANSDUCER	DEMO TRANSDUCER AND CABLING	F-2	
35761A20	VALVE POSITION INDICATOR	(SEE NOTE 7 ON THIS SHEET)	F-3	
35761A21	TEMPERATURE TRANSDUCER	DEMO TRANSDUCER AND CABLING	E-2	
35761A22	HUMIDITY TRANSDUCER	DEMO TRANSDUCER AND CABLING	E-2	
35761A23	HUMIDITY TRANSDUCER	DEMO TRANSDUCER AND CABLING	E-2	
35761A24	VALVE POSITION INDICATOR	(SEE NOTE 7 ON THIS SHEET)	E-3	
35761A25	TEMPERATURE TRANSDUCER	DEMO TRANSDUCER AND CABLING	E-2	
35761A26	TEMPERATURE TRANSDUCER	DEMO TRANSDUCER AND CABLING	D-2	
35761A27	TEMPERATURE TRANSDUCER	DEMO TRANSDUCER AND CABLING	D-2	
35761A28	HUMIDITY TRANSDUCER	DEMO TRANSDUCER AND CABLING	D-2	
35761A29	VALVE POSITION INDICATOR	(SEE NOTE 7 ON THIS SHEET)	D-3	
35761A30	TEMPERATURE TRANSDUCER	DEMO TRANSDUCER AND CABLING	D-2	
35761A31	HUMIDITY TRANSDUCER	DEMO TRANSDUCER AND CABLING	D-2	
35761A32	HUMIDITY TRANSDUCER	DEMO TRANSDUCER AND CABLING	C-3	
35761A33	VALVE POSITION INDICATOR	(SEE NOTE 7 ON THIS SHEET)	C-4	
35799A1	ECS POWER PANEL	POWER PANEL REMAINS	B-6	
35799A2	CHILLER 3 DISCONECT SWITCH	DEMO AND REPLACE (SEE ELECTRICAL DRAWINGS)	G-5	
37705-100	ECS CONTROL CONSOLE	CONSOLE REMAINS	B-3	

NASA PAD 39B – COOLING TOWER AREA EXISTING EQUIPMENT AND REFURBISHMENT SCHEDULE				
REF DES	DESCRIPTION	REFURBISHMENT PLAN	LOCATION (REFERENCE DRAWING I-007)	REFERENCE DRAWINGS
35441	COOLING TOWER DISTRIBUTOR	(SEE NOTE 5 ON THIS SHEET)	G-4	
35426A13	COOLING WATER VALVE POSITION CONVERTER	DEMO	G-6	
35435A101	CONDENSER WATER PUMP 1	DEMO AND REPLACE	F-4	
35435A102	COOLING TOWER FAN 1 MOTOR	DEMO AND REPLACE	F-8	
35435A103	COOLING TOWER FAN 2 MOTOR	DEMO AND REPLACE	F-7	
35435A6A1	CONDENSER WATER PUMP 1 DISCONNECT	DEMO AND REPLACE	G-4	
35435B4A1	COOLING TOWER FAN 2 DISCONNECT SWITCH	DEMO AND REPLACE	G-3	
35435B5A1	COOLING TOWER FAN 1 DISCONNECT SWITCH	DEMO AND REPLACE	G-3	
35436A101	CONDENSER WATER PUMP 2	DEMO AND REPLACE	E-4	
35436A102	COOLING TOWER FAN 3 MOTOR	DEMO AND REPLACE	F-6	
35436A6A1	CONDENSER WATER PUMP 2 DISCONNECT	DEMO AND REPLACE	G-3	
35436B6A1	COOLING TOWER FAN 3 DISCONNECT SWITCH	DEMO AND REPLACE	G-3	
35441A101	CONDENSER WATER PUMP 1 PRESSURE SWITCH	DEMO AND REPLACE	G-4	
35441A102	CONDENSER WATER PUMP 2 PRESSURE SWITCH	DEMO AND REPLACE	F-4	
35441A103	COOLING TOWER 3 VIBRATION SWITCH	DEMO – REPLACEMENT DEPENDS ON NEW EQUIPMENT	F-6	
35441A104	COOLING TOWER 2 VIBRATION SWITCH	DEMO – REPLACEMENT DEPENDS ON NEW EQUIPMENT	F-7	
35441A105	COOLING TOWER 1 VIBRATION SWITCH	DEMO – REPLACEMENT DEPENDS ON NEW EQUIPMENT	F-8	
35441A106	COOLING TOWER 3 OIL SWITCH	DEMO – REPLACEMENT DEPENDS ON NEW EQUIPMENT	F-6	
35441A107	COOLING TOWER 2 OIL SWITCH	DEMO – REPLACEMENT DEPENDS ON NEW EQUIPMENT	F-7	
35441A108	COOLING TOWER 1 OIL SWITCH	DEMO – REPLACEMENT DEPENDS ON NEW EQUIPMENT	F-8	

NOTES:

1. UNLESS OTHERWISE NOTED ALL CABLES TO FIELD EQUIPMENT SLATED FOR DEMOLITION SHALL BE DEMOED BACK TO THE RESPECTIVE RIO DISTRIBUTION ENCLOSURE AND STORED FOR USE DURING THE NEW EQUIPMENT INSTALLATION.
2. CONTRACTOR SHALL REUSE IF LENGTH, AND TYPE PERMITS, ALL CABLES, BETWEEN RIO DISTRIBUTION ENCLOSURES AND FIELD DEVICES.
3. INSTRUMENT RACKS #1, #2, #3, AND #4 SHALL BE REUSED TO MOUNT NEW ECS INSTRUMENTATION DURING INSTALLATION.
4. EQUIPMENT IS BEING REFURBISHED AND REPLACED. CONTROL CABLING SHALL BE DISCONNECTED AT BOTH ENDS AND EQUIPMENT END SHALL BE COILED UP AND STORED IN CABLE TRAY FOR USE DURING INSTALLATION AS REFURBISHED EQUIPMENT CONTROLS.
5. NEW CABLING SHALL BE INSTALLED FROM DISTRIBUTOR 35441 TO ALL NEW AND EXISTING COOLING TOWER EQUIPMENT AND CONTROLS.
6. CONTRACTOR SHALL COORDINATE ALL CONTROLS DEMOLITION WITH ALL OTHER DISCIPLINE AND PROVIDE A DEMOLITION PLAN FOR APPROVAL BY THE NASA CONTRACTING OFFICES. BEFORE CONTROLS DEMOLITION MAY BEGIN.
7. CONTROL VALVE IS TO BE DEMOED. DEMO EXISTING CONTROL CABLE BACK TO THE RIO DISTRIBUTOR, CAREFULLY COIL, AND STORE FOR USE DURING INSTALLATION.

SYM	ZONE	DESCRIPTION	DATE	APPROVED
REVISIONS				

JACOBS
Jacobs Technology Inc.

SIGNATURES		DATE
DRAWN	M. HENNIGH	3/07/14
CHECKED	J. WHITEFORD	3/07/14
SUBMITTED	S. RITTER	3/07/14
ST OF LICENSURE: TN LICENSE NO: 00110556		
APPROVED	G. WARD	3/07/14
	S. HUNT	3/07/14

NATIONAL AERONAUTICS AND SPACE ADMINISTRATION
JOHN F. KENNEDY SPACE CENTER, NASA
KENNEDY SPACE CENTER, FLORIDA

KSC LAUNCH PAD 39-B
ENVIRONMENTAL CONTROL SYSTEM (ECS) REFURBISHMENT
INSTRUMENTATION
EXISTING EQUIPMENT AND
DEMOLITION SCHEDULE SHEET 3

FILE NO.	SIZE	DWG.NO.	REV
	F	79K39602	
PCN. NO. 98898		SHEET 88 OF 187	

I-005

NOTES:

1. REFERENCE DRAWINGS M-001 THRU M-037 FOR PROCESS EQUIPMENT DEMOLITION AND REPLACEMENT DETAILS.
2. REFERENCE SHEETS I-009 THROUGH I-013 FOR NEW AND EXISTING CONTROLS EQUIPMENT INSTALLATION LOCATIONS.
3. REFERENCE I-008 FOR EXISTING CABLE TRAY AND CABLE TRAY MODIFICATIONS.
4. SOME PROCESS EQUIPMENT IDENTIFIED ON THIS LAYOUT DOES NOT EXIST. HOWEVER CONTROL CABLE HAS BEEN RUN TO THE APPROXIMATE LOCATIONS AND LEFT CURLED UP IN CABLE TRAY. REFERENCE SHEET I-003 TO I-005 FOR EQUIPMENT DEMO AND REFURBISHMENT NOTES.

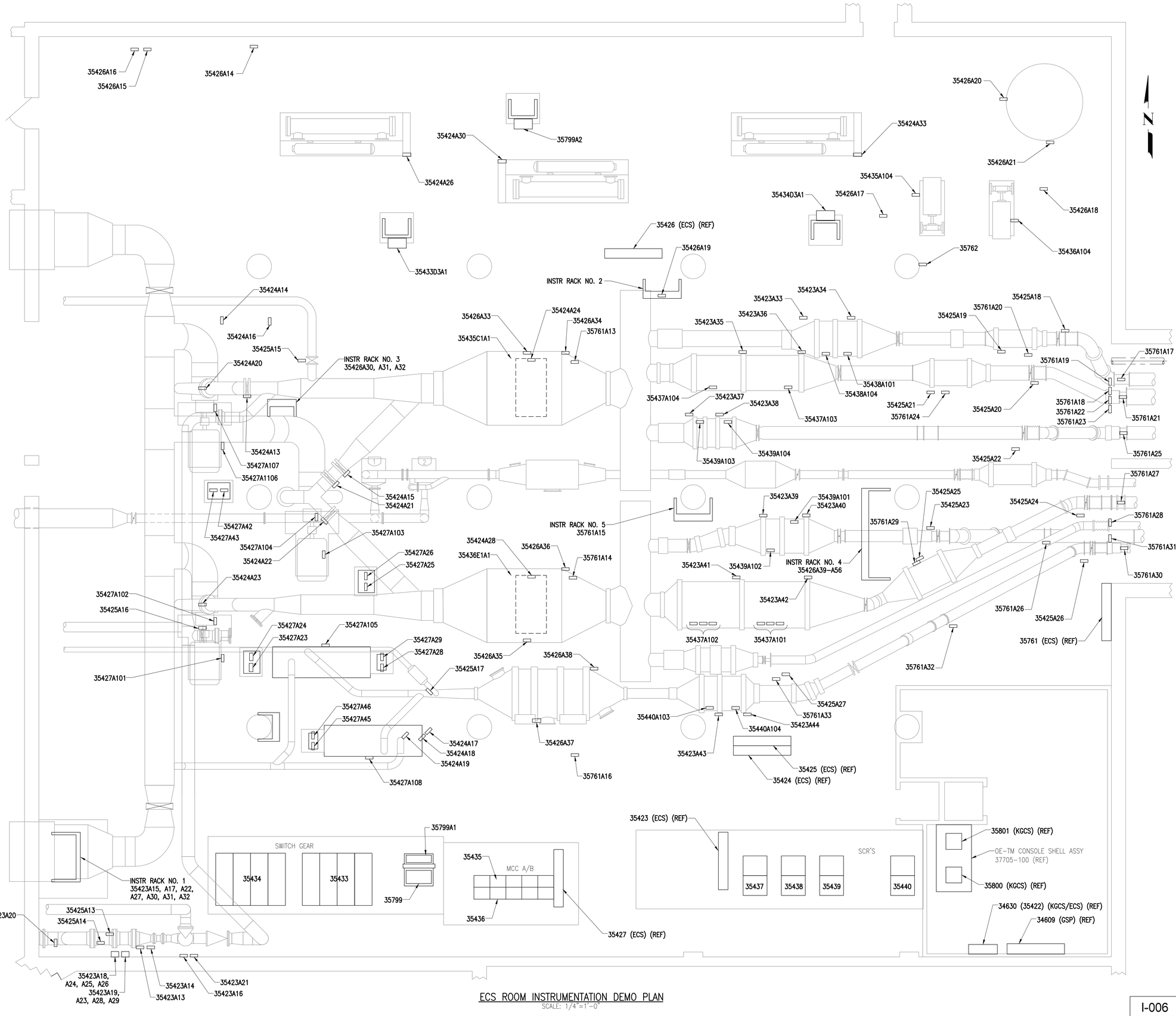

ECS ROOM INSTRUMENTATION DEMO PLAN
SCALE: 1/4"=1'-0"

SYM	ZONE	DESCRIPTION	DATE	APPROVED
		REVISIONS		

JACOBS
Jacobs Technology Inc.

SIGNATURES		DATE
DRAWN	M. HENNIGH	3/07/14
CHECKED	J. WHITEFORD	3/07/14
SUBMITTED	S. RITTER	3/07/14
ST OF LICENSURE: TN LICENSE NO: 00110556		
APPROVED	G. WARD	3/07/14
	S. HUNT	3/07/14

NATIONAL AERONAUTICS AND SPACE ADMINISTRATION
JOHN F. KENNEDY SPACE CENTER, NASA
KENNEDY SPACE CENTER, FLORIDA

KSC LAUNCH PAD 39-B
ENVIRONMENTAL CONTROL SYSTEM (ECS) REFURBISHMENT
INSTRUMENTATION
EXISTING EQUIPMENT LOCATIONS
AND DEMOLITION ECS ROOM

FILE NO.	SIZE	DWG.NO.	REV
	F	79K39602	
PCN. NO. 98898		SHEET 89 OF 187	

I-006

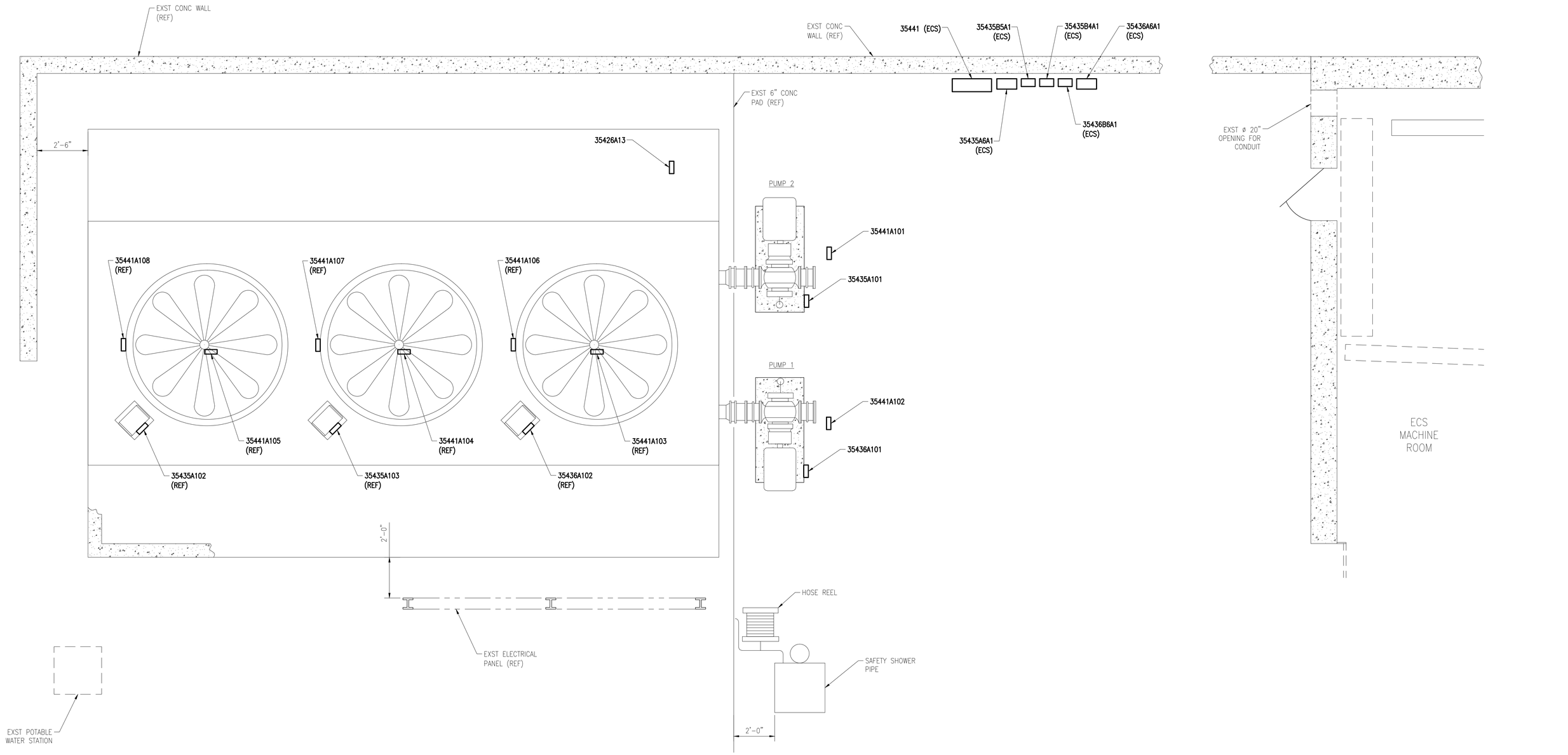

COOLING TOWER AREA INSTRUMENTATION EQUIPMENT DEMO PLAN

SCALE: 1/2" = 1'-0"

SYM	ZONE	DESCRIPTION	DATE	APPROVED
REVISIONS				

JACOBS
Jacobs Technology Inc.

SIGNATURES		DATE
DRAWN	M. HENNIGH	3/07/14
CHECKED	J. WHITEFORD	3/07/14
SUBMITTED	S. RITTER	3/07/14
ST OF LICENSURE: TN LICENSE NO: 00110556		
APPROVED	G. WARD	3/07/14
	S. HUNT	3/07/14

NATIONAL AERONAUTICS AND SPACE ADMINISTRATION
JOHN F. KENNEDY SPACE CENTER, NASA
KENNEDY SPACE CENTER, FLORIDA

KSC LAUNCH PAD 39-B
ENVIRONMENTAL CONTROL SYSTEM (ECS) REFURBISHMENT
INSTRUMENTATION
EXISTING EQUIPMENT LOCATIONS
AND DEMOLITION COOLING TOWER AREA

FILE NO.	SIZE	DWG.NO.	REV
I-007	F	79K39602	
PCN. NO. 98898		SHEET 90 OF 187	

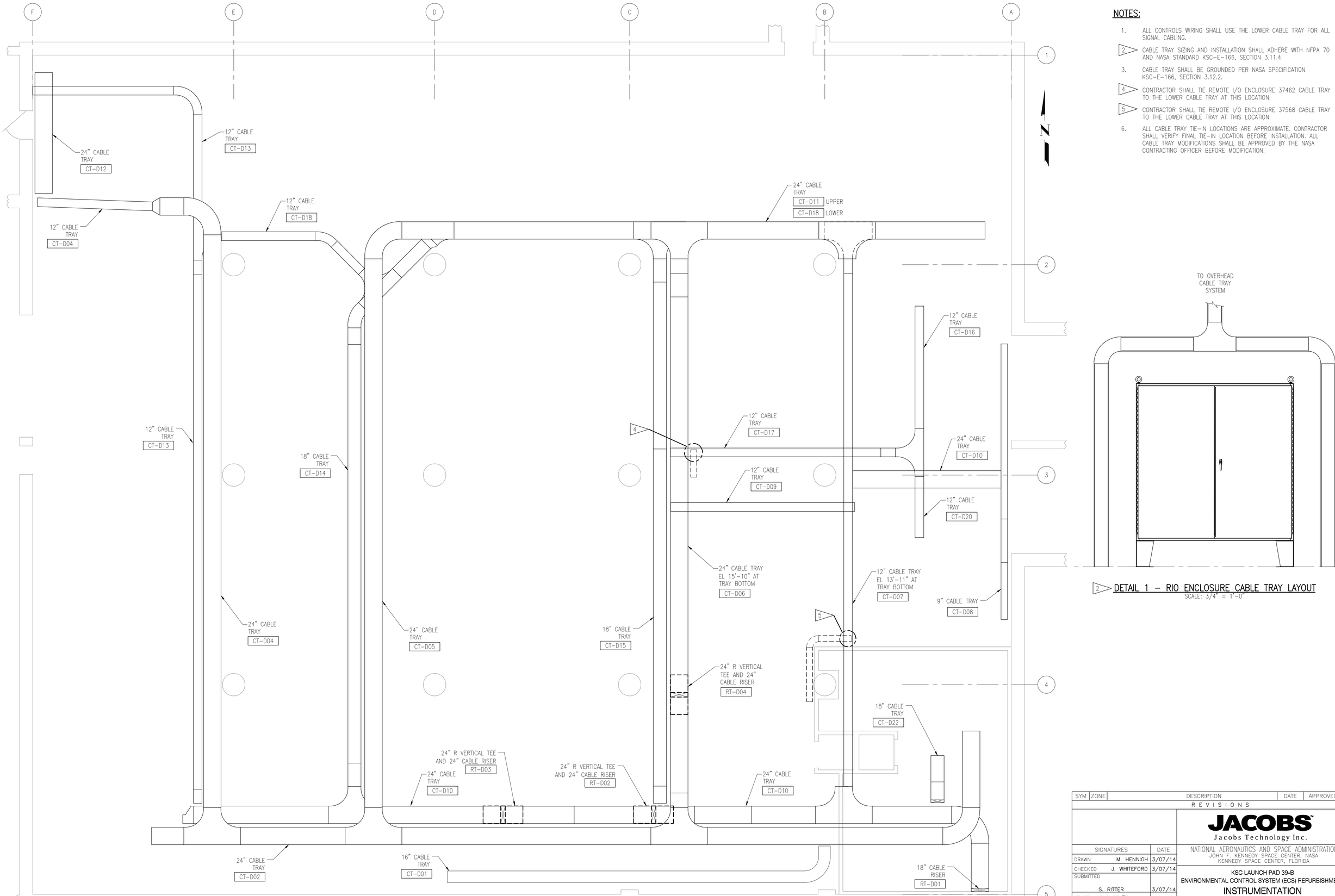

NOTES:

1. ALL CONTROLS WIRING SHALL USE THE LOWER CABLE TRAY FOR ALL SIGNAL CABLING.
2. CABLE TRAY SIZING AND INSTALLATION SHALL ADHERE WITH NFPA 70 AND NASA STANDARD KSC-E-166, SECTION 3.11.4.
3. CABLE TRAY SHALL BE GROUNDED PER NASA SPECIFICATION KSC-E-166, SECTION 3.12.2.
4. CONTRACTOR SHALL TIE REMOTE I/O ENCLOSURE 37462 CABLE TRAY TO THE LOWER CABLE TRAY AT THIS LOCATION.
5. CONTRACTOR SHALL TIE REMOTE I/O ENCLOSURE 37568 CABLE TRAY TO THE LOWER CABLE TRAY AT THIS LOCATION.
6. ALL CABLE TRAY TIE-IN LOCATIONS ARE APPROXIMATE. CONTRACTOR SHALL VERIFY FINAL TIE-IN LOCATION BEFORE INSTALLATION. ALL CABLE TRAY MODIFICATIONS SHALL BE APPROVED BY THE NASA CONTRACTING OFFICER BEFORE MODIFICATION.

2 DETAIL 1 – RIO ENCLOSURE CABLE TRAY LAYOUT
SCALE: 3/4" = 1'-0"

ECS ROOM CABLE TRAY PLAN
SCALE: 1/4"=1'-0"

SYM	ZONE	DESCRIPTION	DATE	APPROVED
REVISIONS				

JACOBS
Jacobs Technology Inc.

SIGNATURES		DATE
DRAWN	M. HENNIGH	3/07/14
CHECKED	J. WHITEFORD	3/07/14
SUBMITTED	S. RITTER	3/07/14
ST OF LICENSURE: TN LICENSE NO: 00110556		
APPROVED	G. WARD	3/07/14
	S. HUNT	3/07/14

NATIONAL AERONAUTICS AND SPACE ADMINISTRATION
JOHN F. KENNEDY SPACE CENTER, NASA
KENNEDY SPACE CENTER, FLORIDA

KSC LAUNCH PAD 39-B
ENVIRONMENTAL CONTROL SYSTEM (ECS) REFURBISHMENT
INSTRUMENTATION
EXISTING CABLE TRAY LOCATIONS
& NEW INSTALLATION LOCATIONS

FILE NO.	SIZE	DWG.NO.	REV
	F	79K39602	
PCN. NO. 98898		SHEET 91 OF 187	

I-008

NASA PAD 39B – ECS ROOM EQUIPMENT AND NEW EQUIPMENT SCHEDULE

REF DES	EQUIPMENT	DESCRIPTION	LOCATION (REF. SHEET I-012)	REFERENCE SHEETS
34609	GSP LOCAL POWER DISTRIBUTOR	DISTRIBUTOR REMAINS – WITH NO MODIFICATIONS	A-3	
34630 (35422)	KGCS/ECS LOCAL CONTROL DISTRIBUTOR	LOCAL CONTROL DISTRIBUTOR TO REMAIN WITH NO MODIFICATION	A-3	
35423	REMOTE I/O DISTRIBUTOR	ENCLOSURE AND WIRING TO BE MODIFIED	B-4	
35424	REMOTE I/O DISTRIBUTOR		C-4	
35425	REMOTE I/O DISTRIBUTOR		C-4	
35426	REMOTE I/O DISTRIBUTOR		F-5	
35427	REMOTE I/O DISTRIBUTOR		B-5	
35433	SWITCH-GEAR (SG 1)		B-6	E-004
35434	SWITCH-GEAR (SG 2)		B-7	E-005
35435	MOTOR CONTROL CENTER (MCC A)		B-6	E-004
35436	MOTOR CONTROL CENTER (MCC B)		B-6	E-004
35754	MOTOR CONTROL CENTER (MCC C)		B-6	E-005
35755	MOTOR CONTROL CENTER (MCC D)		B-6	E-005
37462	REMOTE I/O DISTRIBUTOR	ECS ROOM I/O DISTRIBUTION ENCLOSURE	E-4	
37568	110VAC DISTRIBUTOR	110VAC REGULATED AND UNREGULATED POWER DISTRIBUTION ENCLOSURE	C-4	
35431	REDUNDANT PLC CONTROL SYSTEM	CONTRACTOR SUPPLIED REDUNDANT PLC ENCLOSURE	B-3	
35761	REMOTE I/O DISTRIBUTOR		D-2	
35762	LOCAL PUMP CONTROL SWITCH		F-3	
35799	AUTO-XFER SWITCH (SWITCHGEARS)		B-6	
35800	SCADA PC 1	REMAINS WITH NO MODIFICATIONS	B-3	
35801	SCADA PC 2	REMAINS WITH NO MODIFICATIONS	B-3	
35803	VERIFICATION SCADA & PC	CONTRACTOR SUPPLIED PC AND SCADA SYSTEM	B-3	
35423B1	PRV-702A	GN2 PRESSURE REGULATOR	A-8	I-016 THRU I-022
35423B2	SCR-261-1	HEATER SCR CONTROLLER	B-4	I-016 THRU I-022
35423B3	SCR-261-2	HEATER SCR CONTROLLER	B-4	I-016 THRU I-022
35423B4	OTS-231A	HEATER OVER TEMPERATURE SWITCH	E-5	I-016 THRU I-022
35423B5	OTS-231B	HEATER OVER TEMPERATURE SWITCH	E-4	I-016 THRU I-022
35423B6	OTS-201A	HEATER OVER TEMPERATURE SWITCH	F-4	I-016 THRU I-022
35423B7	OTS-201B	HEATER OVER TEMPERATURE SWITCH	F-4	I-016 THRU I-022
35423B8	OTS-211A	HEATER OVER TEMPERATURE SWITCH	F-5	I-016 THRU I-022
35423B9	OTS-211B	HEATER OVER TEMPERATURE SWITCH	F-4	I-016 THRU I-022
35423B10	OTS-221A	HEATER OVER TEMPERATURE SWITCH	E-5	I-016 THRU I-022
35423B11	OTS-221B	HEATER OVER TEMPERATURE SWITCH	E-4	I-016 THRU I-022
35423B12	OTS-251A	HEATER OVER TEMPERATURE SWITCH	D-5	I-016 THRU I-022
35423B13	OTS-251B	HEATER OVER TEMPERATURE SWITCH	D-4	I-016 THRU I-022
35423B14	OTS-261A	HEATER OVER TEMPERATURE SWITCH	D-4	I-016 THRU I-022
35423B15	OTS-261B	HEATER OVER TEMPERATURE SWITCH	D-4	I-016 THRU I-022
35423B16	OTS-301A	HEATER OVER TEMPERATURE SWITCH	C-4	I-016 THRU I-022
35423B17	OTS-301B	HEATER OVER TEMPERATURE SWITCH	C-4	I-016 THRU I-022
35423B18	SCR-221-1	HEATER SCR CONTROLLER	B-4	I-016 THRU I-022
35423B19	SCR-221-2	HEATER SCR CONTROLLER	B-4	I-016 THRU I-022
35423B20	SCR-251-1	HEATER SCR CONTROLLER	B-4	I-016 THRU I-022
35423B21	SCR-251-2	HEATER SCR CONTROLLER	B-4	I-016 THRU I-022
35423B22	SCR-211-1	HEATER SCR CONTROLLER	B-4	I-016 THRU I-022
35423B23	SCR-211-2	HEATER SCR CONTROLLER	B-4	I-016 THRU I-022
35423B24	SCR-301-1	HEATER SCR CONTROLLER	B-4	I-016 THRU I-022
35423B25	SCR-301-2	HEATER SCR CONTROLLER	B-4	I-016 THRU I-022
35423B26	SCR-231-1	HEATER SCR CONTROLLER	B-4	I-016 THRU I-022
35423B27	SCR-231-2	HEATER SCR CONTROLLER	B-4	I-016 THRU I-022
35423B28	SCR-201-1	HEATER SCR CONTROLLER	B-4	I-016 THRU I-022
35423B29	SCR-201-2	HEATER SCR CONTROLLER	B-4	I-016 THRU I-022
35423B30	SCR-271-1	HEATER SCR CONTROLLER	B-4	I-016 THRU I-022
35423B31	SCR-271-2	HEATER SCR CONTROLLER	B-4	I-016 THRU I-022
35423B32	OTS-271A	HEATER OVER TEMPERATURE SWITCH	D-5	I-016 THRU I-022
35423B33	OTS-271B	HEATER OVER TEMPERATURE SWITCH	D-4	I-016 THRU I-022
35423B34	SCR-311-1	(SPARE DUCT OPTION) HEATER SCR CONTROLLER	B-4	I-016 THRU I-022
35423B35	SCR-241-1	(SPARE DUCT OPTION) HEATER SCR CONTROLLER	B-4	I-016 THRU I-022
35423B36	SCR-281-1	(SPARE DUCT OPTION) HEATER SCR CONTROLLER	B-4	I-016 THRU I-022
35423B37	SCR-291-1	(SPARE DUCT OPTION) HEATER SCR CONTROLLER	B-4	I-016 THRU I-022
35423B38	SCR-311-2	(SPARE DUCT OPTION) HEATER SCR CONTROLLER	B-4	I-016 THRU I-022
35423B39	SCR-241-2	(SPARE DUCT OPTION) HEATER SCR CONTROLLER	B-4	I-016 THRU I-022
35423B40	SCR-281-2	(SPARE DUCT OPTION) HEATER SCR CONTROLLER	B-4	I-016 THRU I-022
35423B41	SCR-291-2	(SPARE DUCT OPTION) HEATER SCR CONTROLLER	B-4	I-016 THRU I-022
35423B42	OTS-241A	(SPARE DUCT OPTION) OVER TEMPERATURE SWITCH	E-4	I-016 THRU I-022
35423B43	OTS-281A	(SPARE DUCT OPTION) OVER TEMPERATURE SWITCH	C-4	I-016 THRU I-022
35423B44	OTS-291A	(SPARE DUCT OPTION) OVER TEMPERATURE SWITCH	C-5	I-016 THRU I-022
35423B45	OTS-311A	(SPARE DUCT OPTION) OVER TEMPERATURE SWITCH	C-4	I-016 THRU I-022
35423B46	OTS-241B	(SPARE DUCT OPTION) OVER TEMPERATURE SWITCH	E-4	I-016 THRU I-022
35423B47	OTS-281B	(SPARE DUCT OPTION) OVER TEMPERATURE SWITCH	C-4	I-016 THRU I-022
35423B48	OTS-291B	(SPARE DUCT OPTION) OVER TEMPERATURE SWITCH	C-4	I-016 THRU I-022
35423B49	OTS-311B	(SPARE DUCT OPTION) OVER TEMPERATURE SWITCH	C-4	I-016 THRU I-022
35423B50	PRV-702B	GN2 PRESSURE REGULATOR	A-8	I-016 THRU I-022
35424A20	MOV-008	NORTH BLOWER DISCHARGE VALVE	E-7	I-023 THRU I-029
35424A21	MOV-011	STANDBY BLOWER NORTH DISCHARGE VALVE	E-6	I-023 THRU I-029
35424A22	MOV-012	STANDBY BLOWER SOUTH DISCHARGE VALVE	D-7	I-023 THRU I-029
35424A23	MOV-013	SOUTH BLOWER DISCHARGE VALVE	D-7	I-023 THRU I-029
35424A24	NBO-601	NORTH STEAM BOILER	F-5	I-023 THRU I-029
35424A26	CH-1	CHILLER 1 CONTROL CABINET	G-6	I-023 THRU I-029
35424A28	SBO-602	SOUTH STEAM BOILER	D-5	I-023 THRU I-029
35424A30	CH-2	CHILLER 2 CONTROL CABINET	G-5	I-023 THRU I-029
35424A33	CH-3	CHILLER 3 CONTROL CABINET	G-4	I-023 THRU I-029
35425B1	FCV-205	FLOW CONTROL VALVE (AIR)	F-4	I-030 THRU I-036
35425B2	FCV-215	FLOW CONTROL VALVE (AIR)	F-3	I-030 THRU I-036
35425B3	FCV-225	FLOW CONTROL VALVE (AIR)	E-3	I-030 THRU I-036
35425B4	FCV-235	FLOW CONTROL VALVE (AIR)	E-3	I-030 THRU I-036
35425B5	FCV-255	FLOW CONTROL VALVE (AIR)	D-4	I-030 THRU I-036
35425B6	FCV-265	FLOW CONTROL VALVE (AIR)	D-4	I-030 THRU I-036
35425B7	FCV-275	FLOW CONTROL VALVE (AIR)	D-3	I-030 THRU I-036
35425B8	FCV-305	FLOW CONTROL VALVE (AIR)	D-3	I-030 THRU I-036
35425B9	FCV-213A	FLOW CONTROL VALVE (HUMIDITY)	F-4	I-030 THRU I-036
35425B10	FCV-213B	FLOW CONTROL VALVE (HUMIDITY)	F-4	I-030 THRU I-036
35425B11	FCV-223A	FLOW CONTROL VALVE (HUMIDITY)	E-4	I-030 THRU I-036
35425B12	FCV-223B	FLOW CONTROL VALVE (HUMIDITY)	E-4	I-030 THRU I-036
35425B13	FCV-233A	FLOW CONTROL VALVE (HUMIDITY)	E-4	I-030 THRU I-036
35425B14	FCV-233B	FLOW CONTROL VALVE (HUMIDITY)	E-4	I-030 THRU I-036
35425B15	FCV-273A	FLOW CONTROL VALVE (HUMIDITY)	D-4	I-030 THRU I-036

NOTES:

1. EXISTING CONTROL DISTRIBUTOR CONTROLNET NETWORK CABLING SHALL BE DISCONNECTED FROM THE ECS REMOTE I/O ENCLOSURES AT THE CONTROL DISTRIBUTOR. THE CONTRACTOR SHALL INTERFACE THE CONTRACTOR SUPPLIED REDUNDANT PLC CONTROL SYSTEM TO THE ECS REMOTE I/O ENCLOSURES USING THE EXISTING CONNECTORIZED CABLES WHICH HAVE BEEN DISCONNECTED FROM THE CONTROL DISTRIBUTOR. SEE SHEET I-015 FOR NETWORK INTERCONNECTION DETAILS.
2. EXISTING SCADA PC'S 1 AND 2 REMAIN WITH NO MODIFICATION. THE CONTRACTOR SUPPLIED PC AND FACTORY TALK VIEW SCADA SHALL BE TEMPORARILY LOCATED ON THE EXISTING ECS ROOM CONTROL CONSOLE DURING VERIFICATION, VALIDATION, AND ACCEPTANCE TESTING. THE CONTRACTOR SUPPLIED PC AND SCADA SYSTEM SHALL BE CONNECTED TO THE CONTRACTOR SUPPLIED REDUNDANT PLC CONTROL SYSTEM USING ETHERNET. REFERENCE SHEETS I-012 AND I-015 FOR DETAILS.

SYM	ZONE	DESCRIPTION	DATE	APPROVED
		REVISIONS		

JACOBS™
Jacobs Technology Inc.

SIGNATURES		DATE
DRAWN	M. HENNIGH	3/07/14
CHECKED	J. WHITEFORD	3/07/14
SUBMITTED	S. RITTER	3/07/14
ST OF LICENSURE: TN LICENSE NO: 00110556		
APPROVED	G. WARD	3/07/14
	S. HUNT	3/07/14

NATIONAL AERONAUTICS AND SPACE ADMINISTRATION
JOHN F. KENNEDY SPACE CENTER, NASA
KENNEDY SPACE CENTER, FLORIDA

KSC LAUNCH PAD 39-B
ENVIRONMENTAL CONTROL SYSTEM (ECS) REFURBISHMENT
INSTRUMENTATION
NEW EQUIPMENT SCHEDULE
SHEET 1

I-009

FILE NO.	SIZE	DWG.NO.	REV
	F	79K39602	
PCN. NO. 98898		SHEET 92 OF 187	

NASA PAD 39B – ECS ROOM EQUIPMENT AND NEW EQUIPMENT SCHEDULE (CONTINUED FROM SHEET I-009)

REF DES	EQUIPMENT	DESCRIPTION	LOCATION (REF. SHEET I-012)	REFERENCE SHEETS
35425B16	FCV-273B	FLOW CONTROL VALVE (HUMIDITY)	D-4	I-030 THRU I-036
35425B17	FCV-303A	FLOW CONTROL VALVE (HUMIDITY)	C-4	I-030 THRU I-036
35425B18	FCV-303B	FLOW CONTROL VALVE (HUMIDITY)	D-4	I-030 THRU I-036
35425B19	FCV-245	(SPARE DUCT OPTION) FLOW CONTROL VALVE (AIR)	E-3	I-030 THRU I-036
35425B20	FCV-285	(SPARE DUCT OPTION) FLOW CONTROL VALVE (AIR)	D-3	I-030 THRU I-036
35425B21	FCV-295	(SPARE DUCT OPTION) FLOW CONTROL VALVE (AIR)	C-3	I-030 THRU I-036
35425B22	FCV-315	(SPARE DUCT OPTION) FLOW CONTROL VALVE (AIR)	C-3	I-030 THRU I-036
35426B1	SOV-214A	ISOLATION SOLENOID VALVE	F-4	I-037 THRU I-043
35426B2	DPT-417A	DIFFERENTIAL PRESSURE TRANSDUCER	H-7	I-037 THRU I-043
35426B3	TE-414A	RTD	H-8	I-037 THRU I-043
35426B4	TE-414B	RTD	H-8	I-037 THRU I-043
35426B5	PS-513	PRESSURE SWITCH	G-3	I-037 THRU I-043
35426B6	PS-514	PRESSURE SWITCH	G-3	I-037 THRU I-043
35426B7	DPT-516A	DIFFERENTIAL PRESSURE TRANSDUCER	F-3	I-037 THRU I-043
35426B8	TE-506B	RTD	G-3	I-037 THRU I-043
35426B9	TE-506A	RTD	G-3	I-037 THRU I-043
35426B10	SOV-214B	ISOLATION SOLENOID VALVE	F-4	I-037 THRU I-043
35426B11	SOV-224A	ISOLATION SOLENOID VALVE	E-4	I-037 THRU I-043
35426B12	SOV-224B	ISOLATION SOLENOID VALVE	E-4	I-037 THRU I-043
35426B13	DPT-417B	DIFFERENTIAL PRESSURE TRANSDUCER	H-7	I-037 THRU I-043
35426B14	PT-505A	PRESSURE TRANSDUCER	G-3	I-037 THRU I-043
35426B15	SOV-234A	ISOLATION SOLENOID VALVE	E-4	I-037 THRU I-043
35426B16	SOV-234B	ISOLATION SOLENOID VALVE	E-4	I-037 THRU I-043
35426B17	PT-101A	PRESSURE TRANSDUCER	E-6	I-037 THRU I-043
35426B18	PT-101B	PRESSURE TRANSDUCER	E-6	I-037 THRU I-043
35426B19	PT-111B	PRESSURE TRANSDUCER	D-6	I-037 THRU I-043
35426B20	TE-102A	RTD	E-6	I-037 THRU I-043
35426B21	TE-103A	RTD	F-5	I-037 THRU I-043
35426B22	TE-113A	RTD	D-5	I-037 THRU I-043
35426B23	TE-112A	RTD	D-6	I-037 THRU I-043
35426B24	TE-122A	RTD	C-6	I-037 THRU I-043
35426B25	TE-123A	RTD	C-5	I-037 THRU I-043
35426B26	PT-111A	PRESSURE TRANSDUCER	D-6	I-037 THRU I-043
35426B27	DPT-516B	DIFFERENTIAL PRESSURE TRANSDUCER	F-3	I-037 THRU I-043
35426B28	PT-121A	PRESSURE TRANSDUCER	C-6	I-037 THRU I-043
35426B29	PT-121B	PRESSURE TRANSDUCER	C-6	I-037 THRU I-043
35426B30	TE-113B	RTD	D-5	I-037 THRU I-043
35426B31	TE-122B	RTD	C-6	I-037 THRU I-043
35426B32	TE-112B	RTD	D-6	I-037 THRU I-043
35426B33	TE-123B	RTD	C-5	I-037 THRU I-043
35426B34	PT-505B	PRESSURE TRANSDUCER	G-3	I-037 THRU I-043
35426B35	TE-103B	RTD	F-5	I-037 THRU I-043
35426B36	TE-102B	RTD	E-6	I-037 THRU I-043
35426B37	DPT-207A	DIFFERENTIAL PRESSURE TRANSDUCER	E-2	I-037 THRU I-043
35426B38	DPT-207B	DIFFERENTIAL PRESSURE TRANSDUCER	E-2	I-037 THRU I-043
35426B39	PT-208A	PRESSURE TRANSDUCER	E-2	I-037 THRU I-043
35426B40	PT-208B	PRESSURE TRANSDUCER	E-2	I-037 THRU I-043
35426B41	DPT-217A	DIFFERENTIAL PRESSURE TRANSDUCER	E-2	I-037 THRU I-043
35426B42	DPT-217B	DIFFERENTIAL PRESSURE TRANSDUCER	E-2	I-037 THRU I-043
35426B43	PT-218A	PRESSURE TRANSDUCER	E-2	I-037 THRU I-043
35426B44	PT-218B	PRESSURE TRANSDUCER	E-2	I-037 THRU I-043
35426B45	DPT-227A	DIFFERENTIAL PRESSURE TRANSDUCER	E-2	I-037 THRU I-043
35426B46	DPT-227B	DIFFERENTIAL PRESSURE TRANSDUCER	E-2	I-037 THRU I-043
35426B47	PT-228A	PRESSURE TRANSDUCER	E-2	I-037 THRU I-043
35426B48	PT-228B	PRESSURE TRANSDUCER	E-2	I-037 THRU I-043
35427B4	P-511	PUMP	G-3	I-044 THRU I-050
35427B9	P-512	PUMP	G-3	I-044 THRU I-050
35427B10	H-221-1	HEATER	E-5	I-044 THRU I-050
35427B11	H-251-1	HEATER	D-5	I-044 THRU I-050
35427B12	H-211-1	HEATER	F-5	I-044 THRU I-050
35427B13	H-261-1	HEATER	E-5	I-044 THRU I-050
35427B14	H-301-1	HEATER	C-4	I-044 THRU I-050
35427B15	SB-003	BLOWER	D-7	I-044 THRU I-050
35427B16	RB-002	BLOWER	D-6	I-044 THRU I-050
35427B17	H-231-1	HEATER	E-5	I-044 THRU I-050
35427B18	LB-004	BLOWER	C-6	I-044 THRU I-050
35427B19	H-201-1	HEATER	F-4	I-044 THRU I-050
35427B20	H-271-1	HEATER	D-4	I-044 THRU I-050
35427B21	H-221-2	HEATER	E-4	I-044 THRU I-050
35427B22	H-301-2	HEATER	C-4	I-044 THRU I-050
35427B23	H-251-2	HEATER	D-5	I-044 THRU I-050
35427B24	H-211-2	HEATER	F-4	I-044 THRU I-050
35427B25	NB-001	BLOWER	E-7	I-044 THRU I-050
35427B26	H-231-2	HEATER	E-5	I-044 THRU I-050
35427B27	LRB-005	BLOWER	C-7	I-044 THRU I-050
35427B28	H-201-2	HEATER	F-4	I-044 THRU I-050
35427B29	H-261-2	HEATER	D-4	I-044 THRU I-050
35427B30	H-271-2	HEATER	D-4	I-044 THRU I-050
35427B31	H-241-1	(SPARE DUCT OPTION) HEATER	E-4	I-044 THRU I-050
35427B32	H-281-1	(SPARE DUCT OPTION) HEATER	D-4	I-044 THRU I-050
35427B33	H-291-1	(SPARE DUCT OPTION) HEATER	C-4	I-044 THRU I-050
35427B34	H-311-1	(SPARE DUCT OPTION) HEATER	C-4	I-044 THRU I-050
35427B35	H-241-2	(SPARE DUCT OPTION) HEATER	E-4	I-044 THRU I-050
35427B36	H-281-2	(SPARE DUCT OPTION) HEATER	D-4	I-044 THRU I-050
35427B37	H-291-2	(SPARE DUCT OPTION) HEATER	C-4	I-044 THRU I-050
35427B38	H-311-2	(SPARE DUCT OPTION) HEATER	C-4	I-044 THRU I-050
35761B1	MT-104A	HUMIDITY TRANSDUCER	E-5	I-051 THRU I-057
35761B2	MT-104B	HUMIDITY TRANSDUCER	E-5	I-051 THRU I-057
35761B3	MT-114A	HUMIDITY TRANSDUCER	D-5	I-051 THRU I-057
35761B4	MT-216B / TT-216B	HUMIDITY AND TEMPERATURE TRANSDUCER	F-3	I-051 THRU I-057

SYM	ZONE	DESCRIPTION	DATE	APPROVED
REVISIONS				

JACOBS
Jacobs Technology Inc.

SIGNATURES		DATE
DRAWN	M. HENNIGH	3/07/14
CHECKED	J. WHITEFORD	3/07/14
SUBMITTED	S. RITTER	3/07/14
ST OF LICENSURE: TN LICENSE NO: 00110556		
APPROVED	G. WARD	3/07/14
	S. HUNT	3/07/14

NATIONAL AERONAUTICS AND SPACE ADMINISTRATION
JOHN F. KENNEDY SPACE CENTER, NASA
KENNEDY SPACE CENTER, FLORIDA

KSC LAUNCH PAD 39-B
ENVIRONMENTAL CONTROL SYSTEM (ECS) REFURBISHMENT
INSTRUMENTATION
NEW EQUIPMENT SCHEDULE
SHEET 2

I-010

FILE NO. | SIZE F | DWG.NO. 79K39602 | REV

PCN. NO. 98898 | SHEET 93 OF 187

NASA PAD 39B – ECS ROOM EQUIPMENT AND NEW EQUIPMENT SCHEDULE (CONTINUED FROM SHEET I-010)

REF DES	EQUIPMENT	DESRIPTION	LOCATION (REF. SHEET I-012)	REFERENCE SHEETS
35761B5	MT-216A / TT-216A	HUMIDITY AND TEMPERATURE TRANSDUCER	F-3	I-051 THRU I-057
35761B6	MT-206A / TT-206A	HUMIDITY AND TEMPERATURE TRANSDUCER	F-3	I-051 THRU I-057
35761B7	MT-206B / TT-206B	HUMIDITY AND TEMPERATURE TRANSDUCER	F-3	I-051 THRU I-057
35761B8	MT-114B	HUMIDITY TRANSDUCER	D-5	I-051 THRU I-057
35761B9	MT-276A / TT-276A	HUMIDITY AND TEMPERATURE TRANSDUCER	D-3	I-051 THRU I-057
35761B10	MT-226B / TT-226B	HUMIDITY AND TEMPERATURE TRANSDUCER	E-3	I-051 THRU I-057
35761B11	MT-226A / TT-226A	HUMIDITY AND TEMPERATURE TRANSDUCER	E-3	I-051 THRU I-057
35761B12	MT-306A / TT-306A	HUMIDITY AND TEMPERATURE TRANSDUCER	D-3	I-051 THRU I-057
35761B13	MT-236A / TT-236A	HUMIDITY AND TEMPERATURE TRANSDUCER	E-3	I-051 THRU I-057
35761B14	MT-236B / TT-236B	HUMIDITY AND TEMPERATURE TRANSDUCER	E-3	I-051 THRU I-057
35761B15	MT-256A / TT-256A	HUMIDITY AND TEMPERATURE TRANSDUCER	D-4	I-051 THRU I-057
35761B16	MT-256B / TT-256B	HUMIDITY AND TEMPERATURE TRANSDUCER	D-4	I-051 THRU I-057
35761B17	MT-276B / TT-276B	HUMIDITY AND TEMPERATURE TRANSDUCER	D-3	I-051 THRU I-057
35761B18	MT-266A / TT-266A	HUMIDITY AND TEMPERATURE TRANSDUCER	D-3	I-051 THRU I-057
35761B19	MT-266B / TT-266B	HUMIDITY AND TEMPERATURE TRANSDUCER	D-3	I-051 THRU I-057
35761B20	MT-306B / TT-306B	HUMIDITY AND TEMPERATURE TRANSDUCER	D-3	I-051 THRU I-057
35761B21	MT-124A	HUMIDITY TRANSDUCER	C-5	I-051 THRU I-057
35761B22	MT-124B	HUMIDITY TRANSDUCER	C-5	I-051 THRU I-057
35761B23	DPT-237A	DIFFERENTIAL PRESSURE TRANSDUCER	E-2	I-051 THRU I-057
35761B24	DPT-237B	DIFFERENTIAL PRESSURE TRANSDUCER	E-2	I-051 THRU I-057
35761B25	PT-238A	PRESSURE TRANSDUCER	E-2	I-051 THRU I-057
35761B26	PT-238B	PRESSURE TRANSDUCER	E-2	I-051 THRU I-057
35761B27	DPT-257A	DIFFERENTIAL PRESSURE TRANSDUCER	E-2	I-051 THRU I-057
35761B28	DPT-257B	DIFFERENTIAL PRESSURE TRANSDUCER	E-2	I-051 THRU I-057
35761B29	PT-258A	PRESSURE TRANSDUCER	E-2	I-051 THRU I-057
35761B30	PT-258B	PRESSURE TRANSDUCER	E-2	I-051 THRU I-057
35761B31	SOV-274A	ISOLATION SOLENOID VALVE	D-4	I-051 THRU I-057
35761B32	SOV-274B	ISOLATION SOLENOID VALVE	D-4	I-051 THRU I-057
35761B33	SOV-304A	ISOLATION SOLENOID VALVE	C-4	I-051 THRU I-057
35761B34	SOV-304B	ISOLATION SOLENOID VALVE	D-4	I-051 THRU I-057
35761B35	MT-246A / TT-246A	(SPARE DUCT OPTION) HUMIDITY AND TEMPERATURE TRANSDUCER	E-3	I-051 THRU I-057
35761B36	MT-286A / TT-286A	(SPARE DUCT OPTION) HUMIDITY AND TEMPERATURE TRANSDUCER	D-3	I-051 THRU I-057
35761B37	MT-296A / TT-296A	(SPARE DUCT OPTION) HUMIDITY AND TEMPERATURE TRANSDUCER	C-3	I-051 THRU I-057
35761B38	MT-316A / TT-316A	(SPARE DUCT OPTION) HUMIDITY AND TEMPERATURE TRANSDUCER	C-3	I-051 THRU I-057
35761B39	MT-246B / TT-246B	(SPARE DUCT OPTION) HUMIDITY AND TEMPERATURE TRANSDUCER	E-3	I-051 THRU I-057
35761B40	MT-286B / TT-286B	(SPARE DUCT OPTION) HUMIDITY AND TEMPERATURE TRANSDUCER	D-3	I-051 THRU I-057
35761B41	MT-296B / TT-296B	(SPARE DUCT OPTION) HUMIDITY AND TEMPERATURE TRANSDUCER	C-3	I-051 THRU I-057
35761B42	MT-316B / TT-316B	(SPARE DUCT OPTION) HUMIDITY AND TEMPERATURE TRANSDUCER	C-3	I-051 THRU I-057
37462B1	MOV-019	BLEED VALVE	C-6	I-062 THRU I-075
37462B2	MOV-020	ISOLATION VALVE	E-7	I-062 THRU I-075
37462B3	MOV-021	ISOLATION VALVE	E-7	I-062 THRU I-075
37462B4	MOV-022	BLEED VALVE	F-7	I-062 THRU I-075
37462B5	MOV-023	BLEED VALVE	E-7	I-062 THRU I-075
37462B6	MOV-017	SUPPLY VALVE	B-7	I-062 THRU I-075
37462B7	MOV-018	DISCHARGE VALVE	C-6	I-062 THRU I-075
37462B8	TCV-517	TEMPERATURE CONTROL VALVE		I-062 THRU I-075
37462B9	TCV-518	TEMPERATURE CONTROL VALVE		I-062 THRU I-075
37462B10	TCV-519	TEMPERATURE CONTROL VALVE		I-062 THRU I-075
37462B11	PCV-010A	PRESSURE CONTROL VALVE	F-7	I-062 THRU I-075
37462B12	PCV-014A	PRESSURE CONTROL VALVE	D-6	I-062 THRU I-075
37462B13	PCV-015A	PRESSURE CONTROL VALVE	C-6	I-062 THRU I-075
37462B14	PCV-010B	PRESSURE CONTROL VALVE	F-7	I-062 THRU I-075
37462B15	PCV-014B	PRESSURE CONTROL VALVE	D-6	I-062 THRU I-075
37462B16	PCV-015B	PRESSURE CONTROL VALVE	C-6	I-062 THRU I-075
37462B17	DPT-267A	DIFFERENTIAL PRESSURE TRANSDUCER	E-2	I-062 THRU I-075
37462B18	DPT-267B	DIFFERENTIAL PRESSURE TRANSDUCER	E-2	I-062 THRU I-075
37462B19	DPT-277A	DIFFERENTIAL PRESSURE TRANSDUCER	E-2	I-062 THRU I-075
37462B20	DPT-277B	DIFFERENTIAL PRESSURE TRANSDUCER	E-2	I-062 THRU I-075
37462B21	DPT-307A	DIFFERENTIAL PRESSURE TRANSDUCER	E-2	I-062 THRU I-075
37462B22	DPT-307B	DIFFERENTIAL PRESSURE TRANSDUCER	E-2	I-062 THRU I-075
37462B23	PT-268A	PRESSURE TRANSDUCER	E-2	I-062 THRU I-075
37462B24	PT-268B	PRESSURE TRANSDUCER	E-2	I-062 THRU I-075
37462B25	PT-278A	PRESSURE TRANSDUCER	E-2	I-062 THRU I-075
37462B26	PT-278B	PRESSURE TRANSDUCER	E-2	I-062 THRU I-075
37462B27	PT-308A	PRESSURE TRANSDUCER	E-2	I-062 THRU I-075
37462B28	PT-308B	PRESSURE TRANSDUCER	E-2	I-062 THRU I-075
37462B29	MOV-300A	(SPARE DUCT OPTION) ISOLATION VALVE	C-5	I-062 THRU I-075
37462B30	MOV-240A	(SPARE DUCT OPTION) ISOLATION VALVE	E-5	I-062 THRU I-075
37462B31	MOV-300B	(SPARE DUCT OPTION) ISOLATION VALVE	C-5	I-062 THRU I-075
37462B32	MOV-240B	(SPARE DUCT OPTION) ISOLATION VALVE	E-5	I-062 THRU I-075
37462B33	DPT-247A	(SPARE DUCT OPTION) DIFFERENTIAL PRESSURE TRANSDUCER	E-2	I-062 THRU I-075
37462B34	PT-248A	(SPARE DUCT OPTION) PRESSURE TRANSDUCER	E-2	I-062 THRU I-075
37462B35	DPT-287A	(SPARE DUCT OPTION) DIFFERENTIAL PRESSURE TRANSDUCER	E-2	I-062 THRU I-075
37462B36	DPT-297A	(SPARE DUCT OPTION) DIFFERENTIAL PRESSURE TRANSDUCER	E-2	I-062 THRU I-075
37462B37	DPT-317A	(SPARE DUCT OPTION) DIFFERENTIAL PRESSURE TRANSDUCER	E-2	I-062 THRU I-075
37462B38	PT-288A	(SPARE DUCT OPTION) PRESSURE TRANSDUCER	E-2	I-062 THRU I-075
37462B39	PT-298A	(SPARE DUCT OPTION) PRESSURE TRANSDUCER	E-2	I-062 THRU I-075
37462B40	PT-318A	(SPARE DUCT OPTION) PRESSURE TRANSDUCER	E-2	I-062 THRU I-075
37462B41	DPT-287B	(SPARE DUCT OPTION) DIFFERENTIAL PRESSURE TRANSDUCER	E-2	I-062 THRU I-075
37462B42	DPT-297B	(SPARE DUCT OPTION) DIFFERENTIAL PRESSURE TRANSDUCER	E-2	I-062 THRU I-075
37462B43	DPT-317B	(SPARE DUCT OPTION) DIFFERENTIAL PRESSURE TRANSDUCER	E-2	I-062 THRU I-075
37462B44	PT-288B	(SPARE DUCT OPTION) PRESSURE TRANSDUCER	E-2	I-062 THRU I-075
37462B45	PT-298B	(SPARE DUCT OPTION) PRESSURE TRANSDUCER	E-2	I-062 THRU I-075
37462B46	PT-318B	(SPARE DUCT OPTION) PRESSURE TRANSDUCER	E-2	I-062 THRU I-075
37462B47	DPT-247B	(SPARE DUCT OPTION) DIFFERENTIAL PRESSURE TRANSDUCER	E-2	I-062 THRU I-075
37462B48	PT-248B	(SPARE DUCT OPTION) PRESSURE TRANSDUCER	E-2	I-062 THRU I-075
37462B49	MOV-701A	GN2 SUPPLY VALVE	A-8	I-062 THRU I-075
37462B50	MOV-701B	GN2 SUPPLY VALVE	A-8	I-062 THRU I-075
35799A1	ECS POWER PANEL	REMAINS WITH NO MODIFICATIONS	B-6	
37705-100	ECS CONTROL CONSOLE	REMAINS WITH NO MODIFICATIONS	B-3	

NASA PAD 39B – COOLING TOWER AREA NEW EQUIPMENT AND REFURBISHMENT SCHEDULE

REF DES	EQUIPMENT	DESCRIPTION	LOCATION (REFERENCE DRAWING I-013)	REFERENCE SHEET
35441	COOLING TOWER DISTRIBUTOR	REMAINS WITH MODIFICATIONS	H-4	
35427B1	P-411	PUMP	G-4	I-044 THRU I-050
35427B2	CTF-401	COOLING TOWER FAN	E-8	I-044 THRU I-050
35427B3	CTF-402	COOLING TOWER FAN	E-7	I-044 THRU I-050
35427B5	PS-416	PRESSURE SWITCH	E-4	I-044 THRU I-050
35427B6	PS-415	PRESSURE SWITCH	F-4	I-044 THRU I-050
35427B7	P-412	PUMP	F-4	I-044 THRU I-050
35427B8	CTF-403	COOLING TOWER FAN	E-6	I-044 THRU I-050
35426A13	COOLING WATER VALVE POSITION CONVERTER	REPLACE DEPENDING ON NEW EQUIPMENT	G-5	
35441A103	COOLING TOWER 3 VIBRATION SWITCH	REPLACE DEPENDING ON NEW EQUIPMENT	E-5	
35441A104	COOLING TOWER 2 VIBRATION SWITCH	REPLACE DEPENDING ON NEW EQUIPMENT	E-6	
35441A105	COOLING TOWER 1 VIBRATION SWITCH	REPLACE DEPENDING ON NEW EQUIPMENT	E-7	
35441A106	COOLING TOWER 3 OIL SWITCH	REPLACE DEPENDING ON NEW EQUIPMENT	F-6	
35441A107	COOLING TOWER 2 OIL SWITCH	REPLACE DEPENDING ON NEW EQUIPMENT	F-7	
35441A108	COOLING TOWER 1 OIL SWITCH	REPLACE DEPENDING ON NEW EQUIPMENT	F-8	
35435A6A1	CONDENSER WATER PUMP 1 DISCONNECT	REPLACE DEPENDING ON NEW EQUIPMENT	H-3	
35435B5A1	COOLING TOWER FAN 1 DISCONNECT SWITCH	REPLACE DEPENDING ON NEW EQUIPMENT	H-3	
35435B4A1	COOLING TOWER FAN 2 DISCONNECT SWITCH	REPLACE DEPENDING ON NEW EQUIPMENT	H-3	
35436B6A1	COOLING TOWER FAN 3 DISCONNECT SWITCH	REPLACE DEPENDING ON NEW EQUIPMENT	H-3	
35436A6A1	CONDENSER WATER PUMP 2 DISCONNECT	REPLACE DEPENDING ON NEW EQUIPMENT	H-3	

SYM	ZONE	DESCRIPTION	DATE	APPROVED
REVISIONS				

JACOBS
Jacobs Technology Inc.

SIGNATURES		DATE
DRAWN	M. HENNIGH	3/07/14
CHECKED	J. WHITEFORD	3/07/14
SUBMITTED	S. RITTER	3/07/14
ST OF LICENSURE: TN LICENSE NO: 00110556		
APPROVED	G. WARD	3/07/14
	S. HUNT	3/07/14

NATIONAL AERONAUTICS AND SPACE ADMINISTRATION
JOHN F. KENNEDY SPACE CENTER, NASA
KENNEDY SPACE CENTER, FLORIDA

KSC LAUNCH PAD 39-B
ENVIRONMENTAL CONTROL SYSTEM (ECS) REFURBISHMENT
INSTRUMENTATION
NEW EQUIPMENT SCHEDULE
SHEET 3

FILE NO.	SIZE	DWG.NO.	REV
	F	79K39602	
PCN. NO. 98898		SHEET 94 OF 187	

I-011

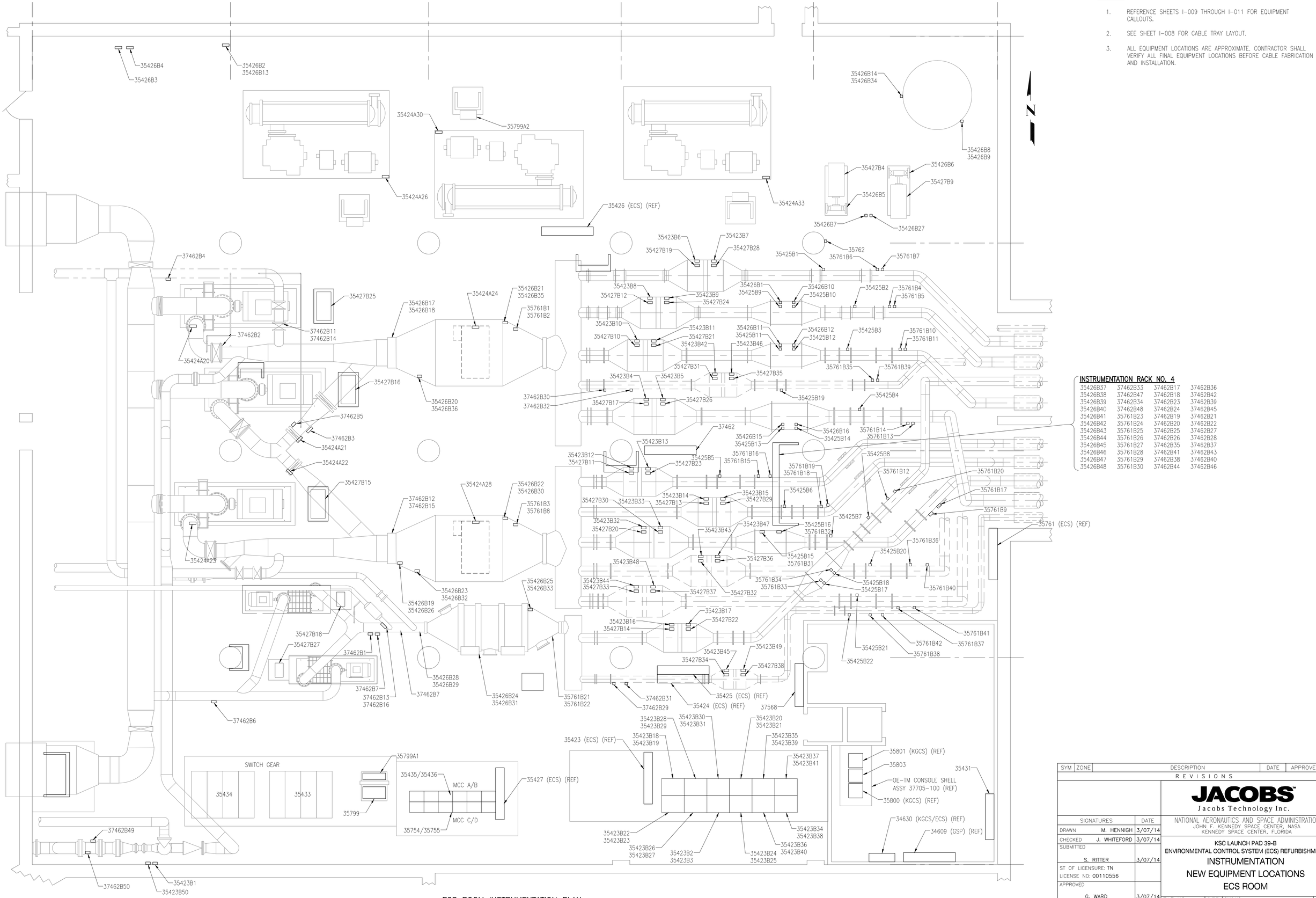

NOTES:

1. REFERENCE SHEETS I-009 THROUGH I-011 FOR EQUIPMENT CALLOUTS.
2. SEE SHEET I-008 FOR CABLE TRAY LAYOUT.
3. ALL EQUIPMENT LOCATIONS ARE APPROXIMATE. CONTRACTOR SHALL VERIFY ALL FINAL EQUIPMENT LOCATIONS BEFORE CABLE FABRICATION AND INSTALLATION.

INSTRUMENTATION RACK NO. 4

35426B37	37462B33	37462B17	37462B36
35426B38	37462B47	37462B18	37462B42
35426B39	37462B34	37462B23	37462B39
35426B40	37462B48	37462B24	37462B45
35426B41	35761B23	37462B19	37462B21
35426B42	35761B24	37462B20	37462B22
35426B43	35761B25	37462B25	37462B27
35426B44	35761B26	37462B26	37462B28
35426B45	35761B27	37462B35	37462B37
35426B46	35761B28	37462B41	37462B43
35426B47	35761B29	37462B38	37462B40
35426B48	35761B30	37462B44	37462B46

ECS ROOM INSTRUMENTATION PLAN

SCALE: 1/4"=1'-0"

SYM	ZONE	DESCRIPTION	DATE	APPROVED
		REVISIONS		

JACOBS
Jacobs Technology Inc.

SIGNATURES		DATE
DRAWN	M. HENNIGH	3/07/14
CHECKED	J. WHITEFORD	3/07/14
SUBMITTED	S. RITTER	3/07/14
ST OF LICENSURE: TN LICENSE NO: 00110556		
APPROVED	G. WARD	3/07/14
	S. HUNT	3/07/14

NATIONAL AERONAUTICS AND SPACE ADMINISTRATION
JOHN F. KENNEDY SPACE CENTER, NASA
KENNEDY SPACE CENTER, FLORIDA

KSC LAUNCH PAD 39-B
ENVIRONMENTAL CONTROL SYSTEM (ECS) REFURBISHMENT
INSTRUMENTATION
NEW EQUIPMENT LOCATIONS
ECS ROOM

FILE NO.	SIZE	DWG.NO.	REV
	F	79K39602	
PCN. NO. 98898		SHEET 95 OF 187	

I-012

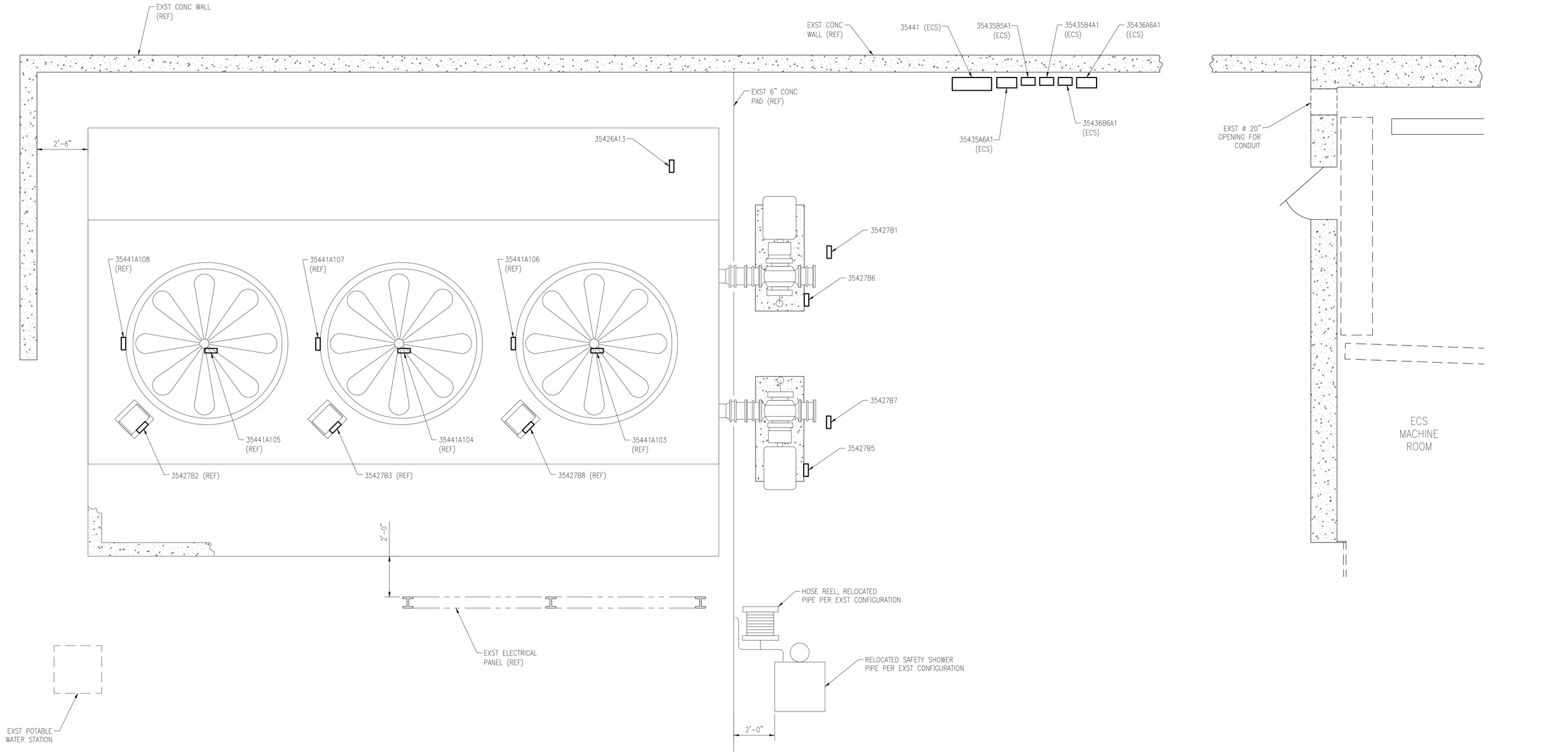

COOLINGTOWER AREA INSTRUMENTATION EQUIPMENT PLAN

SCALE: 1/2" = 1'-0"

SYM	ZONE	DESCRIPTION	DATE	APPROVED
REVISIONS				

JACOBS
Jacobs Technology Inc.

SIGNATURES		DATE
DRAWN	M. HENNIGH	3/07/14
CHECKED	J. WHITEFORD	3/07/14
SUBMITTED	S. RITTER	3/07/14
ST OF LICENSURE: TN LICENSE NO: 00110556		
APPROVED	G. WARD	3/07/14
	S. HUNT	3/07/14

NATIONAL AERONAUTICS AND SPACE ADMINISTRATION
JOHN F. KENNEDY SPACE CENTER, NASA
KENNEDY SPACE CENTER, FLORIDA

KSC LAUNCH PAD 39-B
ENVIRONMENTAL CONTROL SYSTEM (ECS) REFURBISHMENT
INSTRUMENTATION
NEW EQUIPMENT LOCATIONS
COOLING TOWER AREA

FILE NO.	SIZE	DWG.NO.	REV
I-013	F	79K39602	
PCN. NO. 98898		SHEET 96 OF 187	

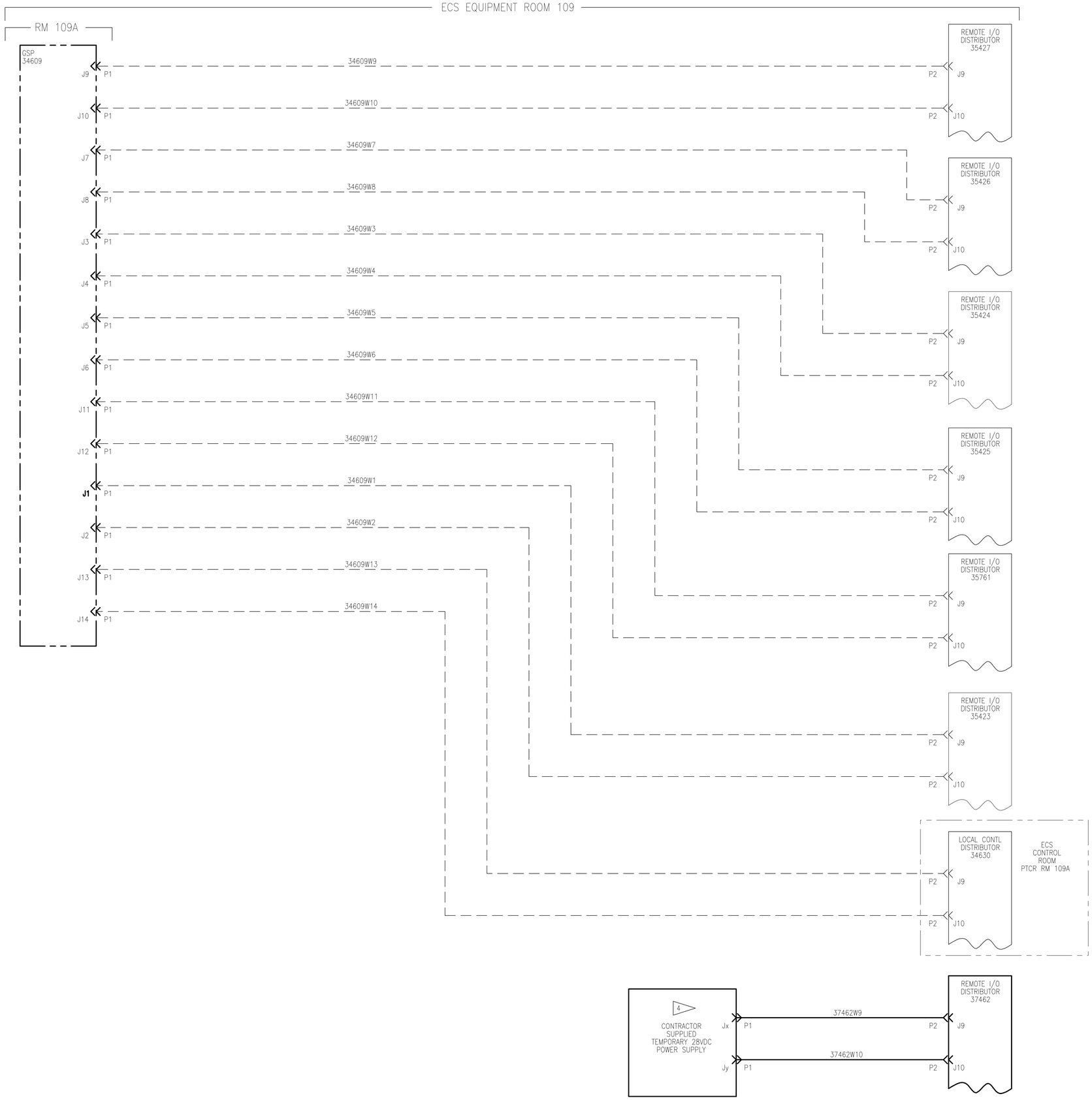

NOTES:

1. THE CONTRACTOR SHALL ADHERE TO THE FOLLOWING SPECIFICATIONS FOR ACCEPTABLE CABLE AND CONNECTOR TYPES, FABRICATION, AND INSTALLATION:
   - KSC-E-165
   - KSC-E-166
   - SSPC SP-1 GUIDELINES
   - NASA-STD-5008 (LATEST VERSION)
   - MIL-DTL-5541
   - 120E3100001 (HEAVY DUTY CABLE SPECIFICATION, GENERAL)
   - 120E3100003 (ELECTRICAL CABLE FABRICATION REQUIREMENTS)
2. THE CONTRACTOR SHALL SUPPLY AND INSTALL ALL CABLES WHICH ARE SHOWN ON THIS SHEET AS SOLID LINES.
3. ALL 28VDC POWER CABLE SUPPLIED BY THE CONTRACTOR SHALL BE OF TYPE 120E3100001-061. REFERENCE DOCUMENT 120E3100001 FOR DETAILED CABLE SPECIFICATIONS.

4 CONNECTORS Jx AND Jy FROM THE TEMPORARY 28VDC SUPPLY SHALL BE DETERMINED BY THE CONTRACTOR AND APPROVED BY THE NASA CONTRACTING OFFICER.

SYM	ZONE	DESCRIPTION	DATE	APPROVED
REVISIONS				

SIGNATURES		DATE
DRAWN	M. HENNIGH	3/07/14
CHECKED	J. WHITEFORD	3/07/14
SUBMITTED	S. RITTER	3/07/14
ST OF LICENSURE: TN LICENSE NO: 00110556		
APPROVED	G. WARD	3/07/14
	S. HUNT	3/07/14

JACOBS
Jacobs Technology Inc.

NATIONAL AERONAUTICS AND SPACE ADMINISTRATION
JOHN F. KENNEDY SPACE CENTER, NASA
KENNEDY SPACE CENTER, FLORIDA

KSC LAUNCH PAD 39-B
ENVIRONMENTAL CONTROL SYSTEM (ECS) REFURBISHMENT
INSTRUMENTATION
28VDC DISTRIBUTION

FILE NO.	SIZE	DWG.NO.	REV
	F	79K39602	

PCN. NO. 98898 SHEET 97 OF 187

I-014

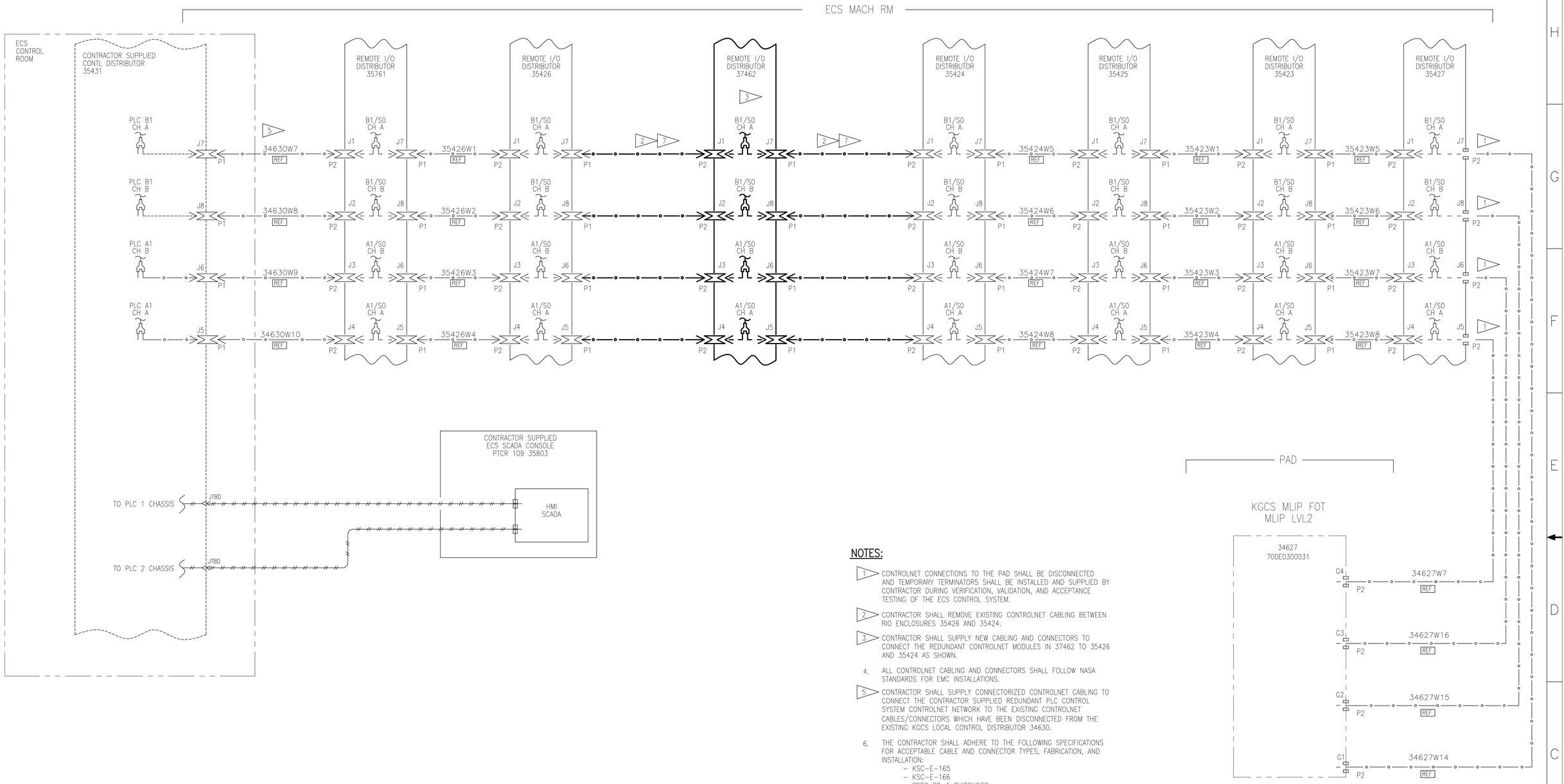

NOTES:

1. CONTROLNET CONNECTIONS TO THE PAD SHALL BE DISCONNECTED AND TEMPORARY TERMINATORS SHALL BE INSTALLED AND SUPPLIED BY CONTRACTOR DURING VERIFICATION, VALIDATION, AND ACCEPTANCE TESTING OF THE ECS CONTROL SYSTEM.
2. CONTRACTOR SHALL REMOVE EXISTING CONTROLNET CABLING BETWEEN RIO ENCLOSURES 35426 AND 35424.
3. CONTRACTOR SHALL SUPPLY NEW CABLING AND CONNECTORS TO CONNECT THE REDUNDANT CONTROLNET MODULES IN 37462 TO 35426 AND 35424 AS SHOWN.
4. ALL CONTROLNET CABLING AND CONNECTORS SHALL FOLLOW NASA STANDARDS FOR EMC INSTALLATIONS.
5. CONTRACTOR SHALL SUPPLY CONNECTORIZED CONTROLNET CABLING TO CONNECT THE CONTRACTOR SUPPLIED REDUNDANT PLC CONTROL SYSTEM CONTROLNET NETWORK TO THE EXISTING CONTROLNET CABLES/CONNECTORS WHICH HAVE BEEN DISCONNECTED FROM THE EXISTING KGCS LOCAL CONTROL DISTRIBUTOR 34630.
6. THE CONTRACTOR SHALL ADHERE TO THE FOLLOWING SPECIFICATIONS FOR ACCEPTABLE CABLE AND CONNECTOR TYPES, FABRICATION, AND INSTALLATION:
   - KSC-E-165
   - KSC-E-166
   - SSPC SP-1 GUIDELINES
   - NASA-STD-5008 (LATEST VERSION)
   - MIL-DTL-5541
   - 120E3100001 (HEAVY DUTY CABLE SPECIFICATION, GENERAL)
   - 120E3100003 (ELECTRICAL CABLE FABRICATION REQUIREMENTS)
7. THE CONTRACTOR SHALL SUPPLY THE CONTROLNET CABLES AND MATING CONNECTORS BETWEEN 35426, 37462, AND 35424. THIS CONTROLNET CABLE IS OF THE TYPE BELDEN 1859A AND IS A RG-11/U, 75Ω, TRIAX CABLE.

LINE LEGEND:

- ETHERNET CAT-6
- CONTROLNET

SYM	ZONE	DESCRIPTION	DATE	APPROVED
REVISIONS				

JACOBS
Jacobs Technology Inc.

SIGNATURES		DATE
DRAWN	M. HENNIGH	3/07/14
CHECKED	J. WHITEFORD	3/07/14
SUBMITTED	S. RITTER	3/07/14
ST OF LICENSURE: TN LICENSE NO: 00110556		
APPROVED	G. WARD	3/07/14
	S. HUNT	3/07/14

NATIONAL AERONAUTICS AND SPACE ADMINISTRATION
JOHN F. KENNEDY SPACE CENTER, NASA
KENNEDY SPACE CENTER, FLORIDA

KSC LAUNCH PAD 39-B
ENVIRONMENTAL CONTROL SYSTEM (ECS) REFURBISHMENT
INSTRUMENTATION
ECS NETWORK PLAN

I-015

FILE NO. | SIZE F | DWG.NO. 79K39602 | REV
PCN. NO. 98898 | SHEET 98 OF 187

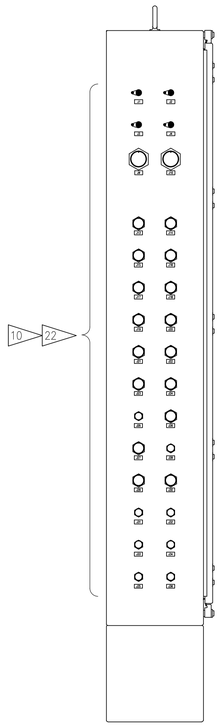

LEFT SIDE VIEW

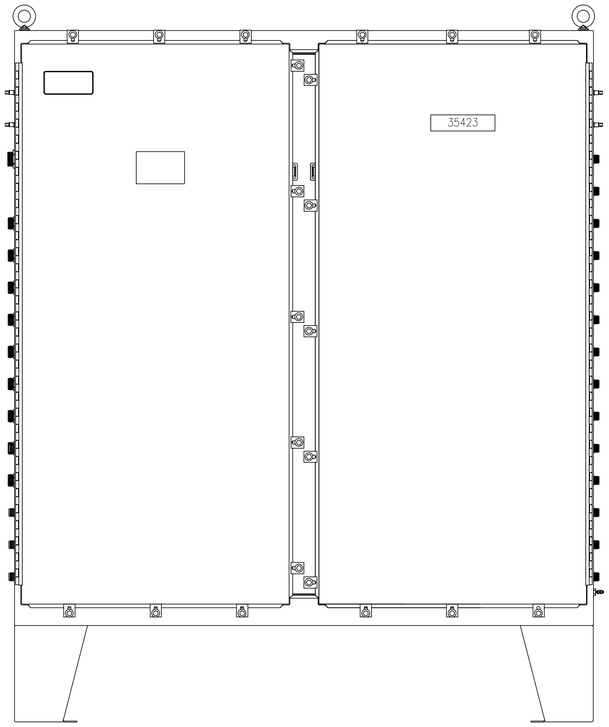

FRONT VIEW

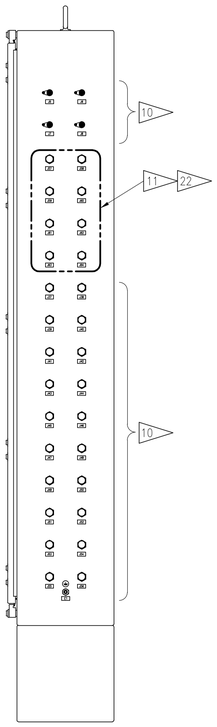

RIGHT SIDE VIEW

DETAIL 1
CONNECTOR MODIFICATIONS 13

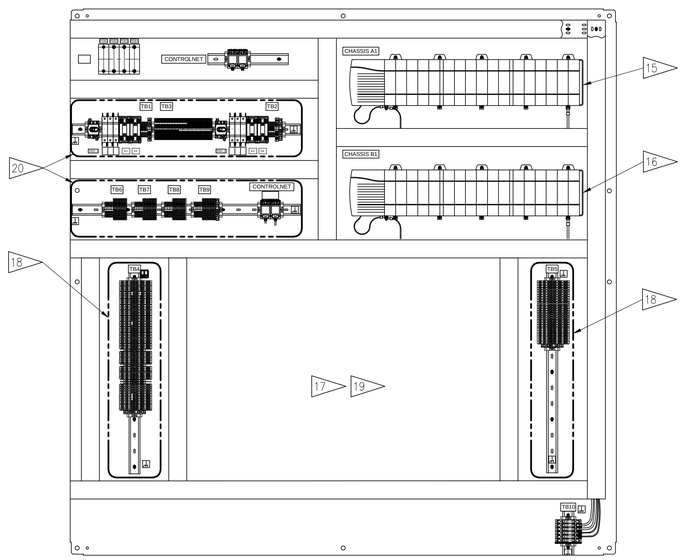

DETAIL 2
RIO ENCLOSURE MODIFICATIONS

DEMO & MODIFICATIONS NOTES:

GENERAL:

1. THIS SHEET DETAILS ALL OF THE CONNECTORS AND EQUIPMENT MODIFICATIONS REQUIRED FOR REMOTE I/O ENCLOSURE 35423.
2. CONTRACTOR SHALL BE RESPONSIBLE FOR ALL DEMOLITION, MODIFICATION, AND NEW EQUIPMENT INSTALLATION DETAILED ON SHEETS I-016 THROUGH I-022 FOR REMOTE I/O ENCLOSURE 35423.
3. UNLESS OTHERWISE SPECIFIED, FABRICATION/MODIFICATION OF ELECTRICAL GROUND SUPPORT EQUIPMENT SHALL BE IN ACCORDANCE WITH KSC-E-165 AND KSC-E-166.
4. UNLESS OTHERWISE SPECIFIED ALL WIRING, TERMINAL BLOCKS, AND ADDITIONAL EQUIPMENT SUPPLIED BY THE CONTRACTOR SHALL BE OF THE SAME TYPE AND MANUFACTURER AS CURRENTLY USED IN REMOTE I/O ENCLOSURE 35423.
5. ALL NEW EQUIPMENT SUPPLIED BY THE CONTRACTOR, AND USED FOR THE MODIFICATION OF REMOTE I/O ENCLOSURE 35423, SHALL BE APPROVED BY THE NASA CONTRACTING OFFICER BEFORE USE.
6. REFERENCE SHEET I-022 FOR CABLE ROUTING DETAILS BETWEEN REMOTE I/O ENCLOSURE 35423 AND FIELD DEVICES.

EXECUTION:

7. CONTRACTOR SHALL PROVIDE DETAILED DRAWINGS OF MODIFIED ENCLOSURES, DEVICE TERMINATIONS, AND WIRING.
8. NASA SHALL PROVIDE DRAWINGS OF EXISTING ENCLOSURE 35423 AFTER THE CONTRACT HAS BEEN AWARDED.
9. THE CONTRACTOR SHALL DETERMINE IF THE EXISTING REMOTE I/O ENCLOSURE 35423 SHALL BE MODIFIED IN THE FIELD OR REMOVED FROM THE SITE TO BE MODIFIED AT THE CONTRACTORS FABRICATION SHOP. FIELD MODIFICATION OR REMOVAL SHALL BE APPROVED BY THE NASA CONTRACTING OFFICER.

ENCLOSURE CONNECTORS:

10 CONNECTORS J1 THROUGH J10 AND J13 THROUGH J56 SHALL REMAIN AS IS AND DO NOT REQUIRE DEMOLITION OR MODIFICATION.

11 CONTRACTOR SHALL SUPPLY AND INSTALL NEW CONNECTORS J57 THROUGH J64. THESE CONNECTORS ARE OF THE TYPE D38999/24SB2SN. THESE CONNECTORS ARE FEMALE JAM NUT RECEPTACLES WHICH REQUIRE SAFETY WIRE IN ACCORDANCE WITH AIA/NAS NASM33540. SAFETY WIRE MATERIAL SHALL BE PER AIA/NAS NASM20995 TYPE C (SST).

12. THE CONTRACTOR SHALL INSTALL AND POT ALL CONNECTORS IN ACCORDANCE WITH MIL-DTL-38999 AND KSC-STD-132.

13 THE CONTRACTOR SHALL SUPPLY AND INSTALL DUST-CAPS FOR ALL SPARE, FUTURE, AND UNUSED CONNECTORS.

14. REFERENCE CONNECTOR ALLOCATION TABLE ON SHEET I-017 FOR CONNECTOR DETAILS.

PLC MODULES:

15 THE CONTRACTOR SHALL DEMO SLOT 4 RTD CARD 1756-IR6I FOR SYSTEM A AND SUPPLY AND INSTALL A NEW 1756-OF8 ANALOG INPUT CARD INTO SLOT 4. THE CONTRACTOR SHALL THEN SUPPLY AND INSTALL THE 1756-TBNH RTB CARD CONNECTOR FOR THE NEW SLOT 4 CARD.

16 THE CONTRACTOR SHALL DEMO THE SLOT 11 1756-OX8I ISOLATED RELAY MODULE. THE CONTRACTOR SHALL THEN SUPPLY AND INSTALL A NEW 1756-OF8 ANALOG OUTPUT CARD, WITH A NEW 1756-TBNH RTB CARD CONNECTOR, INTO SLOT 11.

ENCLOSURE WIRING:

17 CONTRACTOR SHALL USE SHEETS I-016 THROUGH I-022 AND I-075 THROUGH I-101 TO VERIFY AND/OR MODIFY:

- ALL 28VDC DISTRIBUTION WIRING.
- WIRING BETWEEN PLC AND FIELD INTERFACE TERMINAL BLOCKS.
- ALL WIRING BETWEEN ENCLOSURE CONNECTORS AND FIELD INTERFACE TERMINAL BLOCKS.

18 CONTRACTOR SHALL SUPPLY AND INSTALL ANY ADDITIONAL FIELD INTERFACE TERMINAL BLOCKS REQUIRED TO TERMINATE ALL SIGNALS AND WIRING BETWEEN PLC'S AND ENCLOSURE INTERFACE CONNECTORS.

19 CONTRACTOR SHALL SUPPLY AND INSTALL ANY ADDITIONAL ENCLOSURE WIRING REQUIRED TO CONNECT ALL SIGNALS BETWEEN PLC'S AND ENCLOSURE INTERFACE CONNECTORS.

20 CONTRACTOR SHALL SUPPLY AND INSTALL ANY ADDITIONAL POWER TERMINAL BLOCKS REQUIRED TO CONNECT THE 28VDC SUPPLY TO THE PLC'S, FIELD INTERFACE TERMINAL BLOCKS, AND/OR ENCLOSURE INTERFACE CONNECTORS.

21. ALL WIRING FROM ENCLOSURE INTERFACE CONNECTORS SHALL BE LANDED ON THE FIELD INTERFACE TERMINAL BLOCKS BEFORE TERMINATING TO THE PLC OR OTHER INTERNAL ENCLOSURE DEVICES.

SPARE DUCT OPTION:

22 IF SPARE DUCT OPTION IS INSTALLED, THE CONTRACTOR SHALL SUPPLY AND INSTALL ALL CABLES AND CONNECTORS TO CONNECT FIELD DEVICES TO ENCLOSURE CONNECTORS J15 THROUGH J24, J26, J27, J29, J30, J61, AND J62, AND THE CONTRACTOR WILL NOT HAVE TO SUPPLY PROTECTIVE DUST CAPS. REFERENCE SHEET I-017.

SYM	ZONE	DESCRIPTION	DATE	APPROVED
		REVISIONS		

JACOBS
Jacobs Technology Inc.

SIGNATURES		DATE
DRAWN	M. HENNIGH	3/07/14
CHECKED	J. WHITEFORD	3/07/14
SUBMITTED	S. RITTER	3/07/14
ST OF LICENSURE: TN LICENSE NO: 00110556		
APPROVED	G. WARD	3/07/14
	S. HUNT	3/07/14

NATIONAL AERONAUTICS AND SPACE ADMINISTRATION
JOHN F. KENNEDY SPACE CENTER, NASA
KENNEDY SPACE CENTER, FLORIDA

KSC LAUNCH PAD 39-B
ENVIRONMENTAL CONTROL SYSTEM (ECS) REFURBISHMENT
INSTRUMENTATION
ECS LP SYSTEM A1/B1 CHASSIS 35423
DEMOLITION & MODIFICATION SHEET 1

I-016

FILE NO.	SIZE	DWG.NO.	REV
	F	79K39602	
PCN. NO. 98898		SHEET 99 OF 187	

1 3 ECS RIO CABINET 35423 CONNECTOR ALLOCATION TABLE

ENCLOSURE CONNECTOR	ENCLOSURE CONNECTOR TYPE (JAMNUT RECEPTACLE)	MATING CONNECTOR (PLUG)	DESCRIPTION	DISPOSITION
J1	ADBJ79-E1-UBJ20	PL75	CONTROLNET IN PLC B1 CHA	NO MODIFICATION
J2	ADBJ79-E1-UBJ20	PL75	CONTROLNET IN PLC B1 CHB	NO MODIFICATION
J3	ADBJ79-E1-UBJ20	PL75	CONTROLNET IN PLC A1 CHB	NO MODIFICATION
J4	ADBJ79-E1-UBJ20	PL75	CONTROLNET IN PLC A1 CHA	NO MODIFICATION
J5	ADBJ79-E1-UBJ20	PL75	CONTROLNET IN PLC A1 CHA	NO MODIFICATION
J6	ADBJ79-E1-UBJ20	PL75	CONTROLNET IN PLC A1 CHB	NO MODIFICATION
J7	ADBJ79-E1-UBJ20	PL75	CONTROLNET IN PLC B1 CHA	NO MODIFICATION
J8	ADBJ79-E1-UBJ20	PL75	CONTROLNET IN PLC B1 CHB	NO MODIFICATION
J9	MS3454LS32-1P	MS3456LS32-1S	28VDC POWER INPUT SYSTEM A	NO MODIFICATION
J10	MS3454LS32-1P	MS3456LS32-1S	28VDC POWER INPUT SYSTEM B	NO MODIFICATION
J13	D38999 / 24SE8SN	D38999 / 26SE8PN	CONNECTOR REUSED FOR PRV-702A	MODIFY / VERIFY WIRING BACK TO FIELD INTERFACE TERMINAL BLOCKS
J14	D38999 / 24SE8SN	D38999 / 26SE8PN	CONNECTOR REUSED FOR PRV-702B	MODIFY / VERIFY WIRING BACK TO FIELD INTERFACE TERMINAL BLOCKS
J15	D38999 / 24SE8SN	D38999 / 26SE8PN	RESERVED FOR SCR-311A (INSTALL OPTION)	IF OPTION INSTALLED, MODIFY / VERIFY WIRING BACK TO FIELD INTERFACE TERMINAL BLOCKS OTHERWISE PROVIDE AND INSTALL DUST CAP
J16	D38999 / 24SE8SN	D38999 / 26SE8PN	RESERVED FOR SCR-241A (INSTALL OPTION)	IF OPTION INSTALLED, MODIFY / VERIFY WIRING BACK TO FIELD INTERFACE TERMINAL BLOCKS OTHERWISE PROVIDE AND INSTALL DUST CAP
J17	D38999 / 24SE8SN	D38999 / 26SE8PN	RESERVED FOR SCR-281A (INSTALL OPTION)	IF OPTION INSTALLED, MODIFY / VERIFY WIRING BACK TO FIELD INTERFACE TERMINAL BLOCKS OTHERWISE PROVIDE AND INSTALL DUST CAP
J18	D38999 / 24SE8SN	D38999 / 26SE8PN	RESERVED FOR SCR-291A (INSTALL OPTION)	IF OPTION INSTALLED, MODIFY / VERIFY WIRING BACK TO FIELD INTERFACE TERMINAL BLOCKS OTHERWISE PROVIDE AND INSTALL DUST CAP
J19	D38999 / 24SE8SN	D38999 / 26SE8PN	RESERVED FOR SCR-311B (INSTALL OPTION)	IF OPTION INSTALLED, MODIFY / VERIFY WIRING BACK TO FIELD INTERFACE TERMINAL BLOCKS OTHERWISE PROVIDE AND INSTALL DUST CAP
J20	D38999 / 24SE8SN	D38999 / 26SE8PN	RESERVED FOR SCR-241B (INSTALL OPTION)	IF OPTION INSTALLED, MODIFY / VERIFY WIRING BACK TO FIELD INTERFACE TERMINAL BLOCKS OTHERWISE PROVIDE AND INSTALL DUST CAP
J21	D38999 / 24SE8SN	D38999 / 26SE8PN	RESERVED FOR SCR-281B (INSTALL OPTION)	IF OPTION INSTALLED, MODIFY / VERIFY WIRING BACK TO FIELD INTERFACE TERMINAL BLOCKS OTHERWISE PROVIDE AND INSTALL DUST CAP
J22	D38999 / 24SE8SN	D38999 / 26SE8PN	RESERVED FOR SCR-291B (INSTALL OPTION)	IF OPTION INSTALLED, MODIFY / VERIFY WIRING BACK TO FIELD INTERFACE TERMINAL BLOCKS OTHERWISE PROVIDE AND INSTALL DUST CAP
J23	D38999 / 24SE8SN	D38999 / 26SE8PN	RESERVED FOR OTS-241A (INSTALL OPTION)	IF OPTION INSTALLED, MODIFY / VERIFY WIRING BACK TO FIELD INTERFACE TERMINAL BLOCKS OTHERWISE PROVIDE AND INSTALL DUST CAP
J24	D38999 / 24SE8SN	D38999 / 26SE8PN	RESERVED FOR OTS-281A (INSTALL OPTION)	IF OPTION INSTALLED, MODIFY / VERIFY WIRING BACK TO FIELD INTERFACE TERMINAL BLOCKS OTHERWISE PROVIDE AND INSTALL DUST CAP
J25	D38999 / 24SB2SN	D38999 / 26SB2PN	CONNECTOR REUSED FOR SCR-261A	MODIFY / VERIFY WIRING BACK TO FIELD INTERFACE TERMINAL BLOCKS
J26	D38999 / 24SE8SN	D38999 / 26SE8PN	RESERVED FOR OTS-291A (INSTALL OPTION)	IF OPTION INSTALLED, MODIFY / VERIFY WIRING BACK TO FIELD INTERFACE TERMINAL BLOCKS OTHERWISE PROVIDE AND INSTALL DUST CAP
J27	D38999 / 24SE8SN	D38999 / 26SE8PN	RESERVED FOR OTS-311A (INSTALL OPTION)	IF OPTION INSTALLED, MODIFY / VERIFY WIRING BACK TO FIELD INTERFACE TERMINAL BLOCKS OTHERWISE PROVIDE AND INSTALL DUST CAP
J28	D38999 / 24SB2SN	D38999 / 26SB2PN	CONNECTOR REUSED FOR SCR-261B	MODIFY / VERIFY WIRING BACK TO FIELD INTERFACE TERMINAL BLOCKS
J29	D38999 / 24SE8SN	D38999 / 26SE8PN	RESERVED FOR OTS-241B (INSTALL OPTION)	IF OPTION INSTALLED, MODIFY / VERIFY WIRING BACK TO FIELD INTERFACE TERMINAL BLOCKS OTHERWISE PROVIDE AND INSTALL DUST CAP
J30	D38999 / 24SE8SN	D38999 / 26SE8PN	RESERVED FOR OTS-281B (INSTALL OPTION)	IF OPTION INSTALLED, MODIFY / VERIFY WIRING BACK TO FIELD INTERFACE TERMINAL BLOCKS OTHERWISE PROVIDE AND INSTALL DUST CAP
J31	D38999 / 24SB2SN	D38999 / 26SB2PN	CONNECTOR REUSED FOR OTS-231A	MODIFY / VERIFY WIRING BACK TO FIELD INTERFACE TERMINAL BLOCKS
J32	D38999 / 24SB2SN	D38999 / 26SB2PN	CONNECTOR REUSED FOR OTS-231B	MODIFY / VERIFY WIRING BACK TO FIELD INTERFACE TERMINAL BLOCKS
J33	D38999 / 24SB2SN	D38999 / 26SB2PN	CONNECTOR REUSED FOR OTS-201B	MODIFY / VERIFY WIRING BACK TO FIELD INTERFACE TERMINAL BLOCKS
J34	D38999 / 24SB2SN	D38999 / 26SB2PN	CONNECTOR REUSED FOR OTS-201A	MODIFY / VERIFY WIRING BACK TO FIELD INTERFACE TERMINAL BLOCKS
J35	D38999 / 24SB2SN	D38999 / 26SB2PN	CONNECTOR REUSED FOR OTS-211A	MODIFY / VERIFY WIRING BACK TO FIELD INTERFACE TERMINAL BLOCKS
J36	D38999 / 24SB2SN	D38999 / 26SB2PN	CONNECTOR REUSED FOR OTS-211B	MODIFY / VERIFY WIRING BACK TO FIELD INTERFACE TERMINAL BLOCKS
J37	D38999 / 24SB2SN	D38999 / 26SB2PN	CONNECTOR REUSED FOR OTS-221A	MODIFY / VERIFY WIRING BACK TO FIELD INTERFACE TERMINAL BLOCKS
J38	D38999 / 24SB2SN	D38999 / 26SB2PN	CONNECTOR REUSED FOR OTS-221B	MODIFY / VERIFY WIRING BACK TO FIELD INTERFACE TERMINAL BLOCKS
J39	D38999 / 24SB2SN	D38999 / 26SB2PN	CONNECTOR REUSED FOR OTS-251A	MODIFY / VERIFY WIRING BACK TO FIELD INTERFACE TERMINAL BLOCKS
J40	D38999 / 24SB2SN	D38999 / 26SB2PN	CONNECTOR REUSED FOR OTS-251B	MODIFY / VERIFY WIRING BACK TO FIELD INTERFACE TERMINAL BLOCKS
J41	D38999 / 24SB2SN	D38999 / 26SB2PN	CONNECTOR REUSED FOR OTS-261A	MODIFY / VERIFY WIRING BACK TO FIELD INTERFACE TERMINAL BLOCKS
J42	D38999 / 24SB2SN	D38999 / 26SB2PN	CONNECTOR REUSED FOR OTS-261B	MODIFY / VERIFY WIRING BACK TO FIELD INTERFACE TERMINAL BLOCKS
J43	D38999 / 24SB2SN	D38999 / 26SB2PN	CONNECTOR REUSED FOR OTS-301A	MODIFY / VERIFY WIRING BACK TO FIELD INTERFACE TERMINAL BLOCKS
J44	D38999 / 24SB2SN	D38999 / 26SB2PN	CONNECTOR REUSED FOR OTS-301B	MODIFY / VERIFY WIRING BACK TO FIELD INTERFACE TERMINAL BLOCKS
J45	D38999 / 24SB2SN	D38999 / 26SB2PN	CONNECTOR REUSED FOR SCR-221A	MODIFY / VERIFY WIRING BACK TO FIELD INTERFACE TERMINAL BLOCKS
J46	D38999 / 24SB2SN	D38999 / 26SB2PN	CONNECTOR REUSED FOR SCR-221B	MODIFY / VERIFY WIRING BACK TO FIELD INTERFACE TERMINAL BLOCKS
J47	D38999 / 24SB2SN	D38999 / 26SB2PN	CONNECTOR REUSED FOR SCR-251A	MODIFY / VERIFY WIRING BACK TO FIELD INTERFACE TERMINAL BLOCKS
J48	D38999 / 24SB2SN	D38999 / 26SB2PN	CONNECTOR REUSED FOR SCR-251B	MODIFY / VERIFY WIRING BACK TO FIELD INTERFACE TERMINAL BLOCKS
J49	D38999 / 24SB2SN	D38999 / 26SB2PN	CONNECTOR REUSED FOR SCR-211B	MODIFY / VERIFY WIRING BACK TO FIELD INTERFACE TERMINAL BLOCKS
J50	D38999 / 24SB2SN	D38999 / 26SB2PN	CONNECTOR REUSED FOR SCR-211A	MODIFY / VERIFY WIRING BACK TO FIELD INTERFACE TERMINAL BLOCKS
J51	D38999 / 24SB2SN	D38999 / 26SB2PN	CONNECTOR REUSED FOR SCR-301A	MODIFY / VERIFY WIRING BACK TO FIELD INTERFACE TERMINAL BLOCKS
J52	D38999 / 24SB2SN	D38999 / 26SB2PN	CONNECTOR REUSED FOR SCR-301B	MODIFY / VERIFY WIRING BACK TO FIELD INTERFACE TERMINAL BLOCKS
J53	D38999 / 24SB2SN	D38999 / 26SB2PN	CONNECTOR REUSED FOR SCR-231A	MODIFY / VERIFY WIRING BACK TO FIELD INTERFACE TERMINAL BLOCKS
J54	D38999 / 24SB2SN	D38999 / 26SB2PN	CONNECTOR REUSED FOR SCR-231B	MODIFY / VERIFY WIRING BACK TO FIELD INTERFACE TERMINAL BLOCKS
J55	D38999 / 24SB2SN	D38999 / 26SB2PN	CONNECTOR REUSED FOR SCR-201B	MODIFY / VERIFY WIRING BACK TO FIELD INTERFACE TERMINAL BLOCKS
J56	D38999 / 24SB2SN	D38999 / 26SB2PN	CONNECTOR REUSED FOR SCR-201A	MODIFY / VERIFY WIRING BACK TO FIELD INTERFACE TERMINAL BLOCKS
J57	D38999 / 24SB2SN	D38999 / 26SB2PN	CONNECTOR USED FOR SCR-271A	PROVIDE AND INSTALL NEW CONNECTOR, WIRING, AND TERMINAL BLOCKS
J58	D38999 / 24SB2SN	D38999 / 26SB2PN	CONNECTOR USED FOR SCR-271B	PROVIDE AND INSTALL NEW CONNECTOR, WIRING, AND TERMINAL BLOCKS
J59	D38999 / 24SB2SN	D38999 / 26SB2PN	CONNECTOR USED FOR SCR-271A	PROVIDE AND INSTALL NEW CONNECTOR, WIRING, AND TERMINAL BLOCKS
J60	D38999 / 24SB2SN	D38999 / 26SB2PN	CONNECTOR USED FOR SCR-271B	PROVIDE AND INSTALL NEW CONNECTOR, WIRING, AND TERMINAL BLOCKS
J61	D38999 / 24SB2SN	D38999 / 26SB2PN	RESERVED FOR OTS-291B (INSTALL OPTION)	IF OPTION INSTALLED, MODIFY / VERIFY WIRING BACK TO FIELD INTERFACE TERMINAL BLOCKS OTHERWISE PROVIDE AND INSTALL DUST CAP
J62	D38999 / 24SB2SN	D38999 / 26SB2PN	RESERVED FOR OTS-311B (INSTALL OPTION)	IF OPTION INSTALLED, MODIFY / VERIFY WIRING BACK TO FIELD INTERFACE TERMINAL BLOCKS OTHERWISE PROVIDE AND INSTALL DUST CAP
J63	D38999 / 24SB2SN	D38999 / 26SB2PN	SPARE	PROVIDE AND INSTALL NEW CONNECTOR WITH DUST CAP
J64	D38999 / 24SB2SN	D38999 / 26SB2PN	SPARE	PROVIDE AND INSTALL NEW CONNECTOR WITH DUST CAP

2 RIO CABINET 35423 DC DEVICE POWER SCHEDULE

POWER SYSTEM FEED (A OR B)	MAIN DC POWER BUS	CABINET TB DESIGNATION	SECONDARY DC POWER BUS	CABINET TB DESIGNATION	CABINET INTERFACE CONNECTOR	DEVICE POWERED	REF. SHEET
GSP SYSTEM A	INSTRUMENT POWER BUS +D120	TB-6 (1 THRU 5)	D130A	TB6-6	35423 - J13 35423 - J37	PRV-702A OTS-221A	I-078 I-085
			D130B	TB6-7	35423 - J41 35423 - J23	OTS-261A OTS-241A	I-085 I-085
			D130C	TB6-8	35423 - J39 35423 - J24	OTS-251A OTS-281A	I-085 I-085
			D130D	TB6-9	35423 - J43 35423 - J26	OTS-301A OTS-291A	I-085 I-085
			D130E	TB6-10	35423 - J31 35423 - J27	OTS-231A OTS-311A	I-085 I-085
			D130F	TB6-11	35423 - J59	OTS-271A	I-085
			D130G	TB6-12	35423 - J34	OTS-201A	I-085
			D130H	TB6-13	35423 - J35	OTS-211A	I-085
	CONTROL POWER BUS +D121	TB-7 (1 THRU 5)	D131A	TB7-6			
			D131B	TB7-7			
			D131C	TB7-8			
			D131D	TB7-9			
			D131E	TB7-10			
			D131F	TB7-11			
			D131G	TB7-12			
			D131H	TB7-13			
GSP SYSTEM B	INSTRUMENT POWER BUS +D220	TB-8 (1 THRU 5)	D230A	TB8-6	35423 - J14 35423 - J38	PRV-702B OTS-221B	I-078 I-085
			D230B	TB8-7	35423 - J42 35423 - J29	OTS-261B OTS-241B	I-085 I-085
			D230C	TB8-8	35423 - J40 35423 - J30	OTS-251B OTS-281B	I-085 I-085
			D230D	TB8-9	35423 - J44 35423 - J61	OTS-301B OTS-291B	I-085 I-085
			D230E	TB8-10	35423 - J32 35423 - J62	OTS-231B OTS-311B	I-085 I-085
			D230F	TB8-11	35423 - J60	OTS-271B	I-085
			D230G	TB8-12	35423 - J33	OTS-201B	I-085
			D230H	TB8-13	35423 - J36	OTS-211B	I-085
	CONTROL POWER BUS +D221	TB-9 (1 THRU 5)	D231A	TB9-6			
			D231B	TB9-7			
			D231C	TB9-8			
			D231D	TB9-9			
			D231E	TB9-10			
			D231F	TB9-11			
			D231G	TB9-12			
			D231H	TB9-13			

DEMO & MODIFICATION NOTES:

GENERAL:

1. THE CONNECTOR ALLOCATION TABLE DETAILS CONNECTOR TYPES AND EQUIPMENT INTERCONNECTIONS.
2. 28VDC DISTRIBUTION TABLE DETAILS ALL DEVICES, CONNECTIONS TO REMOTE I/O ENCLOSURE 35423, WHICH REQUIRE 28VDC SOURCE POWER.
3. IF OPTION IS INSTALLED, CONTRACTOR SHALL INSTALL 2 CONDUCTOR CABLE OF TYPE TBD FOR CONNECTIONS TO J15 THROUGH J24, J26, J27, J29, AND J30. ONLY 3 PINS IN EACH OF THE ABOVE CONNECTORS SHALL BE USED.

SYM	ZONE	DESCRIPTION	DATE	APPROVED
REVISIONS				

JACOBS
Jacobs Technology Inc.

SIGNATURES		DATE
DRAWN	M. HENNIGH	3/07/14
CHECKED	J. WHITEFORD	3/07/14
SUBMITTED	S. RITTER	3/07/14
ST OF LICENSURE: TN LICENSE NO: 00110556		
APPROVED	G. WARD	3/07/14
	S. HUNT	3/07/14

NATIONAL AERONAUTICS AND SPACE ADMINISTRATION
JOHN F. KENNEDY SPACE CENTER, NASA
KENNEDY SPACE CENTER, FLORIDA

KSC LAUNCH PAD 39-B
ENVIRONMENTAL CONTROL SYSTEM (ECS) REFURBISHMENT
INSTRUMENTATION
ECS LP SYSTEM A1/B1 CHASSIS 35423
DEMOLITION & MODIFICATION SHEET 2

FILE NO.	SIZE	DWG.NO.	REV
	F	79K39602	
PCN. NO. 98898		SHEET 100 OF 187	

I-017

ECS RIO CABINET 35423 SYSTEM A1

IDENT	TAG NAME	I/O TYPE	DESCRIPTION	RACK	SLOT	CH	DEVICE TAG	ENCLOSURE INTERFACE CONNECTOR	DEVICE REFERENCE SCHEMATIC	POWER SOURCE/BUS	POWER RETURN/ NEUTRAL	POWER REFERENCE SCHEMATIC	SIGNAL TYPE	SENSOR RANGE	UNITS
1756-IF6I ISOLATED ANALOG VOLTAGE/CURRENT INPUT MODULE															
35423A-AI-1	35423_GSP_SYSA_SUP_V	AI	35423 GSP BUS A VDC (SUPPLY VOLTAGE = SIGNAL x 4)	A1	2	0	R2	N/A	I-093	N/A	TB3 D1R	I-093	0 – 10 VDC	0 – 10	VDC
35423A-AI-2		AI		A1	2	1									
35423A-AI-3		AI		A1	2	2									
35423A-AI-4		AI		A1	2	3									
35423A-AI-5		AI		A1	2	4									
35423A-AI-6		AI		A1	2	5									
1756-IF6I ISOLATED ANALOG VOLTAGE/CURRENT INPUT MODULE															
35423A-AI-7	GN2_REG_PRV_702A_PRI_PCT_OPN_IND	AI	GN2 REGULATOR PRV-702A PRIMARY PERCENT OPEN INDICATION	A1	3	0	PRV-702A	35423 – J13	I-078	TB6 +D130A	TB3 D1R	I-094	4 – 20mA	0 – 100	%OPEN
35423A-AI-8	GN2_REG_PRV_702B_SEC_PCT_OPN_IND	AI	GN2 REGULATOR PRV-702B SECONDARY PERCENT OPEN INDICATION	A1	3	1	PRV-702B	35423 – J14	I-078	TB8 +D230A	TB3 D1R	I-094	4 – 20mA	0 – 100	%OPEN
35423A-AI-9		AI		A1	3	2									
35423A-AI-10		AI		A1	3	3									
35423A-AI-11		AI		A1	3	4									
35423A-AI-12		AI		A1	3	5									
1756-OF8 VOLTAGE/CURRENT ANALOG OUTPUT MODULE															
35423A-AO-1	GN2_REG_PRV_702A_PRI_OUT_ADJ	AO	GN2 REGULATOR PRV-702A PRIMARY OUTPUT ADJUSTMENT	A1	5	0	PRV-702A	35423 – J13	I-078	CHAN I/O	CHAN I/O	–	4 – 20 mA	0 – 100	%OPEN
35423A-AO-2	GN2_REG_PRV_702B_SEC_OUT_ADJ	AO	GN2 REGULATOR PRV-702B SECONDARY OUTPUT ADJUSTMENT	A1	5	1	PRV-702B	35423 – J14	I-078	CHAN I/O	CHAN I/O	–	4 – 20 mA	0 – 100	%OPEN
35423A-AO-3		AO		A1	5	2									
35423A-AO-4		AO		A1	5	3									
35423A-AO-5		AO		A1	5	4									
35423A-AO-6		AO		A1	5	5									
35423A-AO-7		AO		A1	5	6									
35423A-AO-8		AO		A1	5	7									
1756-OF8 VOLTAGE/CURRENT ANALOG OUTPUT MODULE															
35423A-AO-9	CS_IT_HTR1_OUT_TEMP_ADJ	AO	DUCT CS/IT HEATER 201A OUTLET TEMPERATURE ADJUSTMENT	A1	6	0	H-201A	35423 – J56	I-091	CHAN I/O	CHAN I/O	–	0 – 10 VDC	0 – 100	%KW
35423A-AO-10		AO		A1	6	1									
35423A-AO-11	CS_AFT_HTR1_OUT_TEMP_ADJ	AO	DUCT CS/AFT HEATER 231A OUTLET TEMPERATURE ADJUSTMENT	A1	6	2	H-231A	35423 – J53	I-091	CHAN I/O	CHAN I/O	–	0 – 10 VDC	0 – 100	%KW
35423A-AO-12		AO		A1	6	3									
35423A-AO-13		AO		A1	6	4									
35423A-AO-14	ICPS_HTR1_OUT_TEMP_ADJ	AO	DUCT ICPS HEATER 301A OUTLET TEMPERATURE ADJUSTMENT	A1	6	5	H-301A	35423 – J51	I-091	CHAN I/O	CHAN I/O	–	0 – 10 VDC	0 – 100	%KW
35423A-AO-15		AO		A1	6	6									
† 35423A-AO-16	SPARE4_HTR1_OUT_TEMP_ADJ	AO	SPARE DUCT 4 HEATER 311A OUTLET TEMPERATURE ADJUSTMENT	A1	6	7	H-311A	35423 – J15	I-091	CHAN I/O	CHAN I/O	–	0 – 10 VDC	0 – 100	%KW
1756-OF8 VOLTAGE/CURRENT ANALOG OUTPUT MODULE															
35423A-AO-17	CS_FS_HTR1_OUT_TEMP_ADJ	AO	DUCT CS/FS HEATER 211A OUTLET TEMPERATURE ADJUSTMENT	A1	7	0	H-211A	35423 – J50	I-091	CHAN I/O	CHAN I/O	–	0 – 10 VDC	0 – 100	%KW
35423A-AO-18	SM_HTR1_OUT_TEMP_ADJ	AO	DUCT SM HEATER 221A OUTLET TEMPERATURE ADJUSTMENT	A1	7	1	H-221A	35423 – J45	I-091	CHAN I/O	CHAN I/O	–	0 – 10 VDC	0 – 100	%KW
† 35423A-AO-19	SPARE1_HTR1_OUT_TEMP_ADJ	AO	SPARE DUCT 1 HEATER 241A OUTLET TEMPERATURE ADJUSTMENT	A1	7	2	H-241A	35423 – J16	I-091	CHAN I/O	CHAN I/O	–	0 – 10 VDC	0 – 100	%KW
35423A-AO-20	LAS_HTR1_OUT_TEMP_ADJ	AO	DUCT LAS HEATER 251A OUTLET TEMPERATURE ADJUSTMENT	A1	7	3	H-251A	35423 – J47	I-091	CHAN I/O	CHAN I/O	–	0 – 10 VDC	0 – 100	%KW
35423A-AO-21	EC_CC_HTR1_OUT_TEMP_ADJ	AO	DUCT EC/CC HEATER 261A OUTLET TEMPERATURE ADJUSTMENT	A1	7	4	H-261A	35423 – J25	I-091	CHAN I/O	CHAN I/O	–	0 – 10 VDC	0 – 100	%KW
35423A-AO-22	CS_ENG_HTR1_OUT_TEMP_ADJ	AO	DUCT CS/ENG HEATER 271A OUTLET TEMPERATURE ADJUSTMENT	A1	7	5	H-271A	35423 – J57	I-091	CHAN I/O	CHAN I/O	–	0 – 10 VDC	0 – 100	%KW
† 35423A-AO-23	SPARE2_HTR1_OUT_TEMP_ADJ	AO	SPARE DUCT 2 HEATER 281A OUTLET TEMPERATURE ADJUSTMENT	A1	7	6	H-281A	35423 – J17	I-091	CHAN I/O	CHAN I/O	–	0 – 10 VDC	0 – 100	%KW
† 35423A-AO-24	SPARE3_HTR1_OUT_TEMP_ADJ	AO	SPARE DUCT 3 HEATER 291A OUTLET TEMPERATURE ADJUSTMENT	A1	7	7	H-291A	35423 – J18	I-091	CHAN I/O	CHAN I/O	–	0 – 10 VDC	0 – 100	%KW
1756-IB16D DC (10-30V) ISOLATED INPUT MODULE															
35423A-DI-1	35423_D120_ON_IND	DI	35423 – D120 INSTRUMENT BUS POWER ON INDICATION	A1	8	0	TB6 +D120	N/A	I-093	TB6 +D120	TB3 D1R	I-093	10 -30 VDC	PWR ON/ PWR OFF	–
35423A-DI-2	35423_D121_ON_IND	DI	35423 – D121 INSTRUMENT BUS POWER ON INDICATION	A1	8	1	TB7 +D121	N/A	I-093	TB7 +D121	TB3 D1R	I-093	10 -30 VDC	PWR ON/ PWR OFF	–
35423A-DI-3		DI		A1	8	2									
35423A-DI-4		DI		A1	8	3									
35423A-DI-5		DI		A1	8	4									
35423A-DI-6		DI		A1	8	5									
35423A-DI-7		DI		A1	8	6									
35423A-DI-8		DI		A1	8	7									
35423A-DI-9		DI		A1	8	8									
35423A-DI-10		DI		A1	8	9									
35423A-DI-11		DI		A1	8	10									
35423A-DI-12		DI		A1	8	11									
35423A-DI-13		DI		A1	8	12									
35423A-DI-14		DI		A1	8	13									
35423A-DI-15		DI		A1	8	14									
35423A-DI-16		DI		A1	8	15									
1756-IB16D DC (10-30V) ISOLATED INPUT MODULE															
35423A-DI-17	CS_IT_HTRA_OVRTMP_IND	DI	DUCT CS/IT HEATER 201A OVER TEMPERATURE SWITCH INDICATION	A1	9	0	OTS-201A	35423 – J34	I-085	TB6 +D130G	TB3 D1R	I-094	10 – 30 VDC	OVER TEMP/NOT OVER TEMP	–
35423A-DI-18	CS_FS_HTRA_OVRTMP_IND	DI	DUCT CS/FS HEATER 211A OVER TEMPERATURE SWITCH INDICATION	A1	9	1	OTS-211A	35423 – J35	I-085	TB6 +D130H	TB3 D1R	I-094	10 – 30 VDC	OVER TEMP/NOT OVER TEMP	–
35423A-DI-19	SM_HTRA_OVRTMP_IND	DI	DUCT SM HEATER 221A OVER TEMPERATURE SWITCH INDICATION	A1	9	2	OTS-221A	35423 – J37	I-085	TB6 +D130A	TB3 D1R	I-094	10 – 30 VDC	OVER TEMP/NOT OVER TEMP	–
35423A-DI-20	CS_AFT_HTRA_OVRTMP_IND	DI	DUCT CS/AFT HEATER 231A OVER TEMPERATURE SWITCH INDICATION	A1	9	3	OTS-231A	35423 – J31	I-085	TB6 +D130E	TB3 D1R	I-094	10 – 30 VDC	OVER TEMP/NOT OVER TEMP	–
† 35423A-DI-21	SPARE1_HTRA_OVRTMP_IND	DI	SPARE DUCT 1 HEATER 241A OVER TEMPERATURE INDICATION	A1	9	4	OTS-241A	35423 – J23	I-085	TB6 +D130B	TB3 D1R	I-094	10 – 30 VDC	OVER TEMP/NOT OVER TEMP	–
35423A-DI-22	LAS_HTRA_OVRTMP_IND	DI	DUCT LAS HEATER 251A OVER TEMPERATURE SWITCH INDICATION	A1	9	5	OTS-251A	35423 – J39	I-085	TB6 +D130C	TB3 D1R	I-094	10 – 30 VDC	OVER TEMP/NOT OVER TEMP	–
35423A-DI-23	EC_CC_HTRA_OVRTMP_IND	DI	DUCT EC/CC HEATER 261A OVER TEMPERATURE SWITCH INDICATION	A1	9	6	OTS-261A	35423 – J41	I-085	TB6 +D130B	TB3 D1R	I-094	10 – 30 VDC	OVER TEMP/NOT OVER TEMP	–
35423A-DI-24	CS_ENG_HTRA_OVRTMP_IND	DI	DUCT CS/ENG HEATER 271A OVER TEMPERATURE SWITCH INDICATION	A1	9	7	OTS-271A	35423 – J59	I-085	TB6 +D130F	TB3 D1R	I-094	10 – 30 VDC	OVER TEMP/NOT OVER TEMP	–
† 35423A-DI-25	SPARE2_HTRA_OVRTMP_IND	DI	SPARE DUCT 2 HEATER 281A OVER TEMPERATURE INDICATION	A1	9	8	OTS-281A	35423 – J24	I-085	TB6 +D130C	TB3 D1R	I-094	10 – 30 VDC	OVER TEMP/NOT OVER TEMP	–
† 35423A-DI-26	SPARE3_HTRA_OVRTMP_IND	DI	SPARE DUCT 3 HEATER 291A OVER TEMPERATURE INDICATION	A1	9	9	OTS-291A	35423 – J26	I-085	TB6 +D130D	TB3 D1R	I-094	10 – 30 VDC	OVER TEMP/NOT OVER TEMP	–
35423A-DI-27	ICPS_HTRA_OVRTMP_IND	DI	DUCT ICPS HEATER 301A OVER TEMPERATURE SWITCH INDICATION	A1	9	10	OTS-301A	35423 – J43	I-085	TB6 +D130D	TB3 D1R	I-094	10 – 30 VDC	OVER TEMP/NOT OVER TEMP	–
† 35423A-DI-28	SPARE4_HTRA_OVRTMP_IND	DI	SPARE DUCT 4 HEATER 311A OVER TEMPERATURE INDICATION	A1	9	11	OTS-311A	35423 – J27	I-085	TB6 +D130E	TB3 D1R	I-094	10 – 30 VDC	OVER TEMP/NOT OVER TEMP	–
35423A-DI-29		DI		A1	9	12									
35423A-DI-30		DI		A1	9	13									
35423A-DI-31		DI		A1	9	14									
35423A-DI-32		DI		A1	9	15									
1756-OX8I AC(10-265V) / DC(5-150V) ISOLATED RELAY MODULE															
35423A-DO-1		DO		A1	10	0									
35423A-DO-2		DO		A1	10	1									
35423A-DO-3		DO		A1	10	2									
35423A-DO-4		DO		A1	10	3									
35423A-DO-5		DO		A1	10	4									
35423A-DO-6		DO		A1	10	5									
35423A-DO-7		DO		A1	10	6									
35423A-DO-8		DO		A1	10	7									

NOTES:

1. ALL CELLS MARKED TBD SHALL BE DETERMINED BY THE CONTRACTOR AFTER FINAL EQUIPMENT SELECTION.
2. ALL BLANK ROWS ARE SPARE I/O POINTS.
3. REFERENCE SHEET I-022 FOR ENCLOSURE 35423 CONTROLS ONE-LINES.
4. THE CONTRACTOR SHALL MODIFY THE EXISTING KGCS SOFTWARE AND PLC CONFIGURATION FOR USE IN THE CONTRACTOR PROVIDED REDUNDANT PLC SYSTEM IN ACCORDANCE WITH THE TAG INDEX TABLE ON THIS SHEET AND THE SEQUENCE OF OPERATIONS ON SHEETS I-102 THROUGH I-104.
5. CHANNEL ASSIGNMENTS FOR SPARE DUCTS ARE FOR INSTALL OPTION. THESE CHANNELS ARE DENOTED BY "†" SYMBOL.

SYM	ZONE	DESCRIPTION	DATE	APPROVED
REVISIONS				

JACOBS
Jacobs Technology Inc.

SIGNATURES		DATE
DRAWN	M. HENNIGH	3/07/14
CHECKED	J. WHITEFORD	3/07/14
SUBMITTED	S. RITTER	3/07/14
ST OF LICENSURE: TN LICENSE NO: 00110556		
APPROVED	G. WARD	3/07/14
	S. HUNT	3/07/14

NATIONAL AERONAUTICS AND SPACE ADMINISTRATION
JOHN F. KENNEDY SPACE CENTER, NASA
KENNEDY SPACE CENTER, FLORIDA

KSC LAUNCH PAD 39-B
ENVIRONMENTAL CONTROL SYSTEM (ECS) REFURBISHMENT
INSTRUMENTATION
ECS LP SYSTEM A1/B1 CHASSIS 35423
TAG INDEX SHEET1

FILE NO.	SIZE	DWG.NO.	REV
I-018	F	79K39602	
PCN. NO. 98898		SHEET 101 OF 187	

ECS RIO CABINET 35423 SYSTEM A1 (CONTINUED FROM SHEET I-018)

IDENT	TAG NAME	I/O TYPE	DESCRIPTION	RACK	SLOT	CH	DEVICE TAG	ENCLOSURE INTERFACE CONNECTOR	DEVICE REFERENCE SCHEMATIC	POWER SOURCE/BUS	POWER RETURN/ NEUTRAL	POWER REFERENCE SCHEMATIC	SIGNAL TYPE	SENSOR RANGE	UNITS
1756-OX8I AC(10-265V) / DC(5-150V) ISOLATED RELAY MODULE															
35423A-DO-9		DO		A1	11	0									
35423A-DO-10		DO		A1	11	1									
35423A-DO-11		DO		A1	11	2									
35423A-DO-12		DO		A1	11	3									
35423A-DO-13		DO		A1	11	4									
35423A-DO-14		DO		A1	11	5									
35423A-DO-15		DO		A1	11	6									
35423A-DO-16		DO		A1	11	7									
1756-OX8I AC(10-265V) / DC(5-150V) ISOLATED RELAY MODULE															
35423A-DO-17	GN2_REG_PRV_702B_SEC_SEL_HI_CMD	DO	GN2 REGULATOR PRV-702B SECONDARY SELECT HIGH COMMAND	A1	12	0	PRV-702B	35423 - J14	I-078	N/A	N/A	-	1 N.O./1 N.C.	A1 SELECT / B1 SELECT	-
35423A-DO-18	GN2_REG_PRV_702B_SEC_SEL_LO_CMD	DO	GN2 REGULATOR PRV-702B SECONDARY SELECT LOW COMMAND	A1	12	1	PRV-702B	35423 - J14	I-078	N/A	N/A	-	1 N.O./1 N.C.	A1 SELECT / B1 SELECT	-
35423A-DO-19		DO		A1	12	2									
35423A-DO-20		DO		A1	12	3									
35423A-DO-21		DO		A1	12	4									
35423A-DO-22		DO		A1	12	5									
35423A-DO-23		DO		A1	12	6									
35423A-DO-24		DO		A1	12	7									
1756-OB8EI DC (10-30V) ELECTRONICALLY FUSED ISOLATED OUTPUT MODULE															
35423A-DO-25	35423_D120_ON_CMD	DO	35423 - D120 INSTRUMENT BUS POWER ON COMMAND	A1	13	0	K1	N/A	I-093	TB1 +D110	TB3 D1R	I-093	10 - 30 VDC	PWR ON/ PWR OFF	-
35423A-DO-26	35423_D121_ON_CMD	DO	35423 - D121 COMMAND BUS POWER ON COMMAND	A1	13	1	K2	N/A	I-093	TB1 +D110	TB3 D1R	I-093	10 - 30 VDC	PWR ON/ PWR OFF	-
35423A-DO-27		DO		A1	13	2									
35423A-DO-28		DO		A1	13	3									
35423A-DO-29		DO		A1	13	4									
35423A-DO-30		DO		A1	13	5									
35423A-DO-31		DO		A1	13	6									
35423A-DO-32		DO		A1	13	7									
1756-OB8EI DC (10-30V) ELECTRONICALLY FUSED ISOLATED OUTPUT MODULE															
35423A-DO-33	35423_D130A_ON_CMD	DO	35423 - D130A INSTRUMENT BUS POWER ON COMMAND	A1	14	0	TB6 +D130A	N/A	I-094	TB6 +D120	TB3 D1R	I-094	10 - 30 VDC	PWR ON/ PWR OFF	-
35423A-DO-34	35423_D130B_ON_CMD	DO	35423 - D130B INSTRUMENT BUS POWER ON COMMAND	A1	14	1	TB6 +D130B	N/A	I-094	TB6 +D120	TB3 D1R	I-094	10 - 30 VDC	PWR ON/ PWR OFF	-
35423A-DO-35	35423_D130C_ON_CMD	DO	35423 - D130C INSTRUMENT BUS POWER ON COMMAND	A1	14	2	TB6 +D130C	N/A	I-094	TB6 +D120	TB3 D1R	I-094	10 - 30 VDC	PWR ON/ PWR OFF	-
35423A-DO-36	35423_D130D_ON_CMD	DO	35423 - D130D INSTRUMENT BUS POWER ON COMMAND	A1	14	3	TB6 +D130D	N/A	I-094	TB6 +D120	TB3 D1R	I-094	10 - 30 VDC	PWR ON/ PWR OFF	-
35423A-DO-37	35423_D130E_ON_CMD	DO	35423 - D130E INSTRUMENT BUS POWER ON COMMAND	A1	14	4	TB6 +D130E	N/A	I-094	TB6 +D120	TB3 D1R	I-094	10 - 30 VDC	PWR ON/ PWR OFF	-
35423A-DO-38	35423_D130F_ON_CMD	DO	35423 - D130F INSTRUMENT BUS POWER ON COMMAND	A1	14	5	TB6 +D130F	N/A	I-094	TB6 +D120	TB3 D1R	I-094	10 - 30 VDC	PWR ON/ PWR OFF	-
35423A-DO-39	35423_D130G_ON_CMD	DO	35423 - D130G INSTRUMENT BUS POWER ON COMMAND	A1	14	6	TB6 +D130G	N/A	I-094	TB6 +D120	TB3 D1R	I-094	10 - 30 VDC	PWR ON/ PWR OFF	-
35423A-DO-40	35423_D130H_ON_CMD	DO	35423 - D130H INSTRUMENT BUS POWER ON COMMAND	A1	14	7	TB6 +D130H	N/A	I-094	TB6 +D120	TB3 D1R	I-094	10 - 30 VDC	PWR ON/ PWR OFF	-
1756-OB8EI DC (10-30V) ELECTRONICALLY FUSED ISOLATED OUTPUT MODULE															
35423A-DO-41	35423_D131A_ON_CMD	DO	35423 - D131A COMMAND BUS POWER ON COMMAND	A1	15	0	TB7 +D131A	N/A	I-094	TB7 +D121	TB3 D1R	I-094	10 - 30 VDC	PWR ON/ PWR OFF	-
35423A-DO-42	35423_D131B_ON_CMD	DO	35423 - D131B COMMAND BUS POWER ON COMMAND	A1	15	1	TB7 +D131B	N/A	I-094	TB7 +D121	TB3 D1R	I-094	10 - 30 VDC	PWR ON/ PWR OFF	-
35423A-DO-43	35423_D131C_ON_CMD	DO	35423 - D131C COMMAND BUS POWER ON COMMAND	A1	15	2	TB7 +D131C	N/A	I-094	TB7 +D121	TB3 D1R	I-094	10 - 30 VDC	PWR ON/ PWR OFF	-
35423A-DO-44	35423_D131D_ON_CMD	DO	35423 - D131D COMMAND BUS POWER ON COMMAND	A1	15	3	TB7 +D131D	N/A	I-094	TB7 +D121	TB3 D1R	I-094	10 - 30 VDC	PWR ON/ PWR OFF	-
35423A-DO-45	35423_D131E_ON_CMD	DO	35423 - D131E COMMAND BUS POWER ON COMMAND	A1	15	4	TB7 +D131E	N/A	I-094	TB7 +D121	TB3 D1R	I-094	10 - 30 VDC	PWR ON/ PWR OFF	-
35423A-DO-46	35423_D131F_ON_CMD	DO	35423 - D131F COMMAND BUS POWER ON COMMAND	A1	15	5	TB7 +D131F	N/A	I-094	TB7 +D121	TB3 D1R	I-094	10 - 30 VDC	PWR ON/ PWR OFF	-
35423A-DO-47	35423_D131G_ON_CMD	DO	35423 - D131G COMMAND BUS POWER ON COMMAND	A1	15	6	TB7 +D131G	N/A	I-094	TB7 +D121	TB3 D1R	I-094	10 - 30 VDC	PWR ON/ PWR OFF	-
35423A-DO-48	35423_D131H_ON_CMD	DO	35423 - D131H COMMAND BUS POWER ON COMMAND	A1	15	7	TB7 +D131H	N/A	I-094	TB7 +D121	TB3 D1R	I-094	10 - 30 VDC	PWR ON/ PWR OFF	-
1756-OB8EI DC (10-30V) ELECTRONICALLY FUSED ISOLATED OUTPUT MODULE															
35423A-DO-49		DO		A1	16	0									
35423A-DO-50		DO		A1	16	1									
35423A-DO-51		DO		A1	16	2									
35423A-DO-52		DO		A1	16	3									
35423A-DO-53		DO		A1	16	4									
35423A-DO-54		DO		A1	16	5									
35423A-DO-55		DO		A1	16	6									
35423A-DO-56		DO		A1	16	7									

NOTES:

1. ALL CELLS MARKED TBD SHALL BE DETERMINED BY THE CONTRACTOR AFTER FINAL EQUIPMENT SELECTION.
2. ALL BLANK ROWS ARE SPARE I/O POINTS.
3. REFERENCE SHEET I-022 FOR ENCLOSURE 35423 CONTROLS ONE-LINES.
4. THE CONTRACTOR SHALL MODIFY THE EXISTING KCCS SOFTWARE AND PLC CONFIGURATION FOR USE IN THE CONTRACTOR PROVIDED REDUNDANT PLC SYSTEM IN ACCORDANCE WITH THE TAG INDEX TABLE ON THIS SHEET AND THE SEQUENCE OF OPERATIONS ON SHEETS I-102 THROUGH I-104.
5. CHANNEL ASSIGNMENTS FOR SPARE DUCTS ARE FOR INSTALL OPTION. THESE CHANNELS ARE DENOTED BY "†" SYMBOL.

SYM	ZONE	DESCRIPTION	DATE	APPROVED
REVISIONS				

JACOBS
Jacobs Technology Inc.

SIGNATURES		DATE
DRAWN	M. HENNIGH	3/07/14
CHECKED	J. WHITEFORD	3/07/14
SUBMITTED	S. RITTER	3/07/14
ST OF LICENSURE: TN LICENSE NO: 00110556		
APPROVED	G. WARD	3/07/14
	S. HUNT	3/07/14

NATIONAL AERONAUTICS AND SPACE ADMINISTRATION
JOHN F. KENNEDY SPACE CENTER, NASA
KENNEDY SPACE CENTER, FLORIDA

KSC LAUNCH PAD 39-B
ENVIRONMENTAL CONTROL SYSTEM (ECS) REFURBISHMENT
INSTRUMENTATION
ECS LP SYSTEM A1/B1 CHASSIS 35423
TAG INDEX SHEET 2

FILE NO.	SIZE	DWG.NO.	REV
	F	79K39602	
PCN. NO. 98898		SHEET 102 OF 187	

I-019

ECS RIO CABINET 35423 SYSTEM B1

IDENT	TAG NAME	I/O TYPE	DESCRIPTION	RACK	SLOT	CH	DEVICE TAG	ENCLOSURE INTERFACE CONNECTOR	DEVICE REFERENCE SCHEMATIC	POWER SOURCE/BUS	POWER RETURN/ NEUTRAL	POWER REFERENCE SCHEMATIC	SIGNAL TYPE	SENSOR RANGE	UNITS
1756-IF6I ISOLATED ANALOG VOLTAGE/CURRENT INPUT MODULE															
35423B-AI-1	35423_GSP_SYSB_SUP_V	AI	35423 GSP BUS B VDC (SUPPLY VOLTAGE = SIGNAL x 4)	B1	2	0	R4	N/A	I-093	N/A	TB3 D1R	I-093	0 – 10 VDC	0 – 10	VDC
35423B-AI-2		AI		B1	2	1									
35423B-AI-3		AI		B1	2	2									
35423B-AI-4		AI		B1	2	3									
35423B-AI-5		AI		B1	2	4									
35423B-AI-6		AI		B1	2	5									
1756-IF6I ISOLATED ANALOG VOLTAGE/CURRENT INPUT MODULE															
35423B-AI-7	GN2_REG_PRV_702A_SEC_PCT_OPN_IND	AI	GN2 REGULATOR PRV-702A SECONDARY PERCENT OPEN INDICATION	B1	3	0	PRV-702A	35423 – J13	I-078	TB6 +D130A	TB3 D1R	I-094	4 – 20mA	0 – 100	%OPEN
35423B-AI-8	GN2_REG_PRV_702B_PRI_PCT_OPN_IND	AI	GN2 REGULATOR PRV-702B PRIMARY PERCENT OPEN INDICATION	B1	3	1	PRV-702B	35423 – J14	I-078	TB8 +D230A	TB3 D1R	I-094	4 – 20mA	0 – 100	%OPEN
35423B-AI-9		AI		B1	3	2									
35423B-AI-10		AI		B1	3	3									
35423B-AI-11		AI		B1	3	4									
35423B-AI-12		AI		B1	3	5									
1756-OF8 VOLTAGE/CURRENT ANALOG OUTPUT MODULE															
35423B-AO-1	GN2_REG_PRV_702A_SEC_OUT_ADJ	AO	GN2 REGULATOR PRV-702A SECONDARY OUTPUT ADJUSTMENT	B1	5	0	PRV-702A	35423 – J13	I-078	CHAN I/O	CHAN I/O	–	0 – 10 VDC	0 – 100	%OPEN
35423B-AO-2	GN2_REG_PRV_702B_PRI_OUT_ADJ	AO	GN2 REGULATOR PRV-702B PRIMARY OUTPUT ADJUSTMENT	B1	5	1	PRV-702B	35423 – J14	I-078	CHAN I/O	CHAN I/O	–	0 – 10 VDC	0 – 100	%OPEN
35423B-AO-3		AO		B1	5	2									
35423B-AO-4		AO		B1	5	3									
35423B-AO-5		AO		B1	5	4									
35423B-AO-6		AO		B1	5	5									
35423B-AO-7		AO		B1	5	6									
35423B-AO-8		AO		B1	5	7									
1756-OF8 VOLTAGE/CURRENT ANALOG OUTPUT MODULE															
35423B-AO-9		AO		B1	6	0									
35423B-AO-10	CS_IT_HTR2_OUT_TEMP_ADJ	AO	DUCT CS/IT HEATER 201B OUTLET TEMPERATURE ADJUSTMENT	B1	6	1	H-201B	35423 – J55	I-091	CHAN I/O	CHAN I/O	–	0 – 10 VDC	0 – 100	%KW
35423B-AO-11		AO		B1	6	2									
35423B-AO-12	CS_AFT_HTR2_OUT_TEMP_ADJ	AO	DUCT CS/AFT HEATER 231B OUTLET TEMPERATURE ADJUSTMENT	B1	6	3	H-231B	35423 – J54	I-091	CHAN I/O	CHAN I/O	–	0 – 10 VDC	0 – 100	%KW
35423B-AO-13		AO		B1	6	4									
35423B-AO-14		AO		B1	6	5									
35423B-AO-15	ICPS_HTR2_OUT_TEMP_ADJ	AO	DUCT ICPS HEATER 301B OUTLET TEMPERATURE ADJUSTMENT	B1	6	6	H-301B	35423 – J52	I-091	CHAN I/O	CHAN I/O	–	0 – 10 VDC	0 – 100	%KW
† 35423B-AO-16	SPARE4_HTR2_OUT_TEMP_ADJ	AO	SPARE DUCT 4 HEATER 311B OUTLET TEMPERATURE ADJUSTMENT	B1	6	7	H-311B	35423 – J19	I-091	CHAN I/O	CHAN I/O	–	0 – 10 VDC	0 – 100	%KW
1756-OF8 VOLTAGE/CURRENT ANALOG OUTPUT MODULE															
35423B-AO-17	CS_FS_HTR2_OUT_TEMP_ADJ	AO	DUCT CS/FS HEATER 211B OUTLET TEMPERATURE ADJUSTMENT	B1	7	0	H-211B	35423 – J49	I-091	CHAN I/O	CHAN I/O	–	0 – 10 VDC	0 – 100	%KW
35423B-AO-18	SM_HTR2_OUT_TEMP_ADJ	AO	DUCT SM HEATER 221B OUTLET TEMPERATURE ADJUSTMENT	B1	7	1	H-221B	35423 – J46	I-091	CHAN I/O	CHAN I/O	–	0 – 10 VDC	0 – 100	%KW
† 35423B-AO-19	SPARE1_HTR2_OUT_TEMP_ADJ	AO	SPARE DUCT 1 HEATER 241B OUTLET TEMPERATURE ADJUSTMENT	B1	7	2	H-241B	35423 – J20	I-091	CHAN I/O	CHAN I/O	–	0 – 10 VDC	0 – 100	%KW
35423B-AO-20	LAS_HTR2_OUT_TEMP_ADJ	AO	DUCT LAS HEATER 251B OUTLET TEMPERATURE ADJUSTMENT	B1	7	3	H-251B	35423 – J48	I-091	CHAN I/O	CHAN I/O	–	0 – 10 VDC	0 – 100	%KW
35423B-AO-21	EC_CC_HTR2_OUT_TEMP_ADJ	AO	DUCT EC/CC HEATER 261B OUTLET TEMPERATURE ADJUSTMENT	B1	7	4	H-261B	35423 – J28	I-091	CHAN I/O	CHAN I/O	–	0 – 10 VDC	0 – 100	%KW
35423B-AO-22	CS_ENG_HTR2_OUT_TEMP_ADJ	AO	DUCT CS/ENG HEATER 271B OUTLET TEMPERATURE ADJUSTMENT	B1	7	5	H-271B	35423 – J58	I-091	CHAN I/O	CHAN I/O	–	0 – 10 VDC	0 – 100	%KW
† 35423B-AO-23	SPARE2_HTR2_OUT_TEMP_ADJ	AO	SPARE DUCT 2 HEATER 281B OUTLET TEMPERATURE ADJUSTMENT	B1	7	6	H-281B	35423 – J21	I-091	CHAN I/O	CHAN I/O	–	0 – 10 VDC	0 – 100	%KW
† 35423B-AO-24	SPARE3_HTR2_OUT_TEMP_ADJ	AO	SPARE DUCT 3 HEATER 291B OUTLET TEMPERATURE ADJUSTMENT	B1	7	7	H-291B	35423 – J22	I-091	CHAN I/O	CHAN I/O	–	0 – 10 VDC	0 – 100	%KW
1756-IB16D DC (10-30V) ISOLATED INPUT MODULE															
35423B-DI-1	35423_D220_ON_IND	DI	35423 – D220 INSTRUMENT BUS POWER ON INDICATION	B1	8	0	TB8 +D220	N/A	I-093	TB8 +D220	TB3 D1R	I-093	10 –30 VDC	PWR ON/ PWR OFF	–
35423B-DI-2	35423_D221_ON_IND	DI	35423 – D221 INSTRUMENT BUS POWER ON INDICATION	B1	8	1	TB9 +D221	N/A	I-093	TB9 +D221	TB3 D1R	I-093	10 –30 VDC	PWR ON/ PWR OFF	–
35423B-DI-3		DI		B1	8	2									
35423B-DI-4		DI		B1	8	3									
35423B-DI-5		DI		B1	8	4									
35423B-DI-6		DI		B1	8	5									
35423B-DI-7		DI		B1	8	6									
35423B-DI-8		DI		B1	8	7									
35423B-DI-9		DI		B1	8	8									
35423B-DI-10		DI		B1	8	9									
35423B-DI-11		DI		B1	8	10									
35423B-DI-12		DI		B1	8	11									
35423B-DI-13		DI		B1	8	12									
35423B-DI-14		DI		B1	8	13									
35423B-DI-15		DI		B1	8	14									
35423B-DI-16		DI		B1	8	15									
1756-IB16D DC (10-30V) ISOLATED INPUT MODULE															
35423B-DI-17	CS_IT_HTRB_OVRTMP_IND	DI	DUCT CS/IT HEATER-201B OVER TEMPERATURE SWITCH INDICATION	B1	9	0	OTS-201B	35423 – J33	I-085	TB8 +D230G	TB3 D1R	I-094	10 – 30 VDC	OVER TEMP/NOT OVER TEMP	–
35423B-DI-18	CS_FS_HTRB_OVRTMP_IND	DI	DUCT CS/FS HEATER-211B OVER TEMPERATURE SWITCH INDICATION	B1	9	1	OTS-211B	35423 – J36	I-085	TB8 +D230H	TB3 D1R	I-094	10 – 30 VDC	OVER TEMP/NOT OVER TEMP	–
35423B-DI-19	SM_HTRB_OVRTMP_IND	DI	DUCT SM HEATER-221B OVER TEMPERATURE SWITCH INDICATION	B1	9	2	OTS-221B	35423 – J38	I-085	TB8 +D230A	TB3 D1R	I-094	10 – 30 VDC	OVER TEMP/NOT OVER TEMP	–
35423B-DI-20	CS_AFT_HTRB_OVRTMP_IND	DI	DUCT CS/AFT HEATER-231B OVER TEMPERATURE SWITCH INDICATION	B1	9	3	OTS-231B	35423 – J32	I-085	TB8 +D230E	TB3 D1R	I-094	10 – 30 VDC	OVER TEMP/NOT OVER TEMP	–
† 35423B-DI-21	SPARE1_HTRB_OVRTMP_IND	DI	SPARE DUCT 1 HEATER 241B OVER TEMPERATURE INDICATION	B1	9	4	OTS-241B	35423 – J29	I-085	TB8 +D230B	TB3 D1R	I-094	10 – 30 VDC	OVER TEMP/NOT OVER TEMP	–
35423B-DI-22	LAS_HTRB_OVRTMP_IND	DI	DUCT LAS HEATER-251B OVER TEMPERATURE SWITCH INDICATION	B1	9	5	OTS-251B	35423 – J40	I-085	TB8 +D230C	TB3 D1R	I-094	10 – 30 VDC	OVER TEMP/NOT OVER TEMP	–
35423B-DI-23	EC_CC_HTRB_OVRTMP_IND	DI	DUCT EC/CC HEATER-261B OVER TEMPERATURE SWITCH INDICATION	B1	9	6	OTS-261B	35423 – J42	I-085	TB8 +D230B	TB3 D1R	I-094	10 – 30 VDC	OVER TEMP/NOT OVER TEMP	–
35423B-DI-24	CS_ENG_HTRB_OVRTMP_IND	DI	DUCT CS/ENG HEATER-271B OVER TEMPERATURE SWITCH INDICATION	B1	9	7	OTS-271B	35423 – J60	I-085	TB8 +D230F	TB3 D1R	I-094	10 – 30 VDC	OVER TEMP/NOT OVER TEMP	–
† 35423B-DI-25	SPARE2_HTRB_OVRTMP_IND	DI	SPARE DUCT 2 HEATER 281B OVER TEMPERATURE INDICATION	B1	9	8	OTS-281B	35423 – J30	I-085	TB8 +D230C	TB3 D1R	I-094	10 – 30 VDC	OVER TEMP/NOT OVER TEMP	–
† 35423B-DI-26	SPARE3_HTRB_OVRTMP_IND	DI	SPARE DUCT 3 HEATER 291B OVER TEMPERATURE INDICATION	B1	9	9	OTS-291B	35423 – J61	I-085	TB8 +D230D	TB3 D1R	I-094	10 – 30 VDC	OVER TEMP/NOT OVER TEMP	–
35423B-DI-27	ICPS_HTRB_OVRTMP_IND	DI	DUCT ICPS HEATER-301B OVER TEMPERATURE SWITCH INDICATION	B1	9	10	OTS-301B	35423 – J44	I-085	TB8 +D230D	TB3 D1R	I-094	10 – 30 VDC	OVER TEMP/NOT OVER TEMP	–
† 35423B-DI-28	SPARE4_HTRB_OVRTMP_IND	DI	SPARE DUCT 4 HEATER 311B OVER TEMPERATURE INDICATION	B1	9	11	OTS-311B	35423 – J62	I-085	TB8 +D230E	TB3 D1R	I-094	10 – 30 VDC	OVER TEMP/NOT OVER TEMP	–
35423B-DI-29		DI		B1	9	12									
35423B-DI-30		DI		B1	9	13									
35423B-DI-31		DI		B1	9	14									
35423B-DI-32		DI		B1	9	15									

NOTES:

1. ALL CELLS MARKED TBD SHALL BE DETERMINED BY THE CONTRACTOR AFTER FINAL EQUIPMENT SELECTION.
2. ALL BLANK ROWS ARE SPARE I/O POINTS.
3. REFERENCE SHEET I-022 FOR ENCLOSURE 35423 CONTROLS ONE-LINES.
4. THE CONTRACTOR SHALL MODIFY THE EXISTING KGCS SOFTWARE AND PLC CONFIGURATION FOR USE IN THE CONTRACTOR PROVIDED REDUNDANT PLC SYSTEM IN ACCORDANCE WITH THE TAG INDEX TABLE ON THIS SHEET AND THE SEQUENCE OF OPERATIONS ON SHEETS I-102 THROUGH I-104.
5. CHANNEL ASSIGNMENTS FOR SPARE DUCTS ARE FOR INSTALL OPTION. THESE CHANNELS ARE DENOTED BY "†" SYMBOL.

SYM	ZONE	DESCRIPTION	DATE	APPROVED
REVISIONS				

JACOBS™
Jacobs Technology Inc.

SIGNATURES		DATE
DRAWN	M. HENNIGH	3/07/14
CHECKED	J. WHITEFORD	3/07/14
SUBMITTED	S. RITTER	3/07/14
ST OF LICENSURE: TN LICENSE NO: 00110556		
APPROVED	G. WARD	3/07/14
	S. HUNT	3/07/14

NATIONAL AERONAUTICS AND SPACE ADMINISTRATION
JOHN F. KENNEDY SPACE CENTER, NASA
KENNEDY SPACE CENTER, FLORIDA

KSC LAUNCH PAD 39-B
ENVIRONMENTAL CONTROL SYSTEM (ECS) REFURBISHMENT
INSTRUMENTATION
ECS LP SYSTEM A1/B1 CHASSIS 35423
TAG INDEX SHEET 3

FILE NO.	SIZE	DWG.NO.	REV
	F	79K39602	
PCN. NO. 98898		SHEET 103 OF 187	

I-020

ECS RIO CABINET 35423 SYSTEM B1 (CONTINUED FROM SHEET I-020)

IDENT	TAG NAME	I/O TYPE	DESCRIPTION	RACK	SLOT	CH	DEVICE TAG	ENCLOSURE INTERFACE CONNECTOR	DEVICE REFERENCE SCHEMATIC	POWER SOURCE/BUS	POWER RETURN/ NEUTRAL	POWER REFERENCE SCHEMATIC	SIGNAL TYPE	SENSOR RANGE	UNITS
1756-OX8I AC(10-265V) / DC(5-150V) ISOLATED RELAY MODULE															
35423B-DO-1		DO		B1	11	0									
35423B-DO-2		DO		B1	11	1									
35423B-DO-3		DO		B1	11	2									
35423B-DO-4		DO		B1	11	3									
35423B-DO-5		DO		B1	11	4									
35423B-DO-6		DO		B1	11	5									
35423B-DO-7		DO		B1	11	6									
35423B-DO-8		DO		B1	11	7									
1756-OX8I AC(10-265V) / DC(5-150V) ISOLATED RELAY MODULE															
35423B-DO-9	GN2_REG_PRV_702A_PRI_SEL_HI_CMD	DO	GN2 REGULATOR PRV-702A PRIMARY SELECT HIGH COMMAND	B1	12	0	PRV-702A	35423 - J13	I-078	N/A	N/A	-	1 N.O./1 N.C.	A1 SELECT / B1 SELECT	-
35423B-DO-10	GN2_REG_PRV_702A_PRI_SEL_LO_CMD	DO	GN2 REGULATOR PRV-702A PRIMARY SELECT LOW COMMAND	B1	12	1	PRV-702A	35423 - J13	I-078	N/A	N/A	-	1 N.O./1 N.C.	A1 SELECT / B1 SELECT	-
35423B-DO-11		DO		B1	12	2									
35423B-DO-12		DO		B1	12	3									
35423B-DO-13		DO		B1	12	4									
35423B-DO-14		DO		B1	12	5									
35423B-DO-15		DO		B1	12	6									
35423B-DO-16		DO		B1	12	7									
1756-OB8EI DC (10-30V) ELECTRONICALLY FUSED ISOLATED OUTPUT MODULE															
35423B-DO-17	35423_D220_ON_CMD	DO	35423 - D220 INSTRUMENT BUS POWER ON COMMAND	B1	13	0	K3	N/A	I-093	TB2 +D210	TB3 D1R	I-093	10 - 30 VDC	PWR ON/ PWR OFF	-
35423B-DO-18	35423_D221_ON_CMD	DO	35423 - D221 COMMAND BUS POWER ON COMMAND	B1	13	1	K4	N/A	I-093	TB2 +D210	TB3 D1R	I-093	10 - 30 VDC	PWR ON/ PWR OFF	-
35423B-DO-19		DO		B1	13	2									
35423B-DO-20		DO		B1	13	3									
35423B-DO-21		DO		B1	13	4									
35423B-DO-22		DO		B1	13	5									
35423B-DO-23		DO		B1	13	6									
35423B-DO-24		DO		B1	13	7									
1756-OB8EI DC (10-30V) ELECTRONICALLY FUSED ISOLATED OUTPUT MODULE															
35423B-DO-25	35423_D230A_ON_CMD	DO	35423 - D230A INSTRUMENT BUS POWER ON COMMAND	B1	14	0	TB8 +D230A	N/A	I-094	TB8 +D220	TB3 D1R	I-094	10 - 30 VDC	PWR ON/ PWR OFF	-
35423B-DO-26	35423_D230B_ON_CMD	DO	35423 - D230B INSTRUMENT BUS POWER ON COMMAND	B1	14	1	TB8 +D230B	N/A	I-094	TB8 +D220	TB3 D1R	I-094	10 - 30 VDC	PWR ON/ PWR OFF	-
35423B-DO-27	35423_D230C_ON_CMD	DO	35423 - D230C INSTRUMENT BUS POWER ON COMMAND	B1	14	2	TB8 +D230C	N/A	I-094	TB8 +D220	TB3 D1R	I-094	10 - 30 VDC	PWR ON/ PWR OFF	-
35423B-DO-28	35423_D230D_ON_CMD	DO	35423 - D230D INSTRUMENT BUS POWER ON COMMAND	B1	14	3	TB8 +D230D	N/A	I-094	TB8 +D220	TB3 D1R	I-094	10 - 30 VDC	PWR ON/ PWR OFF	-
35423B-DO-29	35423_D230E_ON_CMD	DO	35423 - D230E INSTRUMENT BUS POWER ON COMMAND	B1	14	4	TB8 +D230E	N/A	I-094	TB8 +D220	TB3 D1R	I-094	10 - 30 VDC	PWR ON/ PWR OFF	-
35423B-DO-30	35423_D230F_ON_CMD	DO	35423 - D230F INSTRUMENT BUS POWER ON COMMAND	B1	14	5	TB8 +D230F	N/A	I-094	TB8 +D220	TB3 D1R	I-094	10 - 30 VDC	PWR ON/ PWR OFF	-
35423B-DO-31	35423_D230G_ON_CMD	DO	35423 - D230G INSTRUMENT BUS POWER ON COMMAND	B1	14	6	TB8 +D230G	N/A	I-094	TB8 +D220	TB3 D1R	I-094	10 - 30 VDC	PWR ON/ PWR OFF	-
35423B-DO-32	35423_D230H_ON_CMD	DO	35423 - D230H INSTRUMENT BUS POWER ON COMMAND	B1	14	7	TB8 +D230H	N/A	I-094	TB8 +D220	TB3 D1R	I-094	10 - 30 VDC	PWR ON/ PWR OFF	-
1756-OB8EI DC (10-30V) ELECTRONICALLY FUSED ISOLATED OUTPUT MODULE															
35423B-DO-33	35423_D231A_ON_CMD	DO	35423 - D231A COMMAND BUS POWER ON COMMAND	B1	15	0	TB9 +D231A	N/A	I-094	TB9 +D221	TB3 D1R	I-094	10 - 30 VDC	PWR ON/ PWR OFF	-
35423B-DO-34	35423_D231B_ON_CMD	DO	35423 - D231B COMMAND BUS POWER ON COMMAND	B1	15	1	TB9 +D231B	N/A	I-094	TB9 +D221	TB3 D1R	I-094	10 - 30 VDC	PWR ON/ PWR OFF	-
35423B-DO-35	35423_D231C_ON_CMD	DO	35423 - D231C COMMAND BUS POWER ON COMMAND	B1	15	2	TB9 +D231C	N/A	I-094	TB9 +D221	TB3 D1R	I-094	10 - 30 VDC	PWR ON/ PWR OFF	-
35423B-DO-36	35423_D231D_ON_CMD	DO	35423 - D231D COMMAND BUS POWER ON COMMAND	B1	15	3	TB9 +D231D	N/A	I-094	TB9 +D221	TB3 D1R	I-094	10 - 30 VDC	PWR ON/ PWR OFF	-
35423B-DO-37	35423_D231E_ON_CMD	DO	35423 - D231E COMMAND BUS POWER ON COMMAND	B1	15	4	TB9 +D231E	N/A	I-094	TB9 +D221	TB3 D1R	I-094	10 - 30 VDC	PWR ON/ PWR OFF	-
35423B-DO-38	35423_D231F_ON_CMD	DO	35423 - D231F COMMAND BUS POWER ON COMMAND	B1	15	5	TB9 +D231F	N/A	I-094	TB9 +D221	TB3 D1R	I-094	10 - 30 VDC	PWR ON/ PWR OFF	-
35423B-DO-39	35423_D231G_ON_CMD	DO	35423 - D231G COMMAND BUS POWER ON COMMAND	B1	15	6	TB9 +D231G	N/A	I-094	TB9 +D221	TB3 D1R	I-094	10 - 30 VDC	PWR ON/ PWR OFF	-
35423B-DO-40	35423_D231H_ON_CMD	DO	35423 - D231H COMMAND BUS POWER ON COMMAND	B1	15	7	TB9 +D231H	N/A	I-094	TB9 +D221	TB3 D1R	I-094	10 - 30 VDC	PWR ON/ PWR OFF	-
1756-OB8EI DC (10-30V) ELECTRONICALLY FUSED ISOLATED OUTPUT MODULE															
35423B-DO-41		DO		B1	16	0									
35423B-DO-42		DO		B1	16	1									
35423B-DO-43		DO		B1	16	2									
35423B-DO-44		DO		B1	16	3									
35423B-DO-45		DO		B1	16	4									
35423B-DO-46		DO		B1	16	5									
35423B-DO-47		DO		B1	16	6									
35423B-DO-48		DO		B1	16	7									

NOTES:

1. ALL CELLS MARKED TBD SHALL BE DETERMINED BY THE CONTRACTOR AFTER FINAL EQUIPMENT SELECTION.
2. ALL BLANK ROWS ARE SPARE I/O POINTS.
3. REFERENCE SHEET I-022 FOR ENCLOSURE 35423 CONTROLS ONE-LINES.
4. THE CONTRACTOR SHALL MODIFY THE EXISTING KGCS SOFTWARE AND PLC CONFIGURATION FOR USE IN THE CONTRACTOR PROVIDED REDUNDANT PLC SYSTEM IN ACCORDANCE WITH THE TAG INDEX TABLE ON THIS SHEET AND THE SEQUENCE OF OPERATIONS ON SHEETS I-102 THROUGH I-104.
5. CHANNEL ASSIGNMENTS FOR SPARE DUCTS ARE FOR INSTALL OPTION. THESE CHANNELS ARE DENOTED BY "†" SYMBOL.

SYM	ZONE	DESCRIPTION	DATE	APPROVED
REVISIONS				

JACOBS
Jacobs Technology Inc.

SIGNATURES		DATE
DRAWN	M. HENNIGH	3/07/14
CHECKED	J. WHITEFORD	3/07/14
SUBMITTED	S. RITTER	3/07/14
ST OF LICENSURE: TN LICENSE NO: 00110556		
APPROVED	G. WARD	3/07/14
	S. HUNT	3/07/14

NATIONAL AERONAUTICS AND SPACE ADMINISTRATION
JOHN F. KENNEDY SPACE CENTER, NASA
KENNEDY SPACE CENTER, FLORIDA

KSC LAUNCH PAD 39-B
ENVIRONMENTAL CONTROL SYSTEM (ECS) REFURBISHMENT
INSTRUMENTATION
ECS LP SYSTEM A1/B1 CHASSIS 35423
TAG INDEX SHEET 4

FILE NO.	SIZE	DWG.NO.	REV
	F	79K39602	
PCN. NO. 98898		SHEET 104 OF 187	

I-021

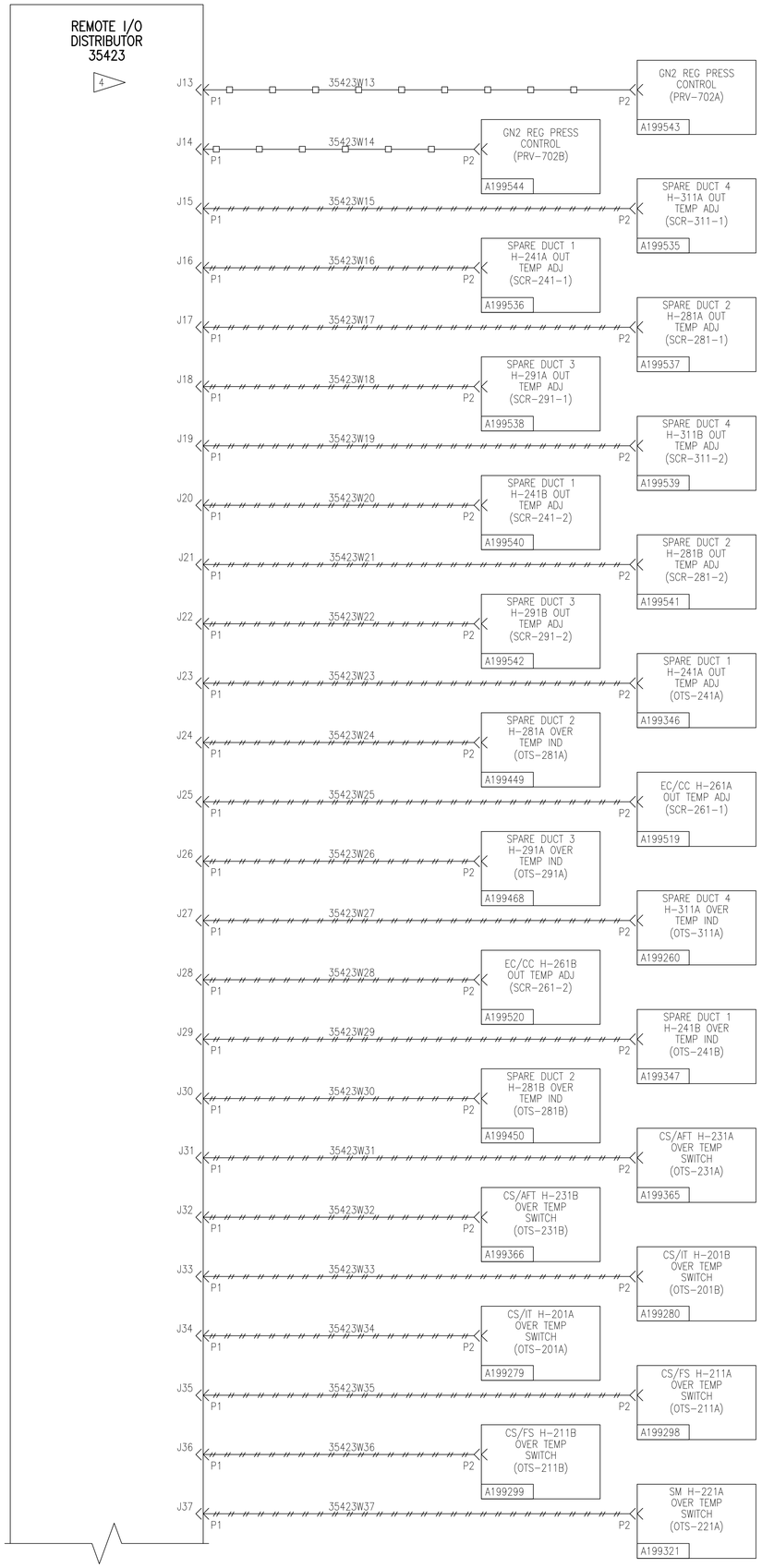

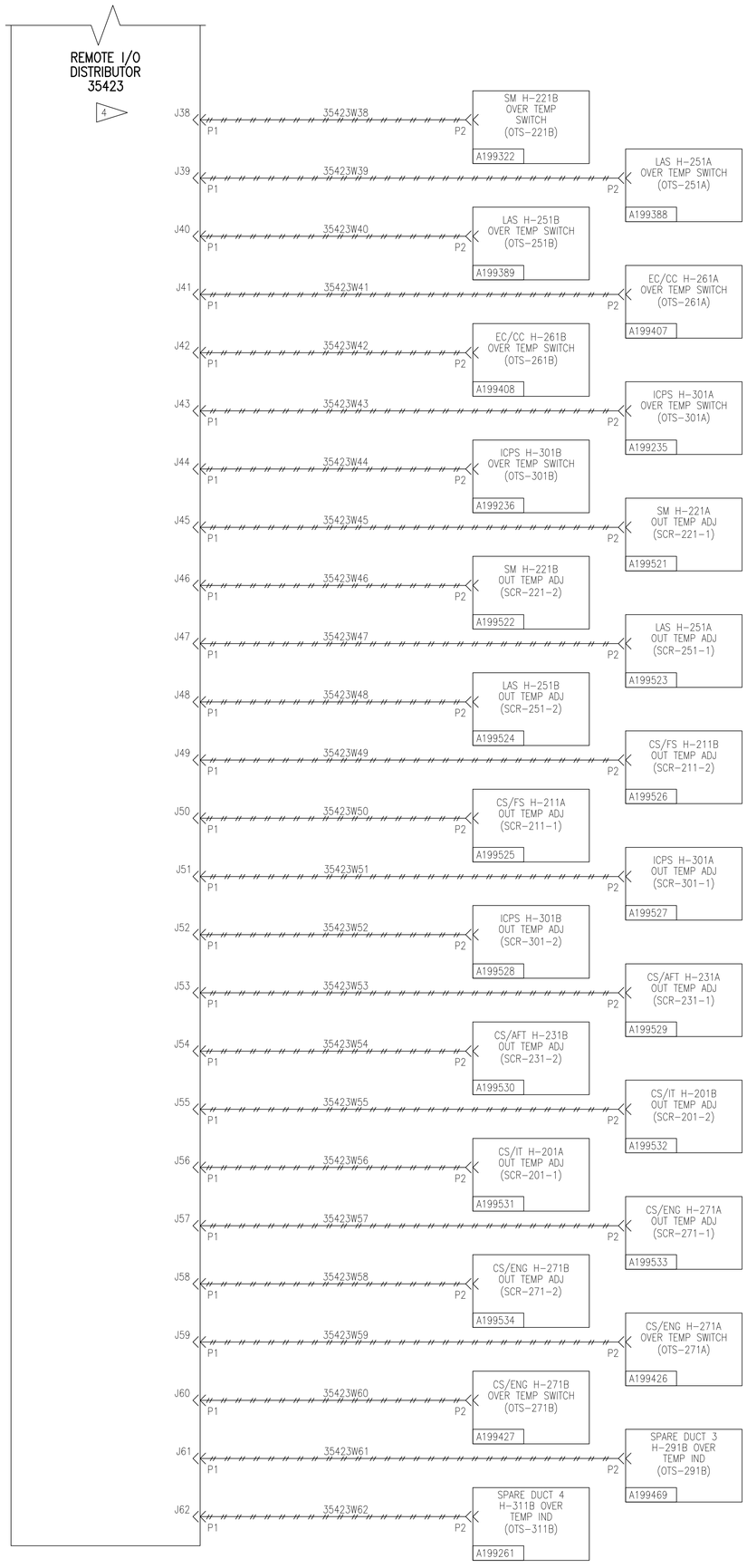

NOTES:

1. THE CONTRACTOR SHALL ADHERE TO THE FOLLOWING SPECIFICATIONS FOR ACCEPTABLE CABLE AND CONNECTOR TYPES, FABRICATION, AND INSTALLATION:
   - KSC-E-165
   - KSC-E-166
   - SSPC SP-1 GUIDELINES
   - NASA-STD-5008 (LATEST VERSION)
   - MIL-DTL-5541
   - 120E3100001 (HEAVY DUTY CABLE SPECIFICATION, GENERAL)
   - 120E3100003 (ELECTRICAL CABLE FABRICATION REQUIREMENTS)
2. THIS ONE-LINE DEPICTS FINAL CONNECTOR AND CABLING ARRANGEMENT AFTER THE REMOTE I/O CONNECTORS AND CABLING HAVE BEEN MODIFIED.
3. REFERENCE SHEETS I-014 AND I-015 FOR 28VDC POWER AND CONTROLNET CONNECTORS AND CABLING DETAILS.

4 UNLESS OTHERWISE NOTED EXISTING REMOTE I/O ENCLOSURE CABLES W13 THROUGH W62 SHALL BE REMOVED. THESE CABLES SHALL BE CAREFULLY COILED AND SAVED. THE CONTRACTOR MAY ELECT TO REUSE THESE CABLES. IN PLACE OF NEW CABLES FOR SIGNALS DESCRIBED IN ANY OF THE ONE-LINES CONTAINED WITHIN THE INSTRUMENTATION DRAWINGS. ALL CABLES THAT THE CONTRACTOR DECIDES TO REUSE MUST BE APPROVED BY THE NASA CONTRACTING OFFICER.

5. UNLESS OTHERWISE SPECIFIED ALL CABLING SHOWN ON THIS SHEET SHALL BE NEW. THESE CABLES SHALL BE PROVIDED BY AND INSTALLED BY THE CONTRACTOR.
6. REFERENCE SHEET I-101 FOR ADDITIONAL CABLE SPECIFICATION AND FABRICATION DETAILS.

7 REFERENCE NASA DOCUMENT 120E3100001, "SPECIFICATION FOR HEAVY DUTY GSE CABLE, GENERAL". ALL CABLES USED FOR THE INTERCONNECTION OF ECS EQUIPMENT AND ENCLOSURES SHALL CONFORM TO THESE SPECIFICATIONS.

8 REFERENCE APPENDIX A OF DOCUMENT 120E3100001 FOR INDIVIDUAL CABLE SPECIFICATIONS.

7 8 CABLE SPECIFICATION TABLE

LINE SYMBOL	CABLE SPECIFICATION
—□—□—	120E3100001-001
////////	120E3100001-004
— — — — —	120E3100001-051

SYM	ZONE	DESCRIPTION	DATE	APPROVED
REVISIONS				

JACOBS
Jacobs Technology Inc.

SIGNATURES		DATE
DRAWN	M. HENNIGH	3/07/14
CHECKED	J. WHITEFORD	3/07/14
SUBMITTED	S. RITTER	3/07/14
ST OF LICENSURE: TN LICENSE NO: 00110556		
APPROVED	G. WARD	3/07/14
	S. HUNT	3/07/14

NATIONAL AERONAUTICS AND SPACE ADMINISTRATION
JOHN F. KENNEDY SPACE CENTER, NASA
KENNEDY SPACE CENTER, FLORIDA

KSC LAUNCH PAD 39-B
ENVIRONMENTAL CONTROL SYSTEM (ECS) REFURBISHMENT
INSTRUMENTATION
ECS LP SYSTEM A1/B1 CHASSIS 35423
CONTROLS ONE-LINE

I-022

FILE NO.	SIZE	DWG.NO.	REV
	F	79K39602	
PCN. NO. 98898		SHEET 105 OF 187	

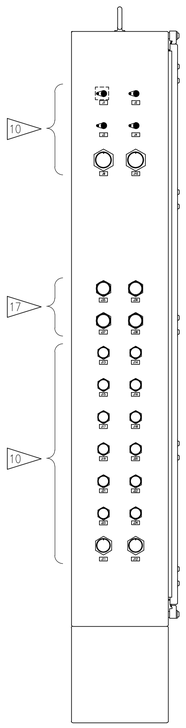

LEFT SIDE VIEW

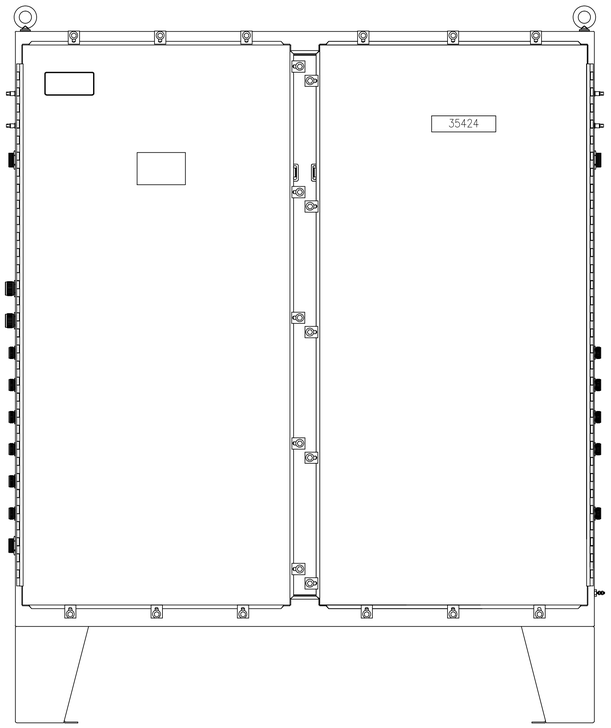

FRONT VIEW

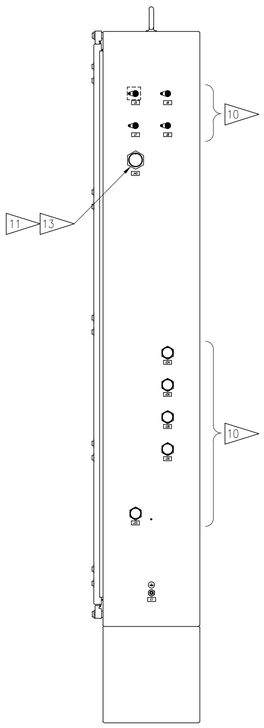

RIGHT SIDE VIEW

DETAIL 1
CONNECTOR MODIFICATIONS 15

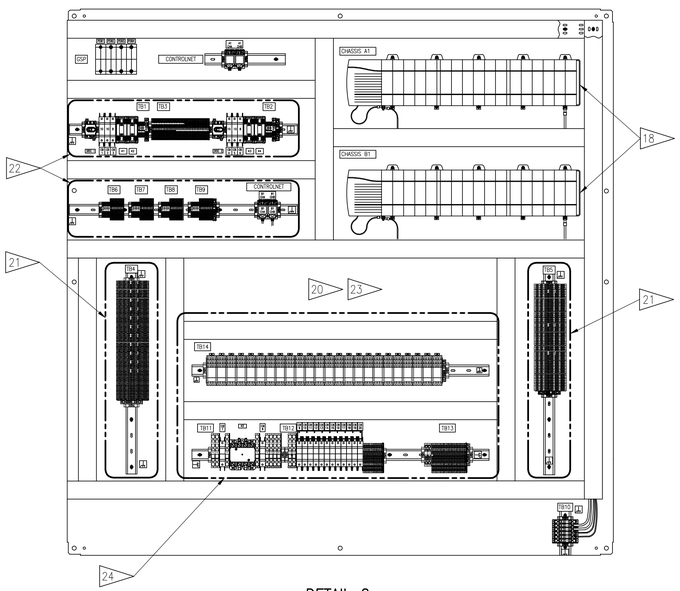

DETAIL 2
RIO ENCLOSURE MODIFICATIONS

DEMO & MODIFICATIONS NOTES:

GENERAL:

1. THIS SHEET DETAILS ALL OF THE CONNECTORS AND EQUIPMENT MODIFICATIONS REQUIRED FOR REMOTE I/O ENCLOSURE 35424.
2. CONTRACTOR SHALL BE RESPONSIBLE FOR ALL DEMOLITION, MODIFICATION, AND NEW EQUIPMENT INSTALLATION DETAILED ON SHEETS I-023 THROUGH I-029 FOR REMOTE I/O ENCLOSURE 35424.
3. UNLESS OTHERWISE SPECIFIED, FABRICATION/MODIFICATION OF ELECTRICAL GROUND SUPPORT EQUIPMENT SHALL BE IN ACCORDANCE WITH KSC-E-165 AND KSC-E-166.
4. UNLESS OTHERWISE SPECIFIED ALL WIRING, TERMINAL BLOCKS, AND ADDITIONAL EQUIPMENT SUPPLIED BY THE CONTRACTOR SHALL BE OF THE SAME TYPE AND MANUFACTURER AS CURRENTLY USED IN REMOTE I/O ENCLOSURE 35424.
5. ALL NEW EQUIPMENT SUPPLIED BY THE CONTRACTOR, AND USED FOR THE MODIFICATION OF REMOTE I/O ENCLOSURE 35424, SHALL BE APPROVED BY THE NASA CONTRACTING OFFICER BEFORE USE.
6. REFERENCE SHEET I-029 FOR CABLE ROUTING DETAILS BETWEEN REMOTE I/O ENCLOSURE 35424 AND FIELD DEVICES.

EXECUTION:

7. CONTRACTOR SHALL PROVIDE DETAILED DRAWINGS OF MODIFIED ENCLOSURES, DEVICE TERMINATIONS, AND WIRING.
8. NASA SHALL PROVIDE DRAWINGS OF EXISTING ENCLOSURE 35424 AFTER THE CONTRACT HAS BEEN AWARDED.
9. THE CONTRACTOR SHALL DETERMINE IF THE EXISTING REMOTE I/O ENCLOSURE 35424 SHALL BE MODIFIED IN THE FIELD OR REMOVED FROM THE SITE TO BE MODIFIED AT THE CONTRACTORS FABRICATION SHOP. FIELD MODIFICATION OR REMOVAL SHALL BE APPROVED BY THE NASA CONTRACTING OFFICER.

ENCLOSURE CONNECTORS:

10. CONNECTORS J1 THROUGH J10, J11 THROUGH J23, J24, J26, J28, J30, J33, AND J34 SHALL REMAIN AS IS AND DO NOT REQUIRE DEMOLITION OR MODIFICATION.
11. CONTRACTOR SHALL SUPPLY AND INSTALL NEW CONNECTOR J40. THIS CONNECTOR IS OF THE TYPE MS3454LS28-3S. THIS CONNECTOR IS A JAM NUT RECEPTACLE.
12. ALL CONNECTORS REQUIRE SAFETY WIRE IN ACCORDANCE WITH AIA/NAS NASM33540. SAFETY WIRE MATERIAL SHALL BE PER AIA/NAS NASM20995 TYPE C (SST).
13. CONNECTOR J40 SHALL BE USED TO SUPPLY ENCLOSURE 37568 WITH UNREGULATED 110VAC. 110VAC SUPPLY SHALL COME FROM 35424 TB12 BUS T112. THE 110VAC INTERCONNECTION CABLE BETWEEN 35424 AND 37568 SHALL BE A MINIMUM OF 8 AWG.
14. THE CONTRACTOR SHALL INSTALL AND POT ALL CONNECTORS IN ACCORDANCE WITH MIL-DTL-38999 AND KSC-STD-132.
15. THE CONTRACTOR SHALL SUPPLY AND INSTALL DUST-CAPS FOR ALL SPARE AND UNUSED CONNECTORS.
16. REFERENCE CONNECTOR ALLOCATION TABLE ON SHEET I-024 FOR CONNECTOR DETAILS.
17. CONTRACTOR SHALL SUPPLY AND INSTALL NEW CONNECTORS J35 THROUGH J38. THESE CONNECTORS ARE OF TYPE MS3454LS16-10S. THESE CONNECTORS ARE JAM NUT RECEPTACLES.

PLC MODULES:

18. THERE ARE NO PLC MODULE CHANGES REQUIRED FOR REMOTE I/O ENCLOSURE 35424.

ENCLOSURE WIRING:

19. ALL WIRING FROM ENCLOSURE INTERFACE CONNECTORS SHALL BE LANDED ON THE FIELD INTERFACE TERMINAL BLOCKS BEFORE TERMINATING TO THE PLC OR OTHER INTERNAL ENCLOSURE DEVICES.
20. CONTRACTOR SHALL USE SHEETS I-023 THROUGH I-029 AND I-075 THROUGH I-101 TO VERIFY AND/OR MODIFY:
    - ALL 28VDC DISTRIBUTION WIRING.
    - ALL UNREGULATED 110VAC DISTRIBUTION WIRING.
    - WIRING BETWEEN PLC AND FIELD INTERFACE TERMINAL BLOCKS.
    - ALL WIRING BETWEEN ENCLOSURE CONNECTORS AND FIELD INTERFACE TERMINAL BLOCKS.
21. CONTRACTOR SHALL SUPPLY AND INSTALL ANY ADDITIONAL FIELD INTERFACE TERMINAL BLOCKS REQUIRED TO TERMINATE ALL SIGNALS AND WIRING BETWEEN PLC'S AND ENCLOSURE INTERFACE CONNECTORS.
22. CONTRACTOR SHALL SUPPLY AND INSTALL ANY ADDITIONAL POWER TERMINAL BLOCKS REQUIRED TO CONNECT THE 28VDC SUPPLY TO THE PLC'S, FIELD INTERFACE TERMINAL BLOCKS, AND/OR ENCLOSURE INTERFACE CONNECTORS.
23. CONTRACTOR SHALL SUPPLY AND INSTALL ANY ADDITIONAL ENCLOSURE WIRING REQUIRED TO CONNECT ALL SIGNALS BETWEEN PLC'S AND ENCLOSURE INTERFACE CONNECTORS.
24. CONTRACTOR SHALL MODIFY EXISTING UNREGULATED 110VAC POWER DISTRIBUTION TO SUPPLY INTERFACE TERMINAL BLOCKS AND/OR ENCLOSURE INTERFACE CONNECTORS SPECIFIED IN TABLE ON SHEETS I-024 THROUGH I-028.

SYM	ZONE	DESCRIPTION	DATE	APPROVED
REVISIONS				

JACOBS
Jacobs Technology Inc.

SIGNATURES		DATE
DRAWN	M. HENNIGH	3/07/14
CHECKED	J. WHITEFORD	3/07/14
SUBMITTED	S. RITTER	3/07/14
ST OF LICENSURE: TN LICENSE NO: 00110556		
APPROVED	G. WARD	3/07/14
	S. HUNT	3/07/14

NATIONAL AERONAUTICS AND SPACE ADMINISTRATION
JOHN F. KENNEDY SPACE CENTER, NASA
KENNEDY SPACE CENTER, FLORIDA

KSC LAUNCH PAD 39-B
ENVIRONMENTAL CONTROL SYSTEM (ECS) REFURBISHMENT
INSTRUMENTATION
ECS LP SYSTEM A1/B1 CHASSIS 35424
DEMOLITION & MODIFICATION SHEET 1

I-023

FILE NO.	SIZE	DWG.NO.	REV
	F	79K39602	
PCN. NO. 98898		SHEET 106 OF 187	

1 ECS RIO CABINET 35424 CONNECTOR ALLOCATION TABLE

ENCLOSURE CONNECTOR	ENCLOSURE CONNECTOR TYPE (JAMNUT RECEPTACLE)	MATING CONNECTOR (PLUG)	DESCRIPTION	DISPOSITION
J1	ADBJ79-E1-UBJ20	PL75	CONTROLNET IN PLC B1 CHA	NO MODIFICATION
J2	ADBJ79-E1-UBJ20	PL75	CONTROLNET IN PLC B1 CHB	NO MODIFICATION
J3	ADBJ79-E1-UBJ20	PL75	CONTROLNET IN PLC A1 CHB	NO MODIFICATION
J4	ADBJ79-E1-UBJ20	PL75	CONTROLNET IN PLC A1 CHA	NO MODIFICATION
J5	ADBJ79-E1-UBJ20	PL75	CONTROLNET IN PLC A1 CHA	NO MODIFICATION
J6	ADBJ79-E1-UBJ20	PL75	CONTROLNET IN PLC A1 CHB	NO MODIFICATION
J7	ADBJ79-E1-UBJ20	PL75	CONTROLNET IN PLC B1 CHA	NO MODIFICATION
J8	ADBJ79-E1-UBJ20	PL75	CONTROLNET IN PLC B1 CHB	NO MODIFICATION
J9	MS3454LS32-1P	MS3456LS32-1S	28VDC POWER INPUT SYSTEM A	NO MODIFICATION
J10	MS3454LS32-1P	MS3456LS32-1S	28VDC POWER INPUT SYSTEM B	NO MODIFICATION
J11	MS3454LS28-3P	MS3456LS28-3S	UNREGULATED 110VAC POWER INPUT SYSTEM B	NO MODIFICATION
J12	MS3454LS28-3P	MS3456LS28-3S	UNREGULATED 110VAC POWER INPUT SYSTEM A	NO MODIFICATION
J13	D38999 / 24SE6SN	D38999 / 26SE6PN	SPARE	PROVIDE AND INSTALL DUST CAP
J14	D38999 / 24SE6SN	D38999 / 26SE6PN	SPARE	PROVIDE AND INSTALL DUST CAP
J15	D38999 / 24SE6SN	D38999 / 26SE6PN	SPARE	PROVIDE AND INSTALL DUST CAP
J16	D38999 / 24SE6SN	D38999 / 26SE6PN	SPARE	PROVIDE AND INSTALL DUST CAP
J17	D38999 / 24SE6SN	D38999 / 26SE6PN	SPARE	PROVIDE AND INSTALL DUST CAP
J18	D38999 / 24SE6SN	D38999 / 26SE6PN	SPARE	PROVIDE AND INSTALL DUST CAP
J19	D38999 / 24SE6SN	D38999 / 26SE6PN	SPARE	PROVIDE AND INSTALL DUST CAP
J20	D38999 / 24SE6SN	D38999 / 26SE6PN	CONNECTOR REUSED FOR MOV-008	MODIFY / VERIFY WIRING BACK TO FIELD INTERFACE TERMINAL BLOCKS
J21	D38999 / 24SE6SN	D38999 / 26SE6PN	CONNECTOR REUSED FOR MOV-011	MODIFY / VERIFY WIRING BACK TO FIELD INTERFACE TERMINAL BLOCKS
J22	D38999 / 24SE6SN	D38999 / 26SE6PN	CONNECTOR REUSED FOR MOV-012	MODIFY / VERIFY WIRING BACK TO FIELD INTERFACE TERMINAL BLOCKS
J23	D38999 / 24SE6SN	D38999 / 26SE6PN	CONNECTOR REUSED FOR MOV-013	MODIFY / VERIFY WIRING BACK TO FIELD INTERFACE TERMINAL BLOCKS
J24	D38999 / 24SE8SN	D38999 / 26SE8PN	CONNECTOR REUSED FOR NBO-601	MODIFY / VERIFY WIRING BACK TO FIELD INTERFACE TERMINAL BLOCKS
J26	D38999 / 24SE8SN	D38999 / 26SE8PN	CONNECTOR REUSED FOR CHILLER 1	MODIFY / VERIFY WIRING BACK TO FIELD INTERFACE TERMINAL BLOCKS
J28	D38999 / 24SE8SN	D38999 / 26SE8PN	CONNECTOR REUSED FOR SBO-602	MODIFY / VERIFY WIRING BACK TO FIELD INTERFACE TERMINAL BLOCKS
J30	D38999 / 24SE8SN	D38999 / 26SE8PN	CONNECTOR REUSED FOR CHILLER 2	MODIFY / VERIFY WIRING BACK TO FIELD INTERFACE TERMINAL BLOCKS
J33	D38999 / 24SE8SN	D38999 / 26SE8PN	CONNECTOR REUSED FOR CHILLER 3	MODIFY / VERIFY WIRING BACK TO FIELD INTERFACE TERMINAL BLOCKS
J34	D38999 / 24SE6SN	D38999 / 26SE6PN	SPARE	PROVIDE AND INSTALL DUST CAP
J35	MS3454LS16-10S	MS3456LS16-10P	CONNECTOR USED FOR MOV-008 POWER	PROVIDE AND INSTALL NEW CONNECTOR, WIRING, AND TERMINAL BLOCKS
J36	MS3454LS16-10S	MS3456LS16-10P	CONNECTOR USED FOR MOV-011 POWER	PROVIDE AND INSTALL NEW CONNECTOR, WIRING, AND TERMINAL BLOCKS
J37	MS3454LS16-10S	MS3456LS16-10P	CONNECTOR USED FOR MOV-012 POWER	PROVIDE AND INSTALL NEW CONNECTOR, WIRING, AND TERMINAL BLOCKS
J38	MS3454LS16-10S	MS3456LS16-10P	CONNECTOR USED FOR MOV-013 POWER	PROVIDE AND INSTALL NEW CONNECTOR, WIRING, AND TERMINAL BLOCKS
J40	MS3454LS28-3S	MS3456LS28-3P	UNREGULATED 110VAC POWER OUTPUT TO 37568	PROVIDE AND INSTALL NEW CONNECTOR, WIRING, AND TERMINAL BLOCKS

2 RIO CABINET 35424 DC DEVICE POWER SCHEDULE

POWER SYSTEM FEED (A OR B)	MAIN DC POWER BUS	CABINET TB DESIGNATION	SECONDARY DC POWER BUS	CABINET TB DESIGNATION	CABINET INTERFACE CONNECTOR	DEVICE POWERED	REF. SHEET
GSP SYSTEM A	INSTRUMENT POWER BUS +D120	TB-6 (1 THRU 5)	D130A	TB6-6			
			D130B	TB6-7			
			D130C	TB6-8			
			D130D	TB6-9			
			D130E	TB6-10			
			D130F	TB6-11			
			D130G	TB6-12			
			D130H	TB6-13			
	CONTROL POWER BUS +D121	TB-7 (1 THRU 5)	D131A	TB7-6			
			D131B	TB7-7			
			D131C	TB7-8			
			D131D	TB7-9			
			D131E	TB7-10			
			D131F	TB7-11			
			D131G	TB7-12			
			D131H	TB7-13			
GSP SYSTEM B	INSTRUMENT POWER BUS +D220	TB-8 (1 THRU 5)	D230A	TB8-6			
			D230B	TB8-7			
			D230C	TB8-8			
			D230D	TB8-9			
			D230E	TB8-10			
			D230F	TB8-11			
			D230G	TB8-12			
			D230H	TB8-13			
	CONTROL POWER BUS +D221	TB-9 (1 THRU 5)	D231A	TB9-6			
			D231B	TB9-7			
			D231C	TB9-8			
			D231D	TB9-9			
			D231E	TB9-10			
			D231F	TB9-11			
			D231G	TB9-12			
			D231H	TB9-13			

3 RIO CABINET 35424 UNREGULATED AC DEVICE POWER SCHEDULE

MAIN AC POWER BUS	CABINET TB DESIGNATION	CIRCUIT BREAKER	SECONDARY DC POWER BUS	CABINET TB DESIGNATION	CABINET INTERFACE CONNECTOR	DEVICE SERVICED	REF. SHEET
T211 MCC-D AND MCC-B (SYSTEM B AND SYSTEM A) SWITCHED FROM 35427	TB-12 (1 THRU 2)	CB-9	T211A	TB12-3	35424 - J20	MOV-008	I-076
		CB-10	T211B	TB12-4			
		CB-11	T211C	TB12-5			
		CB-12	T211D	TB12-6			
		CB-13	T211E	TB12-7	35424-J24	NBO-601	I-082
		CB-14	T211F	TB12-8	35424 - J21	MOV-011	I-076
		CB-15	T211G	TB12-9	35424 - J23	MOV-013	I-076
		CB-16	T211H	TB12-10	35424 - J22	MOV-012	I-076
		CB-17	T211J	TB12-11			
		CB-18	T211K	TB12-12			
		CB-19	T211L	TB12-13			
		CB-20	T211M	TB12-14	35424 - J28	SBO-602	I-082

DEMO & MODIFICATION NOTES:

GENERAL:

1. THE CONNECTOR ALLOCATION TABLE DETAILS CONNECTOR TYPES AND EQUIPMENT INTERCONNECTIONS.
2. THIS 28VDC DISTRIBUTION TABLE DETAILS ALL DEVICES, CONNECTIONS TO REMOTE I/O ENCLOSURE 35424, WHICH REQUIRE 28VDC SOURCE POWER.
3. THIS UNREGULATED 110VAC DISTRIBUTION TABLE DETAILS ALL DEVICES, CONNECTED TO REMOTE I/O ENCLOSURE 35424 WHICH REQUIRE UNREGULATED 110VAC POWER.

SYM	ZONE	DESCRIPTION	DATE	APPROVED
REVISIONS				

JACOBS
Jacobs Technology Inc.

SIGNATURES		DATE
DRAWN	M. HENNIGH	3/07/14
CHECKED	J. WHITEFORD	3/07/14
SUBMITTED	S. RITTER	3/07/14
ST OF LICENSURE: TN LICENSE NO: 00110556		
APPROVED	G. WARD	3/07/14
	S. HUNT	3/07/14

NATIONAL AERONAUTICS AND SPACE ADMINISTRATION
JOHN F. KENNEDY SPACE CENTER, NASA
KENNEDY SPACE CENTER, FLORIDA

KSC LAUNCH PAD 39-B
ENVIRONMENTAL CONTROL SYSTEM (ECS) REFURBISHMENT
INSTRUMENTATION
ECS LP SYSTEM A1/B1 CHASSIS 35424
DEMOLITION & MODIFICATION SHEET 2

I-024

FILE NO. | SIZE F | DWG.NO. 79K39602 | REV
PCN. NO. 98898 | SHEET 107 OF 187

ECS RIO CABINET 35424 SYSTEM A1

IDENT	TAG NAME	I/O TYPE	DESCRIPTION	RACK	SLOT	CH	DEVICE TAG	ENCLOSURE INTERFACE CONNECTOR	DEVICE REFERENCE SCHEMATIC	POWER SOURCE/BUS	POWER RETURN/ NEUTRAL	POWER REFERENCE SCHEMATIC	SIGNAL TYPE	SENSOR RANGE	UNITS
1756-IF6I ISOLATED ANALOG VOLTAGE/CURRENT INPUT MODULE															
35424A-AI-1	35424_GSP_SYSA_SUP_V	AI	35424 GSP BUS A VDC (SUPPLY VOLTAGE = SIGNAL x 4)	A1	1	0	R2	N/A	I-093	N/A	TB3 D1R	I-093	0 - 10 VDC	0 - 10	VDC
35424A-AI-2		AI		A1	1	1									
35424A-AI-3		AI		A1	1	2									
35424A-AI-4		AI		A1	1	3									
35424A-AI-5		AI		A1	1	4									
35424A-AI-6		AI		A1	1	5									
1756-IB16D DC (10-30V) ISOLATED INPUT MODULE															
35424A-DI-1	35424_D120_ON_IND	DI	35424 - D120 INSTRUMENT BUS POWER ON INDICATION	A1	2	0	TB6 +D120	N/A	I-093	TB6 +D120	TB3 D1R	I-093	10 -30 VDC	PWR ON/ PWR OFF	-
35424A-DI-2	35424_D121_ON_IND	DI	35424 - D121 INSTRUMENT BUS POWER ON INDICATION	A1	2	1	TB7 +D121	N/A	I-093	TB7 +D121	TB3 D1R	I-093	10 -30 VDC	PWR ON/ PWR OFF	-
35424A-DI-3		DI		A1	2	2									
35424A-DI-4		DI		A1	2	3									
35424A-DI-5		DI		A1	2	4									
35424A-DI-6		DI		A1	2	5									
35424A-DI-7		DI		A1	2	6									
35424A-DI-8		DI		A1	2	7									
35424A-DI-9		DI		A1	2	8									
35424A-DI-10		DI		A1	2	9									
35424A-DI-11		DI		A1	2	10									
35424A-DI-12		DI		A1	2	11									
35424A-DI-13		DI		A1	2	12									
35424A-DI-14		DI		A1	2	13									
35424A-DI-15		DI		A1	2	14									
35424A-DI-16		DI		A1	2	15									
1756-OB8EI DC (10-30V) ELECTRONICALLY FUSED ISOLATED OUTPUT MODULE															
35424A-DO-1	35424_D120_ON_CMD	DO	35424 - D120 INSTRUMENT BUS POWER ON COMMAND	A1	3	0	K1	N/A	I-093	TB1 +D110	TB3 D1R	I-093	10 - 30 VDC	PWR ON/ PWR OFF	-
35424A-DO-2	35424_D121_ON_CMD	DO	35424 - D121 COMMAND BUS POWER ON COMMAND	A1	3	1	K2	N/A	I-093	TB1 +D110	TB3 D1R	I-093	10 - 30 VDC	PWR ON/ PWR OFF	-
35424A-DO-3		DO		A1	3	2									
35424A-DO-4		DO		A1	3	3									
35424A-DO-5		DO		A1	3	4									
35424A-DO-6		DO		A1	3	5									
35424A-DO-7		DO		A1	3	6									
35424A-DO-8		DO		A1	3	7									
1756-OB8EI DC (10-30V) ELECTRONICALLY FUSED ISOLATED OUTPUT MODULE															
35424A-DO-9	35424_D130A_ON_CMD	DO	35424 - D130A INSTRUMENT BUS POWER ON COMMAND	A1	4	0	TB6 +D130A	N/A	I-094	TB6 +D120	TB3 D1R	I-094	10 - 30 VDC	PWR ON/ PWR OFF	-
35424A-DO-10	35424_D130B_ON_CMD	DO	35424 - D130B INSTRUMENT BUS POWER ON COMMAND	A1	4	1	TB6 +D130B	N/A	I-094	TB6 +D120	TB3 D1R	I-094	10 - 30 VDC	PWR ON/ PWR OFF	-
35424A-DO-11	35424_D130C_ON_CMD	DO	35424 - D130C INSTRUMENT BUS POWER ON COMMAND	A1	4	2	TB6 +D130C	N/A	I-094	TB6 +D120	TB3 D1R	I-094	10 - 30 VDC	PWR ON/ PWR OFF	-
35424A-DO-12	35424_D130D_ON_CMD	DO	35424 - D130D INSTRUMENT BUS POWER ON COMMAND	A1	4	3	TB6 +D130D	N/A	I-094	TB6 +D120	TB3 D1R	I-094	10 - 30 VDC	PWR ON/ PWR OFF	-
35424A-DO-13	35424_D130E_ON_CMD	DO	35424 - D130E INSTRUMENT BUS POWER ON COMMAND	A1	4	4	TB6 +D130E	N/A	I-094	TB6 +D120	TB3 D1R	I-094	10 - 30 VDC	PWR ON/ PWR OFF	-
35424A-DO-14	35424_D130F_ON_CMD	DO	35424 - D130F INSTRUMENT BUS POWER ON COMMAND	A1	4	5	TB6 +D130F	N/A	I-094	TB6 +D120	TB3 D1R	I-094	10 - 30 VDC	PWR ON/ PWR OFF	-
35424A-DO-15	35424_D130G_ON_CMD	DO	35424 - D130G INSTRUMENT BUS POWER ON COMMAND	A1	4	6	TB6 +D130G	N/A	I-094	TB6 +D120	TB3 D1R	I-094	10 - 30 VDC	PWR ON/ PWR OFF	-
35424A-DO-16	35424_D130H_ON_CMD	DO	35424 - D130H INSTRUMENT BUS POWER ON COMMAND	A1	4	7	TB6 +D130H	N/A	I-094	TB6 +D120	TB3 D1R	I-094	10 - 30 VDC	PWR ON/ PWR OFF	-
1756-OB8EI DC (10-30V) ELECTRONICALLY FUSED ISOLATED OUTPUT MODULE															
35424A-DO-17	35424_D131A_ON_CMD	DO	35424 - D131A COMMAND BUS POWER ON COMMAND	A1	5	0	TB7 +D131A	N/A	I-094	TB7 +D121	TB3 D1R	I-094	10 - 30 VDC	PWR ON/ PWR OFF	-
35424A-DO-18	35424_D131B_ON_CMD	DO	35424 - D131B COMMAND BUS POWER ON COMMAND	A1	5	1	TB7 +D131B	N/A	I-094	TB7 +D121	TB3 D1R	I-094	10 - 30 VDC	PWR ON/ PWR OFF	-
35424A-DO-19	35424_D131C_ON_CMD	DO	35424 - D131C COMMAND BUS POWER ON COMMAND	A1	5	2	TB7 +D131C	N/A	I-094	TB7 +D121	TB3 D1R	I-094	10 - 30 VDC	PWR ON/ PWR OFF	-
35424A-DO-20	35424_D131D_ON_CMD	DO	35424 - D131D COMMAND BUS POWER ON COMMAND	A1	5	3	TB7 +D131D	N/A	I-094	TB7 +D121	TB3 D1R	I-094	10 - 30 VDC	PWR ON/ PWR OFF	-
35424A-DO-21	35424_D131E_ON_CMD	DO	35424 - D131E COMMAND BUS POWER ON COMMAND	A1	5	4	TB7 +D131E	N/A	I-094	TB7 +D121	TB3 D1R	I-094	10 - 30 VDC	PWR ON/ PWR OFF	-
35424A-DO-22	35424_D131F_ON_CMD	DO	35424 - D131F COMMAND BUS POWER ON COMMAND	A1	5	5	TB7 +D131F	N/A	I-094	TB7 +D121	TB3 D1R	I-094	10 - 30 VDC	PWR ON/ PWR OFF	-
35424A-DO-23	35424_D131G_ON_CMD	DO	35424 - D131G COMMAND BUS POWER ON COMMAND	A1	5	6	TB7 +D131G	N/A	I-094	TB7 +D121	TB3 D1R	I-094	10 - 30 VDC	PWR ON/ PWR OFF	-
35424A-DO-24	35424_D131H_ON_CMD	DO	35424 - D131H COMMAND BUS POWER ON COMMAND	A1	5	7	TB7 +D131H	N/A	I-094	TB7 +D121	TB3 D1R	I-094	10 - 30 VDC	PWR ON/ PWR OFF	-
1756-OX8I AC(10-265V) / DC(5-150V) ISOLATED RELAY MODULE															
35424A-DO-25		DO		A1	9	0									
35424A-DO-26		DO		A1	9	1									
35424A-DO-27		DO		A1	9	2									
35424A-DO-28		DO		A1	9	3									
35424A-DO-29		DO		A1	9	4									
35424A-DO-30		DO		A1	9	5									
35424A-DO-31		DO		A1	9	6									
35424A-DO-32		DO		A1	9	7									
1756-OX8I AC(10-265V) / DC(5-150V) ISOLATED RELAY MODULE															
35424A-DO-33	STBY_NDIS_MOV_011_SEC_SEL_OPN_CMD	DO	STANDBY BLOWER NORTH DISCHARGE VALVE MOV-011 SECONDARY SELECT OPEN COMMAND	A1	10	0	MOV-011	35424 - J21	I-076	N/A	N/A	-	1 N.O./1 N.C.	A1 SELECT / B1 SELECT	-
35424A-DO-34	STBY_NDIS_MOV_011_SEC_SEL_CLS_CMD	DO	STANDBY BLOWER NORTH DISCHARGE VALVE MOV-011 SECONDARY SELECT CLOSE COMMAND	A1	10	1	MOV-011	35424 - J21	I-076	N/A	N/A	-	1 N.O./1 N.C.	A1 SELECT / B1 SELECT	-
35424A-DO-35	STBY_SDIS_MOV_012_SEC_SEL_OPN_CMD	DO	STANDBY BLOWER SOUTH DISCHARGE VALVE MOV-012 SECONDARY SELECT OPEN COMMAND	A1	10	2	MOV-012	35424 - J22	I-076	N/A	N/A	-	1 N.O./1 N.C.	A1 SELECT / B1 SELECT	-
35424A-DO-36	STBY_SDIS_MOV_012_SEC_SEL_CLS_CMD	DO	STANDBY BLOWER SOUTH DISCHARGE VALVE MOV-012 SECONDARY SELECT CLOSE COMMAND	A1	10	3	MOV-012	35424 - J22	I-076	N/A	N/A	-	1 N.O./1 N.C.	A1 SELECT / B1 SELECT	-
35424A-DO-37	CH1_PRI_ON_CMD	DO	CHILLER 1 PRIMARY ON COMMAND	A1	10	4	CH-1	35424 - J26	I-081	N/A	N/A	-	1 N.O	ON/ OFF	-
35424A-DO-38	CH2_PRI_ON_CMD	DO	CHILLER 2 PRIMARY ON COMMAND	A1	10	5	CH-2	35424 - J30	I-081	N/A	N/A	-	1 N.O	ON/ OFF	-
35424A-DO-39	CH3_SEC_ON_CMD	DO	CHILLER 3 SECONDARY ON COMMAND	A1	10	6	CH-3	35424 - J33	I-081	N/A	N/A	-	1 N.O	ON/ OFF	-
35424A-DO-40		DO		A1	10	7									

NOTES:

1. ALL CELLS MARKED TBD SHALL BE DETERMINED BY THE CONTRACTOR AFTER FINAL EQUIPMENT SELECTION.
2. ALL BLANK ROWS ARE SPARE I/O POINTS.
3. REFERENCE SHEET I-029 FOR ENCLOSURE 35424 CONTROLS ONE-LINES.
4. THE CONTRACTOR SHALL MODIFY THE EXISTING KGCS SOFTWARE AND PLC CONFIGURATION FOR USE IN THE CONTRACTOR PROVIDED REDUNDANT PLC SYSTEM IN ACCORDANCE WITH THE TAG INDEX TABLE ON THIS SHEET AND THE SEQUENCE OF OPERATIONS ON SHEETS I-102 THROUGH I-104.

SYM	ZONE	DESCRIPTION	DATE	APPROVED
REVISIONS				

JACOBS
Jacobs Technology Inc.

SIGNATURES		DATE
DRAWN	M. HENNIGH	3/07/14
CHECKED	J. WHITEFORD	3/07/14
SUBMITTED	S. RITTER	3/07/14
ST OF LICENSURE: TN LICENSE NO: 00110556		
APPROVED	G. WARD	3/07/14
	S. HUNT	3/07/14

NATIONAL AERONAUTICS AND SPACE ADMINISTRATION
JOHN F. KENNEDY SPACE CENTER, NASA
KENNEDY SPACE CENTER, FLORIDA

KSC LAUNCH PAD 39-B
ENVIRONMENTAL CONTROL SYSTEM (ECS) REFURBISHMENT
INSTRUMENTATION
ECS LP SYSTEM A1/B1 CHASSIS 35424
TAG INDEX SHEET 1

FILE NO.	SIZE	DWG.NO.	REV
	F	79K39602	
PCN. NO. 98898		SHEET 108 OF 187	

I-025

ECS RIO CABINET 35424 SYSTEM A1 (CONTINUED FROM SHEET I–025)

IDENT	TAG NAME	I/O TYPE	DESCRIPTION	RACK	SLOT	CH	DEVICE TAG	ENCLOSURE INTERFACE CONNECTOR	DEVICE REFERENCE SCHEMATIC	POWER SOURCE/BUS	POWER RETURN/ NEUTRAL	POWER REFERENCE SCHEMATIC	SIGNAL TYPE	SENSOR RANGE	UNITS
1756–IA16 AC (79–132V) INPUT MODULE															
35424A–DI–17	35424_T211_ON_IND	DI	35424 UNREGULAGTED 120VAC BUS T211 ON INDICATION	A1	11	0	TB12 T211	N.A	I–095	TB12 T211	TB13 TN	I–095	79 – 132 VAC	PWR ON/ PWR OFF	–
35424A–DI–18		DI		A1	11	1									
35424A–DI–19		DI		A1	11	2									
35424A–DI–20		DI		A1	11	3									
35424A–DI–21		DI		A1	11	4									
35424A–DI–22		DI		A1	11	5									
35424A–DI–23	CH1_FAIL_IND	DI	CHILLER 1 FAILED INDICATION	A1	11	6	CH–1	35424 – J26	I–081	N/A	N/A	–	79 – 132 VAC	FAILED/ NOT FAILED	–
35424A–DI–24	CH2_FAIL_IND	DI	CHILLER 2 FAILED INDICATION	A1	11	7	CH–2	35424 – J30	I–081	N/A	N/A	–	79 – 132 VAC	FAILED/ NOT FAILED	–
35424A–DI–25		DI		A1	11	8									
35424A–DI–26	CH3_COMP1_ON_IND	DI	CHILLER 3 COMPRESSOR 1 ON INDICATION	A1	11	9	CH–3	35424 – J33	I–081	N/A	N/A	–	79 – 132 VAC	ON/ OFF	–
35424A–DI–27	CH3_COMP2_ON_IND	DI	CHILLER 3 COMPRESSOR 2 ON INDICATION	A1	11	10	CH–3	35424 – J33	I–081	N/A	N/A	–	79 – 132 VAC	ON/ OFF	–
35424A–DI–28	CH3_COMP3_ON_IND	DI	CHILLER 3 COMPRESSOR 3 ON INDICATION	A1	11	11	CH–3	35424 – J33	I–081	N/A	N/A	–	79 – 132 VAC	ON/ OFF	–
35424A–DI–29		DI		A1	11	12									
35424A–DI–30		DI		A1	11	13									
35424A–DI–31	35424_MCCD_120V_ON_IND	DI	35424 MCC–D UNREGULAGTED 120VAC FEED ON INDICATION	A1	11	14	CB7	N/A	I–095	CB7 – 2	K5 – A2	I–095	79 – 132 VAC	PWR ON/ PWR OFF	–
35424A–DI–32	S_STM_BLR_ON_IND	DI	SOUTH STEAM BOILER ON INDICATION	A1	11	15	SBO–602	35424 – J28	I–082	TB12 T211M	TB13 TN	I–095	79 – 132 VAC	ON/ OFF	–
1756–IA16 AC (79–132V) INPUT MODULE															
35424A–DI–33		DI		A1	12	0									
35424A–DI–34		DI		A1	12	1									
35424A–DI–35		DI		A1	12	2									
35424A–DI–36		DI		A1	12	3									
35424A–DI–37		DI		A1	12	4									
35424A–DI–38		DI		A1	12	5									
35424A–DI–39		DI		A1	12	6									
35424A–DI–40		DI		A1	12	7									
35424A–DI–41	NB_DIS_MOV_008_PRI_OPN_IND	DI	NORTH BLOWER DISCHARGE VALVE MOV–008 PRIMARY OPENED INDICATION	A1	12	8	MOV–008	35424 – J20	I–076	TB12 T211A	TB13 TN	I–095	79 – 132 VAC	OPENED/NOT OPEN	–
35424A–DI–42	NB_DIS_MOV_008_PRI_CLS_IND	DI	NORTH BLOWER DISCHARGE VALVE MOV–008 PRIMARY CLOSED INDICATION	A1	12	9	MOV–008	35424 – J20	I–076	TB12 T211A	TB13 TN	I–095	79 – 132 VAC	CLOSED/NOT CLOSED	–
35424A–DI–43	STBY_NDIS_MOV_011_SEC_OPN_IND	DI	STANDBY BLOWER NORTH DISCHARGE VALVE MOV–011 SECONDARY OPENED INDICATION	A1	12	10	MOV–011	35424 – J21	I–076	TB12 T211F	TB13 TN	I–095	79 – 132 VAC	OPENED/NOT OPEN	–
35424A–DI–44	STBY_NDIS_MOV_011_SEC_CLS_IND	DI	STANDBY BLOWER NORTH DISCHARGE VALVE MOV–011 SECONDARY CLOSED INDICATION	A1	12	11	MOV–011	35424 – J21	I–076	TB12 T211F	TB13 TN	I–095	79 – 132 VAC	CLOSED/NOT CLOSED	–
35424A–DI–45	SB_DIS_MOV_013_PRI_OPN_IND	DI	SOUTH BLOWER DISCHARGE VALVE MOV–013 PRIMARY OPENED INDICATION	A1	12	12	MOV–013	35424 – J23	I–076	TB12 T211G	TB13 TN	I–095	79 – 132 VAC	OPENED/NOT OPEN	–
35424A–DI–46	SB_DIS_MOV_013_PRI_CLS_IND	DI	SOUTH BLOWER DISCHARGE VALVE MOV–013 PRIMARY CLOSED INDICATION	A1	12	13	MOV–013	35424 – J23	I–076	TB12 T211G	TB13 TN	I–095	79 – 132 VAC	CLOSED/NOT CLOSED	–
35424A–DI–47	STBY_SDIS_MOV_012_SEC_OPN_IND	DI	STANDBY BLOWER SOUTH DISCHARGE VALVE MOV–012 SECONDARY OPENED INDICATION	A1	12	14	MOV–012	35424 – J22	I–076	TB12 T211H	TB13 TN	I–095	79 – 132 VAC	OPENED/NOT OPEN	–
35424A–DI–48	STBY_SDIS_MOV_012_SEC_CLS_IND	DI	STANDBY BLOWER SOUTH DISCHARGE VALVE MOV–012 SECONDARY CLOSED INDICATION	A1	12	15	MOV–012	35424 – J22	I–076	TB12 T211H	TB13 TN	I–095	79 – 132 VAC	CLOSED/NOT CLOSED	–
1756–OA8E AC (74–132V) ELECTRONICALLY FUSED OUTPUT MODULE															
35424A–DO–41		DO		A1	14	0									
35424A–DO–42		DO		A1	14	1									
35424A–DO–43		DO		A1	14	2									
35424A–DO–44		DO		A1	14	3									
35424A–DO–45		DO		A1	14	4									
35424A–DO–46		DO		A1	14	5									
35424A–DO–47		DO		A1	14	6									
35424A–DO–48	S_STM_BLR_ON_CMD	DO	SOUTH STEAM BOILER ON COMMAND	A1	14	7	SBO–602	35424 – J28	I–082	TB12 T211M	TB13 TN	I–095	79 – 132 VAC	ON/ OFF	–
1756–OA8E AC (74–132V) ELECTRONICALLY FUSED OUTPUT MODULE															
35424A–DO–49		DO		A1	15	0									
35424A–DO–50		DO		A1	15	1									
35424A–DO–51		DO		A1	15	2									
35424A–DO–52		DO		A1	15	3									
35424A–DO–53		DO		A1	15	4									
35424A–DO–54		DO		A1	15	5									
35424A–DO–55		DO		A1	15	6									
35424A–DO–56		DO		A1	15	7									
1756–OA8E AC (74–132V) ELECTRONICALLY FUSED OUTPUT MODULE															
35424A–DO–57	NB_DIS_MOV_008_PRI_OPN_CMD	DO	NORTH BLOWER DISCHARGE VALVE MOV–008 PRIMARY OPEN COMMAND	A1	16	0	MOV–008	35424 – J20	I–076	TB12 T211A	TB13 TN	I–095	79 – 132 VAC	OPEN/DON'T OPEN	–
35424A–DO–58	NB_DIS_MOV_008_PRI_CLS_CMD	DO	NORTH BLOWER DISCHARGE VALVE MOV–008 PRIMARY CLOSE COMMAND	A1	16	1	MOV–008	35424 – J20	I–076	TB12 T211A	TB13 TN	I–095	79 – 132 VAC	CLOSE/DON'T CLOSE	–
35424A–DO–59	STBY_NDIS_MOV_011_SEC_OPN_CMD	DO	STANDBY BLOWER NORTH DISCHARGE VALVE MOV–011 SECONDARY OPEN COMMAND	A1	16	2	MOV–011	35424 – J21	I–076	TB12 T211F	TB13 TN	I–095	79 – 132 VAC	OPENED/NOT OPEN	–
35424A–DO–60	STBY_NDIS_MOV_011_SEC_CLS_CMD	DO	STANDBY BLOWER NORTH DISCHARGE VALVE MOV–011 SECONDARY CLOSE COMMAND	A1	16	3	MOV–011	35424 – J21	I–076	TB12 T211F	TB13 TN	I–095	79 – 132 VAC	CLOSED/NOT CLOSED	–
35424A–DO–61	SB_DIS_MOV_013_PRI_OPN_CMD	DO	SOUTH BLOWER DISCHARGE VALVE MOV–013 PRIMARY OPEN COMMAND	A1	16	4	MOV–013	35424 – J23	I–076	TB12 T211G	TB13 TN	I–095	79 – 132 VAC	OPEN/DON'T OPEN	–
35424A–DO–62	SB_DIS_MOV_013_PRI_CLS_CMD	DO	SOUTH BLOWER DISCHARGE VALVE MOV–013 PRIMARY CLOSE COMMAND	A1	16	5	MOV–013	35424 – J23	I–076	TB12 T211G	TB13 TN	I–095	79 – 132 VAC	CLOSE/DON'T CLOSE	–
35424A–DO–63	STBY_SDIS_MOV_012_SEC_OPN_CMD	DO	STANDBY BLOWER SOUTH DISCHARGE VALVE MOV–012 SECONDARY OPEN COMMAND	A1	16	6	MOV–012	35424 – J22	I–076	TB12 T211H	TB13 TN	I–095	79 – 132 VAC	OPEN/DON'T OPEN	–
35424A–DO–64	STBY_SDIS_MOV_012_SEC_CLS_CMD	DO	STANDBY BLOWER SOUTH DISCHARGE VALVE MOV–012 SECONDARY CLOSE COMMAND	A1	16	7	MOV–012	35424 – J22	I–076	TB12 T211H	TB13 TN	I–095	79 – 132 VAC	CLOSE/DON'T CLOSE	–

NOTES:

1. ALL CELLS MARKED TBD SHALL BE DETERMINED BY THE CONTRACTOR AFTER FINAL EQUIPMENT SELECTION.
2. ALL BLANK ROWS ARE SPARE I/O POINTS.
3. REFERENCE SHEET I–029 FOR ENCLOSURE 35424 CONTROLS ONE–LINES.
4. THE CONTRACTOR SHALL MODIFY THE EXISTING KGCS SOFTWARE AND PLC CONFIGURATION FOR USE IN THE CONTRACTOR PROVIDED REDUNDANT PLC SYSTEM IN ACCORDANCE WITH THE TAG INDEX TABLE ON THIS SHEET AND THE SEQUENCE OF OPERATIONS ON SHEETS I–102 THROUGH I–104.

SYM	ZONE	DESCRIPTION	DATE	APPROVED
REVISIONS				

JACOBS
Jacobs Technology Inc.

SIGNATURES		DATE
DRAWN	M. HENNIGH	3/07/14
CHECKED	J. WHITEFORD	3/07/14
SUBMITTED	S. RITTER	3/07/14
ST OF LICENSURE: TN LICENSE NO: 00110556		
APPROVED	G. WARD	3/07/14
	S. HUNT	3/07/14

NATIONAL AERONAUTICS AND SPACE ADMINISTRATION
JOHN F. KENNEDY SPACE CENTER, NASA
KENNEDY SPACE CENTER, FLORIDA

KSC LAUNCH PAD 39-B
ENVIRONMENTAL CONTROL SYSTEM (ECS) REFURBISHMENT
INSTRUMENTATION
ECS LP SYSTEM A1/B1 CHASSIS 35424
TAG INDEX SHEET 2

FILE NO.	SIZE	DWG.NO.	REV
	F	79K39602	
PCN. NO. 98898		SHEET 109 OF 187	

I–026

ECS RIO CABINET 35424 SYSTEM B1

IDENT	TAG NAME	I/O TYPE	DESCRIPTION	RACK	SLOT	CH	DEVICE TAG	ENCLOSURE INTERFACE CONNECTOR	DEVICE REFERENCE SCHEMATIC	POWER SOURCE/BUS	POWER RETURN/ NEUTRAL	POWER REFERENCE SCHEMATIC	SIGNAL TYPE	SENSOR RANGE	UNITS
1756-IF6I ISOLATED ANALOG VOLTAGE/CURRENT INPUT MODULE															
35424B-AI-1	35424_GSP_SYSB_SUP_V	AI	35424 GSP BUS B VDC (SUPPLY VOLTAGE = SIGNAL x 4)	B1	1	0	R4	N/A	I-093	N/A	TB3 D1R	I-093	0 - 10 VDC	0 - 10	VDC
35424B-AI-2		AI		B1	1	1									
35424B-AI-3		AI		B1	1	2									
35424B-AI-4		AI		B1	1	3									
35424B-AI-5		AI		B1	1	4									
35424B-AI-6		AI		B1	1	5									
1756-IB16D DC (10-30V) ISOLATED INPUT MODULE															
35424B-DI-1	35424_D220_ON_IND	DI	35424 - D220 INSTRUMENT BUS POWER ON INDICATION	B1	2	0	TB8 +D220	N/A	I-093	TB8 +D220	TB3 D1R	I-093	10 -30 VDC	PWR ON/ PWR OFF	-
35424B-DI-2	35424_D221_ON_IND	DI	35424 - D221 INSTRUMENT BUS POWER ON INDICATION	B1	2	1	TB9 +D221	N/A	I-093	TB9 +D221	TB3 D1R	I-093	10 -30 VDC	PWR ON/ PWR OFF	-
35424B-DI-3		DI		B1	2	2									
35424B-DI-4		DI		B1	2	3									
35424B-DI-5		DI		B1	2	4									
35424B-DI-6		DI		B1	2	5									
35424B-DI-7		DI		B1	2	6									
35424B-DI-8		DI		B1	2	7									
35424B-DI-9		DI		B1	2	8									
35424B-DI-10		DI		B1	2	9									
35424B-DI-11		DI		B1	2	10									
35424B-DI-12		DI		B1	2	11									
35424B-DI-13		DI		B1	2	12									
35424B-DI-14		DI		B1	2	13									
35424B-DI-15		DI		B1	2	14									
35424B-DI-16		DI		B1	2	15									
1756-OB8EI DC (10-30V) ELECTRONICALLY FUSED ISOLATED OUTPUT MODULE															
35424B-DO-1	35424_D220_ON_CMD	DO	35424 - D220 INSTRUMENT BUS POWER ON COMMAND	B1	3	0	K3	N/A	I-093	TB2 +D210	TB3 D1R	I-093	10 - 30 VDC	PWR ON/ PWR OFF	-
35424B-DO-2	35424_D221_ON_CMD	DO	35424 - D221 COMMAND BUS POWER ON COMMAND	B1	3	1	K4	N/A	I-093	TB2 +D210	TB3 D1R	I-093	10 - 30 VDC	PWR ON/ PWR OFF	-
35424B-DO-3		DO		B1	3	2									
35424B-DO-4		DO		B1	3	3									
35424B-DO-5		DO		B1	3	4									
35424B-DO-6		DO		B1	3	5									
35424B-DO-7		DO		B1	3	6									
35424B-DO-8		DO		B1	3	7									
1756-OB8EI DC (10-30V) ELECTRONICALLY FUSED ISOLATED OUTPUT MODULE															
35424B-DO-9	35424_D230A_ON_CMD	DO	35424 - D230A INSTRUMENT BUS POWER ON COMMAND	B1	4	0	TB8 +D230A	N/A	I-094	TB8 +D220	TB3 D1R	I-094	10 - 30 VDC	PWR ON/ PWR OFF	-
35424B-DO-10	35424_D230B_ON_CMD	DO	35424 - D230B INSTRUMENT BUS POWER ON COMMAND	B1	4	1	TB8 +D230B	N/A	I-094	TB8 +D220	TB3 D1R	I-094	10 - 30 VDC	PWR ON/ PWR OFF	-
35424B-DO-11	35424_D230C_ON_CMD	DO	35424 - D230C INSTRUMENT BUS POWER ON COMMAND	B1	4	2	TB8 +D230C	N/A	I-094	TB8 +D220	TB3 D1R	I-094	10 - 30 VDC	PWR ON/ PWR OFF	-
35424B-DO-12	35424_D230D_ON_CMD	DO	35424 - D230D INSTRUMENT BUS POWER ON COMMAND	B1	4	3	TB8 +D230D	N/A	I-094	TB8 +D220	TB3 D1R	I-094	10 - 30 VDC	PWR ON/ PWR OFF	-
35424B-DO-13	35424_D230E_ON_CMD	DO	35424 - D230E INSTRUMENT BUS POWER ON COMMAND	B1	4	4	TB8 +D230E	N/A	I-094	TB8 +D220	TB3 D1R	I-094	10 - 30 VDC	PWR ON/ PWR OFF	-
35424B-DO-14	35424_D230F_ON_CMD	DO	35424 - D230F INSTRUMENT BUS POWER ON COMMAND	B1	4	5	TB8 +D230F	N/A	I-094	TB8 +D220	TB3 D1R	I-094	10 - 30 VDC	PWR ON/ PWR OFF	-
35424B-DO-15	35424_D230G_ON_CMD	DO	35424 - D230G INSTRUMENT BUS POWER ON COMMAND	B1	4	6	TB8 +D230G	N/A	I-094	TB8 +D220	TB3 D1R	I-094	10 - 30 VDC	PWR ON/ PWR OFF	-
35424B-DO-16	35424_D230H_ON_CMD	DO	35424 - D230H INSTRUMENT BUS POWER ON COMMAND	B1	4	7	TB8 +D230H	N/A	I-094	TB8 +D220	TB3 D1R	I-094	10 - 30 VDC	PWR ON/ PWR OFF	-
1756-OB8EI DC (10-30V) ELECTRONICALLY FUSED ISOLATED OUTPUT MODULE															
35424B-DO-17	35424_D231A_ON_CMD	DO	35424 - D231A COMMAND BUS POWER ON COMMAND	B1	5	0	TB9 +D231A	N/A	I-094	TB9 +D221	TB3 D1R	I-094	10 - 30 VDC	PWR ON/ PWR OFF	-
35424B-DO-18	35424_D231B_ON_CMD	DO	35424 - D231B COMMAND BUS POWER ON COMMAND	B1	5	1	TB9 +D231B	N/A	I-094	TB9 +D221	TB3 D1R	I-094	10 - 30 VDC	PWR ON/ PWR OFF	-
35424B-DO-19	35424_D231C_ON_CMD	DO	35424 - D231C COMMAND BUS POWER ON COMMAND	B1	5	2	TB9 +D231C	N/A	I-094	TB9 +D221	TB3 D1R	I-094	10 - 30 VDC	PWR ON/ PWR OFF	-
35424B-DO-20	35424_D231D_ON_CMD	DO	35424 - D231D COMMAND BUS POWER ON COMMAND	B1	5	3	TB9 +D231D	N/A	I-094	TB9 +D221	TB3 D1R	I-094	10 - 30 VDC	PWR ON/ PWR OFF	-
35424B-DO-21	35424_D231E_ON_CMD	DO	35424 - D231E COMMAND BUS POWER ON COMMAND	B1	5	4	TB9 +D231E	N/A	I-094	TB9 +D221	TB3 D1R	I-094	10 - 30 VDC	PWR ON/ PWR OFF	-
35424B-DO-22	35424_D231F_ON_CMD	DO	35424 - D231F COMMAND BUS POWER ON COMMAND	B1	5	5	TB9 +D231F	N/A	I-094	TB9 +D221	TB3 D1R	I-094	10 - 30 VDC	PWR ON/ PWR OFF	-
35424B-DO-23	35424_D231G_ON_CMD	DO	35424 - D231G COMMAND BUS POWER ON COMMAND	B1	5	6	TB9 +D231G	N/A	I-094	TB9 +D221	TB3 D1R	I-094	10 - 30 VDC	PWR ON/ PWR OFF	-
35424B-DO-24	35424_D231H_ON_CMD	DO	35424 - D231H COMMAND BUS POWER ON COMMAND	B1	5	7	TB9 +D231H	N/A	I-094	TB9 +D221	TB3 D1R	I-094	10 - 30 VDC	PWR ON/ PWR OFF	-
1756-OX8I AC(10-265V) / DC(5-150V) ISOLATED RELAY MODULE															
35424B-DO-25		DO		B1	9	0									
35424B-DO-26		DO		B1	9	1									
35424B-DO-27		DO		B1	9	2									
35424B-DO-28		DO		B1	9	3									
35424B-DO-29		DO		B1	9	4									
35424B-DO-30		DO		B1	9	5									
35424B-DO-31		DO		B1	9	6									
35424B-DO-32		DO		B1	9	7									
1756-OX8I AC(10-265V) / DC(5-150V) ISOLATED RELAY MODULE															
35424B-DO-33	NB_DIS_MOV_008_SEC_SEL_OPN_CMD	DO	NORTH BLOWER DISCHARGE VALVE MOV-008 SECONDARY SELECT OPEN COMMAND	B1	10	0	MOV-008	35424 - J20	I-076	N/A	N/A	-	1 N.O./1 N.C.	A1 SELECT / B1 SELECT	-
35424B-DO-34	NB_DIS_MOV_008_SEC_SEL_CLS_CMD	DO	NORTH BLOWER DISCHARGE VALVE MOV-008 SECONDARY SELECT CLOSE COMMAND	B1	10	1	MOV-008	35424 - J20	I-076	N/A	N/A	-	1 N.O./1 N.C.	A1 SELECT / B1 SELECT	-
35424B-DO-35	SB_DIS_MOV_013_SEC_SEL_OPN_CMD	DO	SOUTH BLOWER DISCHARGE VALVE MOV-013 SECONDARY SELECT OPEN COMMAND	B1	10	2	MOV-013	35424 - J23	I-076	N/A	N/A	-	1 N.O./1 N.C.	A1 SELECT / B1 SELECT	-
35424B-DO-36	SB_DIS_MOV_013_SEC_SEL_CLS_CMD	DO	SOUTH BLOWER DISCHARGE VALVE MOV-013 SECONDARY SELECT CLOSE COMMAND	B1	10	3	MOV-013	35424 - J23	I-076	N/A	N/A	-	1 N.O./1 N.C.	A1 SELECT / B1 SELECT	-
35424B-DO-37	CH1_SEC_ON_CMD	DO	CHILLER 1 SECONDARY ON COMMAND	B1	10	4	CH-1	35424 - J26	I-081	N/A	N/A	-	1 N.O	ON/ OFF	-
35424B-DO-38	CH2_SEC_ON_CMD	DO	CHILLER 2 SECONDARY ON COMMAND	B1	10	5	CH-2	35424 - J30	I-081	N/A	N/A	-	1 N.O	ON/ OFF	-
35424B-DO-39	CH3_PRI_ON_CMD	DO	CHILLER 3 PRIMARY ON COMMAND	B1	10	6	CH-3	35424 - J33	I-081	N/A	N/A	-	1 N.O	ON/ OFF	-
35424B-DO-40		DO		B1	10	7									

NOTES:

1. ALL CELLS MARKED TBD SHALL BE DETERMINED BY THE CONTRACTOR AFTER FINAL EQUIPMENT SELECTION.
2. ALL BLANK ROWS ARE SPARE I/O POINTS.
3. REFERENCE SHEET I-029 FOR ENCLOSURE 35424 CONTROLS ONE-LINES.
4. THE CONTRACTOR SHALL MODIFY THE EXISTING KCCS SOFTWARE AND PLC CONFIGURATION FOR USE IN THE CONTRACTOR PROVIDED REDUNDANT PLC SYSTEM IN ACCORDANCE WITH THE TAG INDEX TABLE ON THIS SHEET AND THE SEQUENCE OF OPERATIONS ON SHEETS I-102 THROUGH I-104.

SYM	ZONE	DESCRIPTION	DATE	APPROVED
REVISIONS				

JACOBS
Jacobs Technology Inc.

SIGNATURES		DATE
DRAWN	M. HENNIGH	3/07/14
CHECKED	J. WHITEFORD	3/07/14
SUBMITTED	S. RITTER	3/07/14
ST OF LICENSURE: TN LICENSE NO: 00110556		
APPROVED	G. WARD	3/07/14
	S. HUNT	3/07/14

NATIONAL AERONAUTICS AND SPACE ADMINISTRATION
JOHN F. KENNEDY SPACE CENTER, NASA
KENNEDY SPACE CENTER, FLORIDA

KSC LAUNCH PAD 39-B
ENVIRONMENTAL CONTROL SYSTEM (ECS) REFURBISHMENT
INSTRUMENTATION
ECS LP SYSTEM A1/B1 CHASSIS 35424
TAG INDEX SHEET 3

FILE NO.	SIZE	DWG.NO.	REV
	F	79K39602	
PCN. NO. 98898		SHEET 110 OF 187	

I-027

ECS RIO CABINET 35424 SYSTEM B1 (CONTINUED FROM SHEET I-027)

IDENT	TAG NAME	I/O TYPE	DESCRIPTION	RACK	SLOT	CH	DEVICE TAG	ENCLOSURE INTERFACE CONNECTOR	DEVICE REFERENCE SCHEMATIC	POWER SOURCE/BUS	POWER RETURN/ NEUTRAL	POWER REFERENCE SCHEMATIC	SIGNAL TYPE	SENSOR RANGE	UNITS
1756-IA16 AC (79-132V) INPUT MODULE															
35424B-DI-17		DI		B1	11	0									
35424B-DI-18		DI		B1	11	1									
35424B-DI-19		DI		B1	11	2									
35424B-DI-20		DI		B1	11	3									
35424B-DI-21	CH3_FAIL_IND	DI	CHILLER 3 FAILED INDICATION	B1	11	4	CH-3	35424 - J33	I-081	N/A	N/A	-	79 - 132 VAC	FAILED/ NOT FAILED	-
35424B-DI-22		DI		B1	11	5									
35424B-DI-23	CH1_COMP1_ON_IND	DI	CHILLER 1 COMPRESSOR 1 ON INDICATION	B1	11	6	CH-1	35424 - J26	I-081	N/A	N/A	-	79 - 132 VAC	ON/ OFF	-
35424B-DI-24	CH1_COMP2_ON_IND	DI	CHILLER 1 COMPRESSOR 2 ON INDICATION	B1	11	7	CH-1	35424 - J26	I-081	N/A	N/A	-	79 - 132 VAC	ON/ OFF	-
35424B-DI-25	CH1_COMP3_ON_IND	DI	CHILLER 1 COMPRESSOR 3 ON INDICATION	B1	11	8	CH-1	35424 - J26	I-081	N/A	N/A	-	79 - 132 VAC	ON/ OFF	-
35424B-DI-26		DI		B1	11	9									
35424B-DI-27	CH2_COMP1_ON_IND	DI	CHILLER 2 COMPRESSOR 1 ON INDICATION	B1	11	10	CH-2	35424 - J30	I-081	N/A	N/A	-	79 - 132 VAC	ON/ OFF	-
35424B-DI-28	CH2_COMP2_ON_IND	DI	CHILLER 2 COMPRESSOR 2 ON INDICATION	B1	11	11	CH-2	35424 - J30	I-081	N/A	N/A	-	79 - 132 VAC	ON/ OFF	-
35424B-DI-29	CH2_COMP3_ON_IND	DI	CHILLER 2 COMPRESSOR 3 ON INDICATION	B1	11	12	CH-2	35424 - J30	I-081	N/A	N/A	-	79 - 132 VAC	ON/ OFF	-
35424B-DI-30		DI		B1	11	13									
35424B-DI-31	35424_MCCB_120V_ON_IND	DI	35424 MCC-B UNREGULAGTED 120VAC FEED ON INDICATION	B1	11	14	CB8	N.A	I-095	TB11 - 4	TB11 - 6	I-095	79 - 132 VAC	PWR ON/ PWR OFF	-
35424B-DI-32	N_STM_BLR_ON_IND	DI	NORTH STEAM BOILER ON INDICATION	B1	11	15	NBO-601	35424 - J24	I-082	TB12 T211E	TB13 TN	I-095	79 - 132 VAC	ON/ OFF	-
1756-IA16 AC (79-132V) INPUT MODULE															
35424B-DI-33		DI		B1	12	0									
35424B-DI-34		DI		B1	12	1									
35424B-DI-35		DI		B1	12	2									
35424B-DI-36		DI		B1	12	3									
35424B-DI-37		DI		B1	12	4									
35424B-DI-38		DI		B1	12	5									
35424B-DI-39		DI		B1	12	6									
35424B-DI-40		DI		B1	12	7									
35424B-DI-41	NB_DIS_MOV_008_SEC_OPN_IND	DI	NORTH BLOWER DISCHARGE VALVE MOV-008 SECONDARY OPENED INDICATION	B1	12	8	MOV-008	35424 - J20	I-076	TB12 T211A	TB13 TN	I-095	79 - 132 VAC	OPENED/NOT OPEN	-
35424B-DI-42	NB_DIS_MOV_008_SEC_CLS_IND	DI	NORTH BLOWER DISCHARGE VALVE MOV-008 SECONDARY CLOSED INDICATION	B1	12	9	MOV-008	35424 - J20	I-076	TB12 T211A	TB13 TN	I-095	79 - 132 VAC	CLOSED/NOT CLOSED	-
35424B-DI-43	STBY_NDIS_MOV_011_PRI_OPN_IND	DI	STANDBY BLOWER NORTH DISCHARGE VALVE MOV-011 PRIMARY OPENED INDICATION	B1	12	10	MOV-011	35424 - J21	I-076	TB12 T211F	TB13 TN	I-095	79 - 132 VAC	OPENED/NOT OPEN	-
35424B-DI-44	STBY_NDIS_MOV_011_PRI_CLS_IND	DI	STANDBY BLOWER NORTH DISCHARGE VALVE MOV-011 PRIMARY CLOSED INDICATION	B1	12	11	MOV-011	35424 - J21	I-076	TB12 T211F	TB13 TN	I-095	79 - 132 VAC	CLOSED/NOT CLOSED	-
35424B-DI-45	SB_DIS_MOV_013_SEC_OPN_IND	DI	SOUTH BLOWER DISCHARGE VALVE MOV-013 SECONDARY OPENED INDICATION	B1	12	12	MOV-013	35424 - J23	I-076	TB12 T211G	TB13 TN	I-095	79 - 132 VAC	OPENED/NOT OPEN	-
35424B-DI-46	SB_DIS_MOV_013_SEC_CLS_IND	DI	SOUTH BLOWER DISCHARGE VALVE MOV-013 SECONDARY CLOSED INDICATION	B1	12	13	MOV-013	35424 - J23	I-076	TB12 T211G	TB13 TN	I-095	79 - 132 VAC	CLOSED/NOT CLOSED	-
35424B-DI-47	STBY_SDIS_MOV_012_PRI_OPN_IND	DI	STANDBY BLOWER SOUTH DISCHARGE VALVE MOV-012 PRIMARY OPENED INDICATION	B1	12	14	MOV-012	35424 - J22	I-076	TB12 T211H	TB13 TN	I-095	79 - 132 VAC	OPENED/NOT OPEN	-
35424B-DI-48	STBY_SDIS_MOV_012_PRI_CLS_IND	DI	STANDBY BLOWER SOUTH DISCHARGE VALVE MOV-012 PRIMARY CLOSED INDICATION	B1	12	15	MOV-012	35424 - J22	I-076	TB12 T211H	TB13 TN	I-095	79 - 132 VAC	CLOSED/NOT CLOSED	-
1756-OA8E AC (74-132V) ELECTRONICALLY FUSED OUTPUT MODULE															
35424B-DO-41		DO		B1	14	0									
35424B-DO-42		DO		B1	14	1									
35424B-DO-43		DO		B1	14	2									
35424B-DO-44		DO		B1	14	3									
35424B-DO-45		DO		B1	14	4									
35424B-DO-46		DO		B1	14	5									
35424B-DO-47		DO		B1	14	6									
35424B-DO-48	N_STM_BLR_ON_CMD	DO	NORTH STEAM BOILER ON COMMAND	B1	14	7	NBO-601	35424 - J24	I-082	TB12 T211E	TB13 TN	I-095	79 - 132 VAC	ON/ OFF	-
1756-OA8E AC (74-132V) ELECTRONICALLY FUSED OUTPUT MODULE															
35424B-DO-49		DO		B1	15	0									
35424B-DO-50		DO		B1	15	1									
35424B-DO-51		DO		B1	15	2									
35424B-DO-52		DO		B1	15	3									
35424B-DO-53		DO		B1	15	4									
35424B-DO-54		DO		B1	15	5									
35424B-DO-55		DO		B1	15	6									
35424B-DO-56		DO		B1	15	7									
1756-OA8E AC (74-132V) ELECTRONICALLY FUSED OUTPUT MODULE															
35424B-DO-57	NB_DIS_MOV_008_SEC_OPN_CMD	DO	NORTH BLOWER DISCHARGE VALVE MOV-008 SECONDARY OPEN COMMAND	B1	16	0	MOV-008	35424 - J20	I-076	TB12 T211A	TB13 TN	I-095	79 - 132 VAC	OPEN/DON'T OPEN	-
35424B-DO-58	NB_DIS_MOV_008_SEC_CLS_CMD	DO	NORTH BLOWER DISCHARGE VALVE MOV-008 SECONDARY CLOSE COMMAND	B1	16	1	MOV-008	35424 - J20	I-076	TB12 T211A	TB13 TN	I-095	79 - 132 VAC	CLOSE/DON'T CLOSE	-
35424B-DO-59	STBY_NDIS_MOV_011_PRI_OPN_CMD	DO	STANDBY BLOWER NORTH DISCHARGE VALVE MOV-011 PRIMARY OPEN COMMAND	B1	16	2	MOV-011	35424 - J21	I-076	TB12 T211F	TB13 TN	I-095	79 - 132 VAC	OPENED/NOT OPEN	-
35424B-DO-60	STBY_NDIS_MOV_011_PRI_CLS_CMD	DO	STANDBY BLOWER NORTH DISCHARGE VALVE MOV-011 PRIMARY CLOSE COMMAND	B1	16	3	MOV-011	35424 - J21	I-076	TB12 T211F	TB13 TN	I-095	79 - 132 VAC	CLOSED/NOT CLOSED	-
35424B-DO-61	SB_DIS_MOV_013_SEC_OPN_CMD	DO	SOUTH BLOWER DISCHARGE VALVE MOV-013 SECONDARY OPEN COMMAND	B1	16	4	MOV-013	35424 - J23	I-076	TB12 T211G	TB13 TN	I-095	79 - 132 VAC	OPEN/DON'T OPEN	-
35424B-DO-62	SB_DIS_MOV_013_SEC_CLS_CMD	DO	SOUTH BLOWER DISCHARGE VALVE MOV-013 SECONDARY CLOSE COMMAND	B1	16	5	MOV-013	35424 - J23	I-076	TB12 T211G	TB13 TN	I-095	79 - 132 VAC	CLOSE/DON'T CLOSE	-
35424B-DO-63	STBY_SDIS_MOV_012_PRI_OPN_CMD	DO	STANDBY BLOWER SOUTH DISCHARGE VALVE MOV-012 PRIMARY OPEN COMMAND	B1	16	6	MOV-012	35424 - J22	I-076	TB12 T211H	TB13 TN	I-095	79 - 132 VAC	OPENED/NOT OPEN	-
35424B-DO-64	STBY_SDIS_MOV_012_PRI_CLS_CMD	DO	STANDBY BLOWER SOUTH DISCHARGE VALVE MOV-012 PRIMARY CLOSE COMMAND	B1	16	7	MOV-012	35424 - J22	I-076	TB12 T211H	TB13 TN	I-095	79 - 132 VAC	CLOSED/NOT CLOSED	-

NOTES:

1. ALL CELLS MARKED TBD SHALL BE DETERMINED BY THE CONTRACTOR AFTER FINAL EQUIPMENT SELECTION.
2. ALL BLANK ROWS ARE SPARE I/O POINTS.
3. REFERENCE SHEET I-029 FOR ENCLOSURE 35424 CONTROLS ONE-LINES.
4. THE CONTRACTOR SHALL MODIFY THE EXISTING KGCS SOFTWARE AND PLC CONFIGURATION FOR USE IN THE CONTRACTOR PROVIDED REDUNDANT PLC SYSTEM IN ACCORDANCE WITH THE TAG INDEX TABLE ON THIS SHEET AND THE SEQUENCE OF OPERATIONS ON SHEETS I-102 THROUGH I-104.

SYM	ZONE	DESCRIPTION	DATE	APPROVED
		REVISIONS		

JACOBS
Jacobs Technology Inc.

SIGNATURES		DATE
DRAWN	M. HENNIGH	3/07/14
CHECKED	J. WHITEFORD	3/07/14
SUBMITTED	S. RITTER	3/07/14
ST OF LICENSURE: TN LICENSE NO: 00110556		
APPROVED	G. WARD	3/07/14
	S. HUNT	3/07/14

NATIONAL AERONAUTICS AND SPACE ADMINISTRATION
JOHN F. KENNEDY SPACE CENTER, NASA
KENNEDY SPACE CENTER, FLORIDA

KSC LAUNCH PAD 39-B
ENVIRONMENTAL CONTROL SYSTEM (ECS) REFURBISHMENT
INSTRUMENTATION
ECS LP SYSTEM A1/B1 CHASSIS 35424
TAG INDEX SHEET 4

FILE NO.	SIZE	DWG.NO.	REV
	F	79K39602	
PCN. NO. 98898		SHEET 111 OF 187	

I-028

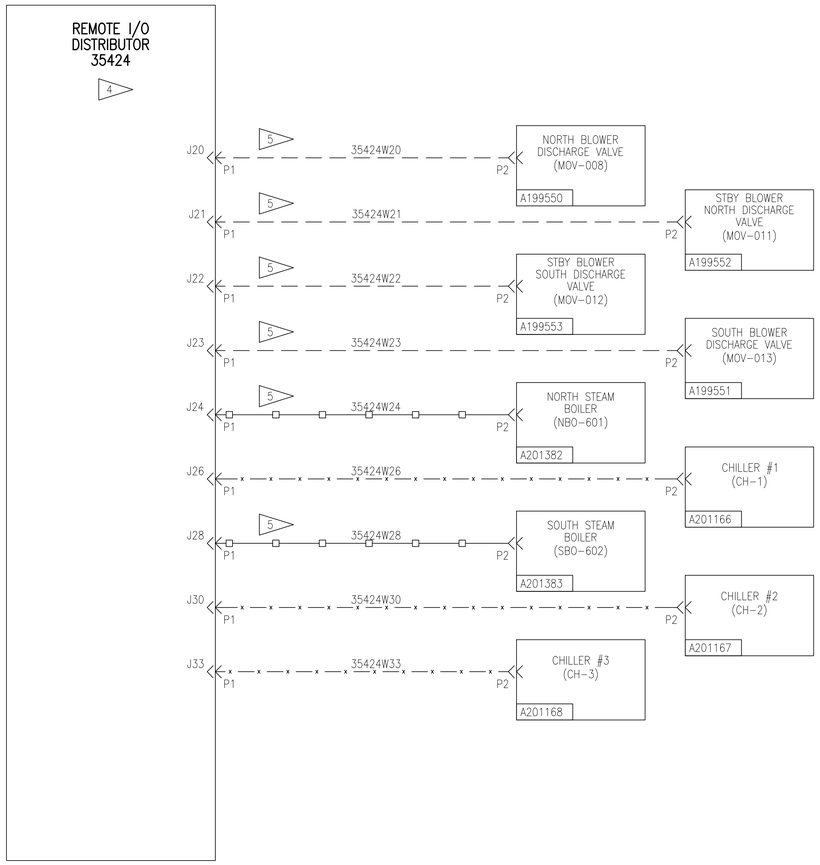

NOTES:

1. THE CONTRACTOR SHALL ADHERE TO THE FOLLOWING SPECIFICATIONS FOR ACCEPTABLE CABLE AND CONNECTOR TYPES, FABRICATION, AND INSTALLATION:
   - KSC-E-165
   - KSC-E-166
   - SSPC SP-1 GUIDELINES
   - NASA-STD-5008 (LATEST VERSION)
   - MIL-DTL-5541
   - 120E3100001 (HEAVY DUTY CABLE SPECIFICATION, GENERAL)
   - 120E3100003 (ELECTRICAL CABLE FABRICATION REQUIREMENTS)
2. THIS ONE-LINE DEPICTS FINAL CONNECTOR AND CABLING ARRANGEMENT AFTER THE REMOTE I/O CONNECTORS AND CABLING HAVE BEEN MODIFIED.
3. REFERENCE SHEETS I-014 AND I-015 FOR 28VDC POWER AND CONTROLNET CONNECTORS AND CABLING DETAILS.

4 UNLESS OTHERWISE NOTED EXISTING REMOTE I/O ENCLOSURE CABLES W11 THROUGH W34 SHALL BE REMOVED. THESE CABLES SHALL BE CAREFULLY COILED AND SAVED. THE CONTRACTOR MAY ELECT TO REUSE THESE CABLES. IN PLACE OF NEW CABLES FOR SIGNALS DESCRIBED IN ANY OF THE ONE-LINES CONTAINED WITHIN THE INSTRUMENTATION DRAWINGS. ALL CABLES THAT THE CONTRACTOR DECIDES TO REUSE MUST BE APPROVED BY THE NASA CONTRACTING OFFICER.

5 EXISTING CABLES SHALL BE REUSED.

6. UNLESS OTHERWISE SPECIFIED ALL CABLING SHOWN ON THIS SHEET SHALL BE NEW. THESE CABLES SHALL BE PROVIDED BY AND INSTALLED BY THE CONTRACTOR.
7. REFERENCE SHEET I-101 FOR ADDITIONAL CABLE SPECIFICATION AND FABRICATION DETAILS.

8 REFERENCE NASA DOCUMENT 120E3100001, "SPECIFICATION FOR HEAVY DUTY GSE CABLE, GENERAL". ALL CABLES USED FOR THE INTERCONNECTION OF ECS EQUIPMENT AND ENCLOSURES SHALL CONFORM TO THESE SPECIFICATIONS.

9 REFERENCE APPENDIX A OF DOCUMENT 120E3100001 FOR INDIVIDUAL CABLE SPECIFICATIONS.

8 9 CABLE SPECIFICATION TABLE

LINE SYMBOL	CABLE SPECIFICATION
—□—□—	120E3100001-001
-//-//-//-//-//-//-	120E3100001-004
— — — — — — —	120E3100001-051
—x—x—x—x—x—	120E3100001-006

SYM	ZONE	DESCRIPTION	DATE	APPROVED
REVISIONS				

JACOBS
Jacobs Technology Inc.

SIGNATURES		DATE
DRAWN	M. HENNIGH	3/07/14
CHECKED	J. WHITEFORD	3/07/14
SUBMITTED	S. RITTER	3/07/14
ST OF LICENSURE: TN LICENSE NO: 00110556		
APPROVED	G. WARD	3/07/14
	S. HUNT	3/07/14

NATIONAL AERONAUTICS AND SPACE ADMINISTRATION
JOHN F. KENNEDY SPACE CENTER, NASA
KENNEDY SPACE CENTER, FLORIDA

KSC LAUNCH PAD 39-B
ENVIRONMENTAL CONTROL SYSTEM (ECS) REFURBISHMENT
INSTRUMENTATION
ECS LP SYSTEM A1/B1 CHASSIS 35424
CONTROLS ONE-LINE

FILE NO.	SIZE	DWG.NO.	REV
	F	79K39602	

PCN. NO. 98898 SHEET 112 OF 187

I-029

P:\95452\DRAWINGS\INSTMT\I-029.DWG 10-DEC-2013 16:24 HARDYDR

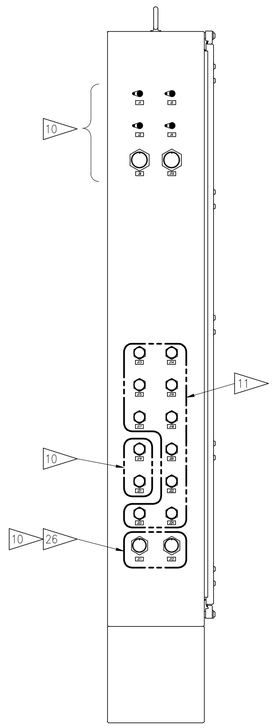

LEFT SIDE VIEW

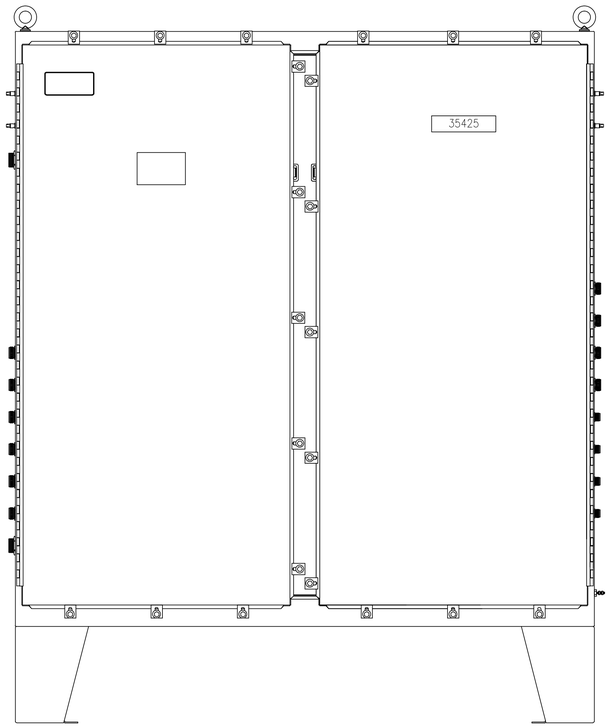

FRONT VIEW

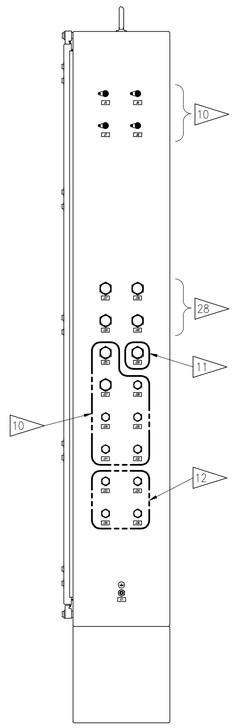

RIGHT SIDE VIEW

DETAIL 1
CONNECTOR MODIFICATIONS 15

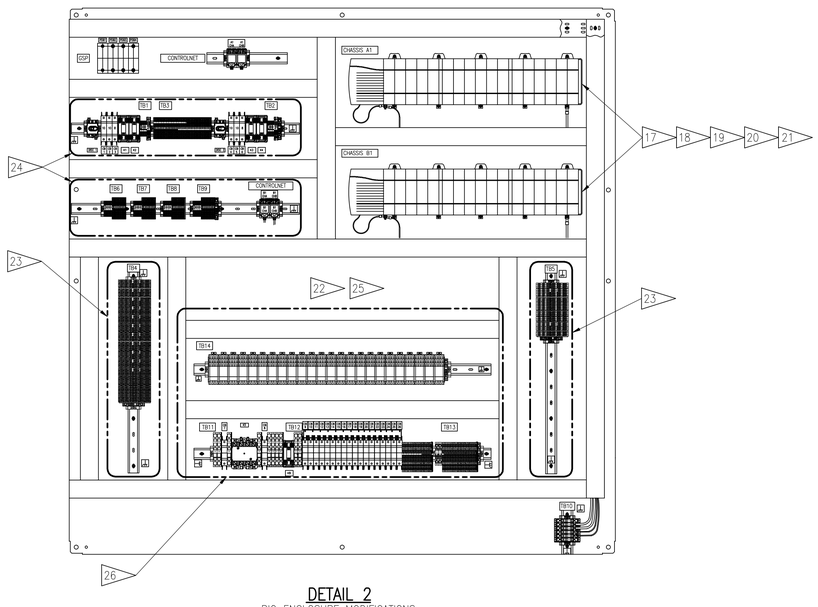

DETAIL 2
RIO ENCLOSURE MODIFICATIONS

DEMO & MODIFICATIONS NOTES:

GENERAL:

1. THIS SHEET DETAILS ALL OF THE CONNECTORS AND EQUIPMENT MODIFICATIONS REQUIRED FOR REMOTE I/O ENCLOSURE 35425.
2. CONTRACTOR SHALL BE RESPONSIBLE FOR ALL DEMOLITION, MODIFICATION, AND NEW EQUIPMENT INSTALLATION DETAILED ON SHEETS I-030 THROUGH I-036 FOR REMOTE I/O ENCLOSURE 35425.
3. UNLESS OTHERWISE SPECIFIED, FABRICATION/MODIFICATION OF ELECTRICAL GROUND SUPPORT EQUIPMENT SHALL BE IN ACCORDANCE WITH KSC-E-165 AND KSC-E-166.
4. UNLESS OTHERWISE SPECIFIED ALL WIRING, TERMINAL BLOCKS, AND ADDITIONAL EQUIPMENT SUPPLIED BY THE CONTRACTOR SHALL BE OF THE SAME TYPE AND MANUFACTURER AS CURRENTLY USED IN REMOTE I/O ENCLOSURE 35425.
5. ALL NEW EQUIPMENT SUPPLIED BY THE CONTRACTOR, AND USED FOR THE MODIFICATION OF REMOTE I/O ENCLOSURE 35425, SHALL BE APPROVED BY THE NASA CONTRACTING OFFICER BEFORE USE.
6. REFERENCE SHEET I-036 FOR CABLE ROUTING DETAILS BETWEEN REMOTE I/O ENCLOSURE 35425 AND FIELD DEVICES.

EXECUTION:

7. CONTRACTOR SHALL PROVIDE DETAILED DRAWINGS OF MODIFIED ENCLOSURES, DEVICE TERMINATIONS, AND WIRING.
8. NASA SHALL PROVIDE DRAWINGS OF EXISTING ENCLOSURE 35425 AFTER THE CONTRACT HAS BEEN AWARDED.
9. THE CONTRACTOR SHALL DETERMINE IF THE EXISTING REMOTE I/O ENCLOSURE 35425 SHALL BE MODIFIED IN THE FIELD OR REMOVED FROM THE SITE TO BE MODIFIED AT THE CONTRACTORS FABRICATION SHOP. FIELD MODIFICATION OR REMOVAL SHALL BE APPROVED BY THE NASA CONTRACTING OFFICER.

ENCLOSURE CONNECTORS:

10 CONNECTORS J1 THROUGH J12, J19, J21, J25, AND J27 THROUGH J32 SHALL REMAIN AS IS AND DO NOT REQUIRE DEMOLITION OR MODIFICATION.

11 THE CONTRACTOR SHALL DEMO CONNECTORS J13 THROUGH J18, J20, J22, J23, J24, AND J26 AND REPLACE THESE CONNECTORS WITH A JAM-NUT RECEPTACLE OF TYPE D38999/24SE8SN. THE CONTRACTOR SHALL SUPPLY AND INSTALL ALL REPLACEMENT CONNECTORS AND WIRING.

12 THE CONTRACTOR SHALL SUPPLY AND INSTALL CONNECTORS J33 THROUGH J36. THESE JAM-NUT RECEPTACLES ARE OF TYPE D38999/24S82SN. THE CONTRACTOR SHALL SUPPLY AND INSTALL ALL WIRING TO THESE CONNECTORS.

13. ALL CONNECTORS REQUIRE SAFETY WIRE IN ACCORDANCE WITH AIA/NAS NASM33540. SAFETY WIRE MATERIAL SHALL BE PER AIA/NAS NASM20995 TYPE C (SST).
14. THE CONTRACTOR SHALL INSTALL AND POT ALL CONNECTORS IN ACCORDANCE WITH MIL-DTL-38999 AND KSC-STD-132.

15 THE CONTRACTOR SHALL SUPPLY AND INSTALL DUST-CAPS FOR ALL SPARE AND UNUSED CONNECTORS.

16. REFERENCE CONNECTOR ALLOCATION TABLE ON SHEET I-031 FOR CONNECTOR DETAILS.

PLC MODULES:

17 THE CONTRACTOR SHALL DEMO SLOT FILLERS FOR SYSTEMS A1 AND B1 SLOTS 6, 7, AND 8. THE CONTRACTOR SHALL THEN SUPPLY AND INSTALL NEW ALLEN BRADLEY 1756-OX8I ISOLATED RELAY MODULES INTO EACH OF THE 6 SLOTS. THE CONTRACTOR SHALL SUPPLY AND INSTALL THE 1756-TBS6H RTB CARD CONNECTORS FOR EACH OF THE 6 MODULES.

18 THE CONTRACTOR SHALL DEMO THE 1756-OX8I RELAY MODULE FOR SYSTEM A1 AND B1 IN SLOT 9. THE CONTRACTOR SHALL THEN SUPPLY AND INSTALL A NEW ALLEN BRADLEY 1756-IA16 DISCRETE AC INPUT MODULES INTO SLOT 9 FOR SYSTEM A1 AND B1. THE CONTRACTOR SHALL SUPPLY AND INSTALL THE 1756-TBSH RTB CONNECTORS FOR BOTH OF THE SLOT 9 MODULES.

19 THE CONTRACTOR SHALL DEMO THE EXISTING SYSTEM A1 AND B1 MODULES IN SLOTS 10, 11, AND 12. THE CONTRACTOR SHALL THEN SUPPLY AND INSTALL NEW ALLEN BRADLEY 1756-IF6I ANALOG INPUT MODULES INTO EACH OF THE 6 SLOTS. THE CONTRACTOR SHALL SUPPLY AND INSTALL THE 1756-TBSH RTB CARD CONNECTORS FOR EACH OF THE 6 MODULES.

20 THE CONTRACTOR SHALL DEMO THE SYSTEM A1 AND SYSTEM B1 1756-OA8E CARDS IN SLOT 13 AND REPLACE THEM WITH 1756-N2 SLOT FILLERS.

21 THE CONTRACTOR SHALL DEMO THE EXISTING SYSTEM A1 AND B1 MODULES IN SLOTS 14, 15, AND 16. THE CONTRACTOR SHALL THEN SUPPLY AND INSTALL NEW ALLEN BRADLEY 1756-OF8 ANALOG OUTPUT MODULES INTO EACH OF THE 6 SLOTS. THE CONTRACTOR SHALL SUPPLY AND INSTALL THE 1756-TBNH RTB CARD CONNECTORS FOR EACH OF THE 6 MODULES.

ENCLOSURE WIRING:

22 CONTRACTOR SHALL USE SHEETS I-030 THROUGH I-036 AND I-075 THROUGH I-101 TO VERIFY AND/OR MODIFY:

- ALL 28VDC DISTRIBUTION WIRING.
- ALL WIRING BETWEEN PLC AND FIELD INTERFACE TERMINAL BLOCKS.
- ALL WIRING BETWEEN ENCLOSURE CONNECTORS AND FIELD INTERFACE TERMINAL BLOCKS.

23 CONTRACTOR SHALL SUPPLY AND INSTALL ANY ADDITIONAL FIELD INTERFACE TERMINAL BLOCKS REQUIRED TO TERMINATE ALL SIGNALS AND WIRING BETWEEN PLC'S AND ENCLOSURE INTERFACE CONNECTORS.

24 CONTRACTOR SHALL SUPPLY AND INSTALL ANY ADDITIONAL POWER TERMINAL BLOCKS REQUIRED TO CONNECT THE 28VDC SUPPLY TO THE PLC'S, FIELD INTERFACE TERMINAL BLOCKS, AND/OR ENCLOSURE INTERFACE CONNECTORS.

25 CONTRACTOR SHALL SUPPLY AND INSTALL ANY ADDITIONAL ENCLOSURE WIRING REQUIRED TO CONNECT ALL SIGNALS BETWEEN PLC'S AND ENCLOSURE INTERFACE CONNECTORS.

26 CONTRACTOR SHALL REMOVE ALL REGULATED 110VAC EQUIPMENT AND WIRING IN REMOTE I/O ENCLOSURE 35425. THE CONTRACTOR SHALL THEN RELOCATE ALL REGULATED 110VAC EQUIPMENT AND WIRING TO POWER DISTRIBUTION ENCLOSURE 37568. EXISTING CONNECTORS J11 AND J12 SHALL BE ABANDONED IN PLACE, WIRING REMOVED, AND THE CONTRACTOR SHALL SUPPLY AND INSTALL DUST CAPS FOR THESE TWO POWER CONNECTORS.

27. ALL WIRING FROM ENCLOSURE INTERFACE CONNECTORS SHALL BE LANDED ON THE FIELD INTERFACE TERMINAL BLOCKS BEFORE TERMINATING TO THE PLC OR OTHER INTERNAL ENCLOSURE DEVICES.

SPARE DUCT OPTION:

28 FOR SPARE DUCT OPTION, THE CONTRACTOR SHALL SUPPLY AND INSTALL ALL CABLES AND CONNECTORS J37 THROUGH J40. THESE CONNECTORS ARE JAM-NUT RECEPTACLES OF TYPE D38999/24SE8SN. THE CONTRACTOR SHALL SUPPLY AND INSTALL ALL WIRING AND TERMINAL BLOCKS TO CONNECT ALL SIGNALS TO THESE ENCLOSURE INTERFACE CONNECTORS.

SYM	ZONE	DESCRIPTION	DATE	APPROVED
REVISIONS				

JACOBS
Jacobs Technology Inc.

SIGNATURES		DATE
DRAWN	M. HENNIGH	3/07/14
CHECKED	J. WHITEFORD	3/07/14
SUBMITTED	S. RITTER	3/07/14
ST OF LICENSURE: TN LICENSE NO: 00110556		
APPROVED	G. WARD	3/07/14
	S. HUNT	3/07/14

NATIONAL AERONAUTICS AND SPACE ADMINISTRATION
JOHN F. KENNEDY SPACE CENTER, NASA
KENNEDY SPACE CENTER, FLORIDA

KSC LAUNCH PAD 39-B
ENVIRONMENTAL CONTROL SYSTEM (ECS) REFURBISHMENT
INSTRUMENTATION
ECS LP SYSTEM A1/B1 CHASSIS 35425
DEMOLITION & MODIFICATION SHEET 1

I-030

FILE NO.	SIZE	DWG.NO.	REV
	F	79K39602	

PCN. NO. 98898 SHEET 113 OF 187

1 ECS RIO CABINET 35425 CONNECTOR ALLOCATION TABLE

ENCLOSURE CONNECTOR	ENCLOSURE CONNECTOR TYPE (JAMNUT RECEPTACLE)	MATING CONNECTOR (PLUG)	DESCRIPTION	DISPOSITION
J1	ADBJ79-E1-UBJ20	PL75	CONTROLNET IN PLC B1 CHA	NO MODIFICATION
J2	ADBJ79-E1-UBJ20	PL75	CONTROLNET IN PLC B1 CHB	NO MODIFICATION
J3	ADBJ79-E1-UBJ20	PL75	CONTROLNET IN PLC A1 CHB	NO MODIFICATION
J4	ADBJ79-E1-UBJ20	PL75	CONTROLNET IN PLC A1 CHA	NO MODIFICATION
J5	ADBJ79-E1-UBJ20	PL75	CONTROLNET IN PLC A1 CHA	NO MODIFICATION
J6	ADBJ79-E1-UBJ20	PL75	CONTROLNET IN PLC A1 CHB	NO MODIFICATION
J7	ADBJ79-E1-UBJ20	PL75	CONTROLNET IN PLC B1 CHA	NO MODIFICATION
J8	ADBJ79-E1-UBJ20	PL75	CONTROLNET IN PLC B1 CHB	NO MODIFICATION
J9	MS3454LS32-1P	MS3456LS32-1S	28VDC POWER INPUT SYSTEM A	NO MODIFICATION
J10	MS3454LS32-1P	MS3456LS32-1S	28VDC POWER INPUT SYSTEM B	NO MODIFICATION
J11	MS3454LS28-3P	MS3456LS28-3S	CONNECTOR NO LONGER USED SYS B REGULATED 110VAC RELOCATED TO 37568	PROVIDE AND INSTALL DUST CAP INDIVIDUALLY INSULATE AND STOW EXISTING CONNECTOR WIRING.
J12	MS3454LS28-3P	MS3456LS28-3S	CONNECTOR NO LONGER USED SYS A REGULATED 110VAC RELOCATED TO 37568	PROVIDE AND INSTALL DUST CAP INDIVIDUALLY INSULATE AND STOW EXISTING CONNECTOR WIRING.
J13	D38999 / 24SE8SN	D38999 / 26SE8PN	CONNECTOR USED FOR FCV-205	DEMO EXISTING CONNECTOR AND REPLACE WITH D38999 / 24SE8SN. PROVIDE AND INSTALL NEW CONNECTOR, WIRING, AND TERMINAL BLOCKS
J14	D38999 / 24SE8SN	D38999 / 26SE8PN	CONNECTOR USED FOR FCV-215	DEMO EXISTING CONNECTOR AND REPLACE WITH D38999 / 24SE8SN. PROVIDE AND INSTALL NEW CONNECTOR, WIRING, AND TERMINAL BLOCKS
J15	D38999 / 24SE8SN	D38999 / 26SE8PN	CONNECTOR USED FOR FCV-225	DEMO EXISTING CONNECTOR AND REPLACE WITH D38999 / 24SE8SN. PROVIDE AND INSTALL NEW CONNECTOR, WIRING, AND TERMINAL BLOCKS
J16	D38999 / 24SE8SN	D38999 / 26SE8PN	CONNECTOR USED FOR FCV-235	DEMO EXISTING CONNECTOR AND REPLACE WITH D38999 / 24SE8SN. PROVIDE AND INSTALL NEW CONNECTOR, WIRING, AND TERMINAL BLOCKS
J17	D38999 / 24SE8SN	D38999 / 26SE8PN	CONNECTOR USED FOR FCV-255	DEMO EXISTING CONNECTOR AND REPLACE WITH D38999 / 24SE8SN. PROVIDE AND INSTALL NEW CONNECTOR, WIRING, AND TERMINAL BLOCKS
J18	D38999 / 24SE8SN	D38999 / 26SE8PN	CONNECTOR USED FOR FCV-265	DEMO EXISTING CONNECTOR AND REPLACE WITH D38999 / 24SE8SN. PROVIDE AND INSTALL NEW CONNECTOR, WIRING, AND TERMINAL BLOCKS
J19	D38999 / 24SE8SN	D38999 / 26SE8PN	CONNECTOR REUSED FOR FCV-275	MODIFY / VERIFY WIRING BACK TO FIELD INTERFACE TERMINAL BLOCKS
J20	D38999 / 24SE8SN	D38999 / 26SE8PN	CONNECTOR USED FOR FCV-305	DEMO EXISTING CONNECTOR AND REPLACE WITH D38999 / 24SE8SN. PROVIDE AND INSTALL NEW CONNECTOR, WIRING, AND TERMINAL BLOCKS
J21	D38999 / 24SE8SN	D38999 / 26SE8PN	CONNECTOR REUSED FOR FCV-213A	MODIFY / VERIFY WIRING BACK TO FIELD INTERFACE TERMINAL BLOCKS
J22	D38999 / 24SE8SN	D38999 / 26SE8PN	CONNECTOR USED FOR FCV-213B	DEMO EXISTING CONNECTOR AND REPLACE WITH D38999 / 24SE8SN. PROVIDE AND INSTALL NEW CONNECTOR, WIRING, AND TERMINAL BLOCKS
J23	D38999 / 24SE8SN	D38999 / 26SE8PN	CONNECTOR USED FOR FCV-223A	DEMO EXISTING CONNECTOR AND REPLACE WITH D38999 / 24SE8SN. PROVIDE AND INSTALL NEW CONNECTOR, WIRING, AND TERMINAL BLOCKS
J24	D38999 / 24SE8SN	D38999 / 26SE8PN	CONNECTOR USED FOR FCV-223B	DEMO EXISTING CONNECTOR AND REPLACE WITH D38999 / 24SE8SN. PROVIDE AND INSTALL NEW CONNECTOR, WIRING, AND TERMINAL BLOCKS
J25	D38999 / 24SE8SN	D38999 / 26SE8PN	CONNECTOR REUSED FOR FCV-233A	MODIFY / VERIFY WIRING BACK TO FIELD INTERFACE TERMINAL BLOCKS
J26	D38999 / 24SE8SN	D38999 / 26SE8PN	CONNECTOR USED FOR FCV-233B	DEMO EXISTING CONNECTOR AND REPLACE WITH D38999 / 24SE8SN. PROVIDE AND INSTALL NEW CONNECTOR, WIRING, AND TERMINAL BLOCKS
J27	D38999 / 24SE8SN	D38999 / 26SE8PN	SPARE	PROVIDE AND INSTALL DUST CAP
J28	D38999 / 24SB2SN	D38999 / 26SB2PN	SYSTEM B POWER SIGNAL FROM 37568 – TB16 T112	MODIFY / VERIFY WIRING BACK TO FIELD INTERFACE TERMINAL BLOCKS
J29	D38999 / 24SB2SN	D38999 / 26SB2PN	SYSTEM B POWER SIGNAL FROM 37568 – CB8	MODIFY / VERIFY WIRING BACK TO FIELD INTERFACE TERMINAL BLOCKS
J30	D38999 / 24SB2SN	D38999 / 26SB2PN	SYSTEM A & B POWER SIGNAL TO 37568 – K8	MODIFY / VERIFY WIRING BACK TO FIELD INTERFACE TERMINAL BLOCKS
J31	D38999 / 24SB2SN	D38999 / 26SB2PN	SYSTEM A POWER SIGNAL FROM 37568 – TB16 T112	MODIFY / VERIFY WIRING BACK TO FIELD INTERFACE TERMINAL BLOCKS
J32	D38999 / 24SB2SN	D38999 / 26SB2PN	SYSTEM AB POWER SIGNAL FROM 37568 – CB7	MODIFY / VERIFY WIRING BACK TO FIELD INTERFACE TERMINAL BLOCKS
J33	D38999 / 24SB2SN	D38999 / 26SB2PN	CONNECTOR USED FOR FCV-273A	PROVIDE AND INSTALL NEW CONNECTOR, WIRING, AND TERMINAL BLOCKS
J34	D38999 / 24SB2SN	D38999 / 26SB2PN	CONNECTOR USED FOR FCV-273B	PROVIDE AND INSTALL NEW CONNECTOR, WIRING, AND TERMINAL BLOCKS
J35	D38999 / 24SB2SN	D38999 / 26SB2PN	CONNECTOR USED FOR FCV-303A	PROVIDE AND INSTALL NEW CONNECTOR, WIRING, AND TERMINAL BLOCKS
J36	D38999 / 24SB2SN	D38999 / 26SB2PN	CONNECTOR USED FOR FCV-303B	PROVIDE AND INSTALL NEW CONNECTOR, WIRING, AND TERMINAL BLOCKS
J37	D38999 / 24SE8SN	D38999 / 26SE8PN	RESERVED FOR FCV-245 (INSTALL OPTION)	IF OPTION INSTALLED, MODIFY / VERIFY WIRING BACK TO FIELD INTERFACE TERMINAL BLOCKS OTHERWISE PROVIDE AND INSTALL DUST CAP
J38	D38999 / 24SE8SN	D38999 / 26SE8PN	RESERVED FOR FCV-285 (INSTALL OPTION)	IF OPTION INSTALLED, MODIFY / VERIFY WIRING BACK TO FIELD INTERFACE TERMINAL BLOCKS OTHERWISE PROVIDE AND INSTALL DUST CAP
J39	D38999 / 24SE8SN	D38999 / 26SE8PN	RESERVED FOR FCV-295 (INSTALL OPTION)	IF OPTION INSTALLED, MODIFY / VERIFY WIRING BACK TO FIELD INTERFACE TERMINAL BLOCKS OTHERWISE PROVIDE AND INSTALL DUST CAP
J40	D38999 / 24SE8SN	D38999 / 26SE8PN	RESERVED FOR FCV-315 (INSTALL OPTION)	IF OPTION INSTALLED, MODIFY / VERIFY WIRING BACK TO FIELD INTERFACE TERMINAL BLOCKS OTHERWISE PROVIDE AND INSTALL DUST CAP

2 RIO CABINET 35425 DC DEVICE POWER SCHEDULE

POWER SYSTEM FEED (A OR B)	MAIN DC POWER BUS	CABINET TB DESIGNATION	SECONDARY DC POWER BUS	CABINET TB DESIGNATION	CABINET INTERFACE CONNECTOR	DEVICE POWERED	REF. SHEET
GSP SYSTEM A	INSTRUMENT POWER BUS +D120	TB-6 (1 THRU 5)	D130A	TB6-6	35425 – J13 35425 – J35	FCV-205 FCV-303A	I-088 I-079
			D130B	TB6-7	35425 – J14	FCV-215	I-088
			D130C	TB6-8	35425 – J15	FCV-225	I-088
			D130D	TB6-9	35425 – J16	FCV-235	I-088
			D130E	TB6-10	35425 – J20 35425 – J21	FCV-305 FCV-213A	I-088 I-079
			D130F	TB6-11	35425 – J17 35425 – J23	FCV-255 FCV-223A	I-088 I-079
			D130G	TB6-12	35425 – J18 35425 – J25	FCV-265 FCV-233A	I-088 I-079
			D130H	TB6-13	35425 – J19 35425 – J33	FCV-275 FCV-273A	I-088 I-079
	CONTROL POWER BUS +D121	TB-7 (1 THRU 5)	D131A	TB7-6			
			D131B	TB7-7			
			D131C	TB7-8			
			D131D	TB7-9			
			D131E	TB7-10			
			D131F	TB7-11			
			D131G	TB7-12			
			D131H	TB7-13			
GSP SYSTEM B	INSTRUMENT POWER BUS +D220	TB-8 (1 THRU 5)	D230A	TB8-6	35425 – J36 35425 – J37	FCV-303B FCV-245	I-079 I-088
			D230B	TB8-7	35425 – J38	FCV-285	I-088
			D230C	TB8-8	35425 – J39	FCV-295	I-088
			D230D	TB8-9	35425 – J40	FCV-315	I-088
			D230E	TB8-10	35425 – J22	FCV-213B	I-079
			D230F	TB8-11	35425 – J24	FCV-223B	I-079
			D230G	TB8-12	35425 – J26	FCV-233B	I-079
			D230H	TB8-13	35425 – J34	FCV-273B	I-079
	CONTROL POWER BUS +D221	TB-9 (1 THRU 5)	D231A	TB9-6			
			D231B	TB9-7			
			D231C	TB9-8			
			D231D	TB9-9			
			D231E	TB9-10			
			D231F	TB9-11			
			D231G	TB9-12			
			D231H	TB9-13			

DEMO & MODIFICATION NOTES:

GENERAL:

1. THE CONNECTOR ALLOCATION TABLE DETAILS CONNECTOR TYPES AND EQUIPMENT INTERCONNECTIONS.
2. THIS 28VDC DISTRIBUTION TABLE DETAILS ALL DEVICES, CONNECTIONS TO REMOTE I/O ENCLOSURE 35425, WHICH REQUIRE 28VDC SOURCE POWER.

SYM	ZONE	DESCRIPTION	DATE	APPROVED
REVISIONS				

JACOBS
Jacobs Technology Inc.

SIGNATURES		DATE
DRAWN	M. HENNIGH	3/07/14
CHECKED	J. WHITEFORD	3/07/14
SUBMITTED	S. RITTER	3/07/14
ST OF LICENSURE: TN LICENSE NO: 00110556		
APPROVED	G. WARD	3/07/14
	S. HUNT	3/07/14

NATIONAL AERONAUTICS AND SPACE ADMINISTRATION
JOHN F. KENNEDY SPACE CENTER, NASA
KENNEDY SPACE CENTER, FLORIDA

KSC LAUNCH PAD 39-B
ENVIRONMENTAL CONTROL SYSTEM (ECS) REFURBISHMENT
INSTRUMENTATION
ECS LP SYSTEM A1/B1 CHASSIS 35425
DEMOLITION & MODIFICATION SHEET 2

FILE NO.	SIZE	DWG.NO.	REV
	F	79K39602	

PCN. NO. 98898 SHEET 114 OF 187

I-031

ECS RIO CABINET 35425 SYSTEM A1

IDENT	TAG NAME	I/O TYPE	DESCRIPTION	RACK	SLOT	CH	DEVICE TAG	ENCLOSURE INTERFACE CONNECTOR	DEVICE REFERENCE SCHEMATIC	POWER SOURCE/BUS	POWER RETURN/ NEUTRAL	POWER REFERENCE SCHEMATIC	SIGNAL TYPE	SENSOR RANGE	UNITS
1756-IF6I ISOLATED ANALOG VOLTAGE/CURRENT INPUT MODULE															
35425A-AI-1	35425_GSP_SYSA_SUP_V	AI	35425 GSP BUS A VDC (SUPPLY VOLTAGE = SIGNAL x 4)	A1	1	0	R2	N/A	I-093	N/A	TB3 D1R	I-093	0 - 10 VDC	0 - 10	VDC
35425A-AI-2		AI		A1	1	1									
35425A-AI-3		AI		A1	1	2									
35425A-AI-4		AI		A1	1	3									
35425A-AI-5		AI		A1	1	4									
35425A-AI-6		AI		A1	1	5									
1756-IB16D DC (10-30V) ISOLATED INPUT MODULE															
35425A-DI-1	35425_D120_ON_IND	DI	35425 - D120 INSTRUMENT BUS POWER ON INDICATION	A1	2	0	TB6 +D120	N/A	I-093	TB6 +D120	TB3 D1R	I-093	10 -30 VDC	PWR ON/ PWR OFF	-
35425A-DI-2	35425_D121_ON_IND	DI	35425 - D121 INSTRUMENT BUS POWER ON INDICATION	A1	2	1	TB7 +D121	N/A	I-093	TB7 +D121	TB3 D1R	I-093	10 -30 VDC	PWR ON/ PWR OFF	-
35425A-DI-3		DI		A1	2	2									
35425A-DI-4		DI		A1	2	3									
35425A-DI-5		DI		A1	2	4									
35425A-DI-6		DI		A1	2	5									
35425A-DI-7		DI		A1	2	6									
35425A-DI-8		DI		A1	2	7									
35425A-DI-9		DI		A1	2	8									
35425A-DI-10		DI		A1	2	9									
35425A-DI-11		DI		A1	2	10									
35425A-DI-12		DI		A1	2	11									
35425A-DI-13		DI		A1	2	12									
35425A-DI-14		DI		A1	2	13									
35425A-DI-15		DI		A1	2	14									
35425A-DI-16		DI		A1	2	15									
1756-OB8EI DC (10-30V) ELECTRONICALLY FUSED ISOLATED OUTPUT MODULE															
35425A-DO-1	35425_D120_ON_CMD	DO	35425 - D120 INSTRUMENT BUS POWER ON COMMAND	A1	3	0	K1	N/A	I-093	TB1 +D110	TB3 D1R	I-093	10 - 30 VDC	PWR ON/ PWR OFF	-
35425A-DO-2	35425_D121_ON_CMD	DO	35425 - D121 COMMAND BUS POWER ON COMMAND	A1	3	1	K2	N/A	I-093	TB1 +D110	TB3 D1R	I-093	10 - 30 VDC	PWR ON/ PWR OFF	-
35425A-DO-3		DO		A1	3	2									
35425A-DO-4		DO		A1	3	3									
35425A-DO-5		DO		A1	3	4									
35425A-DO-6		DO		A1	3	5									
35425A-DO-7		DO		A1	3	6									
35425A-DO-8		DO		A1	3	7									
1756-OB8EI DC (10-30V) ELECTRONICALLY FUSED ISOLATED OUTPUT MODULE															
35425A-DO-9	35425_D130A_ON_CMD	DO	35425 - D130A INSTRUMENT BUS POWER ON COMMAND	A1	4	0	TB6 +D130A	N/A	I-094	TB6 +D120	TB3 D1R	I-094	10 - 30 VDC	PWR ON/ PWR OFF	-
35425A-DO-10	35425_D130B_ON_CMD	DO	35425 - D130B INSTRUMENT BUS POWER ON COMMAND	A1	4	1	TB6 +D130B	N/A	I-094	TB6 +D120	TB3 D1R	I-094	10 - 30 VDC	PWR ON/ PWR OFF	-
35425A-DO-11	35425_D130C_ON_CMD	DO	35425 - D130C INSTRUMENT BUS POWER ON COMMAND	A1	4	2	TB6 +D130C	N/A	I-094	TB6 +D120	TB3 D1R	I-094	10 - 30 VDC	PWR ON/ PWR OFF	-
35425A-DO-12	35425_D130D_ON_CMD	DO	35425 - D130D INSTRUMENT BUS POWER ON COMMAND	A1	4	3	TB6 +D130D	N/A	I-094	TB6 +D120	TB3 D1R	I-094	10 - 30 VDC	PWR ON/ PWR OFF	-
35425A-DO-13	35425_D130E_ON_CMD	DO	35425 - D130E INSTRUMENT BUS POWER ON COMMAND	A1	4	4	TB6 +D130E	N/A	I-094	TB6 +D120	TB3 D1R	I-094	10 - 30 VDC	PWR ON/ PWR OFF	-
35425A-DO-14	35425_D130F_ON_CMD	DO	35425 - D130F INSTRUMENT BUS POWER ON COMMAND	A1	4	5	TB6 +D130F	N/A	I-094	TB6 +D120	TB3 D1R	I-094	10 - 30 VDC	PWR ON/ PWR OFF	-
35425A-DO-15	35425_D130G_ON_CMD	DO	35425 - D130G INSTRUMENT BUS POWER ON COMMAND	A1	4	6	TB6 +D130G	N/A	I-094	TB6 +D120	TB3 D1R	I-094	10 - 30 VDC	PWR ON/ PWR OFF	-
35425A-DO-16	35425_D130H_ON_CMD	DO	35425 - D130H INSTRUMENT BUS POWER ON COMMAND	A1	4	7	TB6 +D130H	N/A	I-094	TB6 +D120	TB3 D1R	I-094	10 - 30 VDC	PWR ON/ PWR OFF	-
1756-OB8EI DC (10-30V) ELECTRONICALLY FUSED ISOLATED OUTPUT MODULE															
35425A-DO-17	35425_D131A_ON_CMD	DO	35425 - D131A COMMAND BUS POWER ON COMMAND	A1	5	0	TB7 +D131A	N/A	I-094	TB7 +D121	TB3 D1R	I-094	10 - 30 VDC	PWR ON/ PWR OFF	-
35425A-DO-18	35425_D131B_ON_CMD	DO	35425 - D131B COMMAND BUS POWER ON COMMAND	A1	5	1	TB7 +D131B	N/A	I-094	TB7 +D121	TB3 D1R	I-094	10 - 30 VDC	PWR ON/ PWR OFF	-
35425A-DO-19	35425_D131C_ON_CMD	DO	35425 - D131C COMMAND BUS POWER ON COMMAND	A1	5	2	TB7 +D131C	N/A	I-094	TB7 +D121	TB3 D1R	I-094	10 - 30 VDC	PWR ON/ PWR OFF	-
35425A-DO-20	35425_D131D_ON_CMD	DO	35425 - D131D COMMAND BUS POWER ON COMMAND	A1	5	3	TB7 +D131D	N/A	I-094	TB7 +D121	TB3 D1R	I-094	10 - 30 VDC	PWR ON/ PWR OFF	-
35425A-DO-21	35425_D131E_ON_CMD	DO	35425 - D131E COMMAND BUS POWER ON COMMAND	A1	5	4	TB7 +D131E	N/A	I-094	TB7 +D121	TB3 D1R	I-094	10 - 30 VDC	PWR ON/ PWR OFF	-
35425A-DO-22	35425_D131F_ON_CMD	DO	35425 - D131F COMMAND BUS POWER ON COMMAND	A1	5	5	TB7 +D131F	N/A	I-094	TB7 +D121	TB3 D1R	I-094	10 - 30 VDC	PWR ON/ PWR OFF	-
35425A-DO-23	35425_D131G_ON_CMD	DO	35425 - D131G COMMAND BUS POWER ON COMMAND	A1	5	6	TB7 +D131G	N/A	I-094	TB7 +D121	TB3 D1R	I-094	10 - 30 VDC	PWR ON/ PWR OFF	-
35425A-DO-24	35425_D131H_ON_CMD	DO	35425 - D131H COMMAND BUS POWER ON COMMAND	A1	5	7	TB7 +D131H	N/A	I-094	TB7 +D121	TB3 D1R	I-094	10 - 30 VDC	PWR ON/ PWR OFF	-
1756-OX8I AC(10-265V) / DC(5-150V) ISOLATED RELAY MODULE															
35425A-DO-25	CS_FS_FCV215_SEC_SEL_POS_CMD	DO	DUCT CS/FS FLOW CONTROL VALVE FCV-215 SECONDARY POSITIVE COMMAND SELECT	A1	6	0	FCV-215	35425 - J14	I-088	N/A	N/A	-	1 N.C./1 N.O.	B1 SELECT / A1 SELECT	-
35425A-DO-26	CS_FS_FCV215_SEC_SEL_NEG_CMD	DO	DUCT CS/FS FLOW CONTROL VALVE FCV-215 SECONDARY NEGATIVE COMMAND SELECT	A1	6	1	FCV-215	35425 - J14	I-088	N/A	N/A	-	1 N.C./1 N.O.	B1 SELECT / A1 SELECT	-
35425A-DO-27	CS_AFT_FCV235_SEC_SEL_POS_CMD	DO	DUCT CS/AFT FLOW CONTROL VALVE FCV-235 SECONDARY POSITIVE COMMAND SELECT	A1	6	2	FCV-235	35425 - J16	I-088	N/A	N/A	-	1 N.C./1 N.O.	B1 SELECT / A1 SELECT	-
35425A-DO-28	CS_AFT_FCV235_SEC_SEL_NEG_CMD	DO	DUCT CS/AFT FLOW CONTROL VALVE FCV-235 SECONDARY NEGATIVE COMMAND SELECT	A1	6	3	FCV-235	35425 - J16	I-088	N/A	N/A	-	1 N.C./1 N.O.	B1 SELECT / A1 SELECT	-
35425A-DO-29	LAS_FCV255_SEC_SEL_POS_CMD	DO	DUCT LAS FLOW CONTROL VALVE FCV-255 SECONDARY POSITIVE COMMAND SELECT	A1	6	4	FCV-255	35425 - J17	I-088	N/A	N/A	-	1 N.C./1 N.O.	B1 SELECT / A1 SELECT	-
35425A-DO-30	LAS_FCV255_SEC_SEL_NEG_CMD	DO	DUCT LAS FLOW CONTROL VALVE FCV-255 SECONDARY NEGATIVE COMMAND SELECT	A1	6	5	FCV-255	35425 - J17	I-088	N/A	N/A	-	1 N.C./1 N.O.	B1 SELECT / A1 SELECT	-
35425A-DO-31	CS_ENG_FCV275_SEC_SEL_POS_CMD	DO	DUCT CS/ENG FLOW CONTROL VALVE FCV-275 SECONDARY POSITIVE COMMAND SELECT	A1	6	6	FCV-275	35425 - J19	I-088	N/A	N/A	-	1 N.C./1 N.O.	B1 SELECT / A1 SELECT	-
35425A-DO-32	CS_ENG_FCV275_SEC_SEL_NEG_CMD	DO	DUCT CS/ENG FLOW CONTROL VALVE FCV-275 SECONDARY NEGATIVE COMMAND SELECT	A1	6	7	FCV-275	35425 - J19	I-088	N/A	N/A	-	1 N.C./1 N.O.	B1 SELECT / A1 SELECT	-
1756-OX8I AC(10-265V) / DC(5-150V) ISOLATED RELAY MODULE															
† 35425A-DO-33	SPARE3_FCV295_SEC_SEL_POS_CMD	DO	SPARE DUCT 3 FLOW CONTROL VALVE FCV-295 SECONDARY POSITIVE COMMAND SELECT	A1	7	0	FCV-295	35425 - J39	I-088	N/A	N/A	-	1 N.C./1 N.O.	B1 SELECT / A1 SELECT	-
† 35425A-DO-34	SPARE3_FCV295_SEC_SEL_NEG_CMD	DO	SPARE DUCT 3 FLOW CONTROL VALVE FCV-295 SECONDARY NEGATIVE COMMAND SELECT	A1	7	1	FCV-295	35425 - J39	I-088	N/A	N/A	-	1 N.C./1 N.O.	B1 SELECT / A1 SELECT	-
† 35425A-DO-35	SPARE4_FCV315_SEC_SEL_POS_CMD	DO	SPARE DUCT 4 FLOW CONTROL VALVE FCV-315 SECONDARY POSITIVE COMMAND SELECT	A1	7	2	FCV-315	35425 - J40	I-088	N/A	N/A	-	1 N.C./1 N.O.	B1 SELECT / A1 SELECT	-
† 35425A-DO-36	SPARE4_FCV315_SEC_SEL_NEG_CMD	DO	SPARE DUCT 4 FLOW CONTROL VALVE FCV-315 SECONDARY NEGATIVE COMMAND SELECT	A1	7	3	FCV-315	35425 - J40	I-088	N/A	N/A	-	1 N.C./1 N.O.	B1 SELECT / A1 SELECT	-
35425A-DO-37		DO		A1	7	4									
35425A-DO-38		DO		A1	7	5									
35425A-DO-39		DO		A1	7	6									
35425A-DO-40		DO		A1	7	7									

NOTES:

1. ALL CELLS MARKED TBD SHALL BE DETERMINED BY THE CONTRACTOR AFTER FINAL EQUIPMENT SELECTION.
2. ALL BLANK ROWS ARE SPARE I/O POINTS.
3. REFERENCE SHEET I-036 FOR ENCLOSURE 35425 CONTROLS ONE-LINES.
4. THE CONTRACTOR SHALL MODIFY THE EXISTING KGCS SOFTWARE AND PLC CONFIGURATION FOR USE IN THE CONTRACTOR PROVIDED REDUNDANT PLC SYSTEM IN ACCORDANCE WITH THE TAG INDEX TABLE ON THIS SHEET AND THE SEQUENCE OF OPERATIONS ON SHEETS I-102 THROUGH I-104.
5. CHANNEL ASSIGNMENTS FOR SPARE DUCTS ARE FOR INSTALL OPTION. THESE CHANNELS ARE DENOTED BY "†" SYMBOL.

SYM	ZONE	DESCRIPTION	DATE	APPROVED
REVISIONS				

JACOBS
Jacobs Technology Inc.

SIGNATURES		DATE
DRAWN	M. HENNIGH	3/07/14
CHECKED	J. WHITEFORD	3/07/14
SUBMITTED	S. RITTER	3/07/14
ST OF LICENSURE: TN LICENSE NO: 00110556		
APPROVED	G. WARD	3/07/14
	S. HUNT	3/07/14

NATIONAL AERONAUTICS AND SPACE ADMINISTRATION
JOHN F. KENNEDY SPACE CENTER, NASA
KENNEDY SPACE CENTER, FLORIDA

KSC LAUNCH PAD 39-B
ENVIRONMENTAL CONTROL SYSTEM (ECS) REFURBISHMENT
INSTRUMENTATION
ECS LP SYSTEM A1/B1 CHASSIS 35425
TAG INDEX SHEET 1

FILE NO.	SIZE	DWG.NO.	REV
	F	79K39602	
PCN. NO. 98898		SHEET 115 OF 187	

I-032

ECS RIO CABINET 35425 SYSTEM A1 (CONTINUED FROM SHEET I-032)

IDENT	TAG NAME	I/O TYPE	DESCRIPTION	RACK	SLOT	CH	DEVICE TAG	ENCLOSURE INTERFACE CONNECTOR	DEVICE REFERENCE SCHEMATIC	POWER SOURCE/BUS	POWER RETURN/ NEUTRAL	POWER REFERENCE SCHEMATIC	SIGNAL TYPE	SENSOR RANGE	UNITS
1756-OX8I AC(10-265V) / DC(5-150V) ISOLATED RELAY MODULE															
35425A-DO-41		DO		A1	8	0									
35425A-DO-42		DO		A1	8	1									
35425A-DO-43		DO		A1	8	2									
35425A-DO-44		DO		A1	8	3									
35425A-DO-45		DO		A1	8	4									
35425A-DO-46		DO		A1	8	5									
35425A-DO-47		DO		A1	8	6									
35425A-DO-48		DO		A1	8	7									
1756-IA16 AC (79-132V) INPUT MODULE															
35425A-DI-17	37568_T112_ON_IND	DI	37568 REGULATED 120VAC BUS T112 ON INDICATION	A1	9	0	37568 - TB16 T112	35425 - J28	I-096	TB16 - T112	TB17 TN	I-096	79 - 132 VAC	PWR ON/ PWR OFF	-
35425A-DI-18		DI		A1	9	1									
35425A-DI-19		DI		A1	9	2									
35425A-DI-20		DI		A1	9	3									
35425A-DI-21		DI		A1	9	4									
35425A-DI-22		DI		A1	9	5									
35425A-DI-23		DI		A1	9	6									
35425A-DI-24		DI		A1	9	7									
35425A-DI-25		DI		A1	9	8									
35425A-DI-26		DI		A1	9	9									
35425A-DI-27		DI		A1	9	10									
35425A-DI-28		DI		A1	9	11									
35425A-DI-29		DI		A1	9	12									
35425A-DI-30		DI		A1	9	13									
35425A-DI-31		DI		A1	9	14									
35425A-DI-32	37568_MCCA_REG_120V_ON_IND	DI	37568 MCC-A REGULATED 120VAC FEED ON INDICATION	A1	9	15	37568 CB7	35425 - J32	I-096	CB7 - 2	K5 - A2	I-096	79 - 132 VAC	PWR ON/ PWR OFF	-
1756-IF6I ISOLATED ANALOG VOLTAGE/CURRENT INPUT MODULE															
35425A-AI-7	CS_IT_FCV205_PRI_PER_OPN_IND	AI	DUCT CS/IT FLOW CONTROL VALVE FCV-205 PRIMARY PERCENT OPEN INDICATION	A1	10	0	FCV-205	35425 - J13	I-088	TB6 +D130A	TB3 D1R	I-094	4-20 mA	0 - 100	% OPEN
35425A-AI-8	CS_FS_FCV215_SEC_PER_OPN_IND	AI	DUCT CS/FS FLOW CONTROL VALVE FCV-215 SECONDARY PERCENT OPEN INDICATION	A1	10	1	FCV-215	35425 - J14	I-088	TB6 +D130B	TB3 D1R	I-094	4-20 mA	0 - 100	% OPEN
35425A-AI-9	SM_FCV225_PRI_PER_OPN_IND	AI	DUCT SM FLOW CONTROL VALVE FCV-225 PRIMARY PERCENT OPEN INDICATION	A1	10	2	FCV-225	35425 - J15	I-088	TB6 +D130C	TB3 D1R	I-094	4-20 mA	0 - 100	% OPEN
35425A-AI-10	CS_AFT_FCV235_SEC_PER_OPN_IND	AI	DUCT CS/AFT FLOW CONTROL VALVE FCV-235 SECONDARY PERCENT OPEN INDICATION	A1	10	3	FCV-235	35425 - J16	I-088	TB6 +D130D	TB3 D1R	I-094	4-20 mA	0 - 100	% OPEN
† 35425A-AI-11	SPARE1 _PRI_PER_OPN_IND	AI	SPARE DUCT 1 FLOW CONTROL VALVE FCV-245 PRIMARY PERCENT OPEN INDICATION	A1	10	4	FCV-245	35425 - J37	I-088	TB8 +D230A	TB3 D1R	I-094	4-20 mA	0 - 100	% OPEN
35425A-AI-12	LAS_FCV255_SEC_PER_OPN_IND	AI	DUCT LAS FLOW CONTROL VALVE FCV-255 SECONDARY PERCENT OPEN INDICATION	A1	10	5	FCV-255	35425 - J17	I-088	TB6 +D130F	TB3 D1R	I-094	4-20 mA	0 - 100	% OPEN
1756-IF6I ISOLATED ANALOG VOLTAGE/CURRENT INPUT MODULE															
35425A-AI-13	EC_CC_FCV265_PRI_PER_OPN_IND	AI	DUCT EC/CC FLOW CONTROL VALVE FCV-265 PRIMARY PERCENT OPEN INDICATION	A1	11	0	FCV-265	35425 - J18	I-088	TB6 +D130G	TB3 D1R	I-094	4-20 mA	0 - 100	% OPEN
35425A-AI-14	CS_ENG_FCV275_SEC_PER_OPN_IND	AI	DUCT CS/ENG FLOW CONTROL VALVE FCV-275 SECONDARY PERCENT OPEN INDICATION	A1	11	1	FCV-275	35425 - J19	I-088	TB6 +D130H	TB3 D1R	I-094	4-20 mA	0 - 100	% OPEN
† 35425A-AI-15	SPARE2 _PRI_PER_OPN_IND	AI	SPARE DUCT 2 FLOW CONTROL VALVE FCV-285 PRIMARY PERCENT OPEN INDICATION	A1	11	2	FCV-285	35425 - J38	I-088	TB8 +D230B	TB3 D1R	I-094	4-20 mA	0 - 100	% OPEN
† 35425A-AI-16	SPARE3 _SEC_PER_OPN_IND	AI	SPARE DUCT 3 FLOW CONTROL VALVE FCV-295 SECONDARY PERCENT OPEN INDICATION	A1	11	3	FCV-295	35425 - J39	I-088	TB8 +D230C	TB3 D1R	I-094	4-20 mA	0 - 100	% OPEN
35425A-AI-17	ICPS_FCV305_PRI_PER_OPN_IND	AI	DUCT ICPS FLOW CONTROL VALVE FCV-305 PRIMARY PERCENT OPEN INDICATION	A1	11	4	FCV-305	35425 - J20	I-088	TB6 +D130E	TB3 D1R	I-094	4-20 mA	0 - 100	% OPEN
† 35425A-AI-18	SPARE4 _SEC_PER_OPN_IND	AI	SPARE DUCT 4 FLOW CONTROL VALVE FCV-315 SECONDARY PERCENT OPEN INDICATION	A1	11	5	FCV-315	35425 - J40	I-088	TB8 +D230D	TB3 D1R	I-094	4-20 mA	0 - 100	% OPEN
1756-IF6I ISOLATED ANALOG VOLTAGE/CURRENT INPUT MODULE															
35425A-AI-19	CS_FS_FCV213A_PER_OPN_IND	AI	DUCT CS/FS HUMIDITY FLOW CONTROL VALVE FCV-213A PERCENT OPEN INDICATION	A1	12	0	FCV-213A	35425 - J21	I-079	TB6 +D130E	TB3 D1R	I-094	4-20 mA	0 - 100	% OPEN
35425A-AI-20	SM_FCV223A_PER_OPN_IND	AI	DUCT SM HUMIDITY FLOW CONTROL VALVE FCV-223A PERCENT OPEN INDICATION	A1	12	1	FCV-223A	35425 - J23	I-079	TB6 +D130F	TB3 D1R	I-094	4-20 mA	0 - 100	% OPEN
35425A-AI-21	CS_AFT_FCV233A_PER_OPN_IND	AI	DUCT CS/AFT HUMIDITY FLOW CONTROL VALVE FCV-233A PERCENT OPEN INDICATION	A1	12	2	FCV-233A	35425 - J25	I-079	TB6 +D130G	TB3 D1R	I-094	4-20 mA	0 - 100	% OPEN
35425A-AI-22	CS_ENG_FCV273A_PER_OPN_IND	AI	DUCT CS/ENG HUMIDITY FLOW CONTROL VALVE FCV-273A PERCENT OPEN INDICATION	A1	12	3	FCV-273A	35425 - J33	I-079	TB6 +D130H	TB3 D1R	I-094	4-20 mA	0 - 100	% OPEN
35425A-AI-23	ICPS_FCV303A_PER_OPN_IND	AI	DUCT ICPS HUMIDITY FLOW CONTROL VALVE FCV-303A PERCENT OPEN INDICATION	A1	12	4	FCV-303A	35425 - J35	I-079	TB6 +D130A	TB3 D1R	I-094	4-20 mA	0 - 100	% OPEN
35425A-AI-24		AI		A1	12	5									
1756-OF8 VOLTAGE/CURRENT ANALOG OUTPUT MODULE															
35425A-AO-1	CS_IT_FCV205_PRI_OUT_ADJ	AO	DUCT CS/IT FLOW CONTROL VALVE FCV-205 PRIMARY OUTPUT ADJUSTMENT	A1	14	0	FCV-205	35425 - J13	I-088	I/O CHAN	I/O CHAN	-	4-20 mA	0 - 100	% OPEN
35425A-AO-2	CS_FS_FCV215_SEC_OUT_ADJ	AO	DUCT CS/FS FLOW CONTROL VALVE FCV-215 SECONDARY OUTPUT ADJUSTMENT	A1	14	1	FCV-215	35425 - J14	I-088	I/O CHAN	I/O CHAN	-	4-20 mA	0 - 100	% OPEN
35425A-AO-3	SM_FCV225_PRI_OUT_ADJ	AO	DUCT SM FLOW CONTROL VALVE FCV-225 PRIMARY OUTPUT ADJUSTMENT	A1	14	2	FCV-225	35425 - J15	I-088	I/O CHAN	I/O CHAN	-	4-20 mA	0 - 100	% OPEN
35425A-AO-4	CS_AFT_FCV235_SEC_OUT_ADJ	AO	DUCT CS/AFT FLOW CONTROL VALVE FCV-235 SECONDARY OUTPUT ADJUSTMENT	A1	14	3	FCV-235	35425 - J16	I-088	I/O CHAN	I/O CHAN	-	4-20 mA	0 - 100	% OPEN
† 35425A-AO-5	SPARE1 _PRI_OUT_ADJ	AO	SPARE DUCT 1 FLOW CONTROL VALVE FCV-245 PRIMARY OUTPUT ADJUSTMENT	A1	14	4	FCV-245	35425 - J37	I-088	I/O CHAN	I/O CHAN	-	4-20 mA	0 - 100	% OPEN
35425A-AO-6	LAS_FCV255_SEC_OUT_ADJ	AO	DUCT LAS FLOW CONTROL VALVE FCV-255 SECONDARY OUTPUT ADJUSTMENT	A1	14	5	FCV-255	35425 - J17	I-088	I/O CHAN	I/O CHAN	-	4-20 mA	0 - 100	% OPEN
35425A-AO-7	EC_CC_FCV265_PRI_OUT_ADJ	AO	DUCT EC/CC FLOW CONTROL VALVE FCV-265 PRIMARY OUTPUT ADJUSTMENT	A1	14	6	FCV-265	35425 - J18	I-088	I/O CHAN	I/O CHAN	-	4-20 mA	0 - 100	% OPEN
35425A-AO-8	CS_ENG_FCV275_SEC_OUT_ADJ	AO	DUCT CS/ENG FLOW CONTROL VALVE FCV-275 SECONDARY OUTPUT ADJUSTMENT	A1	14	7	FCV-275	35425 - J19	I-088	I/O CHAN	I/O CHAN	-	4-20 mA	0 - 100	% OPEN
1756-OF8 VOLTAGE/CURRENT ANALOG OUTPUT MODULE															
† 35425A-AO-9	SPARE2_PRI_OUT_ADJ	AO	SPARE DUCT 2 FLOW CONTROL VALVE FCV-285 PRIMARY OUTPUT ADJUSTMENT	A1	15	0	FCV-285	35425 - J38	I-088	I/O CHAN	I/O CHAN	-	4-20 mA	0 - 100	% OPEN
† 35425A-AO-10	SPARE3 _SEC_OUT_ADJ	AO	SPARE DUCT 3 FLOW CONTROL VALVE FCV-295 SECONDARY OUTPUT ADJUSTMENT	A1	15	1	FCV-295	35425 - J39	I-088	I/O CHAN	I/O CHAN	-	4-20 mA	0 - 100	% OPEN
35425A-AO-11	ICPS_FCV305_PRI_OUT_ADJ	AO	DUCT ICPS FLOW CONTROL VALVE FCV-305 PRIMARY OUTPUT ADJUSTMENT	A1	15	2	FCV-305	35425 - J20	I-088	I/O CHAN	I/O CHAN	-	4-20 mA	0 - 100	% OPEN
† 35425A-AO-12	SPARE4 _SEC_OUT_ADJ	AO	SPARE DUCT 4 FLOW CONTROL VALVE FCV-315 SECONDARY OUTPUT ADJUSTMENT	A1	15	3	FCV-315	35425 - J40	I-088	I/O CHAN	I/O CHAN	-	4-20 mA	0 - 100	% OPEN
35425A-AO-13		AO		A1	15	4									
35425A-AO-14		AO		A1	15	5									
35425A-AO-15		AO		A1	15	6									
35425A-AO-16		AO		A1	15	7									
1756-OF8 VOLTAGE/CURRENT ANALOG OUTPUT MODULE															
35425A-AO-17	CS_FS_FCV213A_OUT_ADJ	AO	DUCT CS/FS HUMIDITY FLOW CONTROL VALVE FCV-213A OUTPUT ADJUSTMENT	A1	16	0	FCV-213A	35425 - J21	I-079	I/O CHAN	I/O CHAN	-	4-20 mA	0 - 100	% OPEN
35425A-AO-18	SM_FCV223A_OUT_ADJ	AO	DUCT SM HUMIDITY FLOW CONTROL VALVE FCV-223A OUTPUT ADJUSTMENT	A1	16	1	FCV-223A	35425 - J23	I-079	I/O CHAN	I/O CHAN	-	4-20 mA	0 - 100	% OPEN
35425A-AO-19	CS_AFT_FCV233A_OUT_ADJ	AO	DUCT CS/AFT HUMIDITY FLOW CONTROL VALVE FCV-233A OUTPUT ADJUSTMENT	A1	16	2	FCV-233A	35425 - J25	I-079	I/O CHAN	I/O CHAN	-	4-20 mA	0 - 100	% OPEN
35425A-AO-20	CS_ENG_FCV273A_OUT_ADJ	AO	DUCT CS/ENG HUMIDITY FLOW CONTROL VALVE FCV-273A OUTPUT ADJUSTMENT	A1	16	3	FCV-273A	35425 - J33	I-079	I/O CHAN	I/O CHAN	-	4-20 mA	0 - 100	% OPEN
35425A-AO-21	ICPS_FCV303A_OUT_ADJ	AO	DUCT ICPS HUMIDITY FLOW CONTROL VALVE FCV-303A OUTPUT ADJUSTMENT	A1	16	4	FCV-303A	35425 - J35	I-079	I/O CHAN	I/O CHAN	-	4-20 mA	0 - 100	% OPEN
35425A-AO-22		AO		A1	16	5									
35425A-AO-23		AO		A1	16	6									
35425A-AO-24		AO		A1	16	7									

NOTES:

1. ALL CELLS MARKED TBD SHALL BE DETERMINED BY THE CONTRACTOR AFTER FINAL EQUIPMENT SELECTION.
2. ALL BLANK ROWS ARE SPARE I/O POINTS.
3. REFERENCE SHEET I-036 FOR ENCLOSURE 35425 CONTROLS ONE-LINES.
4. THE CONTRACTOR SHALL MODIFY THE EXISTING KGCS SOFTWARE AND PLC CONFIGURATION FOR USE IN THE CONTRACTOR PROVIDED REDUNDANT PLC SYSTEM IN ACCORDANCE WITH THE TAG INDEX TABLE ON THIS SHEET AND THE SEQUENCE OF OPERATIONS ON SHEETS I-102 THROUGH I-104.
5. CHANNEL ASSIGNMENTS FOR SPARE DUCTS ARE FOR INSTALL OPTION. THESE CHANNELS ARE DENOTED BY "†" SYMBOL.

SYM	ZONE	DESCRIPTION	DATE	APPROVED
REVISIONS				

JACOBS
Jacobs Technology Inc.

SIGNATURES		DATE
DRAWN	M. HENNIGH	3/07/14
CHECKED	J. WHITEFORD	3/07/14
SUBMITTED	S. RITTER	3/07/14
ST OF LICENSURE: TN LICENSE NO: 00110556		
APPROVED	G. WARD	3/07/14
	S. HUNT	3/07/14

NATIONAL AERONAUTICS AND SPACE ADMINISTRATION
JOHN F. KENNEDY SPACE CENTER, NASA
KENNEDY SPACE CENTER, FLORIDA

KSC LAUNCH PAD 39-B
ENVIRONMENTAL CONTROL SYSTEM (ECS) REFURBISHMENT
INSTRUMENTATION
ECS LP SYSTEM A1/B1 CHASSIS 35425
TAG INDEX SHEET 2

FILE NO.	SIZE	DWG.NO.	REV
	F	79K39602	
PCN. NO. 98898		SHEET 116 OF 187	

I-033

ECS RIO CABINET 35425 SYSTEM B1

IDENT	TAG NAME	I/O TYPE	DESCRIPTION	RACK	SLOT	CH	DEVICE TAG	ENCLOSURE INTERFACE CONNECTOR	DEVICE REFERENCE SCHEMATIC	POWER SOURCE/BUS	POWER RETURN/ NEUTRAL	POWER REFERENCE SCHEMATIC	SIGNAL TYPE	SENSOR RANGE	UNITS
1756-IF6I ISOLATED ANALOG VOLTAGE/CURRENT INPUT MODULE															
35425B-AI-1	35425_GSP_SYSB_SUP_V	AI	35425 GSP BUS B VDC (SUPPLY VOLTAGE = SIGNAL x 4)	B1	1	0	R4	N/A	I-093	N/A	TB3 D1R	I-093	0 – 10 VDC	0 – 10	VDC
35425B-AI-2		AI		B1	1	1									
35425B-AI-3		AI		B1	1	2									
35425B-AI-4		AI		B1	1	3									
35425B-AI-5		AI		B1	1	4									
35425B-AI-6		AI		B1	1	5									
1756-IB16D DC (10-30V) ISOLATED INPUT MODULE															
35425B-DI-1	35425_D220_ON_IND	DI	35425 – D220 INSTRUMENT BUS POWER ON INDICATION	B1	2	0	TB8 +D220	N/A	I-093	TB8 +D220	TB3 D1R	I-093	10 -30 VDC	PWR ON/ PWR OFF	–
35425B-DI-2	35425_D221_ON_IND	DI	35425 – D221 INSTRUMENT BUS POWER ON INDICATION	B1	2	1	TB9 +D221	N/A	I-093	TB9 +D221	TB3 D1R	I-093	10 -30 VDC	PWR ON/ PWR OFF	–
35425B-DI-3		DI		B1	2	2									
35425B-DI-4		DI		B1	2	3									
35425B-DI-5		DI		B1	2	4									
35425B-DI-6		DI		B1	2	5									
35425B-DI-7		DI		B1	2	6									
35425B-DI-8		DI		B1	2	7									
35425B-DI-9		DI		B1	2	8									
35425B-DI-10		DI		B1	2	9									
35425B-DI-11		DI		B1	2	10									
35425B-DI-12		DI		B1	2	11									
35425B-DI-13		DI		B1	2	12									
35425B-DI-14		DI		B1	2	13									
35425B-DI-15		DI		B1	2	14									
35425B-DI-16		DI		B1	2	15									
1756-OB8EI DC (10-30V) ELECTRONICALLY FUSED ISOLATED OUTPUT MODULE															
35425B-DO-1	35425_D220_ON_CMD	DO	35425 – D220 INSTRUMENT BUS POWER ON COMMAND	B1	3	0	K3	N/A	I-093	TB2 +D210	TB3 D1R	I-093	10 – 30 VDC	PWR ON/ PWR OFF	–
35425B-DO-2	35425_D221_ON_CMD	DO	35425 – D221 COMMAND BUS POWER ON COMMAND	B1	3	1	K4	N/A	I-093	TB2 +D210	TB3 D1R	I-093	10 – 30 VDC	PWR ON/ PWR OFF	–
35425B-DO-3		DO		B1	3	2									
35425B-DO-4		DO		B1	3	3									
35425B-DO-5		DO		B1	3	4									
35425B-DO-6		DO		B1	3	5									
35425B-DO-7		DO		B1	3	6									
35425B-DO-8	37568_REG_120V_ON_CMD	DO	37568 REGULATED 120VAC SOURCE MCCA SELECT ON COMMAND	B1	3	7	37568 – K8	35425 – J30	I-096	TB9 +D231A	TB3 D1R	I-094	10 – 30 VDC	PWR ON/ PWR OFF	–
1756-OB8EI DC (10-30V) ELECTRONICALLY FUSED ISOLATED OUTPUT MODULE															
35425B-DO-9	35425_D230A_ON_CMD	DO	35425 – D230A INSTRUMENT BUS POWER ON COMMAND	B1	4	0	TB8 +D230A	N/A	I-094	TB8 +D220	TB3 D1R	I-094	10 – 30 VDC	PWR ON/ PWR OFF	–
35425B-DO-10	35425_D230B_ON_CMD	DO	35425 – D230B INSTRUMENT BUS POWER ON COMMAND	B1	4	1	TB8 +D230B	N/A	I-094	TB8 +D220	TB3 D1R	I-094	10 – 30 VDC	PWR ON/ PWR OFF	–
35425B-DO-11	35425_D230C_ON_CMD	DO	35425 – D230C INSTRUMENT BUS POWER ON COMMAND	B1	4	2	TB8 +D230C	N/A	I-094	TB8 +D220	TB3 D1R	I-094	10 – 30 VDC	PWR ON/ PWR OFF	–
35425B-DO-12	35425_D230D_ON_CMD	DO	35425 – D230D INSTRUMENT BUS POWER ON COMMAND	B1	4	3	TB8 +D230D	N/A	I-094	TB8 +D220	TB3 D1R	I-094	10 – 30 VDC	PWR ON/ PWR OFF	–
35425B-DO-13	35425_D230E_ON_CMD	DO	35425 – D230E INSTRUMENT BUS POWER ON COMMAND	B1	4	4	TB8 +D230E	N/A	I-094	TB8 +D220	TB3 D1R	I-094	10 – 30 VDC	PWR ON/ PWR OFF	–
35425B-DO-14	35425_D230F_ON_CMD	DO	35425 – D230F INSTRUMENT BUS POWER ON COMMAND	B1	4	5	TB8 +D230F	N/A	I-094	TB8 +D220	TB3 D1R	I-094	10 – 30 VDC	PWR ON/ PWR OFF	–
35425B-DO-15	35425_D230G_ON_CMD	DO	35425 – D230G INSTRUMENT BUS POWER ON COMMAND	B1	4	6	TB8 +D230G	N/A	I-094	TB8 +D220	TB3 D1R	I-094	10 – 30 VDC	PWR ON/ PWR OFF	–
35425B-DO-16	35425_D230H_ON_CMD	DO	35425 – D230H INSTRUMENT BUS POWER ON COMMAND	B1	4	7	TB8 +D230H	N/A	I-094	TB8 +D220	TB3 D1R	I-094	10 – 30 VDC	PWR ON/ PWR OFF	–
1756-OB8EI DC (10-30V) ELECTRONICALLY FUSED ISOLATED OUTPUT MODULE															
35425B-DO-17	35425_D231A_ON_CMD	DO	35425 – D231A COMMAND BUS POWER ON COMMAND	B1	5	0	TB9 +D231A	N/A	I-094	TB9 +D221	TB3 D1R	I-094	10 – 30 VDC	PWR ON/ PWR OFF	–
35425B-DO-18	35425_D231B_ON_CMD	DO	35425 – D231B COMMAND BUS POWER ON COMMAND	B1	5	1	TB9 +D231B	N/A	I-094	TB9 +D221	TB3 D1R	I-094	10 – 30 VDC	PWR ON/ PWR OFF	–
35425B-DO-19	35425_D231C_ON_CMD	DO	35425 – D231C COMMAND BUS POWER ON COMMAND	B1	5	2	TB9 +D231C	N/A	I-094	TB9 +D221	TB3 D1R	I-094	10 – 30 VDC	PWR ON/ PWR OFF	–
35425B-DO-20	35425_D231D_ON_CMD	DO	35425 – D231D COMMAND BUS POWER ON COMMAND	B1	5	3	TB9 +D231D	N/A	I-094	TB9 +D221	TB3 D1R	I-094	10 – 30 VDC	PWR ON/ PWR OFF	–
35425B-DO-21	35425_D231E_ON_CMD	DO	35425 – D231E COMMAND BUS POWER ON COMMAND	B1	5	4	TB9 +D231E	N/A	I-094	TB9 +D221	TB3 D1R	I-094	10 – 30 VDC	PWR ON/ PWR OFF	–
35425B-DO-22	35425_D231F_ON_CMD	DO	35425 – D231F COMMAND BUS POWER ON COMMAND	B1	5	5	TB9 +D231F	N/A	I-094	TB9 +D221	TB3 D1R	I-094	10 – 30 VDC	PWR ON/ PWR OFF	–
35425B-DO-23	35425_D231G_ON_CMD	DO	35425 – D231G COMMAND BUS POWER ON COMMAND	B1	5	6	TB9 +D231G	N/A	I-094	TB9 +D221	TB3 D1R	I-094	10 – 30 VDC	PWR ON/ PWR OFF	–
35425B-DO-24	35425_D231H_ON_CMD	DO	35425 – D231H COMMAND BUS POWER ON COMMAND	B1	5	7	TB9 +D231H	N/A	I-094	TB9 +D221	TB3 D1R	I-094	10 – 30 VDC	PWR ON/ PWR OFF	–
1756-OX8I AC(10-265V) / DC(5-150V) ISOLATED RELAY MODULE															
35425B-DO-25	CS_IT_FCV205_SEC_SEL_POS_CMD	DO	DUCT CS/IT FLOW CONTROL VALVE FCV-205 SECONDARY POSITIVE COMMAND SELECT	B1	6	0	FCV-205	35425 – J13	I-088	N/A	N/A	–	1 N.C./1 N.O.	A1 SELECT / B1 SELECT	–
35425B-DO-26	CS_IT_FCV205_SEC_SEL_NEG_CMD	DO	DUCT CS/IT FLOW CONTROL VALVE FCV-205 SECONDARY NEGATIVE COMMAND SELECT	B1	6	1	FCV-205	35425 – J13	I-088	N/A	N/A	–	1 N.C./1 N.O.	A1 SELECT / B1 SELECT	–
35425B-DO-27	SM_FCV225_SEC_SEL_POS_CMD	DO	DUCT SM FLOW CONTROL VALVE FCV-225 SECONDARY POSITIVE COMMAND SELECT	B1	6	2	FCV-225	35425 – J15	I-088	N/A	N/A	–	1 N.C./1 N.O.	A1 SELECT / B1 SELECT	–
35425B-DO-28	SM_FCV225_SEC_SEL_NEG_CMD	DO	DUCT SM FLOW CONTROL VALVE FCV-225 SECONDARY NEGATIVE COMMAND SELECT	B1	6	3	FCV-225	35425 – J15	I-088	N/A	N/A	–	1 N.C./1 N.O.	A1 SELECT / B1 SELECT	–
† 35425B-DO-29	SPARE1_FCV245_SEC_SEL_POS_CMD	DO	SPARE DUCT 1 FLOW CONTROL VALVE FCV-245 SECONDARY POSITIVE COMMAND SELECT	B1	6	4	FCV-245	35425 – J37	I-088	N/A	N/A	–	1 N.C./1 N.O.	A1 SELECT / B1 SELECT	–
† 35425B-DO-30	SPARE1_FCV245_SEC_SEL_NEG_CMD	DO	SPARE DUCT 1 FLOW CONTROL VALVE FCV-245 SECONDARY NEGATIVE COMMAND SELECT	B1	6	5	FCV-245	35425 – J37	I-088	N/A	N/A	–	1 N.C./1 N.O.	A1 SELECT / B1 SELECT	–
35425B-DO-31	EC_CC_FCV265_SEC_SEL_POS_CMD	DO	DUCT EC/CC FLOW CONTROL VALVE FCV-265 SECONDARY POSITIVE COMMAND SELECT	B1	6	6	FCV-265	35425 – J18	I-088	N/A	N/A	–	1 N.C./1 N.O.	A1 SELECT / B1 SELECT	–
35425B-DO-32	EC_CC_FCV265_SEC_SEL_NEG_CMD	DO	DUCT EC/CC FLOW CONTROL VALVE FCV-265 SECONDARY NEGATIVE COMMAND SELECT	B1	6	7	FCV-265	35425 – J18	I-088	N/A	N/A	–	1 N.C./1 N.O.	A1 SELECT / B1 SELECT	–
1756-OX8I AC(10-265V) / DC(5-150V) ISOLATED RELAY MODULE															
† 35425B-DO-33	SPARE2_FCV285_SEC_SEL_POS_CMD	DO	SPARE DUCT 2 FLOW CONTROL VALVE FCV-285 SECONDARY POSITIVE COMMAND SELECT	B1	7	0	FCV-285	35425 – J38	I-088	N/A	N/A	–	1 N.C./1 N.O.	A1 SELECT / B1 SELECT	–
† 35425B-DO-34	SPARE2_FCV285_SEC_SEL_NEG_CMD	DO	SPARE DUCT 2 FLOW CONTROL VALVE FCV-285 SECONDARY NEGATIVE COMMAND SELECT	B1	7	1	FCV-285	35425 – J38	I-088	N/A	N/A	–	1 N.C./1 N.O.	A1 SELECT / B1 SELECT	–
35425B-DO-35	ICPS_FCV305_SEC_SEL_POS_CMD	DO	DUCT ICPS FLOW CONTROL VALVE FCV-305 SECONDARY POSITIVE COMMAND SELECT	B1	7	2	FCV-305	35425 – J20	I-088	N/A	N/A	–	1 N.C./1 N.O.	A1 SELECT / B1 SELECT	–
35425B-DO-36	ICPS_FCV305_SEC_SEL_NEG_CMD	DO	DUCT ICPS FLOW CONTROL VALVE FCV-305 SECONDARY NEGATIVE COMMAND SELECT	B1	7	3	FCV-305	35425 – J20	I-088	N/A	N/A	–	1 N.C./1 N.O.	A1 SELECT / B1 SELECT	–
35425B-DO-37		DO		B1	7	4									
35425B-DO-38		DO		B1	7	5									
35425B-DO-39		DO		B1	7	6									
35425B-DO-40		DO		B1	7	7									

NOTES:

1. ALL CELLS MARKED TBD SHALL BE DETERMINED BY THE CONTRACTOR AFTER FINAL EQUIPMENT SELECTION.
2. ALL BLANK ROWS ARE SPARE I/O POINTS.
3. REFERENCE SHEET I-036 FOR ENCLOSURE 35425 CONTROLS ONE-LINES.
4. THE CONTRACTOR SHALL MODIFY THE EXISTING KGCS SOFTWARE AND PLC CONFIGURATION FOR USE IN THE CONTRACTOR PROVIDED REDUNDANT PLC SYSTEM IN ACCORDANCE WITH THE TAG INDEX TABLE ON THIS SHEET AND THE SEQUENCE OF OPERATIONS ON SHEETS I-102 THROUGH I-104.
5. CHANNEL ASSIGNMENTS FOR SPARE DUCTS ARE FOR INSTALL OPTION. THESE CHANNELS ARE DENOTED BY "†" SYMBOL.

SYM	ZONE	DESCRIPTION	DATE	APPROVED
REVISIONS				

JACOBS
Jacobs Technology Inc.

SIGNATURES		DATE
DRAWN	M. HENNIGH	3/07/14
CHECKED	J. WHITEFORD	3/07/14
SUBMITTED	S. RITTER	3/07/14
ST OF LICENSURE: TN LICENSE NO: 00110556		
APPROVED	G. WARD	3/07/14
	S. HUNT	3/07/14

NATIONAL AERONAUTICS AND SPACE ADMINISTRATION
JOHN F. KENNEDY SPACE CENTER, NASA
KENNEDY SPACE CENTER, FLORIDA

KSC LAUNCH PAD 39-B
ENVIRONMENTAL CONTROL SYSTEM (ECS) REFURBISHMENT
INSTRUMENTATION
ECS LP SYSTEM A1/B1 CHASSIS 35425
TAG INDEX SHEET 3

I-034

FILE NO.	SIZE	DWG.NO.	REV
	F	79K39602	
PCN. NO. 98898		SHEET 117 OF 187	

ECS RIO CABINET 35425 SYSTEM B1 (CONTINUED FROM SHEET I-034)

IDENT	TAG NAME	I/O TYPE	DESCRIPTION	RACK	SLOT	CH	DEVICE TAG	ENCLOSURE INTERFACE CONNECTOR	DEVICE REFERENCE SCHEMATIC	POWER SOURCE/BUS	POWER RETURN/ NEUTRAL	POWER REFERENCE SCHEMATIC	SIGNAL TYPE	SENSOR RANGE	UNITS
1756-OX8I AC(10-265V) / DC(5-150V) ISOLATED RELAY MODULE															
35425B-DO-41		DO		B1	8	0									
35425B-DO-42		DO		B1	8	1									
35425B-DO-43		DO		B1	8	2									
35425B-DO-44		DO		B1	8	3									
35425B-DO-45		DO		B1	8	4									
35425B-DO-46		DO		B1	8	5									
35425B-DO-47		DO		B1	8	6									
35425B-DO-48		DO		B1	8	7									
1756-IA16 AC (79-132V) INPUT MODULE															
35425B-DI-17	37568_T112_ON_IND	DI	37568 REGULATED 120VAC BUS T112 ON INDICATION	B1	9	0	37568 - TB16 T112	35425 - J31	I-096	TB16 T112	TB17 TN	I-096	79 - 132 VAC	PWR ON/ PWR OFF	-
35425B-DI-18		DI		B1	9	1									
35425B-DI-19		DI		B1	9	2									
35425B-DI-20		DI		B1	9	3									
35425B-DI-21		DI		B1	9	4									
35425B-DI-22		DI		B1	9	5									
35425B-DI-23		DI		B1	9	6									
35425B-DI-24		DI		B1	9	7									
35425B-DI-25		DI		B1	9	8									
35425B-DI-26		DI		B1	9	9									
35425B-DI-27		DI		B1	9	10									
35425B-DI-28		DI		B1	9	11									
35425B-DI-29		DI		B1	9	12									
35425B-DI-30		DI		B1	9	13									
35425B-DI-31		DI		B1	9	14									
35425B-DI-32	37568_MCCC_REG_120V_ON_IND	DI	37568 MCC-C REGULATED 120VAC FEED ON INDICATION	B1	9	15	37568 CB8	35425 - J29	I-096	TB15 - 4	TB15 - 6	I-096	79 - 132 VAC	PWR ON/ PWR OFF	-
1756-IF6I ISOLATED ANALOG VOLTAGE/CURRENT INPUT MODULE															
35425B-AI-7	CS_IT_FCV205_SEC_PER_OPN_IND	AI	DUCT CS/IT FLOW CONTROL VALVE FCV-205 SECONDARY PERCENT OPEN INDICATION	B1	10	0	FCV-205	35425 - J13	I-088	TB6 +D130A	TB3 D1R	I-094	4-20 mA	0 - 100	% OPEN
35425B-AI-8	CS_FS_FCV215_PRI_PER_OPN_IND	AI	DUCT CS/FS FLOW CONTROL VALVE FCV-215 PRIMARY PERCENT OPEN INDICATION	B1	10	1	FCV-215	35425 - J14	I-088	TB6 +D130B	TB3 D1R	I-094	4-20 mA	0 - 100	% OPEN
35425B-AI-9	SM_FCV225_SEC_PER_OPN_IND	AI	DUCT SM FLOW CONTROL VALVE FCV-225 SECONDARY PERCENT OPEN INDICATION	B1	10	2	FCV-225	35425 - J15	I-088	TB6 +D130C	TB3 D1R	I-094	4-20 mA	0 - 100	% OPEN
35425B-AI-10	CS_AFT_FCV235_PRI_PER_OPN_IND	AI	DUCT CS/AFT FLOW CONTROL VALVE FCV-235 PRIMARY PERCENT OPEN INDICATION	B1	10	3	FCV-235	35425 - J16	I-088	TB6 +D130D	TB3 D1R	I-094	4-20 mA	0 - 100	% OPEN
† 35425B-AI-11	SPARE1_FCV245_SEC_PER_OPN_IND	AI	SPARE DUCT 1 FLOW CONTROL VALVE FCV-245 SECONDARY PERCENT OPEN INDICATION	B1	10	4	FCV-245	35425 - J37	I-088	TB8 +D230A	TB3 D1R	I-094	4-20 mA	0 - 100	% OPEN
35425B-AI-12	LAS_FCV255_PRI_PER_OPN_IND	AI	DUCT LAS FLOW CONTROL VALVE FCV-255 PRIMARY PERCENT OPEN INDICATION	B1	10	5	FCV-255	35425 - J17	I-088	TB6 +D130F	TB3 D1R	I-094	4-20 mA	0 - 100	% OPEN
1756-IF6I ISOLATED ANALOG VOLTAGE/CURRENT INPUT MODULE															
35425B-AI-13	EC_CC_FCV265_SEC_PER_OPN_IND	AI	DUCT EC/CC FLOW CONTROL VALVE FCV-265 SECONDARY PERCENT OPEN INDICATION	B1	11	0	FCV-265	35425 - J18	I-088	TB6 +D130G	TB3 D1R	I-094	4-20 mA	0 - 100	% OPEN
35425B-AI-14	CS_ENG_FCV275_PRI_PER_OPN_IND	AI	DUCT CS/ENG FLOW CONTROL VALVE FCV-275 PRIMARY PERCENT OPEN INDICATION	B1	11	1	FCV-275	35425 - J19	I-088	TB6 +D130H	TB3 D1R	I-094	4-20 mA	0 - 100	% OPEN
† 35425B-AI-15	SPARE2_FCV245_SEC_PER_OPN_IND	AI	SPARE DUCT 2 FLOW CONTROL VALVE FCV-285 SECONDARY PERCENT OPEN INDICATION	B1	11	2	FCV-285	35425 - J38	I-088	TB8 +D230B	TB3 D1R	I-094	4-20 mA	0 - 100	% OPEN
† 35425B-AI-16	SPARE3_FCV295_PRI_PER_OPN_IND	AI	SPARE DUCT 3 FLOW CONTROL VALVE FCV-295 PRIMARY PERCENT OPEN INDICATION	B1	11	3	FCV-295	35425 - J39	I-088	TB8 +D230C	TB3 D1R	I-094	4-20 mA	0 - 100	% OPEN
35425B-AI-17	ICPS_FCV305_SEC_PER_OPN_IND	AI	DUCT ICPS FLOW CONTROL VALVE FCV-305 SECONDARY PERCENT OPEN INDICATION	B1	11	4	FCV-305	35425 - J20	I-088	TB6 +D130E	TB3 D1R	I-094	4-20 mA	0 - 100	% OPEN
† 35425B-AI-18	SPARE4_FCV315_PRI_PER_OPN_IND	AI	SPARE DUCT 4 FLOW CONTROL VALVE FCV-315 PRIMARY PERCENT OPEN INDICATION	B1	11	5	FCV-315	35425 - J40	I-088	TB8 +D230D	TB3 D1R	I-094	4-20 mA	0 - 100	% OPEN
1756-IF6I ISOLATED ANALOG VOLTAGE/CURRENT INPUT MODULE															
35425B-AI-19	CS_FS_FCV213B_PER_OPN_IND	AI	DUCT CS/FS HUMIDITY FLOW CONTROL VALVE FCV-213B PERCENT OPEN INDICATION	B1	12	0	FCV-213B	35425 - J22	I-079	TB8 +D230E	TB3 D1R	I-094	4-20 mA	0 - 100	% OPEN
35425B-AI-20	SM_FCV223B_PER_OPN_IND	AI	DUCT SM HUMIDITY FLOW CONTROL VALVE FCV-223B PERCENT OPEN INDICATION	B1	12	1	FCV-223B	35425 - J24	I-079	TB8 +D230F	TB3 D1R	I-094	4-20 mA	0 - 100	% OPEN
35425B-AI-21	CS_AFT_FCV233B_PER_OPN_IND	AI	DUCT CS/AFT HUMIDITY FLOW CONTROL VALVE FCV-233B PERCENT OPEN INDICATION	B1	12	2	FCV-233B	35425 - J26	I-079	TB8 +D230G	TB3 D1R	I-094	4-20 mA	0 - 100	% OPEN
35425B-AI-22	CS_ENG_FCV273B_PER_OPN_IND	AI	DUCT CS/ENG HUMIDITY FLOW CONTROL VALVE FCV-273B PERCENT OPEN INDICATION	B1	12	3	FCV-273B	35425 - J34	I-079	TB8 +D230H	TB3 D1R	I-094	4-20 mA	0 - 100	% OPEN
35425B-AI-23	ICPS_FCV303B_PER_OPN_IND	AI	DUCT ICPS HUMIDITY FLOW CONTROL VALVE FCV-303B PERCENT OPEN INDICATION	B1	12	4	FCV-303B	35425 - J36	I-079	TB8 +D230A	TB3 D1R	I-094	4-20 mA	0 - 100	% OPEN
35425B-AI-24		AI		B1	12	5									
1756-OF8 VOLTAGE/CURRENT ANALOG OUTPUT MODULE															
35425B-AO-1	CS_IT_FCV205_SEC_OUT_ADJ	AO	DUCT CS/IT FLOW CONTROL VALVE FCV-205 SECONDARY OUTPUT ADJUSTMENT	B1	14	0	FCV-205	35425 - J13	I-088	I/O CHAN	I/O CHAN	-	4-20 mA	0 - 100	% OPEN
35425B-AO-2	CS_FS_FCV215_PRI_OUT_ADJ	AO	DUCT CS/FS FLOW CONTROL VALVE FCV-215 PRIMARY OUTPUT ADJUSTMENT	B1	14	1	FCV-215	35425 - J14	I-088	I/O CHAN	I/O CHAN	-	4-20 mA	0 - 100	% OPEN
35425B-AO-3	SM_FCV225_SEC_OUT_ADJ	AO	DUCT SM FLOW CONTROL VALVE FCV-225 SECONDARY OUTPUT ADJUSTMENT	B1	14	2	FCV-225	35425 - J15	I-088	I/O CHAN	I/O CHAN	-	4-20 mA	0 - 100	% OPEN
35425B-AO-4	CS_AFT_FCV235_PRI_OUT_ADJ	AO	DUCT CS/AFT FLOW CONTROL VALVE FCV-235 PRIMARY OUTPUT ADJUSTMENT	B1	14	3	FCV-235	35425 - J16	I-088	I/O CHAN	I/O CHAN	-	4-20 mA	0 - 100	% OPEN
† 35425B-AO-5	SPARE1_FCV245_SEC_OUT_ADJ	AO	SPARE DUCT 1 FLOW CONTROL VALVE FCV-245 SECONDARY OUTPUT ADJUSTMENT	B1	14	4	FCV-245	35425 - J37	I-088	I/O CHAN	I/O CHAN	-	4-20 mA	0 - 100	% OPEN
35425B-AO-6	LAS_FCV255_PRI_OUT_ADJ	AO	DUCT LAS FLOW CONTROL VALVE FCV-255 PRIMARY OUTPUT ADJUSTMENT	B1	14	5	FCV-255	35425 - J17	I-088	I/O CHAN	I/O CHAN	-	4-20 mA	0 - 100	% OPEN
35425B-AO-7	EC_CC_FCV265_SEC_OUT_ADJ	AO	DUCT EC/CC FLOW CONTROL VALVE FCV-265 SECONDARY OUTPUT ADJUSTMENT	B1	14	6	FCV-265	35425 - J18	I-088	I/O CHAN	I/O CHAN	-	4-20 mA	0 - 100	% OPEN
35425B-AO-8	CS_ENG_FCV275_PRI_OUT_ADJ	AO	DUCT CS/ENG FLOW CONTROL VALVE FCV-275 PRIMARY OUTPUT ADJUSTMENT	B1	14	7	FCV-275	35425 - J19	I-088	I/O CHAN	I/O CHAN	-	4-20 mA	0 - 100	% OPEN
1756-OF8 VOLTAGE/CURRENT ANALOG OUTPUT MODULE															
† 35425B-AO-9	SPARE2_FCV285_SEC_OUT_ADJ	AO	SPARE DUCT 2 FLOW CONTROL VALVE FCV-285 SECONDARY OUTPUT ADJUSTMENT	B1	15	0	FCV-285	35425 - J38	I-088	I/O CHAN	I/O CHAN	-	4-20 mA	0 - 100	% OPEN
† 35425B-AO-10	SPARE3_FCV295_PRI_OUT_ADJ	AO	SPARE DUCT 3 FLOW CONTROL VALVE FCV-295 PRIMARY OUTPUT ADJUSTMENT	B1	15	1	FCV-295	35425 - J39	I-088	I/O CHAN	I/O CHAN	-	4-20 mA	0 - 100	% OPEN
35425B-AO-11	ICPS_FCV305_SEC_OUT_ADJ	AO	DUCT ICPS FLOW CONTROL VALVE FCV-305 SECONDARY OUTPUT ADJUSTMENT	B1	15	2	FCV-305	35425 - J20	I-088	I/O CHAN	I/O CHAN	-	4-20 mA	0 - 100	% OPEN
† 35425B-AO-12	SPARE4_FCV315_PRI_OUT_ADJ	AO	SPARE DUCT 4 FLOW CONTROL VALVE FCV-315 PRIMARY OUTPUT ADJUSTMENT	B1	15	3	FCV-315	35425 - J40	I-088	I/O CHAN	I/O CHAN	-	4-20 mA	0 - 100	% OPEN
35425B-AO-13		AO		B1	15	4									
35425B-AO-14		AO		B1	15	5									
35425B-AO-15		AO		B1	15	6									
35425B-AO-16		AO		B1	15	7									
1756-OF8 VOLTAGE/CURRENT ANALOG OUTPUT MODULE															
35425B-AO-17	CS_FS_FCV213B_OUT_ADJ	AO	DUCT CS/FS HUMIDITY FLOW CONTROL VALVE FCV-213B OUTPUT ADJUSTMENT	B1	16	0	FCV-213B	35425 - J22	I-079	I/O CHAN	I/O CHAN	-	4-20 mA	0 - 100	% OPEN
35425B-AO-18	SM_FCV223B_OUT_ADJ	AO	DUCT SM HUMIDITY FLOW CONTROL VALVE FCV-223B OUTPUT ADJUSTMENT	B1	16	1	FCV-223B	35425 - J24	I-079	I/O CHAN	I/O CHAN	-	4-20 mA	0 - 100	% OPEN
35425B-AO-19	CS_AFT_FCV233B_OUT_ADJ	AO	DUCT CS/AFT HUMIDITY FLOW CONTROL VALVE FCV-233B OUTPUT ADJUSTMENT	B1	16	2	FCV-233B	35425 - J26	I-079	I/O CHAN	I/O CHAN	-	4-20 mA	0 - 100	% OPEN
35425B-AO-20	CS_ENG_FCV273B_OUT_ADJ	AO	DUCT CS/ENG HUMIDITY FLOW CONTROL VALVE FCV-273B OUTPUT ADJUSTMENT	B1	16	3	FCV-273B	35425 - J34	I-079	I/O CHAN	I/O CHAN	-	4-20 mA	0 - 100	% OPEN
35425B-AO-21	ICPS_FCV303B_OUT_ADJ	AO	DUCT ICPS HUMIDITY FLOW CONTROL VALVE FCV-303B OUTPUT ADJUSTMENT	B1	16	4	FCV-303B	35425 - J36	I-079	I/O CHAN	I/O CHAN	-	4-20 mA	0 - 100	% OPEN
35425B-AO-22		AO		B1	16	5									
35425B-AO-23		AO		B1	16	6									
35425B-AO-24		AO		B1	16	7									

NOTES:

1. ALL CELLS MARKED TBD SHALL BE DETERMINED BY THE CONTRACTOR AFTER FINAL EQUIPMENT SELECTION.
2. ALL BLANK ROWS ARE SPARE I/O POINTS.
3. REFERENCE SHEET I-036 FOR ENCLOSURE 35425 CONTROLS ONE-LINES.
4. THE CONTRACTOR SHALL MODIFY THE EXISTING KGCS SOFTWARE AND PLC CONFIGURATION FOR USE IN THE CONTRACTOR PROVIDED REDUNDANT PLC SYSTEM IN ACCORDANCE WITH THE TAG INDEX TABLE ON THIS SHEET AND THE SEQUENCE OF OPERATIONS ON SHEETS I-102 THROUGH I-104.
5. CHANNEL ASSIGNMENTS FOR SPARE DUCTS ARE FOR INSTALL OPTION. THESE CHANNELS ARE DENOTED BY "†" SYMBOL.

SYM	ZONE	DESCRIPTION	DATE	APPROVED
REVISIONS				

JACOBS
Jacobs Technology Inc.

SIGNATURES		DATE
DRAWN	M. HENNIGH	3/07/14
CHECKED	J. WHITEFORD	3/07/14
SUBMITTED	S. RITTER	3/07/14
ST OF LICENSURE: TN LICENSE NO: 00110556		
APPROVED	G. WARD	3/07/14
	S. HUNT	3/07/14

NATIONAL AERONAUTICS AND SPACE ADMINISTRATION
JOHN F. KENNEDY SPACE CENTER, NASA
KENNEDY SPACE CENTER, FLORIDA

KSC LAUNCH PAD 39-B
ENVIRONMENTAL CONTROL SYSTEM (ECS) REFURBISHMENT
INSTRUMENTATION
ECS LP SYSTEM A1/B1 CHASSIS 35425
TAG INDEX SHEET 4

FILE NO.	SIZE	DWG.NO.	REV
	F	79K39602	
PCN. NO. 98898		SHEET 118 OF 187	

I-035

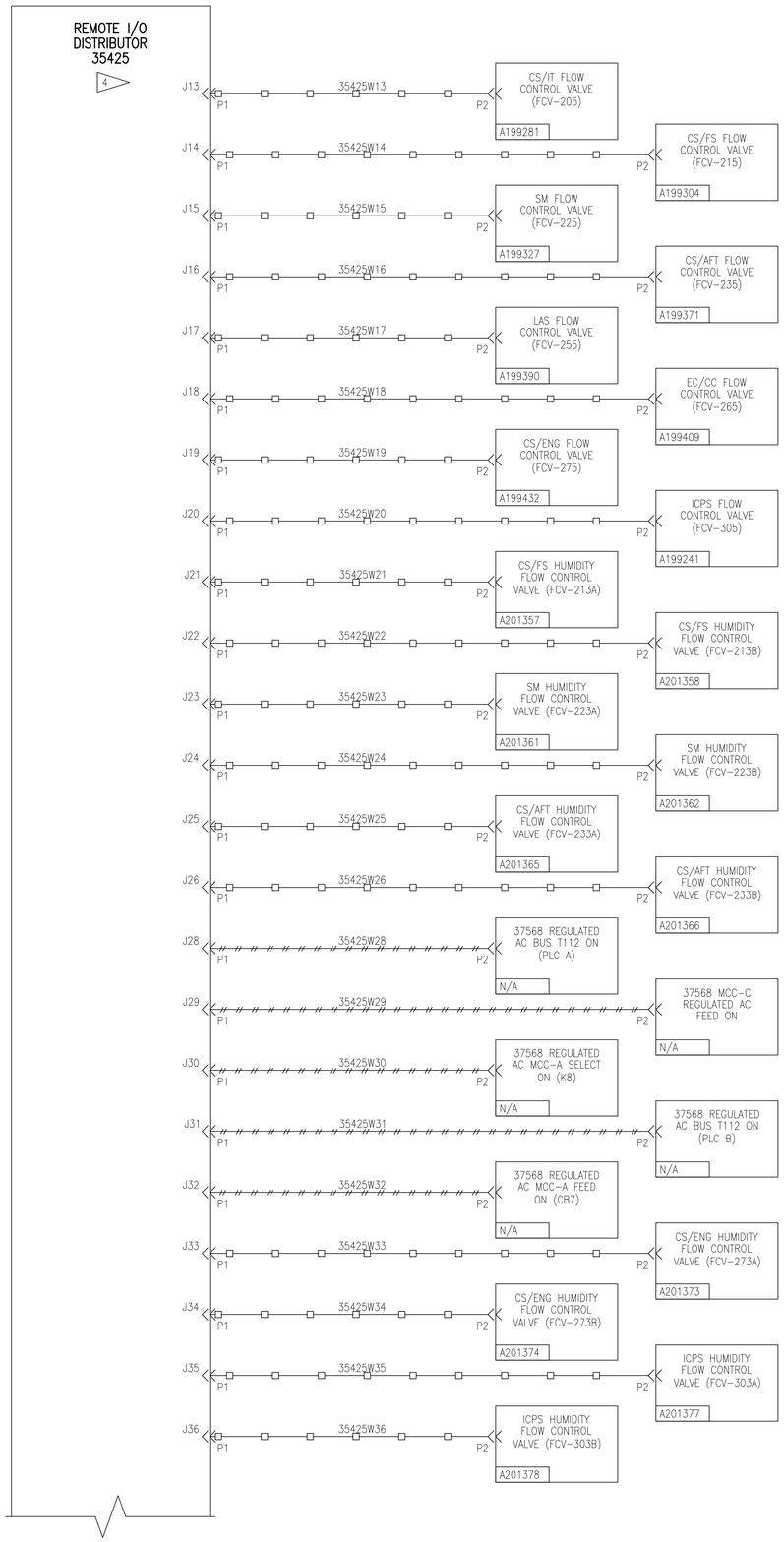

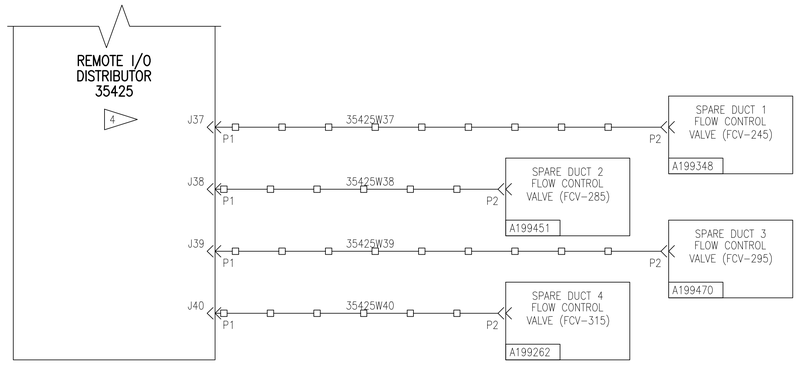

NOTES:

1. THE CONTRACTOR SHALL ADHERE TO THE FOLLOWING SPECIFICATIONS FOR ACCEPTABLE CABLE AND CONNECTOR TYPES, FABRICATION, AND INSTALLATION:
   - KSC-E-165
   - KSC-E-166
   - SSPC SP-1 GUIDELINES
   - NASA-STD-5008 (LATEST VERSION)
   - MIL-DTL-5541
   - 120E3100001 (HEAVY DUTY CABLE SPECIFICATION, GENERAL)
   - 120E3100003 (ELECTRICAL CABLE FABRICATION REQUIREMENTS)
2. THIS ONE-LINE DEPICTS FINAL CONNECTOR AND CABLING ARRANGEMENT AFTER THE REMOTE I/O CONNECTORS AND CABLING HAVE BEEN MODIFIED.
3. REFERENCE SHEETS I-014 AND I-015 FOR 28VDC POWER AND CONTROLNET CONNECTORS AND CABLING DETAILS.
4. UNLESS OTHERWISE NOTED EXISTING REMOTE I/O ENCLOSURE CABLES W13 THROUGH W32 SHALL BE REMOVED. THESE CABLES SHALL BE CAREFULLY COILED AND SAVED. THE CONTRACTOR MAY ELECT TO REUSE THESE CABLES. IN PLACE OF NEW CABLES FOR SIGNALS DESCRIBED IN ANY OF THE ONE-LINES CONTAINED WITHIN THE INSTRUMENTATION DRAWINGS. ALL CABLES THAT THE CONTRACTOR DECIDES TO REUSE MUST BE APPROVED BY THE NASA CONTRACTING OFFICER.
5. UNLESS OTHERWISE SPECIFIED ALL CABLING SHOWN ON THIS SHEET SHALL BE NEW. THESE CABLES SHALL BE PROVIDED BY AND INSTALLED BY THE CONTRACTOR.
6. REFERENCE SHEET I-101 FOR ADDITIONAL CABLE SPECIFICATION AND FABRICATION DETAILS.
7. REFERENCE NASA DOCUMENT 120E3100001, "SPECIFICATION FOR HEAVY DUTY GSE CABLE, GENERAL". ALL CABLES USED FOR THE INTERCONNECTION OF ECS EQUIPMENT AND ENCLOSURES SHALL CONFORM TO THESE SPECIFICATIONS.
8. REFERENCE APPENDIX A OF DOCUMENT 120E3100001 FOR INDIVIDUAL CABLE SPECIFICATIONS.

7 8 CABLE SPECIFICATION TABLE

LINE SYMBOL	CABLE SPECIFICATION
—□—□—□—	120E3100001-001
—//—//—//—//—//—	120E3100001-004
— — — — — — —	120E3100001-051

SYM	ZONE	DESCRIPTION	DATE	APPROVED
REVISIONS				

JACOBS
Jacobs Technology Inc.

SIGNATURES		DATE
DRAWN	M. HENNIGH	3/07/14
CHECKED	J. WHITEFORD	3/07/14
SUBMITTED	S. RITTER	3/07/14
ST OF LICENSURE: TN LICENSE NO: 00110556		
APPROVED	G. WARD	3/07/14
	S. HUNT	3/07/14

NATIONAL AERONAUTICS AND SPACE ADMINISTRATION
JOHN F. KENNEDY SPACE CENTER, NASA
KENNEDY SPACE CENTER, FLORIDA

KSC LAUNCH PAD 39-B
ENVIRONMENTAL CONTROL SYSTEM (ECS) REFURBISHMENT
INSTRUMENTATION
ECS LP SYSTEM A1/B1 CHASSIS 35425
CONTROLS ONE-LINE

I-036

FILE NO. | SIZE F | DWG.NO. 79K39602 | REV
PCN. NO. 98898 | SHEET 119 OF 187

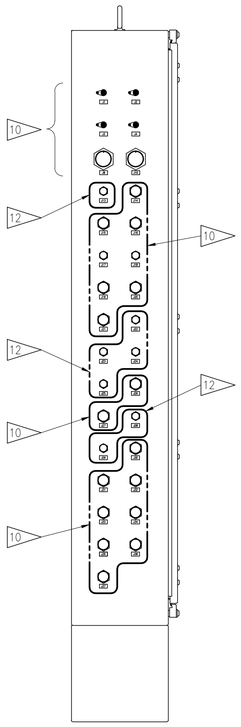

LEFT SIDE VIEW

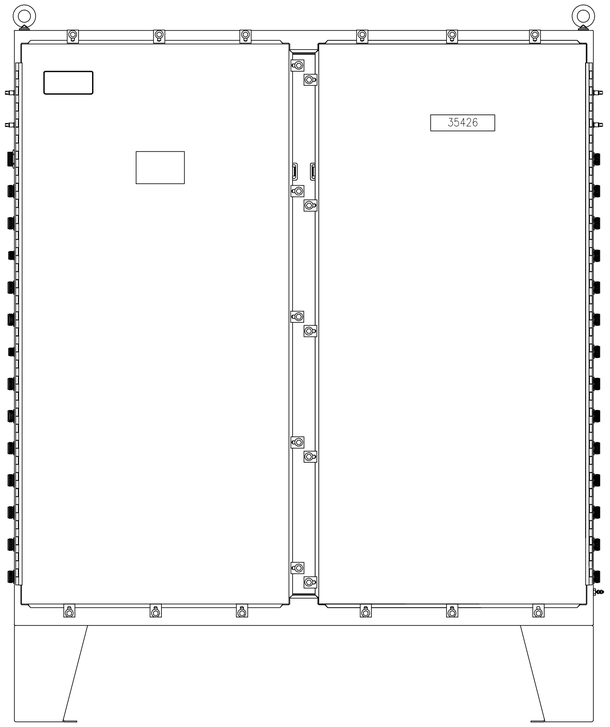

FRONT VIEW

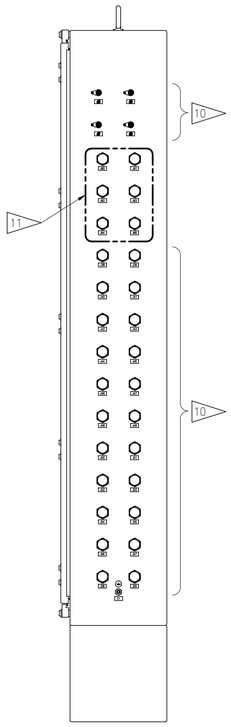

RIGHT SIDE VIEW

DETAIL 1
CONNECTOR MODIFICATIONS 15

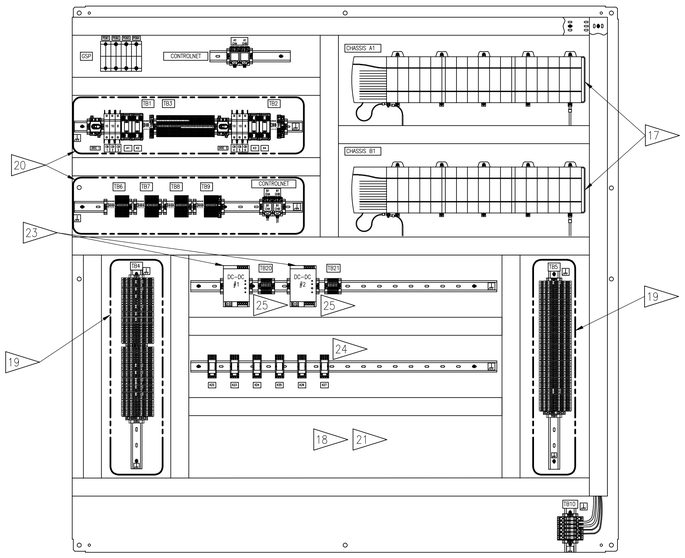

DETAIL 2
RIO ENCLOSURE MODIFICATIONS

DEMO & MODIFICATIONS NOTES:

GENERAL:

1. THIS SHEET DETAILS ALL OF THE CONNECTORS AND EQUIPMENT MODIFICATIONS REQUIRED FOR REMOTE I/O ENCLOSURE 35426.
2. CONTRACTOR SHALL BE RESPONSIBLE FOR ALL DEMOLITION, MODIFICATION, AND NEW EQUIPMENT INSTALLATION DETAILED ON SHEETS I-037 THROUGH I-043 FOR REMOTE I/O ENCLOSURE 35426.
3. UNLESS OTHERWISE SPECIFIED, FABRICATION/MODIFICATION OF ELECTRICAL GROUND SUPPORT EQUIPMENT SHALL BE IN ACCORDANCE WITH KSC-E-165 AND KSC-E-166.
4. UNLESS OTHERWISE SPECIFIED ALL WIRING, TERMINAL BLOCKS, AND ADDITIONAL EQUIPMENT SUPPLIED BY THE CONTRACTOR SHALL BE OF THE SAME TYPE AND MANUFACTURER AS CURRENTLY USED IN REMOTE I/O ENCLOSURE 35426.
5. ALL NEW EQUIPMENT SUPPLIED BY THE CONTRACTOR, AND USED FOR THE MODIFICATION OF REMOTE I/O ENCLOSURE 35426, SHALL BE APPROVED BY THE NASA CONTRACTING OFFICER BEFORE USE.
6. REFERENCE SHEET I-043 FOR CABLE ROUTING DETAILS BETWEEN REMOTE I/O ENCLOSURE 35426 AND FIELD DEVICES.

EXECUTION:

7. CONTRACTOR SHALL PROVIDE DETAILED DRAWINGS OF MODIFIED ENCLOSURES, DEVICE TERMINATIONS, AND WIRING.
8. NASA SHALL PROVIDE DRAWINGS OF EXISTING ENCLOSURE 35426 AFTER THE CONTRACT HAS BEEN AWARDED.
9. THE CONTRACTOR SHALL DETERMINE IF THE EXISTING REMOTE I/O ENCLOSURE 35426 SHALL BE MODIFIED IN THE FIELD OR REMOVED FROM THE SITE TO BE MODIFIED AT THE CONTRACTORS FABRICATION SHOP. FIELD MODIFICATION OR REMOVAL SHALL BE APPROVED BY THE NASA CONTRACTING OFFICER.

ENCLOSURE CONNECTORS:

10. CONNECTORS J1 THROUGH J10, J14 THROUGH J21, J26, J27, J30 THROUGH J59 SHALL REMAIN AS IS AND DO NOT REQUIRE DEMOLITION OR MODIFICATION.
11. CONTRACTOR SHALL SUPPLY AND INSTALL NEW CONNECTORS J60 THROUGH J65. THESE CONNECTORS ARE JAM NUT RECEPTACLES OF TYPE D38999/24SE8SN.
12. THE CONTRACTOR SHALL DEMO EXISTING CONNECTORS J13, J22 THROUGH J25, J28, AND J29 AND REPLACE THESE CONNECTORS AND WIRING WITH JAM-NUT RECEPTACLES OF TYPE D38999/24SE8SN. THE CONTRACTOR SHALL SUPPLY AND INSTALL ALL REPLACEMENT CONNECTORS AND WIRING.
13. ALL CONNECTORS REQUIRE SAFETY WIRE IN ACCORDANCE WITH AIA/NAS NASM33540. SAFETY WIRE MATERIAL SHALL BE PER AIA/NAS NASM20995 TYPE C (SST).
14. THE CONTRACTOR SHALL INSTALL AND POT ALL CONNECTORS IN ACCORDANCE WITH MIL-DTL-38999 AND KSC-STD-132.
15. THE CONTRACTOR SHALL SUPPLY AND INSTALL DUST-CAPS FOR ALL SPARE AND UNUSED CONNECTORS.
16. REFERENCE CONNECTOR ALLOCATION TABLE ON SHEET I-038 FOR CONNECTOR DETAILS.

PLC MODULES:

17. THERE ARE NO PLC MODULE CHANGES REQUIRED FOR REMOTE I/O ENCLOSURE 35426.

ENCLOSURE WIRING:

18. CONTRACTOR SHALL USE SHEETS I-037 THROUGH I-043 AND I-075 THROUGH I-101 TO VERIFY AND/OR MODIFY:
    - ALL 28VDC DISTRIBUTION WIRING.
    - ALL WIRING BETWEEN PLC AND FIELD INTERFACE TERMINAL BLOCKS.
    - ALL WIRING BETWEEN ENCLOSURE CONNECTORS AND FIELD INTERFACE TERMINAL BLOCKS.
19. CONTRACTOR SHALL SUPPLY AND INSTALL ANY ADDITIONAL FIELD INTERFACE TERMINAL BLOCKS REQUIRED TO TERMINATE ALL SIGNALS AND WIRING BETWEEN PLC'S AND ENCLOSURE INTERFACE CONNECTORS.
20. CONTRACTOR SHALL SUPPLY AND INSTALL ANY ADDITIONAL POWER TERMINAL BLOCKS REQUIRED TO CONNECT THE 28VDC SUPPLY TO THE PLC'S, FIELD INTERFACE TERMINAL BLOCKS, AND/OR ENCLOSURE INTERFACE CONNECTORS.
21. CONTRACTOR SHALL SUPPLY AND INSTALL ANY ADDITIONAL ENCLOSURE WIRING REQUIRED TO CONNECT ALL SIGNALS BETWEEN PLC'S AND ENCLOSURE INTERFACE CONNECTORS.
22. ALL WIRING FROM ENCLOSURE INTERFACE CONNECTORS SHALL BE LANDED ON THE FIELD INTERFACE TERMINAL BLOCKS BEFORE TERMINATING TO THE PLC OR OTHER INTERNAL ENCLOSURE DEVICES.

MISCELLANEOUS:

23. 28VDC-24VDC DC-DC CONVERTERS SHALL BE INSTALLED IN 35426. THESE CONVERTERS SHALL SUPPLY 24VDC COMMAND POWER TO ALL STEAM SOLENOIDS SERVICED FROM THIS ENCLOSURE. THESE DC-DC CONVERTERS ARE OF SIMILAR TYPE TO PHOENIX CONTACT 24VDC/24VDC, 20A PART NUMBER 2320102. FINAL SELECTION OF THE DC-DC CONVERTER SHALL BE APPROVED BY THE NASA CONTRACTING OFFICER.
24. ISOLATION RELAYS K-22 THROUGH K-27 ARE DIN RAIL MOUNT GENERAL PURPOSE RELAYS. THESE RELAYS SHALL HAVE 28VDC COILS AND ONE SET OF FORM C CONTACTS CAPABLE OF CARRYING A MINIMUM CURRENT OF 5A @ 24VDC. ALL RELAYS MUST BE APPROVED BY THE NASA CONTRACTING OFFICER.
25. TERMINAL BLOCKS SHALL BE OF TYPE PHOENIX CONTACT ST-4 SPRING CAGE FEED THROUGH TERMINAL BLOCK OR APPROVED EQUAL.

SYM	ZONE	DESCRIPTION	DATE	APPROVED
REVISIONS				

JACOBS
Jacobs Technology Inc.

SIGNATURES		DATE
DRAWN	M. HENNIGH	3/07/14
CHECKED	J. WHITEFORD	3/07/14
SUBMITTED	S. RITTER	3/07/14
ST OF LICENSURE: TN LICENSE NO: 00110556		
APPROVED	G. WARD	3/07/14
	S. HUNT	3/07/14

NATIONAL AERONAUTICS AND SPACE ADMINISTRATION
JOHN F. KENNEDY SPACE CENTER, NASA
KENNEDY SPACE CENTER, FLORIDA

KSC LAUNCH PAD 39-B
ENVIRONMENTAL CONTROL SYSTEM (ECS) REFURBISHMENT
INSTRUMENTATION
ECS LP SYSTEM A1/B1 CHASSIS 35426
DEMOLITION & MODIFICATION SHEET 1

FILE NO.	SIZE	DWG.NO.	REV
	F	79K39602	

PCN. NO. 98898 SHEET 120 OF 187

I-037

1 ECS RIO CABINET 35426 CONNECTOR ALLOCATION TABLE

ENCLOSURE CONNECTOR	ENCLOSURE CONNECTOR TYPE (JAMNUT RECEPTACLE)	MATING CONNECTOR (PLUG)	DESCRIPTION	DISPOSITION
J1	ADBJ79-E1-UBJ20	PL75	CONTROLNET IN PLC B1 CHA	NO MODIFICATION
J2	ADBJ79-E1-UBJ20	PL75	CONTROLNET IN PLC B1 CHB	NO MODIFICATION
J3	ADBJ79-E1-UBJ20	PL75	CONTROLNET IN PLC A1 CHB	NO MODIFICATION
J4	ADBJ79-E1-UBJ20	PL75	CONTROLNET IN PLC A1 CHA	NO MODIFICATION
J5	ADBJ79-E1-UBJ20	PL75	CONTROLNET IN PLC A1 CHA	NO MODIFICATION
J6	ADBJ79-E1-UBJ20	PL75	CONTROLNET IN PLC A1 CHB	NO MODIFICATION
J7	ADBJ79-E1-UBJ20	PL75	CONTROLNET IN PLC B1 CHA	NO MODIFICATION
J8	ADBJ79-E1-UBJ20	PL75	CONTROLNET IN PLC B1 CHB	NO MODIFICATION
J9	MS3454LS32-1P	MS3456LS32-1S	28VDC POWER INPUT SYSTEM A	NO MODIFICATION
J10	MS3454LS32-1P	MS3456LS32-1S	28VDC POWER INPUT SYSTEM B	NO MODIFICATION
J13	D38999 / 24SE8SN	D38999 / 26SE8PN	CONNECTOR REUSED FOR SOV-214A	DEMO EXISTING CONNECTOR AND REPLACE WITH D38999 / 24SE8SN. PROVIDE AND INSTALL NEW CONNECTOR, WIRING, AND TERMINAL BLOCKS
J14	D38999 / 24SE8SN	D38999 / 26SE8PN	CONNECTOR REUSED FOR DPT-417A	MODIFY / VERIFY WIRING BACK TO FIELD INTERFACE TERMINAL BLOCKS
J15	D38999 / 24SE8SN	D38999 / 26SE8PN	CONNECTOR REUSED FOR TE-414B	MODIFY / VERIFY WIRING BACK TO FIELD INTERFACE TERMINAL BLOCKS
J16	D38999 / 24SE8SN	D38999 / 26SE8PN	CONNECTOR REUSED FOR TE-414A	MODIFY / VERIFY WIRING BACK TO FIELD INTERFACE TERMINAL BLOCKS
J17	D38999 / 24SB2SN	D38999 / 26SB2PN	CONNECTOR REUSED FOR PS-513	MODIFY / VERIFY WIRING BACK TO FIELD INTERFACE TERMINAL BLOCKS
J18	D38999 / 24SB2SN	D38999 / 26SB2PN	CONNECTOR REUSED FOR PS514	MODIFY / VERIFY WIRING BACK TO FIELD INTERFACE TERMINAL BLOCKS
J19	D38999 / 24SE8SN	D38999 / 26SE8PN	CONNECTOR REUSED FOR DPT-516A	MODIFY / VERIFY WIRING BACK TO FIELD INTERFACE TERMINAL BLOCKS
J20	D38999 / 24SE8SN	D38999 / 26SE8PN	CONNECTOR REUSED FOR TE-506B	MODIFY / VERIFY WIRING BACK TO FIELD INTERFACE TERMINAL BLOCKS
J21	D38999 / 24SE8SN	D38999 / 26SE8PN	CONNECTOR REUSED FOR TE-506A	MODIFY / VERIFY WIRING BACK TO FIELD INTERFACE TERMINAL BLOCKS
J22	D38999 / 24SE8SN	D38999 / 26SE8PN	CONNECTOR USED FOR SOV-214B	DEMO EXISTING CONNECTOR AND REPLACE WITH D38999 / 24SE8SN. PROVIDE AND INSTALL NEW CONNECTOR, WIRING, AND TERMINAL BLOCKS
J23	D38999 / 24SE8SN	D38999 / 26SE8PN	CONNECTOR USED FOR SOV-224A	DEMO EXISTING CONNECTOR AND REPLACE WITH D38999 / 24SE8SN. PROVIDE AND INSTALL NEW CONNECTOR, WIRING, AND TERMINAL BLOCKS
J24	D38999 / 24SE8SN	D38999 / 26SE8PN	CONNECTOR USED FOR SOV-224B	DEMO EXISTING CONNECTOR AND REPLACE WITH D38999 / 24SE8SN. PROVIDE AND INSTALL NEW CONNECTOR, WIRING, AND TERMINAL BLOCKS
J25	D38999 / 24SE8SN	D38999 / 26SE8PN	SPARE	DEMO EXISTING CONNECTOR AND REPLACE WITH D38999 / 24SE8SN. PROVIDE AND INSTALL NEW CONNECTOR, WIRING, AND TERMINAL BLOCKS
J26	D38999 / 24SE8SN	D38999 / 26SE8PN	CONNECTOR REUSED FOR DPT-417B	MODIFY / VERIFY WIRING BACK TO FIELD INTERFACE TERMINAL BLOCKS
J27	D38999 / 24SE8SN	D38999 / 26SE8PN	CONNECTOR REUSED FOR PT-505A	MODIFY / VERIFY WIRING BACK TO FIELD INTERFACE TERMINAL BLOCKS
J28	D38999 / 24SE8SN	D38999 / 26SE8PN	CONNECTOR USED FOR SOV-234A	DEMO EXISTING CONNECTOR AND REPLACE WITH D38999 / 24SE8SN. PROVIDE AND INSTALL NEW CONNECTOR, WIRING, AND TERMINAL BLOCKS
J29	D38999 / 24SE8SN	D38999 / 26SE8PN	CONNECTOR USED FOR SOV-234B	DEMO EXISTING CONNECTOR AND REPLACE WITH D38999 / 24SE8SN. PROVIDE AND INSTALL NEW CONNECTOR, WIRING, AND TERMINAL BLOCKS
J30	D38999 / 24SE8SN	D38999 / 26SE8PN	CONNECTOR REUSED FOR PT-101A	MODIFY / VERIFY WIRING BACK TO FIELD INTERFACE TERMINAL BLOCKS
J31	D38999 / 24SE8SN	D38999 / 26SE8PN	CONNECTOR REUSED FOR PT-101B	MODIFY / VERIFY WIRING BACK TO FIELD INTERFACE TERMINAL BLOCKS
J32	D38999 / 24SE8SN	D38999 / 26SE8PN	CONNECTOR REUSED FOR PT-111B	MODIFY / VERIFY WIRING BACK TO FIELD INTERFACE TERMINAL BLOCKS
J33	D38999 / 24SE8SN	D38999 / 26SE8PN	CONNECTOR REUSED FOR TE-102A	MODIFY / VERIFY WIRING BACK TO FIELD INTERFACE TERMINAL BLOCKS
J34	D38999 / 24SE8SN	D38999 / 26SE8PN	CONNECTOR REUSED FOR TE-103A	MODIFY / VERIFY WIRING BACK TO FIELD INTERFACE TERMINAL BLOCKS
J35	D38999 / 24SE8SN	D38999 / 26SE8PN	CONNECTOR REUSED FOR TE-113A	MODIFY / VERIFY WIRING BACK TO FIELD INTERFACE TERMINAL BLOCKS
J36	D38999 / 24SE8SN	D38999 / 26SE8PN	CONNECTOR REUSED FOR TE-112A	MODIFY / VERIFY WIRING BACK TO FIELD INTERFACE TERMINAL BLOCKS
J37	D38999 / 24SE8SN	D38999 / 26SE8PN	CONNECTOR REUSED FOR TE-122A	MODIFY / VERIFY WIRING BACK TO FIELD INTERFACE TERMINAL BLOCKS
J38	D38999 / 24SE8SN	D38999 / 26SE8PN	CONNECTOR REUSED FOR TE-123A	MODIFY / VERIFY WIRING BACK TO FIELD INTERFACE TERMINAL BLOCKS
J39	D38999 / 24SE8SN	D38999 / 26SE8PN	CONNECTOR REUSED FOR PT-111A	MODIFY / VERIFY WIRING BACK TO FIELD INTERFACE TERMINAL BLOCKS
J40	D38999 / 24SE8SN	D38999 / 26SE8PN	CONNECTOR REUSED FOR DPT-516B	MODIFY / VERIFY WIRING BACK TO FIELD INTERFACE TERMINAL BLOCKS
J41	D38999 / 24SE8SN	D38999 / 26SE8PN	CONNECTOR REUSED FOR PT-121A	MODIFY / VERIFY WIRING BACK TO FIELD INTERFACE TERMINAL BLOCKS
J42	D38999 / 24SE8SN	D38999 / 26SE8PN	CONNECTOR REUSED FOR PT-121B	MODIFY / VERIFY WIRING BACK TO FIELD INTERFACE TERMINAL BLOCKS
J43	D38999 / 24SE8SN	D38999 / 26SE8PN	CONNECTOR REUSED FOR TE-113B	MODIFY / VERIFY WIRING BACK TO FIELD INTERFACE TERMINAL BLOCKS
J44	D38999 / 24SE8SN	D38999 / 26SE8PN	CONNECTOR REUSED FOR TE-123B	MODIFY / VERIFY WIRING BACK TO FIELD INTERFACE TERMINAL BLOCKS
J45	D38999 / 24SE8SN	D38999 / 26SE8PN	CONNECTOR REUSED FOR TE-112B	MODIFY / VERIFY WIRING BACK TO FIELD INTERFACE TERMINAL BLOCKS
J46	D38999 / 24SE8SN	D38999 / 26SE8PN	CONNECTOR REUSED FOR TE-122B	MODIFY / VERIFY WIRING BACK TO FIELD INTERFACE TERMINAL BLOCKS
J47	D38999 / 24SE8SN	D38999 / 26SE8PN	CONNECTOR REUSED FOR PT-505B	MODIFY / VERIFY WIRING BACK TO FIELD INTERFACE TERMINAL BLOCKS
J48	D38999 / 24SE8SN	D38999 / 26SE8PN	CONNECTOR REUSED FOR TE-103B	MODIFY / VERIFY WIRING BACK TO FIELD INTERFACE TERMINAL BLOCKS
J49	D38999 / 24SE8SN	D38999 / 26SE8PN	CONNECTOR REUSED FOR TE-102B	MODIFY / VERIFY WIRING BACK TO FIELD INTERFACE TERMINAL BLOCKS
J50	D38999 / 24SE8SN	D38999 / 26SE8PN	CONNECTOR REUSED FOR DPT-207A	MODIFY / VERIFY WIRING BACK TO FIELD INTERFACE TERMINAL BLOCKS
J51	D38999 / 24SE8SN	D38999 / 26SE8PN	CONNECTOR REUSED FOR DPT-207B	MODIFY / VERIFY WIRING BACK TO FIELD INTERFACE TERMINAL BLOCKS
J52	D38999 / 24SE8SN	D38999 / 26SE8PN	CONNECTOR REUSED FOR PT-208A	MODIFY / VERIFY WIRING BACK TO FIELD INTERFACE TERMINAL BLOCKS
J53	D38999 / 24SE8SN	D38999 / 26SE8PN	CONNECTOR REUSED FOR PT-208B	MODIFY / VERIFY WIRING BACK TO FIELD INTERFACE TERMINAL BLOCKS
J54	D38999 / 24SE8SN	D38999 / 26SE8PN	CONNECTOR REUSED FOR DPT-217A	MODIFY / VERIFY WIRING BACK TO FIELD INTERFACE TERMINAL BLOCKS
J55	D38999 / 24SE8SN	D38999 / 26SE8PN	CONNECTOR REUSED FOR DPT-217B	MODIFY / VERIFY WIRING BACK TO FIELD INTERFACE TERMINAL BLOCKS
J56	D38999 / 24SE8SN	D38999 / 26SE8PN	CONNECTOR REUSED FOR PT-218A	MODIFY / VERIFY WIRING BACK TO FIELD INTERFACE TERMINAL BLOCKS
J57	D38999 / 24SE8SN	D38999 / 26SE8PN	CONNECTOR REUSED FOR CHILLER 1	MODIFY / VERIFY WIRING BACK TO FIELD INTERFACE TERMINAL BLOCKS
J58	D38999 / 24SE8SN	D38999 / 26SE8PN	CONNECTOR REUSED FOR CHILLER 2	MODIFY / VERIFY WIRING BACK TO FIELD INTERFACE TERMINAL BLOCKS
J59	D38999 / 24SE8SN	D38999 / 26SE8PN	CONNECTOR REUSED FOR CHILLER 3	MODIFY / VERIFY WIRING BACK TO FIELD INTERFACE TERMINAL BLOCKS
J60	D38999 / 24SE8SN	D38999 / 26SE8PN	CONNECTOR USED FOR PT-218B	PROVIDE AND INSTALL NEW CONNECTOR, WIRING, AND TERMINAL BLOCKS
J61	D38999 / 24SE8SN	D38999 / 26SE8PN	CONNECTOR USED FOR DPT-227A	PROVIDE AND INSTALL NEW CONNECTOR, WIRING, AND TERMINAL BLOCKS
J62	D38999 / 24SE8SN	D38999 / 26SE8PN	CONNECTOR USED FOR DPT-227B	PROVIDE AND INSTALL NEW CONNECTOR, WIRING, AND TERMINAL BLOCKS
J63	D38999 / 24SE8SN	D38999 / 26SE8PN	CONNECTOR USED FOR PT-228A	PROVIDE AND INSTALL NEW CONNECTOR, WIRING, AND TERMINAL BLOCKS
J64	D38999 / 24SE8SN	D38999 / 26SE8PN	CONNECTOR USED FOR PT-228B	PROVIDE AND INSTALL NEW CONNECTOR, WIRING, AND TERMINAL BLOCKS
J65	D38999 / 24SE8SN	D38999 / 26SE8PN	CONNECTOR USED FOR FCV-415	PROVIDE AND INSTALL NEW CONNECTOR, WIRING, AND TERMINAL BLOCKS

2 RIO CABINET 35426 DC DEVICE POWER SCHEDULE

POWER SYSTEM FEED (A OR B)	MAIN DC POWER BUS	CABINET TB DESIGNATION	SECONDARY DC POWER BUS	CABINET TB DESIGNATION	CABINET INTERFACE CONNECTOR	DEVICE POWERED	REF. SHEET
GSP SYSTEM A	INSTRUMENT POWER BUS +D120	TB-6 (1 THRU 5)	D130A	TB6-6	35426 – J50 35426 – J52	DPT-207A PT-208A	I-097 I-097
			D130B	TB6-7	35426 – J54 35426 – J56	DPT-217A PT-218A	I-097 I-097
			D130C	TB6-8	35426 – J61 35426 – J63	DPT-227A PT-228A	I-097 I-097
			D130D	TB6-9	35426 – J19 35426 – J27	DPT-516A PT-505A	I-097 I-097
			D130E	TB6-10	35426 – J14 35426 – J30	DPT-417A PT-101A	I-097 I-097
			D130F	TB6-11	35426 – J39	PT-111A	I-097
			D130G	TB6-12	35426 – J41	PT-121A	I-097
			D130H	TB6-13	35426 – J17	PS-513	I-084
	CONTROL POWER BUS +D121	TB-7 (1 THRU 5)	D131A	TB7-6			
			D131B	TB7-7	35426 – J13	SOV-214A	I-089
			D131C	TB7-8	35426 – J23	SOV-224A	I-089
			D131D	TB7-9	35426 – J28	SOV-234A	I-089
			D131E	TB7-10	N/A	DC-DC #1	I-089
			D131F	TB7-11			
			D131G	TB7-12			
			D131H	TB7-13			
GSP SYSTEM B	INSTRUMENT POWER BUS +D220	TB-8 (1 THRU 5)	D230A	TB8-6	35426 – J51 35426 – J53	DPT-207B PT-208B	I-097 I-097
			D230B	TB8-7	35426 – J55 35426 – J60	DPT-217B PT-218B	I-097 I-097
			D230C	TB8-8	35426 – J62 35426 – J64	DPT-227B PT-228B	I-097 I-097
			D230D	TB8-9	35426 – J40 35426 – J47	DPT-516B PT-505B	I-097 I-097
			D230E	TB8-10	35426 – J26 35426 – J31	DPT-417B PT-101B	I-097 I-097
			D230F	TB8-11	35426 – J32	PT-111B	I-097
			D230G	TB8-12	35426 – J42	PT-121B	I-097
			D230H	TB8-13	35426 – J18	PS-514	I-084
	CONTROL POWER BUS +D221	TB-9 (1 THRU 5)	D231A	TB9-6			
			D231B	TB9-7	35426 – J22	SOV-214B	I-089
			D231C	TB9-8	35426 – J24	SOV-224B	I-089
			D231D	TB9-9	35426 – J29	SOV-234B	I-089
			D231E	TB9-10	N/A	DC-DC #2	I-089
			D231F	TB9-11			
			D231G	TB9-12			
			D231H	TB9-13			

DEMO & MODIFICATION NOTES:

GENERAL:

1. THE CONNECTOR ALLOCATION TABLE DETAILS CONNECTOR TYPES AND EQUIPMENT INTERCONNECTIONS.
2. THIS 28VDC DISTRIBUTION TABLE DETAILS ALL DEVICES, CONNECTIONS TO REMOTE I/O ENCLOSURE 35426, WHICH REQUIRE 28VDC SOURCE POWER.

SYM	ZONE	DESCRIPTION	DATE	APPROVED
REVISIONS				

JACOBS
Jacobs Technology Inc.

SIGNATURES		DATE
DRAWN	M. HENNIGH	3/07/14
CHECKED	J. WHITEFORD	3/07/14
SUBMITTED	S. RITTER	3/07/14
ST OF LICENSURE: TN LICENSE NO: 00110556		
APPROVED	G. WARD	3/07/14
	S. HUNT	3/07/14

NATIONAL AERONAUTICS AND SPACE ADMINISTRATION
JOHN F. KENNEDY SPACE CENTER, NASA
KENNEDY SPACE CENTER, FLORIDA

KSC LAUNCH PAD 39-B
ENVIRONMENTAL CONTROL SYSTEM (ECS) REFURBISHMENT
INSTRUMENTATION
ECS LP SYSTEM A1/B1 CHASSIS 35426
DEMOLITION & MODIFICATION SHEET 2

FILE NO.	SIZE	DWG.NO.	REV
I-038	F	79K39602	

PCN. NO. 98898 SHEET 121 OF 187

ECS RIO CABINET 35426 SYSTEM A1

IDENT	TAG NAME	I/O TYPE	DESCRIPTION	RACK	SLOT	CH	DEVICE TAG	ENCLOSURE INTERFACE CONNECTOR	DEVICE REFERENCE SCHEMATIC	POWER SOURCE/BUS	POWER RETURN/ NEUTRAL	POWER REFERENCE SCHEMATIC	SIGNAL TYPE	SENSOR RANGE	UNITS
1756-IF6I ISOLATED ANALOG VOLTAGE/CURRENT INPUT MODULE															
35426A-AI-1	35426_GSP_SYSA_SUP_V	AI	35426 GSP BUS A VDC (SUPPLY VOLTAGE = SIGNAL x 4)	A1	1	0	R2	N/A	I-093	N/A	TB3 D1R	I-093	0 - 10 VDC	0 - 10	VDC
35426A-AI-2		AI		A1	1	1									
35426A-AI-3		AI		A1	1	2									
35426A-AI-4		AI		A1	1	3									
35426A-AI-5		AI		A1	1	4									
35426A-AI-6		AI		A1	1	5									
1756-IF6I ISOLATED ANALOG VOLTAGE/CURRENT INPUT MODULE															
35426A-AI-7	CS_IT_DPT207A_PRI_SIG	AI	DUCT CS/IT PRIMARY FLOW DIFFERENTIAL PRESSURE SIGNAL	A1	2	0	DPT-207A	35426 - J50	I-097	TB6 +D130A	TB3 D1R	I-094	0 - 5 VDC	TBD	PSID
35426A-AI-8	CS_FS_DPT217A_PRI_SIG	AI	DUCT CS/FS PRIMARY FLOW DIFFERENTIAL PRESSURE SIGNAL	A1	2	1	DPT-217A	35426 - J54	I-097	TB6 +D130B	TB3 D1R	I-094	0 - 5 VDC	TBD	PSID
35426A-AI-9	SM_DPT227A_PRI_SIG	AI	DUCT SM PRIMARY FLOW DIFFERENTIAL PRESSURE SIGNAL	A1	2	2	DPT-227A	35426 - J61	I-097	TB6 +D130C	TB3 D1R	I-094	0 - 5 VDC	TBD	PSID
35426A-AI-10		AI		A1	2	3									
35426A-AI-11		AI		A1	2	4									
35426A-AI-12		AI		A1	2	5									
1756-IF6I ISOLATED ANALOG VOLTAGE/CURRENT INPUT MODULE															
35426A-AI-13	CS_IT_PT208A_PRI_SIG	AI	DUCT CS/IT PRIMARY STATIC PRESSURE SIGNAL	A1	3	0	PT-208A	35426 - J52	I-097	TB6 +D130A	TB3 D1R	I-094	0 - 5 VDC	TBD	PSIA
35426A-AI-14	CS_FS_PT218A_PRI_SIG	AI	DUCT CS/FS PRIMARY STATIC PRESSURE SIGNAL	A1	3	1	PT-218A	35426 - J56	I-097	TB6 +D130B	TB3 D1R	I-094	0 - 5 VDC	TBD	PSIA
35426A-AI-15	SM_PT228A_PRI_SIG	AI	DUCT SM PRIMARY STATIC PRESSURE SIGNAL	A1	3	2	PT-228A	35426 - J63	I-097	TB6 +D130C	TB3 D1R	I-094	0 - 5 VDC	TBD	PSIA
35426A-AI-16		AI		A1	3	3									
35426A-AI-17		AI		A1	3	4									
35426A-AI-18		AI		A1	3	5									
1756-IF6I ISOLATED ANALOG VOLTAGE/CURRENT INPUT MODULE															
35426A-AI-19	WG_TANK_PRI_PRESS_SIG	AI	WATER GLYCOL TANK PRIMARY PRESSURE SIGNAL	A1	4	0	PT-505A	35426 - J27	I-097	TB6 +D130D	TB3 D1R	I-094	0 - 5 VDC	TBD	PSIG
35426A-AI-20		AI		A1	4	1									
35426A-AI-21		AI		A1	4	2									
35426A-AI-22		AI		A1	4	3									
35426A-AI-23		AI		A1	4	4									
35426A-AI-24		AI		A1	4	5									
1756-IF6I ISOLATED ANALOG VOLTAGE/CURRENT INPUT MODULE															
35426A-AI-25	WG_PRI_FLOW_DP_SIG	AI	WATTER GLYCOL PRIMARY FLOW DIFFERENTIAL PRESSURE SIGNAL	A1	5	0	DPT-516A	35426 - J19	I-097	TB6 +D130D	TB3 D1R	I-094	0 - 5 VDC	0 - 5	PSID
35426A-AI-26	CT_CW_PRI_FLOW_DP_SIG	AI	COOLING TOWER COOLING WATER PRIMARY FLOW DIFFERENTIAL PRESSURE SIGNAL	A1	5	1	DPT-417A	35426 - J14	I-097	TB6 +D130E	TB3 D1R	I-094	0 - 5 VDC	0 - 5	PSID
35426A-AI-27	N_CC_COIL_PRI_IN_PRESS_SIG	AI	NORTH COOLING CHAMBER COIL PRIMARY INLET PRESSURE SIGNAL	A1	5	2	PT-101A	35426 - J30	I-097	TB6 +D130E	TB3 D1R	I-094	0 - 5 VDC	0 - 5	PSIG
35426A-AI-28	S_CC_COIL_PRI_IN_PRESS_SIG	AI	SOUTH COOLING CHAMBER COIL PRIMARY INLET PRESSURE SIGNAL	A1	5	3	PT-111A	35426 - J39	I-097	TB6 +D130F	TB3 D1R	I-094	0 - 5 VDC	0 - 5	PSIG
35426A-AI-29	ICPS_CC_COIL_PRI_IN_PRESS_SIG	AI	ICPS CHAMBER COIL PRIMARY INLET PRESSURE SIGNAL	A1	5	4	PT-121A	35426 - J41	I-097	TB6 +D130G	TB3 D1R	I-094	0 - 5 VDC	0 - 5	PSIG
35426A-AI-30		AI		A1	5	5									
1756-IR6I RTD INPUT MODULE															
35426A-AI-31	WG_TANK_PRI_TEMP_SIG	AI	WATER GLYCOL TANK PRIMARY TEMPERATURE SIGNAL	A1	6	0	TE-506A	35426 - J21	I-086	I/O CHAN	I/O CHAN	-	4-WIRE RTD	25 - 100	DEG F
35426A-AI-32	CT_CW_PRI_TEMP_SIG	AI	COOLING TOWER COOLING WATER PRIMARY TEMPERATURE SIGNAL	A1	6	1	TE-414A	35426 - J16	I-086	I/O CHAN	I/O CHAN	-	4-WIRE RTD	25 - 100	DEG F
35426A-AI-33		AI		A1	6	2									
35426A-AI-34		AI		A1	6	3									
35426A-AI-35		AI		A1	6	4									
35426A-AI-36		AI		A1	6	5									
1756-IR6I RTD INPUT MODULE															
35426A-AI-37	N_CC_CCOIL_PRI_TEMP_SIG	AI	NORTH COOLING CHAMBER COLD COIL PRIMARY TEMPERATURE SIGNAL	A1	7	0	TE-103A	35426 - J34	I-086	I/O CHAN	I/O CHAN	-	4-WIRE RTD	25 - 100	DEG F
35426A-AI-38	N_CC_PCOOL_PRI_TEMP_SIG	AI	NORTH COOLING CHAMBER PRECOOL COIL PRIMARY TEMPERATURE SIGNAL	A1	7	1	TE-102A	35426 - J33	I-086	I/O CHAN	I/O CHAN	-	4-WIRE RTD	50 - 200	DEG F
35426A-AI-39	S_CC_CCOOL_SEC_TEMP_SIG	AI	SOUTH COOLING CHAMBER COLD COIL SECONDARY TEMPERATURE SIGNAL	A1	7	2	TE-113B	35426 - J43	I-086	I/O CHAN	I/O CHAN	-	4-WIRE RTD	25 - 100	DEG F
35426A-AI-40	S_CC_PCOIL_SEC_TEMP_SIG	AI	SOUTH COOLING CHAMBER PRECOOL COIL SECONDARY TEMPERATURE SIGNAL	A1	7	3	TE-112B	35426 - J45	I-086	I/O CHAN	I/O CHAN	-	4-WIRE RTD	50 - 200	DEG F
35426A-AI-41	ICPS_CC_CCOIL_PRI_TEMP_SIG	AI	ICPS COOLING CHAMBER COLD COIL PRIMARY TEMPERATURE SIGNAL	A1	7	4	TE-123A	35426 - J38	I-086	I/O CHAN	I/O CHAN	-	4-WIRE RTD	25 - 100	DEG F
35426A-AI-42	ICPS_CC_PCOOL_PRI_TEMP_SIG	AI	ICPS COOLING CHAMBER PRECOOL COIL PRIMARY TEMPERATURE SIGNAL	A1	7	5	TE-122A	35426 - J37	I-086	I/O CHAN	I/O CHAN	-	4-WIRE RTD	50 - 200	DEG F
1756-OF8 VOLTAGE/CURRENT ANALOG OUTPUT MODULE															
35426A-AO-1		AO		A1	8	0									
35426A-AO-2		AO		A1	8	1									
35426A-AO-3	CT_BYPASS_PRI_OUT_ADJ	AO	COOLING TOWER BYPASS VALVE PRIMARY OUTPUT ADJUSTMENT	A1	8	2	FCV-415	35426 - J65	I-088	I/O CHAN	I/O CHAN	-	4 - 20mA	0 - 100	% OPEN
35426A-AO-4		AO		A1	8	3									
35426A-AO-5		AO		A1	8	4									
35426A-AO-6		AO		A1	8	5									
35426A-AO-7	CH123_PRI_CTL_OUT_ADJ	AO	CHILLERS 1, 2, AND 3 PRIMARY CONTROL OUTPUT ADJUSTMENT	A1	8	6	CH-1, CH-2, CH-3	35426 - J57, J58, J59	I-080	I/O CHAN	I/O CHAN	-	0-10 VDC	0 - 100	% LOAD
35426A-AO-8		AO		A1	8	7									
1756-IB16D DC (10-30V) ISOLATED INPUT MODULE															
35426A-DI-1	35426_D120_ON_IND	DI	35426 - D120 INSTRUMENT BUS POWER ON INDICATION	A1	9	0	TB6 +D120	N/A	I-093	TB6 +D120	TB3 D1R	I-093	10 -30 VDC	PWR ON/ PWR OFF	-
35426A-DI-2	35426_D121_ON_IND	DI	35426 - D121 INSTRUMENT BUS POWER ON INDICATION	A1	9	1	TB7 +D121	N/A	I-093	TB7 +D121	TB3 D1R	I-093	10 -30 VDC	PWR ON/ PWR OFF	-
35426A-DI-3		DI		A1	9	2									
35426A-DI-4		DI		A1	9	3									
35426A-DI-5		DI		A1	9	4									
35426A-DI-6		DI		A1	9	5									
35426A-DI-7		DI		A1	9	6									
35426A-DI-8		DI		A1	9	7									
35426A-DI-9		DI		A1	9	8									
35426A-DI-10		DI		A1	9	9									
35426A-DI-11		DI		A1	9	10									
35426A-DI-12		DI		A1	9	11									
35426A-DI-13		DI		A1	9	12									
35426A-DI-14		DI		A1	9	13									
35426A-DI-15		DI		A1	9	14									
35426A-DI-16		DI		A1	9	15									

NOTES:

1. ALL CELLS MARKED TBD SHALL BE DETERMINED BY THE CONTRACTOR AFTER FINAL EQUIPMENT SELECTION.
2. ALL BLANK ROWS ARE SPARE I/O POINTS.
3. REFERENCE SHEET I-043 FOR ENCLOSURE 35426 CONTROLS ONE-LINES.
4. THE CONTRACTOR SHALL MODIFY THE EXISTING KGCS SOFTWARE AND PLC CONFIGURATION FOR USE IN THE CONTRACTOR PROVIDED REDUNDANT PLC SYSTEM IN ACCORDANCE WITH THE TAG INDEX TABLE ON THIS SHEET AND THE SEQUENCE OF OPERATIONS ON SHEETS I-102 THROUGH I-104.

SYM	ZONE	DESCRIPTION	DATE	APPROVED
REVISIONS				

JACOBS
Jacobs Technology Inc.

SIGNATURES		DATE
DRAWN	M. HENNIGH	3/07/14
CHECKED	J. WHITEFORD	3/07/14
SUBMITTED	S. RITTER	3/07/14
ST OF LICENSURE: TN LICENSE NO: 00110556		
APPROVED	G. WARD	3/07/14
	S. HUNT	3/07/14

NATIONAL AERONAUTICS AND SPACE ADMINISTRATION
JOHN F. KENNEDY SPACE CENTER, NASA
KENNEDY SPACE CENTER, FLORIDA

KSC LAUNCH PAD 39-B
ENVIRONMENTAL CONTROL SYSTEM (ECS) REFURBISHMENT
INSTRUMENTATION
ECS LP SYSTEM A1/B1 CHASSIS 35426
TAG INDEX SHEET 1

FILE NO.	SIZE	DWG.NO.	REV
	F	79K39602	
PCN. NO. 98898		SHEET 122 OF 187	

I-039

ECS RIO CABINET 35426 SYSTEM A1 (CONTINUED FROM SHEET I-039)

IDENT	TAG NAME	I/O TYPE	DESCRIPTION	RACK	SLOT	CH	DEVICE TAG	ENCLOSURE INTERFACE CONNECTOR	DEVICE REFERENCE SCHEMATIC	POWER SOURCE/BUS	POWER RETURN/ NEUTRAL	POWER REFERENCE SCHEMATIC	SIGNAL TYPE	SENSOR RANGE	UNITS
1756-IB16D DC (10-30V) ISOLATED INPUT MODULE															
35426A-DI-17		DI		A1	10	0									
35426A-DI-18		DI		A1	10	1									
35426A-DI-19		DI		A1	10	2									
35426A-DI-20		DI		A1	10	3									
35426A-DI-21	WG_P1_PRESS_SW_IND	DI	WATER GLYCOL PUMP 1 PRESSURE SWITCH INDICATION	A1	10	4	PS-513	35426 - J17	I-084	TB6 +D130H	TB3 D1R	I-094	10 -30 VDC	ON AT 60 PSI	-
35426A-DI-22		DI		A1	10	5									
35426A-DI-23		DI		A1	10	6									
35426A-DI-24		DI		A1	10	7									
35426A-DI-25		DI		A1	10	8									
35426A-DI-26		DI		A1	10	9									
35426A-DI-27		DI		A1	10	10									
35426A-DI-28		DI		A1	10	11									
35426A-DI-29		DI		A1	10	12									
35426A-DI-30		DI		A1	10	13									
35426A-DI-31		DI		A1	10	14									
35426A-DI-32		DI		A1	10	15									
1756-OB8EI DC (10-30V) ELECTRONICALLY FUSED ISOLATED OUTPUT MODULE															
35426A-DO-1	35426_D120_ON_CMD	DO	35426 - D120 INSTRUMENT BUS POWER ON COMMAND	A1	13	0	K1	N/A	I-093	TB1 +D110	TB3 D1R	I-093	10 - 30 VDC	PWR ON/ PWR OFF	-
35426A-DO-2	35426_D121_ON_CMD	DO	35426 - D121 COMMAND BUS POWER ON COMMAND	A1	13	1	K2	N/A	I-093	TB1 +D110	TB3 D1R	I-093	10 - 30 VDC	PWR ON/ PWR OFF	-
35426A-DO-3		DO		A1	13	2									
35426A-DO-4		DO		A1	13	3									
35426A-DO-5		DO		A1	13	4									
35426A-DO-6		DO		A1	13	5									
35426A-DO-7		DO		A1	13	6									
35426A-DO-8		DO		A1	13	7									
1756-OB8EI DC (10-30V) ELECTRONICALLY FUSED ISOLATED OUTPUT MODULE															
35426A-DO-9	35426_D130A_ON_CMD	DO	35426 - D130A INSTRUMENT BUS POWER ON COMMAND	A1	14	0	TB6 +D130A	N/A	I-094	TB6 +D120	TB3 D1R	I-094	10 - 30 VDC	PWR ON/ PWR OFF	-
35426A-DO-10	35426_D130B_ON_CMD	DO	35426 - D130B INSTRUMENT BUS POWER ON COMMAND	A1	14	1	TB6 +D130B	N/A	I-094	TB6 +D120	TB3 D1R	I-094	10 - 30 VDC	PWR ON/ PWR OFF	-
35426A-DO-11	35426_D130C_ON_CMD	DO	35426 - D130C INSTRUMENT BUS POWER ON COMMAND	A1	14	2	TB6 +D130C	N/A	I-094	TB6 +D120	TB3 D1R	I-094	10 - 30 VDC	PWR ON/ PWR OFF	-
35426A-DO-12	35426_D130D_ON_CMD	DO	35426 - D130D INSTRUMENT BUS POWER ON COMMAND	A1	14	3	TB6 +D130D	N/A	I-094	TB6 +D120	TB3 D1R	I-094	10 - 30 VDC	PWR ON/ PWR OFF	-
35426A-DO-13	35426_D130E_ON_CMD	DO	35426 - D130E INSTRUMENT BUS POWER ON COMMAND	A1	14	4	TB6 +D130E	N/A	I-094	TB6 +D120	TB3 D1R	I-094	10 - 30 VDC	PWR ON/ PWR OFF	-
35426A-DO-14	35426_D130F_ON_CMD	DO	35426 - D130F INSTRUMENT BUS POWER ON COMMAND	A1	14	5	TB6 +D130F	N/A	I-094	TB6 +D120	TB3 D1R	I-094	10 - 30 VDC	PWR ON/ PWR OFF	-
35426A-DO-15	35426_D130G_ON_CMD	DO	35426 - D130G INSTRUMENT BUS POWER ON COMMAND	A1	14	6	TB6 +D130G	N/A	I-094	TB6 +D120	TB3 D1R	I-094	10 - 30 VDC	PWR ON/ PWR OFF	-
35426A-DO-16	35426_D130H_ON_CMD	DO	35426 - D130H INSTRUMENT BUS POWER ON COMMAND	A1	14	7	TB6 +D130H	N/A	I-094	TB6 +D120	TB3 D1R	I-094	10 - 30 VDC	PWR ON/ PWR OFF	-
1756-OB8EI DC (10-30V) ELECTRONICALLY FUSED ISOLATED OUTPUT MODULE															
35426A-DO-17	35426_D131A_ON_CMD	DO	35426 - D131A COMMAND BUS POWER ON COMMAND	A1	15	0	TB7 +D131A	N/A	I-094	TB7 +D121	TB3 D1R	I-094	10 - 30 VDC	PWR ON/ PWR OFF	-
35426A-DO-18	35426_D131B_ON_CMD	DO	35426 - D131B COMMAND BUS POWER ON COMMAND	A1	15	1	TB7 +D131B	N/A	I-094	TB7 +D121	TB3 D1R	I-094	10 - 30 VDC	PWR ON/ PWR OFF	-
35426A-DO-19	35426_D131C_ON_CMD	DO	35426 - D131C COMMAND BUS POWER ON COMMAND	A1	15	2	TB7 +D131C	N/A	I-094	TB7 +D121	TB3 D1R	I-094	10 - 30 VDC	PWR ON/ PWR OFF	-
35426A-DO-20	35426_D131D_ON_CMD	DO	35426 - D131D COMMAND BUS POWER ON COMMAND	A1	15	3	TB7 +D131D	N/A	I-094	TB7 +D121	TB3 D1R	I-094	10 - 30 VDC	PWR ON/ PWR OFF	-
35426A-DO-21	35426_D131E_ON_CMD	DO	35426 - D131E COMMAND BUS POWER ON COMMAND	A1	15	4	TB7 +D131E	N/A	I-094	TB7 +D121	TB3 D1R	I-094	10 - 30 VDC	PWR ON/ PWR OFF	-
35426A-DO-22	35426_D131F_ON_CMD	DO	35426 - D131F COMMAND BUS POWER ON COMMAND	A1	15	5	TB7 +D131F	N/A	I-094	TB7 +D121	TB3 D1R	I-094	10 - 30 VDC	PWR ON/ PWR OFF	-
35426A-DO-23	35426_D131G_ON_CMD	DO	35426 - D131G COMMAND BUS POWER ON COMMAND	A1	15	6	TB7 +D131G	N/A	I-094	TB7 +D121	TB3 D1R	I-094	10 - 30 VDC	PWR ON/ PWR OFF	-
35426A-DO-24	35426_D131H_ON_CMD	DO	35426 - D131H COMMAND BUS POWER ON COMMAND	A1	15	7	TB7 +D131H	N/A	I-094	TB7 +D121	TB3 D1R	I-094	10 - 30 VDC	PWR ON/ PWR OFF	-
1756-OB8EI DC (10-30V) ELECTRONICALLY FUSED ISOLATED OUTPUT MODULE															
35426A-DO-25	CS_FS_SOV214A_OPN_CMD	DO	DUCT CS/FS HUMIDITY SOLENOID ISOLATION VALVE SOV-214A OPEN COMMAND	A1	16	0	SOV-214A	35426 - J13	I-089	TB7 +D131B	TB3 D1R	I-094	10 - 30 VDC	OPEN/DON'T OPEN	-
35426A-DO-26	SM_SOV224A_OPN_CMD	DO	DUCT SM HUMIDITY SOLENOID ISOLATION VALVE SOV-224A OPEN COMMAND	A1	16	1	SOV-224A	35426 - J23	I-089	TB7 +D131C	TB3 D1R	I-094	10 - 30 VDC	OPEN/DON'T OPEN	-
35426A-DO-27	CS_AFT_SOV234A_OPN_CMD	DO	DUCT CS/AFT HUMIDITY SOLENOID ISOLATION VALVE SOV-234A OPEN COMMAND	A1	16	2	SOV-234A	35426 - J28	I-089	TB7 +D131D	TB3 D1R	I-094	10 - 30 VDC	OPEN/DON'T OPEN	-
35426A-DO-28		DO		A1	16	3									
35426A-DO-29		DO		A1	16	4									
35426A-DO-30		DO		A1	16	5									
35426A-DO-31		DO		A1	16	6									
35426A-DO-32		DO		A1	16	7									

NOTES:

1. ALL CELLS MARKED TBD SHALL BE DETERMINED BY THE CONTRACTOR AFTER FINAL EQUIPMENT SELECTION.
2. ALL BLANK ROWS ARE SPARE I/O POINTS.
3. REFERENCE SHEET I-043 FOR ENCLOSURE 35426 CONTROLS ONE-LINES.
4. THE CONTRACTOR SHALL MODIFY THE EXISTING KGCS SOFTWARE AND PLC CONFIGURATION FOR USE IN THE CONTRACTOR PROVIDED REDUNDANT PLC SYSTEM IN ACCORDANCE WITH THE TAG INDEX TABLE ON THIS SHEET AND THE SEQUENCE OF OPERATIONS ON SHEETS I-102 THROUGH I-104.

SYM	ZONE	DESCRIPTION	DATE	APPROVED
REVISIONS				

JACOBS
Jacobs Technology Inc.

SIGNATURES	DATE
DRAWN M. HENNIGH	3/07/14
CHECKED J. WHITEFORD	3/07/14
SUBMITTED S. RITTER	3/07/14
ST OF LICENSURE: TN LICENSE NO: 00110556	
APPROVED G. WARD	3/07/14
S. HUNT	3/07/14

NATIONAL AERONAUTICS AND SPACE ADMINISTRATION
JOHN F. KENNEDY SPACE CENTER, NASA
KENNEDY SPACE CENTER, FLORIDA

KSC LAUNCH PAD 39-B
ENVIRONMENTAL CONTROL SYSTEM (ECS) REFURBISHMENT
INSTRUMENTATION
ECS LP SYSTEM A1/B1 CHASSIS 35426
TAG INDEX SHEET 2

FILE NO.	SIZE	DWG.NO.	REV
	F	79K39602	

PCN. NO. 98898 SHEET 123 OF 187

I-040

ECS RIO CABINET 35426 SYSTEM B1

IDENT	TAG NAME	I/O TYPE	DESCRIPTION	RACK	SLOT	CH	DEVICE TAG	ENCLOSURE INTERFACE CONNECTOR	DEVICE REFERENCE SCHEMATIC	POWER SOURCE/BUS	POWER RETURN/ NEUTRAL	POWER REFERENCE SCHEMATIC	SIGNAL TYPE	SENSOR RANGE	UNITS
1756-IF6I ISOLATED ANALOG VOLTAGE/CURRENT INPUT MODULE															
35426B-AI-1	35426_GSP_SYSB_SUP_V	AI	35426 GSP BUS B VDC (SUPPLY VOLTAGE = SIGNAL x 4)	B1	1	0	R4	N/A	I-093	N/A	TB3 D1R	I-093	0 - 10 VDC	0 - 10	VDC
35426B-AI-2		AI		B1	1	1									
35426B-AI-3		AI		B1	1	2									
35426B-AI-4		AI		B1	1	3									
35426B-AI-5		AI		B1	1	4									
35426B-AI-6		AI		B1	1	5									
1756-IF6I ISOLATED ANALOG VOLTAGE/CURRENT INPUT MODULE															
35426B-AI-7	CS_IT_DPT207B_SEC_SIG	AI	DUCT CS/IT SECONDARY FLOW DIFFERENTIAL PRESSURE SIGNAL	B1	2	0	DPT-207B	35426 - J51	I-097	TB8 +230A	TB3 D1R	I-094	0 - 5 VDC	TBD	PSID
35426B-AI-8	CS_FS_DPT217B_SEC_SIG	AI	DUCT CS/FS SECONDARY FLOW DIFFERENTIAL PRESSURE SIGNAL	B1	2	1	DPT-217B	35426 - J55	I-097	TB8 +230B	TB3 D1R	I-094	0 - 5 VDC	TBD	PSID
35426B-AI-9	SM_DPT227B_SEC_SIG	AI	DUCT SM SECONDARY FLOW DIFFERENTIAL PRESSURE SIGNAL	B1	2	2	DPT-227B	35426 - J62	I-097	TB8 +230C	TB3 D1R	I-094	0 - 5 VDC	TBD	PSID
35426B-AI-10		AI		B1	2	3									
35426B-AI-11		AI		B1	2	4									
35426B-AI-12		AI		B1	2	5									
1756-IF6I ISOLATED ANALOG VOLTAGE/CURRENT INPUT MODULE															
35426B-AI-13	CS_IT_PT208B_SEC_SIG	AI	DUCT CS/IT SECONDARY STATIC PRESSURE SIGNAL	B1	3	0	PT-208B	35426 - J53	I-097	TB8 +230A	TB3 D1R	I-094	0 - 5 VDC	TBD	PSIA
35426B-AI-14	CS_FS_PT218B_SEC_SIG	AI	DUCT CS/FS SECONDARY STATIC PRESSURE SIGNAL	B1	3	1	PT-218B	35426 - J60	I-097	TB8 +230B	TB3 D1R	I-094	0 - 5 VDC	TBD	PSIA
35426B-AI-15	SM_A_PT228B_SEC_SIG	AI	DUCT M/SA SECONDARY STATIC PRESSURE SIGNAL	B1	3	2	PT-228B	35426 - J64	I-097	TB8 +230C	TB3 D1R	I-094	0 - 5 VDC	TBD	PSIA
35426B-AI-16		AI		B1	3	3									
35426B-AI-17		AI		B1	3	4									
35426B-AI-18		AI		B1	3	5									
1756-IF6I ISOLATED ANALOG VOLTAGE/CURRENT INPUT MODULE															
35426B-AI-19	WG_TANK_SEC_PRESS_SIG	AI	WATER GLYCOL TANK SECONDARY PRESSURE SIGNAL	B1	4	0	PT-505B	35426 - J47	I-097	TB8 +230D	TB3 D1R	I-094	0 - 5 VDC	TBD	PSIG
35426B-AI-20		AI		B1	4	1									
35426B-AI-21		AI		B1	4	2									
35426B-AI-22		AI		B1	4	3									
35426B-AI-23		AI		B1	4	4									
35426B-AI-24		AI		B1	4	5									
1756-IF6I ISOLATED ANALOG VOLTAGE/CURRENT INPUT MODULE															
35426B-AI-25	WG_SEC_FLOW_DP_SIG	AI	WATER GLYCOL SECONDARY FLOW DIFFERENTIAL PRESSURE SIGNAL	B1	5	0	DPT-516B	35426 -J40	I-097	TB8 +230D	TB3 D1R	I-094	0 - 5 VDC	0 - 5	PSID
35426B-AI-26	CT_CW_SEC_FLOW_DP_SIG	AI	COOLING TOWER COOLING WATER SECONDARY FLOW DIFFERENTIAL PRESSURE SIGNAL	B1	5	1	DPT-417B	35426 - J26	I-097	TB8 +230E	TB3 D1R	I-094	0 - 5 VDC	0 - 5	PSID
35426B-AI-27	N_CC_COIL_SEC_IN_PRESS_SIG	AI	NORTH COOLING CHAMBER COIL SECONDARY INLET PRESSURE SIGNAL	B1	5	2	PT-101B	35426 - J31	I-097	TB8 +230E	TB3 D1R	I-094	0 - 5 VDC	0 - 5	PSIG
35426B-AI-28	S_CC_COIL_SEC_IN_PRESS_SIG	AI	SOUTH COOLING CHAMBER COIL SECONDARY INLET PRESSURE SIGNAL	B1	5	3	PT-111B	35426 - J32	I-097	TB8 +230F	TB3 D1R	I-094	0 - 5 VDC	0 - 5	PSIG
35426B-AI-29	ICPS_CC_COIL_SEC_IN_PRESS_SIG	AI	ICPS COOLING CHAMBER COIL SECONDARY INLET PRESSURE SIGNAL	B1	5	4	PT-121B	35426 - J42	I-097	TB8 +230G	TB3 D1R	I-094	0 - 5 VDC	0 - 5	PSIG
35426B-AI-30		AI		B1	5	5									
1756-IR6I RTD INPUT MODULE															
35426B-AI-31	WG_TANK_SEC_TEMP_SIG	AI	WATER GLYCOL TANK SECONDARY TEMPERATURE SIGNAL	B1	6	0	TE-506B	35426 - J20	I-086	I/O CHAN	I/O CHAN	-	4-WIRE RTD	25 - 100	DEG F
35426B-AI-32	CT_CW_SEC_TEMP_SIG	AI	COOLING TOWER COOLING WATER SECONDARY TEMPERATURE SIGNAL	B1	6	1	TE-414B	35426 - J15	I-086	I/O CHAN	I/O CHAN	-	4-WIRE RTD	25 - 100	DEG F
35426B-AI-33		AI		B1	6	2									
35426B-AI-34		AI		B1	6	3									
35426B-AI-35		AI		B1	6	4									
35426B-AI-36		AI		B1	6	5									
1756-IR6I RTD INPUT MODULE															
35426B-AI-37	N_CC_CCOIL_SEC_TEMP_SIG	AI	NORTH COOLING CHAMBER COLD COIL SECONDARY TEMPERATURE SIGNAL	B1	7	0	TE-103B	35426 - J48	I-086	I/O CHAN	I/O CHAN	-	4-WIRE RTD	25 - 100	DEG F
35426B-AI-38	N_CC_PCOOL_SEC_TEMP_SIG	AI	NORTH COOLING CHAMBER PRECOOL COIL SECONDARY TEMPERATURE SIGNAL	B1	7	1	TE-102B	35426 - J49	I-086	I/O CHAN	I/O CHAN	-	4-WIRE RTD	50 - 200	DEG F
35426B-AI-39	S_CC_CCOIL_PRI_TEMP_SIG	AI	SOUTH COOLING CHAMBER COLD COIL PRIMARY TEMPERATURE SIGNAL	B1	7	2	TE-113A	35426 - J35	I-086	I/O CHAN	I/O CHAN	-	4-WIRE RTD	25 - 100	DEG F
35426B-AI-40	S_CC_PCOOL_PRI_TEMP_SIG	AI	SOUTH COOLING CHAMBER PRECOOL COIL PRIMARY TEMPERATURE SIGNAL	B1	7	3	TE-112A	35426 - J36	I-086	I/O CHAN	I/O CHAN	-	4-WIRE RTD	50 - 200	DEG F
35426B-AI-41	ICPS_CC_CCOIL_SEC_TEMP_SIG	AI	ICPS COOLING CHAMBER COLD COIL SECONDARY TEMPERATURE SIGNAL	B1	7	4	TE-123B	35426 - J44	I-086	I/O CHAN	I/O CHAN	-	4-WIRE RTD	25 - 100	DEG F
35426B-AI-42	ICPS_CC_PCOOL_SEC_TEMP_SIG	AI	ICPS COOLING CHAMBER PRECOOL COIL SECONDARY TEMPERATURE SIGNAL	B1	7	5	TE-122B	35426 - J46	I-086	I/O CHAN	I/O CHAN	-	4-WIRE RTD	50 - 200	DEG F
1756-OF8 VOLTAGE/CURRENT ANALOG OUTPUT MODULE															
35426B-AO-1		AO		B1	8	0									
35426B-AO-2		AO		B1	8	1									
35426B-AO-3	CT_BYPASS_SEC_OUT_ADJ	AO	COOLING TOWER BYPASS VALVE SECONDARY OUTPUT ADJUSTMENT	B1	8	2	FCV-415	35426 - J65	I-088	I/O CHAN	I/O CHAN	-	4 - 20mA	0 - 100	% OPEN
35426B-AO-4		AO		B1	8	3									
35426B-AO-5		AO		B1	8	4									
35426B-AO-6		AO		B1	8	5									
35426B-AO-7	CH123_SEC_CTL_OUT_ADJ	AO	CHILLERS 1, 2, AND 3 SECONDARY CONTROL OUTPUT ADJUSTMENT	B1	8	6	CH-1, CH-2, CH-3	35426 - J57, J58, J59	I-080	I/O CHAN	I/O CHAN	-	0-10 VDC	0 - 100	% LOAD
35426B-AO-8		AO		B1	8	7									
1756-IB16D DC (10-30V) ISOLATED INPUT MODULE															
35426B-DI-1	35426_D220_ON_IND	DI	35426 - D220 INSTRUMENT BUS POWER ON INDICATION	B1	9	0	TB8 +D220	N/A	I-093	TB8 +D220	TB3 D1R	I-093	10 -30 VDC	PWR ON/ PWR OFF	-
35426B-DI-2	35426_D221_ON_IND	DI	35426 - D221 INSTRUMENT BUS POWER ON INDICATION	B1	9	1	TB9 +D221	N/A	I-093	TB9 +D221	TB3 D1R	I-093	10 -30 VDC	PWR ON/ PWR OFF	-
35426B-DI-3		DI		B1	9	2									
35426B-DI-4		DI		B1	9	3									
35426B-DI-5		DI		B1	9	4									
35426B-DI-6		DI		B1	9	5									
35426B-DI-7		DI		B1	9	6									
35426B-DI-8		DI		B1	9	7									
35426B-DI-9		DI		B1	9	8									
35426B-DI-10		DI		B1	9	9									
35426B-DI-11		DI		B1	9	10									
35426B-DI-12		DI		B1	9	11									
35426B-DI-13		DI		B1	9	12									
35426B-DI-14		DI		B1	9	13									
35426B-DI-15		DI		B1	9	14									
35426B-DI-16		DI		B1	9	15									

NOTES:

1. ALL CELLS MARKED TBD SHALL BE DETERMINED BY THE CONTRACTOR AFTER FINAL EQUIPMENT SELECTION.
2. ALL BLANK ROWS ARE SPARE I/O POINTS.
3. REFERENCE SHEET I-043 FOR ENCLOSURE 35426 CONTROLS ONE-LINES.
4. THE CONTRACTOR SHALL MODIFY THE EXISTING KGCS SOFTWARE AND PLC CONFIGURATION FOR USE IN THE CONTRACTOR PROVIDED REDUNDANT PLC SYSTEM IN ACCORDANCE WITH THE TAG INDEX TABLE ON THIS SHEET AND THE SEQUENCE OF OPERATIONS ON SHEETS I-102 THROUGH I-104.

SYM	ZONE	DESCRIPTION	DATE	APPROVED
REVISIONS				

JACOBS
Jacobs Technology Inc.

SIGNATURES		DATE
DRAWN	M. HENNIGH	3/07/14
CHECKED	J. WHITEFORD	3/07/14
SUBMITTED	S. RITTER	3/07/14
ST OF LICENSURE: TN LICENSE NO: 00110556		
APPROVED	G. WARD	3/07/14
	S. HUNT	3/07/14

NATIONAL AERONAUTICS AND SPACE ADMINISTRATION
JOHN F. KENNEDY SPACE CENTER, NASA
KENNEDY SPACE CENTER, FLORIDA

KSC LAUNCH PAD 39-B
ENVIRONMENTAL CONTROL SYSTEM (ECS) REFURBISHMENT
INSTRUMENTATION
ECS LP SYSTEM A1/B1 CHASSIS 35426
TAG INDEX SHEET 3

FILE NO.	SIZE	DWG.NO.	REV
	F	79K39602	
PCN. NO. 98898		SHEET 124 OF 187	

I-041

ECS RIO CABINET 35426 SYSTEM B1 (CONTINUED FROM SHEET I-041)

IDENT	TAG NAME	I/O TYPE	DESCRIPTION	RACK	SLOT	CH	DEVICE TAG	ENCLOSURE INTERFACE CONNECTOR	DEVICE REFERENCE SCHEMATIC	POWER SOURCE/BUS	POWER RETURN/ NEUTRAL	POWER REFERENCE SCHEMATIC	SIGNAL TYPE	SENSOR RANGE	UNITS
1756-IB16D DC (10-30V) ISOLATED INPUT MODULE															
35426B-DI-17		DI		B1	10	0									
35426B-DI-18		DI		B1	10	1									
35426B-DI-19		DI		B1	10	2									
35426B-DI-20		DI		B1	10	3									
35426B-DI-21	WG_P2_PRESS_SW_IND	DI	WATER GLYCOL PUMP2 PRESSURE SWITCH INDICATION	B1	10	4	PS-514	35426 - J18	I-084	TB8 +D230H	TB3 D1R	I-094	10 -30 VDC	ON AT 60 PSI	-
35426B-DI-22		DI		B1	10	5									
35426B-DI-23		DI		B1	10	6									
35426B-DI-24		DI		B1	10	7									
35426B-DI-25		DI		B1	10	8									
35426B-DI-26		DI		B1	10	9									
35426B-DI-27		DI		B1	10	10									
35426B-DI-28		DI		B1	10	11									
35426B-DI-29		DI		B1	10	12									
35426B-DI-30		DI		B1	10	13									
35426B-DI-31		DI		B1	10	14									
35426B-DI-32		DI		B1	10	15									
1756-OX8I AC(10-265V) / DC(5-150V) ISOLATED RELAY MODULE															
35426B-DO-1		DO		B1	11	0									
35426B-DO-2		DO		B1	11	1									
35426B-DO-3	CT_BYPASS_POS_SEC_SEL_CMD	DO	COOLING TOWER BYPASS POSITIVE SECONDARY SELECT COMMAND	B1	11	2	FCV-415	35426 - J65	I-088	N/A	N/A	-	1 N.O./1 N.C.	A1 SELECT / B1 SELECT	-
35426B-DO-4	CT_BYPASS_NEG_SEC_SEL_CMD	DO	COOLING TOWER BYPASS NEGATIVE SECONDARY SELECT COMMAND	B1	11	3	FCV-415	35426 - J65	I-088	N/A	N/A	-	1 N.O./1 N.C.	A1 SELECT / B1 SELECT	-
35426B-DO-5		DO		B1	11	4									
35426B-DO-6		DO		B1	11	5									
35426B-DO-7	CH123_POS_SEC_SEL_CMD	DO	CHILLERS 1, 2, AND 3 POSITIVE SECONDARY SELECT COMMAND	B1	11	6	CH-1, CH-2, CH-3	35426 - J57, J58, J59	I-080	N/A	N/A	-	1 N.O./1 N.C.	A1 SELECT / B1 SELECT	-
35426B-DO-8	CH123_NEG_SEC_SEL_CMD	DO	CHILLERS 1, 2, AND 3 NEGATIVE SECONDARY SELECT COMMAND	B1	11	7	CH-1, CH-2, CH-3	35426 - J57, J58, J59	I-080	N/A	N/A	-	1 N.O./1 N.C.	A1 SELECT / B1 SELECT	-
1756-OB8EI DC (10-30V) ELECTRONICALLY FUSED ISOLATED OUTPUT MODULE															
35426B-DO-9	35426_D220_ON_CMD	DO	35426 - D220 INSTRUMENT BUS POWER ON COMMAND	B1	13	0	K3	N/A	I-093	TB2 +D210	TB3 D1R	I-093	10 - 30 VDC	PWR ON/ PWR OFF	-
35426B-DO-10	35426_D221_ON_CMD	DO	35426 - D221 COMMAND BUS POWER ON COMMAND	B1	13	1	K4	N/A	I-093	TB2 +D210	TB3 D1R	I-093	10 - 30 VDC	PWR ON/ PWR OFF	-
35426B-DO-11		DO		B1	13	2									
35426B-DO-12		DO		B1	13	3									
35426B-DO-13		DO		B1	13	4									
35426B-DO-14		DO		B1	13	5									
35426B-DO-15		DO		B1	13	6									
35426B-DO-16		DO		B1	13	7									
1756-OB8EI DC (10-30V) ELECTRONICALLY FUSED ISOLATED OUTPUT MODULE															
35426B-DO-17	35426_D230A_ON_CMD	DO	35426 - D230A INSTRUMENT BUS POWER ON COMMAND	B1	14	0	TB8 +D230A	N/A	I-094	TB8 +D220	TB3 D1R	I-094	10 - 30 VDC	PWR ON/ PWR OFF	-
35426B-DO-18	35426_D230B_ON_CMD	DO	35426 - D230B INSTRUMENT BUS POWER ON COMMAND	B1	14	1	TB8 +D230B	N/A	I-094	TB8 +D220	TB3 D1R	I-094	10 - 30 VDC	PWR ON/ PWR OFF	-
35426B-DO-19	35426_D230C_ON_CMD	DO	35426 - D230C INSTRUMENT BUS POWER ON COMMAND	B1	14	2	TB8 +D230C	N/A	I-094	TB8 +D220	TB3 D1R	I-094	10 - 30 VDC	PWR ON/ PWR OFF	-
35426B-DO-20	35426_D230D_ON_CMD	DO	35426 - D230D INSTRUMENT BUS POWER ON COMMAND	B1	14	3	TB8 +D230D	N/A	I-094	TB8 +D220	TB3 D1R	I-094	10 - 30 VDC	PWR ON/ PWR OFF	-
35426B-DO-21	35426_D230E_ON_CMD	DO	35426 - D230E INSTRUMENT BUS POWER ON COMMAND	B1	14	4	TB8 +D230E	N/A	I-094	TB8 +D220	TB3 D1R	I-094	10 - 30 VDC	PWR ON/ PWR OFF	-
35426B-DO-22	35426_D230F_ON_CMD	DO	35426 - D230F INSTRUMENT BUS POWER ON COMMAND	B1	14	5	TB8 +D230F	N/A	I-094	TB8 +D220	TB3 D1R	I-094	10 - 30 VDC	PWR ON/ PWR OFF	-
35426B-DO-23	35426_D230G_ON_CMD	DO	35426 - D230G INSTRUMENT BUS POWER ON COMMAND	B1	14	6	TB8 +D230G	N/A	I-094	TB8 +D220	TB3 D1R	I-094	10 - 30 VDC	PWR ON/ PWR OFF	-
35426B-DO-24	35426_D230H_ON_CMD	DO	35426 - D230H INSTRUMENT BUS POWER ON COMMAND	B1	14	7	TB8 +D230H	N/A	I-094	TB8 +D220	TB3 D1R	I-094	10 - 30 VDC	PWR ON/ PWR OFF	-
1756-OB8EI DC (10-30V) ELECTRONICALLY FUSED ISOLATED OUTPUT MODULE															
35426B-DO-25	35426_D231A_ON_CMD	DO	35426 - D231A COMMAND BUS POWER ON COMMAND	B1	15	0	TB9 +D231A	N/A	I-094	TB9 +D221	TB3 D1R	I-094	10 - 30 VDC	PWR ON/ PWR OFF	-
35426B-DO-26	35426_D231B_ON_CMD	DO	35426 - D231B COMMAND BUS POWER ON COMMAND	B1	15	1	TB9 +D231B	N/A	I-094	TB9 +D221	TB3 D1R	I-094	10 - 30 VDC	PWR ON/ PWR OFF	-
35426B-DO-27	35426_D231C_ON_CMD	DO	35426 - D231C COMMAND BUS POWER ON COMMAND	B1	15	2	TB9 +D231C	N/A	I-094	TB9 +D221	TB3 D1R	I-094	10 - 30 VDC	PWR ON/ PWR OFF	-
35426B-DO-28	35426_D231D_ON_CMD	DO	35426 - D231D COMMAND BUS POWER ON COMMAND	B1	15	3	TB9 +D231D	N/A	I-094	TB9 +D221	TB3 D1R	I-094	10 - 30 VDC	PWR ON/ PWR OFF	-
35426B-DO-29	35426_D231E_ON_CMD	DO	35426 - D231E COMMAND BUS POWER ON COMMAND	B1	15	4	TB9 +D231E	N/A	I-094	TB9 +D221	TB3 D1R	I-094	10 - 30 VDC	PWR ON/ PWR OFF	-
35426B-DO-30	35426_D231F_ON_CMD	DO	35426 - D231F COMMAND BUS POWER ON COMMAND	B1	15	5	TB9 +D231F	N/A	I-094	TB9 +D221	TB3 D1R	I-094	10 - 30 VDC	PWR ON/ PWR OFF	-
35426B-DO-31	35426_D231G_ON_CMD	DO	35426 - D231G COMMAND BUS POWER ON COMMAND	B1	15	6	TB9 +D231G	N/A	I-094	TB9 +D221	TB3 D1R	I-094	10 - 30 VDC	PWR ON/ PWR OFF	-
35426B-DO-32	35426_D231H_ON_CMD	DO	35426 - D231H COMMAND BUS POWER ON COMMAND	B1	15	7	TB9 +D231H	N/A	I-094	TB9 +D221	TB3 D1R	I-094	10 - 30 VDC	PWR ON/ PWR OFF	-
1756-OB8EI DC (10-30V) ELECTRONICALLY FUSED ISOLATED OUTPUT MODULE															
35426B-DO-33	CS_FS_SOV214B_OPN_CMD	DO	DUCT CS/FS HUMIDITY SOLENOID ISOLATION VALVE SOV-214B OPEN COMMAND	B1	16	0	SOV-214B	35426 - J22	I-089	TB9 +D221B	TB3 D1R	I-094	10 - 30 VDC	OPEN/DON'T OPEN	-
35426B-DO-34	SM_SOV224B_OPN_CMD	DO	DUCT SM HUMIDITY SOLENOID ISOLATION VALVE SOV-224B OPEN COMMAND	B1	16	1	SOV-224B	35426 - J24	I-089	TB9 +D221C	TB3 D1R	I-094	10 - 30 VDC	OPEN/DON'T OPEN	-
35426B-DO-35	CS_AFT_SOV234B_OPN_CMD	DO	DUCT CS/AFT HUMIDITY SOLENOID ISOLATION VALVE SOV-234B OPEN COMMAND	B1	16	2	SOV-234B	35426 - J29	I-089	TB9 +D221D	TB3 D1R	I-094	10 - 30 VDC	OPEN/DON'T OPEN	-
35426B-DO-36		DO		B1	16	3									
35426B-DO-37		DO		B1	16	4									
35426B-DO-38		DO		B1	16	5									
35426B-DO-39		DO		B1	16	6									
35426B-DO-40		DO		B1	16	7									

NOTES:

1. ALL CELLS MARKED TBD SHALL BE DETERMINED BY THE CONTRACTOR AFTER FINAL EQUIPMENT SELECTION.
2. ALL BLANK ROWS ARE SPARE I/O POINTS.
3. REFERENCE SHEET I-043 FOR ENCLOSURE 35426 CONTROLS ONE-LINES.
4. THE CONTRACTOR SHALL MODIFY THE EXISTING KGCS SOFTWARE AND PLC CONFIGURATION FOR USE IN THE CONTRACTOR PROVIDED REDUNDANT PLC SYSTEM IN ACCORDANCE WITH THE TAG INDEX TABLE ON THIS SHEET AND THE SEQUENCE OF OPERATIONS ON SHEETS I-102 THROUGH I-104.

SYM	ZONE	DESCRIPTION	DATE	APPROVED
REVISIONS				

JACOBS
Jacobs Technology Inc.

SIGNATURES		DATE
DRAWN	M. HENNIGH	3/07/14
CHECKED	J. WHITEFORD	3/07/14
SUBMITTED	S. RITTER	3/07/14
ST OF LICENSURE: TN LICENSE NO: 00110556		
APPROVED	G. WARD	3/07/14
	S. HUNT	3/07/14

NATIONAL AERONAUTICS AND SPACE ADMINISTRATION
JOHN F. KENNEDY SPACE CENTER, NASA
KENNEDY SPACE CENTER, FLORIDA

KSC LAUNCH PAD 39-B
ENVIRONMENTAL CONTROL SYSTEM (ECS) REFURBISHMENT
INSTRUMENTATION
ECS LP SYSTEM A1/B1 CHASSIS 35426
TAG INDEX SHEET 4

FILE NO.	SIZE	DWG.NO.	REV
	F	79K39602	
PCN. NO. 98898		SHEET 125 OF 187	

I-042

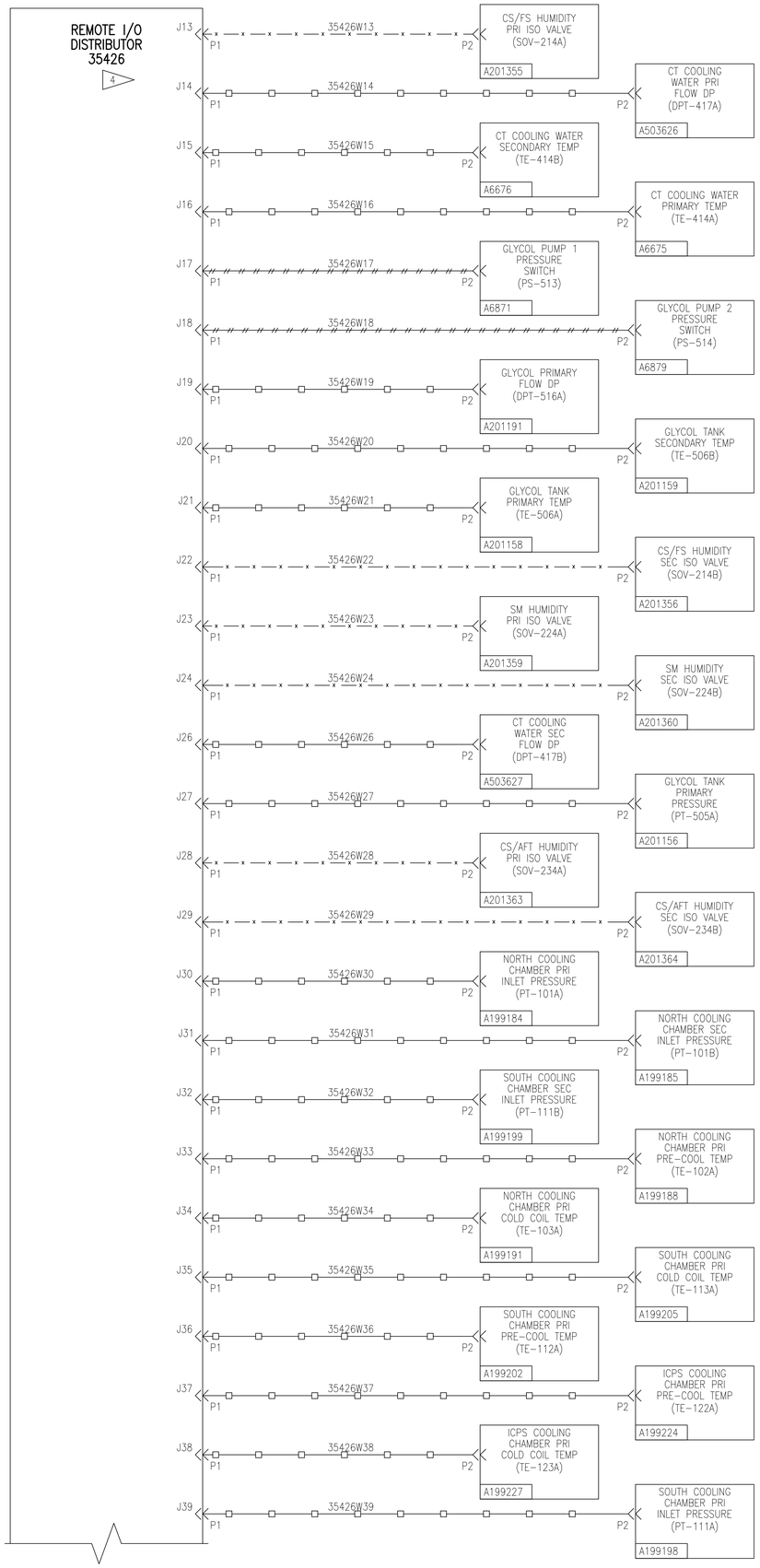

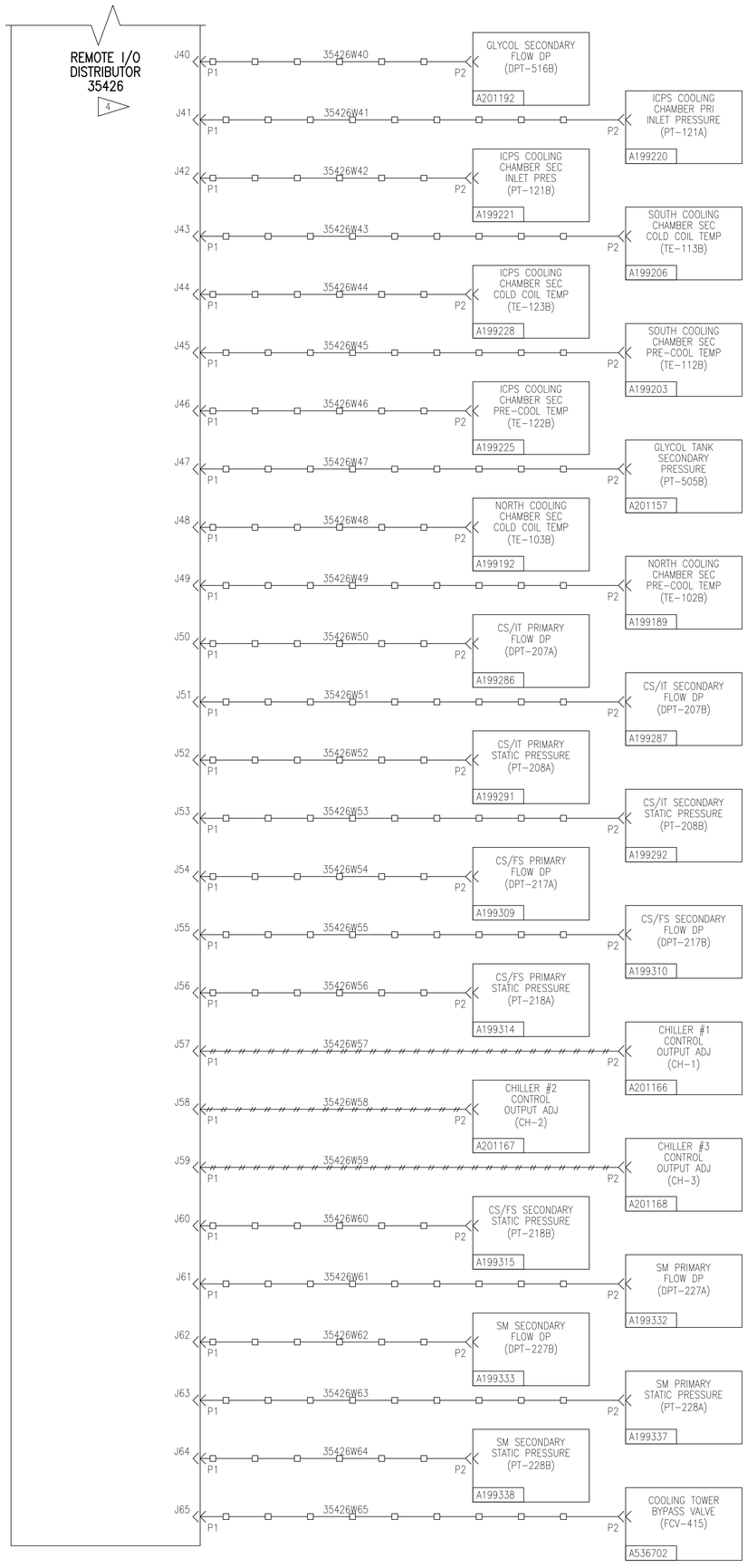

NOTES:

1. THE CONTRACTOR SHALL ADHERE TO THE FOLLOWING SPECIFICATIONS FOR ACCEPTABLE CABLE AND CONNECTOR TYPES, FABRICATION, AND INSTALLATION:
   - KSC-E-165
   - KSC-E-166
   - SSPC SP-1 GUIDELINES
   - NASA-STD-5008 (LATEST VERSION)
   - MIL-DTL-5541
   - 120E3100001 (HEAVY DUTY CABLE SPECIFICATION, GENERAL)
   - 120E3100003 (ELECTRICAL CABLE FABRICATION REQUIREMENTS)
2. THIS ONE-LINE DEPICTS FINAL CONNECTOR AND CABLING ARRANGEMENT AFTER THE REMOTE I/O CONNECTORS AND CABLING HAVE BEEN MODIFIED.
3. REFERENCE SHEETS I-014 AND I-015 FOR 28VDC POWER AND CONTROLNET CONNECTORS AND CABLING DETAILS.
4. UNLESS OTHERWISE NOTED EXISTING REMOTE I/O ENCLOSURE CABLES W13 THROUGH W59 SHALL BE REMOVED. THESE CABLES SHALL BE CAREFULLY COILED AND SAVED. THE CONTRACTOR MAY ELECT TO REUSE THESE CABLES. IN PLACE OF NEW CABLES FOR SIGNALS DESCRIBED IN ANY OF THE ONE-LINES CONTAINED WITHIN THE INSTRUMENTATION DRAWINGS. ALL CABLES THAT THE CONTRACTOR DECIDES TO REUSE MUST BE APPROVED BY THE NASA CONTRACTING OFFICER.
5. UNLESS OTHERWISE SPECIFIED ALL CABLING SHOWN ON THIS SHEET SHALL BE NEW. THESE CABLES SHALL BE PROVIDED BY AND INSTALLED BY THE CONTRACTOR.
6. REFERENCE SHEET I-101 FOR ADDITIONAL CABLE SPECIFICATION AND FABRICATION DETAILS.
7. REFERENCE NASA DOCUMENT 120E3100001, "SPECIFICATION FOR HEAVY DUTY GSE CABLE, GENERAL". ALL CABLES USED FOR THE INTERCONNECTION OF ECS EQUIPMENT AND ENCLOSURES SHALL CONFORM TO THESE SPECIFICATIONS.
8. REFERENCE APPENDIX A OF DOCUMENT 120E3100001 FOR INDIVIDUAL CABLE SPECIFICATIONS.

7 8 CABLE SPECIFICATION TABLE

LINE SYMBOL	CABLE SPECIFICATION
—□—□—□—	120E3100001-001
—//—//—//—//—	120E3100001-004
— — — — — — —	120E3100001-051
—x—x—x—x—x—	120E3100001-006

SYM	ZONE	DESCRIPTION	DATE	APPROVED
REVISIONS				

JACOBS
Jacobs Technology Inc.

SIGNATURES		DATE
DRAWN	M. HENNIGH	3/07/14
CHECKED	J. WHITEFORD	3/07/14
SUBMITTED	S. RITTER	3/07/14
ST OF LICENSURE: TN LICENSE NO: 00110556		
APPROVED	G. WARD	3/07/14
	S. HUNT	3/07/14

NATIONAL AERONAUTICS AND SPACE ADMINISTRATION
JOHN F. KENNEDY SPACE CENTER, NASA
KENNEDY SPACE CENTER, FLORIDA

KSC LAUNCH PAD 39-B
ENVIRONMENTAL CONTROL SYSTEM (ECS) REFURBISHMENT
INSTRUMENTATION
ECS LP SYSTEM A1/B1 CHASSIS 35426
CONTROLS ONE-LINE

I-043

FILE NO.	SIZE	DWG.NO.	REV
	F	79K39602	
PCN. NO. 98898		SHEET 126 OF 187	

P:\95452\DRAWINGS\INSTWJ-043.DWG
11-DEC-2013 13:25
HARDYDR

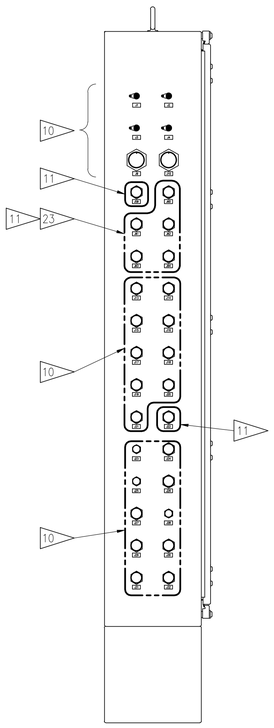

LEFT SIDE VIEW

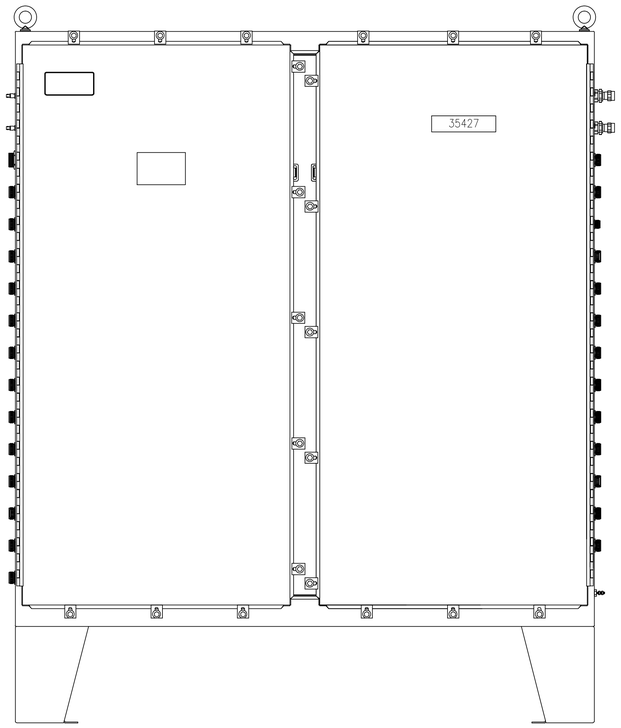

FRONT VIEW

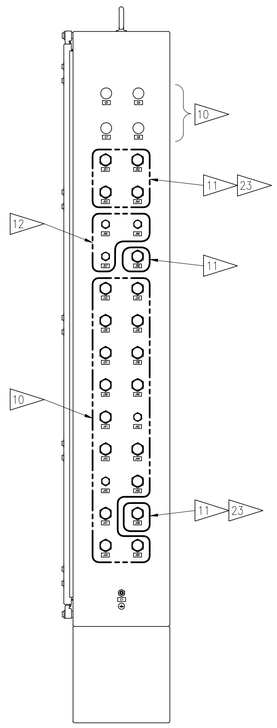

RIGHT SIDE VIEW

DETAIL 1
CONNECTOR MODIFICATIONS 15

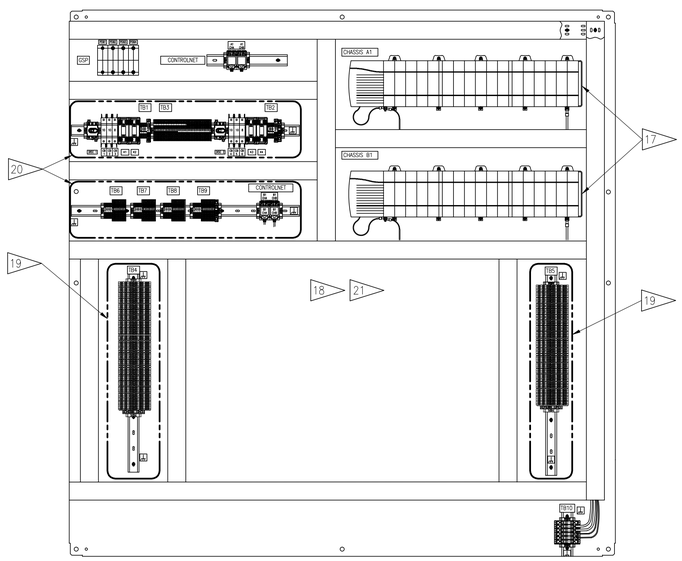

DETAIL 2
RIO ENCLOSURE MODIFICATIONS

DEMO & MODIFICATIONS NOTES:

GENERAL:

1. THIS SHEET DETAILS ALL OF THE CONNECTORS AND EQUIPMENT MODIFICATIONS REQUIRED FOR REMOTE I/O ENCLOSURE 35427.
2. CONTRACTOR SHALL BE RESPONSIBLE FOR ALL DEMOLITION, MODIFICATION, AND NEW EQUIPMENT INSTALLATION DETAILED ON SHEETS I-044 THROUGH I-050 FOR REMOTE I/O ENCLOSURE 35427.
3. UNLESS OTHERWISE SPECIFIED, FABRICATION/MODIFICATION OF ELECTRICAL GROUND SUPPORT EQUIPMENT SHALL BE IN ACCORDANCE WITH KSC-E-165 AND KSC-E-166.
4. UNLESS OTHERWISE SPECIFIED ALL WIRING, TERMINAL BLOCKS, AND ADDITIONAL EQUIPMENT SUPPLIED BY THE CONTRACTOR SHALL BE OF THE SAME TYPE AND MANUFACTURER AS CURRENTLY USED IN REMOTE I/O ENCLOSURE 35427.
5. ALL NEW EQUIPMENT SUPPLIED BY THE CONTRACTOR, AND USED FOR THE MODIFICATION OF REMOTE I/O ENCLOSURE 35427, SHALL BE APPROVED BY THE NASA CONTRACTING OFFICER BEFORE USE.
6. REFERENCE SHEET I-050 FOR CABLE ROUTING DETAILS BETWEEN REMOTE I/O ENCLOSURE 35427 AND FIELD DEVICES.

EXECUTION:

7. CONTRACTOR SHALL PROVIDE DETAILED DRAWINGS OF MODIFIED ENCLOSURES, DEVICE TERMINATIONS, AND WIRING.
8. NASA SHALL PROVIDE DRAWINGS OF EXISTING ENCLOSURE 35427 AFTER THE CONTRACT HAS BEEN AWARDED.
9. THE CONTRACTOR SHALL DETERMINE IF THE EXISTING REMOTE I/O ENCLOSURE 35427 SHALL BE MODIFIED IN THE FIELD OR REMOVED FROM THE SITE TO BE MODIFIED AT THE CONTRACTORS FABRICATION SHOP. FIELD MODIFICATION OR REMOVAL SHALL BE APPROVED BY THE NASA CONTRACTING OFFICER.

ENCLOSURE CONNECTORS:

10. CONNECTORS J1 THROUGH J10, J13 THROUGH J21, J23 THROUGH J47, J49, AND J50 SHALL REMAIN AS IS AND DO NOT REQUIRE DEMOLITION OR MODIFICATION.
11. THE CONTRACTOR SHALL SUPPLY AND INSTALL NEW CONNECTORS J22, J48, J51 THROUGH J54, AND J58 THROUGH J64. THESE CONNECTORS ARE JAM NUT RECEPTACLES OF TYPE D38999/24SE8SN.
12. THE CONTRACTOR SHALL SUPPLY AND INSTALL NEW CONNECTORS J55 THROUGH J57. THESE CONNECTORS ARE JAM NUT RECEPTACLES OF TYPE D38999/24SB2SN.
13. ALL CONNECTORS REQUIRE SAFETY WIRE IN ACCORDANCE WITH AIA/NAS NASM33540. SAFETY WIRE MATERIAL SHALL BE PER AIA/NAS NASM20995 TYPE C (SST).
14. THE CONTRACTOR SHALL INSTALL AND POT ALL CONNECTORS IN ACCORDANCE WITH MIL-DTL-38999 AND KSC-STD-132.
15. THE CONTRACTOR SHALL SUPPLY AND INSTALL DUST-CAPS FOR ALL SPARE AND UNUSED CONNECTORS.
16. REFERENCE CONNECTOR ALLOCATION TABLE ON SHEET I-045 FOR CONNECTOR DETAILS.

PLC MODULES:

17. THERE ARE NO PLC MODULE CHANGES REQUIRED FOR REMOTE I/O ENCLOSURE 35427.

ENCLOSURE WIRING:

18. CONTRACTOR SHALL USE SHEETS I-044 THROUGH I-050 AND I-075 THROUGH I-101 TO VERIFY AND/OR MODIFY:
    - ALL 28VDC DISTRIBUTION WIRING.
    - ALL WIRING BETWEEN PLC AND FIELD INTERFACE TERMINAL BLOCKS.
    - ALL WIRING BETWEEN ENCLOSURE CONNECTORS AND FIELD INTERFACE TERMINAL BLOCKS.
19. CONTRACTOR SHALL SUPPLY AND INSTALL ANY ADDITIONAL FIELD INTERFACE TERMINAL BLOCKS REQUIRED TO TERMINATE ALL SIGNALS AND WIRING BETWEEN PLC'S AND ENCLOSURE INTERFACE CONNECTORS.
20. CONTRACTOR SHALL SUPPLY AND INSTALL ANY ADDITIONAL POWER TERMINAL BLOCKS REQUIRED TO CONNECT THE 28VDC SUPPLY TO THE PLC'S, FIELD INTERFACE TERMINAL BLOCKS, AND/OR ENCLOSURE INTERFACE CONNECTORS.
21. CONTRACTOR SHALL SUPPLY AND INSTALL ANY ADDITIONAL ENCLOSURE WIRING REQUIRED TO CONNECT ALL SIGNALS BETWEEN PLC'S AND ENCLOSURE INTERFACE CONNECTORS.
22. ALL WIRING FROM ENCLOSURE INTERFACE CONNECTORS SHALL BE LANDED ON THE FIELD INTERFACE TERMINAL BLOCKS BEFORE TERMINATING TO THE PLC OR OTHER INTERNAL ENCLOSURE DEVICES.

SPARE DUCT OPTION:

23. IF SPARE DUCT OPTION IS INSTALLED, THE CONTRACTOR SHALL SUPPLY AND INSTALL ALL CABLES AND CONNECTORS TO CONNECT FIELD DEVICES TO ENCLOSURE CONNECTORS J48, J53, J54, AND J60 THROUGH J64, AND THE CONTRACTOR WILL NOT HAVE TO SUPPLY PROTECTIVE DUST CAPS. REFERENCE SHEET I-045.

SYM	ZONE	DESCRIPTION	DATE	APPROVED
REVISIONS				

JACOBS
Jacobs Technology Inc.

SIGNATURES		DATE
DRAWN	M. HENNIGH	3/07/14
CHECKED	J. WHITEFORD	3/07/14
SUBMITTED	S. RITTER	3/07/14
ST OF LICENSURE: TN LICENSE NO: 00110556		
APPROVED	G. WARD	3/07/14
	S. HUNT	3/07/14

NATIONAL AERONAUTICS AND SPACE ADMINISTRATION
JOHN F. KENNEDY SPACE CENTER, NASA
KENNEDY SPACE CENTER, FLORIDA

KSC LAUNCH PAD 39-B
ENVIRONMENTAL CONTROL SYSTEM (ECS) REFURBISHMENT
INSTRUMENTATION
ECS LP SYSTEM A1/B1 CHASSIS 35427
DEMOLITION & MODIFICATION SHEET 1

I-044

FILE NO.	SIZE	DWG.NO.	REV
	F	79K39602	

PCN. NO. 98898 SHEET 127 OF 187

1 ECS RIO CABINET 35427 CONNECTOR ALLOCATION TABLE

ENCLOSURE CONNECTOR	ENCLOSURE CONNECTOR TYPE (JAMNUT RECEPTACLE)	MATING CONNECTOR (PLUG)	DESCRIPTION	DISPOSITION
J1	ADBJ79-E1-UBJ20	PL75	CONTROLNET IN PLC B1 CHA	NO MODIFICATION
J2	ADBJ79-E1-UBJ20	PL75	CONTROLNET IN PLC B1 CHB	NO MODIFICATION
J3	ADBJ79-E1-UBJ20	PL75	CONTROLNET IN PLC A1 CHB	NO MODIFICATION
J4	ADBJ79-E1-UBJ20	PL75	CONTROLNET IN PLC A1 CHA	NO MODIFICATION
J5	ADBJ79-E1-UBJ20	PL75	CONTROLNET IN PLC A1 CHA	NO MODIFICATION
J6	ADBJ79-E1-UBJ20	PL75	CONTROLNET IN PLC A1 CHB	NO MODIFICATION
J7	ADBJ79-E1-UBJ20	PL75	CONTROLNET IN PLC B1 CHA	NO MODIFICATION
J8	ADBJ79-E1-UBJ20	PL75	CONTROLNET IN PLC B1 CHB	NO MODIFICATION
J9	MS3454LS32-1P	MS3456LS32-1S	28VDC POWER INPUT SYSTEM A	NO MODIFICATION
J10	MS3454LS32-1P	MS3456LS32-1S	28VDC POWER INPUT SYSTEM B	NO MODIFICATION
J13	D38999 / 24SE8SN	D38999 / 26SE8PN	CONNECTOR REUSED FOR P411	MODIFY / VERIFY WIRING BACK TO FIELD INTERFACE TERMINAL BLOCKS
J14	D38999 / 24SE8SN	D38999 / 26SE8PN	CONNECTOR REUSED FOR CTF-401	MODIFY / VERIFY WIRING BACK TO FIELD INTERFACE TERMINAL BLOCKS
J15	D38999 / 24SE8SN	D38999 / 26SE8PN	CONNECTOR REUSED FOR CTF-402	MODIFY / VERIFY WIRING BACK TO FIELD INTERFACE TERMINAL BLOCKS
J16	D38999 / 24SE8SN	D38999 / 26SE8PN	CONNECTOR REUSED FOR P-511	MODIFY / VERIFY WIRING BACK TO FIELD INTERFACE TERMINAL BLOCKS
J17	D38999 / 24SE8SN	D38999 / 26SE8PN	CONNECTOR REUSED FOR SCR-221-1	MODIFY / VERIFY WIRING BACK TO FIELD INTERFACE TERMINAL BLOCKS
J18	D38999 / 24SE8SN	D38999 / 26SE8PN	CONNECTOR REUSED FOR SCR-251-1	MODIFY / VERIFY WIRING BACK TO FIELD INTERFACE TERMINAL BLOCKS
J19	D38999 / 24SE8SN	D38999 / 26SE8PN	CONNECTOR REUSED FOR SCR-211-1	MODIFY / VERIFY WIRING BACK TO FIELD INTERFACE TERMINAL BLOCKS
J20	D38999 / 24SE8SN	D38999 / 26SE8PN	CONNECTOR REUSED FOR SCR-261-1	MODIFY / VERIFY WIRING BACK TO FIELD INTERFACE TERMINAL BLOCKS
J21	D38999 / 24SE8SN	D38999 / 26SE8PN	CONNECTOR REUSED FOR SG1 POWER	MODIFY / VERIFY WIRING BACK TO FIELD INTERFACE TERMINAL BLOCKS
J22	D38999 / 24SE8SN	D38999 / 26SE8PN	CONNECTOR REUSED FOR SCR-301-1	PROVIDE AND INSTALL NEW CONNECTOR, WIRING, AND TERMINAL BLOCKS
J23	D38999 / 24SB2SN	D38999 / 26SB2PN	CONNECTOR REUSED FOR SB-003	MODIFY / VERIFY WIRING BACK TO FIELD INTERFACE TERMINAL BLOCKS
J24	D38999 / 24SE8SN	D38999 / 26SE8PN	CONNECTOR REUSED FOR SB-003	MODIFY / VERIFY WIRING BACK TO FIELD INTERFACE TERMINAL BLOCKS
J25	D38999 / 24SB2SN	D38999 / 26SB2PN	CONNECTOR REUSED FOR RB-002	MODIFY / VERIFY WIRING BACK TO FIELD INTERFACE TERMINAL BLOCKS
J26	D38999 / 24SE8SN	D38999 / 26SE8PN	CONNECTOR REUSED FOR RB-002	MODIFY / VERIFY WIRING BACK TO FIELD INTERFACE TERMINAL BLOCKS
J27	D38999 / 24SE8SN	D38999 / 26SE8PN	CONNECTOR REUSED FOR SCR-231-1	MODIFY / VERIFY WIRING BACK TO FIELD INTERFACE TERMINAL BLOCKS
J28	D38999 / 24SB2SN	D38999 / 26SB2PN	CONNECTOR REUSED FOR LB-004	MODIFY / VERIFY WIRING BACK TO FIELD INTERFACE TERMINAL BLOCKS
J29	D38999 / 24SE8SN	D38999 / 26SE8PN	CONNECTOR REUSED FOR LB-004	MODIFY / VERIFY WIRING BACK TO FIELD INTERFACE TERMINAL BLOCKS
J30	D38999 / 24SE8SN	D38999 / 26SE8PN	CONNECTOR REUSED FOR SCR-201-1	MODIFY / VERIFY WIRING BACK TO FIELD INTERFACE TERMINAL BLOCKS
J31	D38999 / 24SE8SN	D38999 / 26SE8PN	CONNECTOR REUSED FOR SCR-271-1	MODIFY / VERIFY WIRING BACK TO FIELD INTERFACE TERMINAL BLOCKS
J32	D38999 / 24SE8SN	D38999 / 26SE8PN	CONNECTOR REUSED FOR PS-416	MODIFY / VERIFY WIRING BACK TO FIELD INTERFACE TERMINAL BLOCKS
J33	D38999 / 24SE8SN	D38999 / 26SE8PN	CONNECTOR REUSED FOR PS-415	MODIFY / VERIFY WIRING BACK TO FIELD INTERFACE TERMINAL BLOCKS
J34	D38999 / 24SE8SN	D38999 / 26SE8PN	CONNECTOR REUSED FOR P-412	MODIFY / VERIFY WIRING BACK TO FIELD INTERFACE TERMINAL BLOCKS
J35	D38999 / 24SE8SN	D38999 / 26SE8PN	CONNECTOR REUSED FOR CTF-403	MODIFY / VERIFY WIRING BACK TO FIELD INTERFACE TERMINAL BLOCKS
J36	D38999 / 24SE8SN	D38999 / 26SE8PN	CONNECTOR REUSED FOR P-512	MODIFY / VERIFY WIRING BACK TO FIELD INTERFACE TERMINAL BLOCKS
J37	D38999 / 24SE8SN	D38999 / 26SE8PN	CONNECTOR REUSED FOR SCR-221-2	MODIFY / VERIFY WIRING BACK TO FIELD INTERFACE TERMINAL BLOCKS
J38	D38999 / 24SE8SN	D38999 / 26SE8PN	CONNECTOR REUSED FOR SCR-301-2	MODIFY / VERIFY WIRING BACK TO FIELD INTERFACE TERMINAL BLOCKS
J39	D38999 / 24SE8SN	D38999 / 26SE8PN	CONNECTOR REUSED FOR SCR-251-2	MODIFY / VERIFY WIRING BACK TO FIELD INTERFACE TERMINAL BLOCKS
J40	D38999 / 24SE8SN	D38999 / 26SE8PN	CONNECTOR REUSED FOR SCR-211-2	MODIFY / VERIFY WIRING BACK TO FIELD INTERFACE TERMINAL BLOCKS
J41	D38999 / 24SE8SN	D38999 / 26SE8PN	CONNECTOR REUSED FOR SG2 POWER	MODIFY / VERIFY WIRING BACK TO FIELD INTERFACE TERMINAL BLOCKS
J42	D38999 / 24SB2SN	D38999 / 26SB2PN	CONNECTOR REUSED FOR NB-001	MODIFY / VERIFY WIRING BACK TO FIELD INTERFACE TERMINAL BLOCKS
J43	D38999 / 24SE8SN	D38999 / 26SE8PN	CONNECTOR REUSED FOR NB-001	MODIFY / VERIFY WIRING BACK TO FIELD INTERFACE TERMINAL BLOCKS
J44	D38999 / 24SE8SN	D38999 / 26SE8PN	CONNECTOR REUSED FOR SCR-231-2	MODIFY / VERIFY WIRING BACK TO FIELD INTERFACE TERMINAL BLOCKS
J45	D38999 / 24SB2SN	D38999 / 26SB2PN	CONNECTOR REUSED FOR LRB-005	MODIFY / VERIFY WIRING BACK TO FIELD INTERFACE TERMINAL BLOCKS
J46	D38999 / 24SE8SN	D38999 / 26SE8PN	CONNECTOR REUSED FOR LRB-005	MODIFY / VERIFY WIRING BACK TO FIELD INTERFACE TERMINAL BLOCKS
J47	D38999 / 24SE8SN	D38999 / 26SE8PN	CONNECTOR REUSED FOR SCR-201-2	MODIFY / VERIFY WIRING BACK TO FIELD INTERFACE TERMINAL BLOCKS
J48	D38999 / 24SE8SN	D38999 / 26SE8PN	RESERVED FOR SCR-241-1 (INSTALL OPTION)	IF OPTION INSTALLED, PROVIDE AND INSTALL NEW CONNECTOR, WIRING, AND TERMINAL BLOCKS OTHERWISE PROVIDE AND INSTALL DUST CAP
J49	D38999 / 24SE8SN	D38999 / 26SE8PN	CONNECTOR REUSED FOR 35755 MCCD UNREG. CTL	MODIFY / VERIFY WIRING BACK TO FIELD INTERFACE TERMINAL BLOCKS
J50	D38999 / 24SE8SN	D38999 / 26SE8PN	CONNECTOR REUSED FOR 35436 MCCB UNREG. CTL	MODIFY / VERIFY WIRING BACK TO FIELD INTERFACE TERMINAL BLOCKS
J51	D38999 / 24SE8SN	D38999 / 26SE8PN	CONNECTOR USED FOR SCR-261-2	PROVIDE AND INSTALL NEW CONNECTOR, WIRING, AND TERMINAL BLOCKS
J52	D38999 / 24SE8SN	D38999 / 26SE8PN	CONNECTOR USED FOR SCR-271-2	PROVIDE AND INSTALL NEW CONNECTOR, WIRING, AND TERMINAL BLOCKS
J53	D38999 / 24SE8SN	D38999 / 26SE8PN	RESERVED FOR SCR-281-1 (INSTALL OPTION)	IF OPTION INSTALLED, PROVIDE AND INSTALL NEW CONNECTOR, WIRING, AND TERMINAL BLOCKS OTHERWISE PROVIDE AND INSTALL DUST CAP
J54	D38999 / 24SE8SN	D38999 / 26SE8PN	RESERVED FOR SCR-291-1 (INSTALL OPTION)	IF OPTION INSTALLED, PROVIDE AND INSTALL NEW CONNECTOR, WIRING, AND TERMINAL BLOCKS OTHERWISE PROVIDE AND INSTALL DUST CAP
J55	D38999 / 24SB2SN	D38999 / 26SB2PN	CONNECTOR USED FOR CTF-401	PROVIDE AND INSTALL NEW CONNECTOR, WIRING, AND TERMINAL BLOCKS
J56	D38999 / 24SB2SN	D38999 / 26SB2PN	CONNECTOR USED FOR CTF-402	PROVIDE AND INSTALL NEW CONNECTOR, WIRING, AND TERMINAL BLOCKS
J57	D38999 / 24SB2SN	D38999 / 26SB2PN	CONNECTOR USED FOR CTF-403	PROVIDE AND INSTALL NEW CONNECTOR, WIRING, AND TERMINAL BLOCKS
J58	D38999 / 24SE8SN	D38999 / 26SE8PN	CONNECTOR USED FOR P-511	PROVIDE AND INSTALL NEW CONNECTOR, WIRING, AND TERMINAL BLOCKS
J59	D38999 / 24SE8SN	D38999 / 26SE8PN	CONNECTOR USED FOR P-512	PROVIDE AND INSTALL NEW CONNECTOR, WIRING, AND TERMINAL BLOCKS
J60	D38999 / 24SE8SN	D38999 / 26SE8PN	RESERVED FOR SCR-281B-1 (INSTALL OPTION)	IF OPTION INSTALLED, PROVIDE AND INSTALL NEW CONNECTOR, WIRING, AND TERMINAL BLOCKS OTHERWISE PROVIDE AND INSTALL DUST CAP
J61	D38999 / 24SE8SN	D38999 / 26SE8PN	RESERVED FOR SCR-291B-1 (INSTALL OPTION)	IF OPTION INSTALLED, PROVIDE AND INSTALL NEW CONNECTOR, WIRING, AND TERMINAL BLOCKS OTHERWISE PROVIDE AND INSTALL DUST CAP
J62	D38999 / 24SE8SN	D38999 / 26SE8PN	RESERVED FOR SCR-311-2 (INSTALL OPTION)	IF OPTION INSTALLED, PROVIDE AND INSTALL NEW CONNECTOR, WIRING, AND TERMINAL BLOCKS OTHERWISE PROVIDE AND INSTALL DUST CAP
J63	D38999 / 24SE8SN	D38999 / 26SE8PN	RESERVED FOR SCR-311-1 (INSTALL OPTION)	IF OPTION INSTALLED, PROVIDE AND INSTALL NEW CONNECTOR, WIRING, AND TERMINAL BLOCKS OTHERWISE PROVIDE AND INSTALL DUST CAP
J64	D38999 / 24SE8SN	D38999 / 26SE8PN	RESERVED FOR SCR-241-2 (INSTALL OPTION)	IF OPTION INSTALLED, PROVIDE AND INSTALL NEW CONNECTOR, WIRING, AND TERMINAL BLOCKS OTHERWISE PROVIDE AND INSTALL DUST CAP

2 RIO CABINET 35427 DC DEVICE POWER SCHEDULE

POWER SYSTEM FEED (A OR B)	MAIN DC POWER BUS	CABINET TB DESIGNATION	SECONDARY DC POWER BUS	CABINET TB DESIGNATION	CABINET INTERFACE CONNECTOR	DEVICE POWERED	REF. SHEET
GSP SYSTEM A	INSTRUMENT POWER BUS +D120	TB-6 (1 THRU 5)	D130A	TB6-6	35427 – J24 35427 – J34 35427 – J20 35427 – J59	SB-003 P-412 SCR-261-1 P-512	I-098 I-084 I-091 I-084
			D130B	TB6-7	35427 – J30 35427 – J49 35427 – J15	SCR-201-1 35755 – K1 CTF-402	I-091 I-095 I-083
			D130C	TB6-8	35427 – J19 35427 – J29 35427 – J32	SCR-211-1 LB-004 PS-416	I-091 I-077 I-084
			D130D	TB6-9	35427 – J46 35427 – J31 35427 – J57 35427 – J48	LRB-005 SCR-271-1 CTF-403 SCR-241-1	I-077 I-091 I-083 I-091
			D130E	TB6-10	35427 – J26 35427 – J21 35427 – J18 35427 – J53	RB-002 35433A3 K1 SCR-251-1 SCR-281-1	I-098 I-092 I-091 I-091
			D130F	TB6-11	35427 – J27 35427 – J36 35427 – J21 35427 – J54	SCR-231-1 P-512 SG1 A3 CM4000 SCR-291-1	I-091 I-084 I-092 I-091
			D130G	TB6-12	35427 – J17 35427 – J21 35427 – J63	SCR-221-1 SG1 A3 MAIN CB SCR-311-1	I-091 I-092 I-091
			D130H	TB6-13	35427 – J43 35427 – J14 35427 – J22	NB-001 CTF-401 SCR-301-1	I-098 I-083 I-091
	CONTROL POWER BUS +D121	TB-7 (1 THRU 5)	D131A	TB7-6	35427 – J34 35427 – J18 35427 – J24	P-412 SCR-251-1 SB-003	I-084 I-091 I-098
			D131B	TB7-7	35427 – J14 35427 – J31 35427 – J26	CTF-401 SCR-271-1 RB-002	I-083 I-091 I-098
			D131C	TB7-8	35427 – J22 35427 – J29 35427 – J48	SCR-301-1 LB-004 SCR-241-1	I-091 I-077 I-091
			D131D	TB7-9	35427 – J15 35427 – J17 35427 – J53	CTF-402 SCR-221-1 SCR-281-1	I-083 I-091 I-091
			D131E	TB7-10	35427 – J35 35427 – J30 35427 – J54	CTF-403 SCR-201-1 SCR-291-1	I-083 I-091 I-091
			D131F	TB7-11	35427 – J36 35427 – J27 35427 – J63	P-512 SCR-231-1 SCR-311-1	I-084 I-091 I-091
			D131G	TB7-12	35427 – J19 35427 – J43	SCR-211-1 NB-001	I-091 I-098
			D131H	TB7-13	35427 – J20 35427 – J49	SCR-261-1 35435 – K1	I-091 I-095
GSP SYSTEM B	INSTRUMENT POWER BUS +D220	TB-8 (1 THRU 5)	D230A	TB8-6	35427 – J29 35427 – J37 35427 – J13	LB-004 SCR-221-2 P-411	I-077 I-091 I-084
			D230B	TB8-7	35427 – J47 35427 – J26 35427 – J32	SCR-201-2 RB-002 P-411	I-091 I-098 I-084
			D230C	TB8-8	35427 – J40 35427 – J33 35427 – J50	SCR-211-2 PS-415 35435 – K1	I-091 I-084 I-095
			D230D	TB8-9	35427 – J56 35427 – J46 35427 – J39 35427 – J64	CTF-402 LRB-005 SCR-251-2 SCR-241-2	I-083 I-077 I-091 I-091
			D230E	TB8-10	35427 – J41 35427 – J51 35427 – J58 35427 – J60	35434 – K1 SCR-261-2 P-511 SCR-281-2	I-092 I-091 I-084 I-091
			D230F	TB8-11	35427 – J44 35427 – J16 35427 – J41 35427 – J61	SCR-231-2 P-511 SG2 A3 CM4000 SCR-291-2	I-091 I-084 I-092 I-091
			D230G	TB8-12	35427 – J41 35427 – J38 35427 – J55 35427 – J62	SG2 A3 MAIN CB SCR-301-2 CTF-401 SCR-311-2	I-092 I-091 I-083 I-091
			D230H	TB8-13	35427 – J52 35427 – J35	SCR-271-2 CTF-403	I-091 I-083
	CONTROL POWER BUS +D221	TB-9 (1 THRU 5)	D231A	TB9-6	35427 – J13 35427 – J51 35427 – J24	P-411 SCR-261-2 SB-003	I-084 I-091 I-098
			D231B	TB9-7	35427 – J14 35427 – J39 35427 – J26	CTF-401 SCR-251-2 RB-002	I-083 I-091 I-098
			D231C	TB9-8	35427 – J37	SCR-221-2	I-091
			D231D	TB9-9	35427 – J38 35427 – J15 35427 – J46	SCR-301-2 CTF-402 LRB-005	I-091 I-083 I-077
			D231E	TB9-10	35427 – J35 35427 – J47 35427 – J64	CTF-403 SCR-201-2 SCR-241-2	I-083 I-091 I-091
			D231F	TB9-11	35427 – J16 35427 – J44 35427 – J60	P-511 SCR-231-2 SCR-281-2	I-084 I-091 I-091
			D231G	TB9-12	35427 – J40 35427 – J43 35427 – J61	SCR-211-2 NB-001 SCR-291-2	I-091 I-098 I-091
			D231H	TB9-13	35427 – J50 35427 – J52 35427 – J62	35436 – K1 SCR-271-2 SCR-311-2	I-095 I-091 I-091

DEMO & MODIFICATION NOTES:

GENERAL:

1. THE CONNECTOR ALLOCATION TABLE DETAILS CONNECTOR TYPES AND EQUIPMENT INTERCONNECTIONS.
2. THIS 28VDC DISTRIBUTION TABLE DETAILS ALL DEVICES, CONNECTIONS TO REMOTE I/O ENCLOSURE 35427, WHICH REQUIRE 28VDC SOURCE POWER.

SYM	ZONE	DESCRIPTION	DATE	APPROVED
		REVISIONS		

JACOBS
Jacobs Technology Inc.

SIGNATURES		DATE
DRAWN	M. HENNIGH	3/07/14
CHECKED	J. WHITEFORD	3/07/14
SUBMITTED	S. RITTER	3/07/14
ST OF LICENSURE: TN LICENSE NO: 00110556		
APPROVED	G. WARD	3/07/14
	S. HUNT	3/07/14

NATIONAL AERONAUTICS AND SPACE ADMINISTRATION
JOHN F. KENNEDY SPACE CENTER, NASA
KENNEDY SPACE CENTER, FLORIDA

KSC LAUNCH PAD 39-B
ENVIRONMENTAL CONTROL SYSTEM (ECS) REFURBISHMENT
INSTRUMENTATION
ECS LP SYSTEM A1/B1 CHASSIS 35427
DEMOLITION & MODIFICATION SHEET 2

I-045

FILE NO. | SIZE F | DWG.NO. 79K39602 | REV
PCN. NO. 98898 | SHEET 128 OF 187

ECS RIO CABINET 35427 SYSTEM A1

IDENT	TAG NAME	I/O TYPE	DESCRIPTION	RACK	SLOT	CH	DEVICE TAG	ENCLOSURE INTERFACE CONNECTOR	DEVICE REFERENCE SCHEMATIC	POWER SOURCE/BUS	POWER RETURN/ NEUTRAL	POWER REFERENCE SCHEMATIC	SIGNAL TYPE	SENSOR RANGE	UNITS
1756-IF6I ISOLATED ANALOG VOLTAGE/CURRENT INPUT MODULE															
35427A-AI-1	35427_GSP_SYSA_SUP_V	AI	35427 GSP BUS A VDC (SUPPLY VOLTAGE = SIGNAL x 4)	A1	1	0	R2	N/A	I-093	N/A	TB3 D1R	I-093	0 - 10 VDC	0 - 10	VDC
35427A-AI-2		AI		A1	1	1									
35427A-AI-3		AI		A1	1	2									
35427A-AI-4		AI		A1	1	3									
35427A-AI-5		AI		A1	1	4									
35427A-AI-6		AI		A1	1	5									
1756-IF6I ISOLATED ANALOG VOLTAGE/CURRENT INPUT MODULE															
35427A-AI-7	NB_PRI_CURRENT_IND	AI	NORTH BLOWER PRIMARY CURRENT INDICATION	A1	2	0	NB-001	35427 - J42	I-098	I/O CHAN	I/O CHAN	-	4 - 20mA	TBD	AMPS
35427A-AI-8	SB_PRI_CURRENT_IND	AI	SOUTH BLOWER PRIMARY CURRENT INDICATION	A1	2	1	SB-003	35427 - J23	I-098	I/O CHAN	I/O CHAN	-	4 - 20mA	TBD	AMPS
35427A-AI-9	STBYB_PRI_CURRENT_IND	AI	STANDBY BLOWER PRIMARY CURRENT INDICATION	A1	2	2	RB-002	35427 - J25	I-098	I/O CHAN	I/O CHAN	-	4 - 20mA	TBD	AMPS
35427A-AI-10	ICPS_B1_CURRENT_IND	AI	ICPS BLOWER 1 CURRENT INDICATION	A1	2	3	LB-004	35427 - J28	I-077	I/O CHAN	I/O CHAN	-	4 - 20mA	TBD	AMPS
35427A-AI-11		AI		A1	2	4									
35427A-AI-12		AI		A1	2	5									
1756-OX8I AC(10-265V) / DC(5-150V) ISOLATED RELAY MODULE															
35427A-DO-1	CT_F3_SEC_SEL_CMD	DO	COOLING TOWER FAN 3 SECONDARY SELECT COMMAND	A1	7	0	CTF-403	35427 - J35	I-083	N/A	N/A	-	5 - 150VDC	B SELECTED/A SELECTED	-
35427A-DO-2		DO		A1	7	1									
35427A-DO-3		DO		A1	7	2									
35427A-DO-4		DO		A1	7	3									
35427A-DO-5		DO		A1	7	4									
35427A-DO-6		DO		A1	7	5									
35427A-DO-7		DO		A1	7	6									
35427A-DO-8		DO		A1	7	7									
1756-IB16D DC (10-30V) ISOLATED INPUT MODULE															
35427A-DI-1	35427_D120_ON_IND	DI	35427 - D120 INSTRUMENT BUS POWER ON INDICATION	A1	8	0	TB6 +D120	N/A	I-093	TB6 +D120	TB3 D1R	I-093	10 -30 VDC	PWR ON/ PWR OFF	-
35427A-DI-2	35427_D121_ON_IND	DI	35427 - D121 INSTRUMENT BUS POWER ON INDICATION	A1	8	1	TB7 +D121	N/A	I-093	TB7 +D121	TB3 D1R	I-093	10 -30 VDC	PWR ON/ PWR OFF	-
35427A-DI-3		DI		A1	8	2									
35427A-DI-4		DI		A1	8	3									
35427A-DI-5		DI		A1	8	4									
35427A-DI-6		DI		A1	8	5									
35427A-DI-7		DI		A1	8	6									
35427A-DI-8		DI		A1	8	7									
35427A-DI-9		DI		A1	8	8									
35427A-DI-10		DI		A1	8	9									
35427A-DI-11		DI		A1	8	10									
35427A-DI-12		DI		A1	8	11									
35427A-DI-13		DI		A1	8	12									
35427A-DI-14		DI		A1	8	13									
35427A-DI-15	CT_F1_VFD_FLT_IND	DI	COOLING TOWER FAN 1 VFD FAULT INDICATION	A1	8	14	CTF-401	35427 - J14	I-083	TB6 +D130H	TB3 D1R	I-094	10 - 30 VDC	FAULT/NO FAULT	-
35427A-DI-16	CT_F2_VFD_FLT_IND	DI	COOLING TOWER FAN 2 VFD FAULT INDICATION	A1	8	15	CTF-402	35427 - J15	I-083	TB6 +D130B	TB3 D1R	I-094	10 - 30 VDC	FAULT/NO FAULT	-
1756-IB16D DC (10-30V) ISOLATED INPUT MODULE															
35427A-DI-17	NB_ON_IND	DI	NORTH BLOWER ON INDICATION	A1	9	0	NB-001	35427 - J43	I-098	TB6 +D130H	TB3 D1R	I-094	10 - 30 VDC	ON / OFF	-
35427A-DI-18	SB_ON_IND	DI	SOUTH BLOWER ON INDICATION	A1	9	1	SB-003	35427 - J24	I-098	TB6 +D130A	TB3 D1R	I-094	10 - 30 VDC	ON / OFF	-
35427A-DI-19	STBYB_ON_IND	DI	STANDBY BLOWER ON INDICATION	A1	9	2	RB-002	35427 - J26	I-098	TB6 +D130E	TB3 D1R	I-094	10 - 30 VDC	ON / OFF	-
35427A-DI-20	ICPS_B2_ON_IND	DI	ICPS BLOWER 2 ON INDICATION	A1	9	3	LRB-005	35427 - J46	I-077	TB6 +D130D	TB3 D1R	I-094	10 - 30 VDC	ON / OFF	-
35427A-DI-21	CS_IT_HTR1_ON_IND	DI	DUCT CS/IT HEATER 201A ON INDICATION	A1	9	4	SCR-201-1	35423 - J30	I-091	TB6 +D130B	TB3 D1R	I-094	10 - 30 VDC	ON / OFF	-
35427A-DI-22	CS_AFT_HTR1_ON_IND	DI	DUCT CS/AFT HEATER 231A ON INDICATION	A1	9	5	SCR-231-1	35423 - J27	I-091	TB6 +D130F	TB3 D1R	I-094	10 - 30 VDC	ON / OFF	-
35427A-DI-23	CS_FS_HTR1_ON_IND	DI	DUCT CS/FS HEATER 211A ON INDICATION	A1	9	6	SCR-211-1	35423 - J19	I-091	TB6 +D130C	TB3 D1R	I-094	10 - 30 VDC	ON / OFF	-
35427A-DI-24	SM_HTR1_ON_IND	DI	DUCT SM HEATER 221A ON INDICATION	A1	9	7	SCR-221-1	35423 - J17	I-091	TB6 +D130G	TB3 D1R	I-094	10 - 30 VDC	ON / OFF	-
† 35427A-DI-25	SPARE1_HTR1_ON_IND	DI	SPARE DUCT 1 HEATER 241A ON INDICATION	A1	9	8	SCR-241-1	35423 - J48	I-091	TB6 +D130D	TB3 D1R	I-094	10 - 30 VDC	ON / OFF	
35427A-DI-26	CT_P2_ON_IND	DI	COOLING TOWER PUMP 2 ON INDICATION	A1	9	9	P-412	35427 - J34	I-084	TB6 +D130A	TB3 D1R	I-094	10 - 30 VDC	ON / OFF	-
35427A-DI-27	WG_P2_ON_IND	DI	WATER GLYCOL PUMP 2 ON INDICATION	A1	9	10	P-512	35427 - J36	I-084	TB6 +D130F	TB3 D1R	I-094	10 - 30 VDC	ON / OFF	-
35427A-DI-28	CT_F1_ON_IND	DI	COOLING TOWER FAN 1 ON INDICATION	A1	9	11	CTF-401	35427 - J14	I-083	TB6 +D130H	TB3 D1R	I-094	10 - 30 VDC	ON / OFF	-
35427A-DI-29	35433A3_SG1_POWER_FLT	DI	35433A3 SG-1 POWER FAULT INDICATION	A1	9	12	35433A3 K1-N.O.	35427 - J21	I-092	TB6 +D130E	TB3 D1R	I-094	10 - 30 VDC	FAULT/NO FAULT	-
35427A-DI-30	35433A3_SG1_POWER_OK	DI	35433A3 SG-1 POWER OK INDICATION	A1	9	13	SG1 A3 CM4000 IOC44	35427 - J21	I-092	TB6 +D130F	TB3 D1R	I-094	10 - 30 VDC	PWR OK/PWR NOT OK	-
35427A-DI-31	35433A3_SG1_MAIN_CB_CLSD	DI	35433A3 SG-1 MAIN CB CLOSED INDICATION	A1	9	14	SG1 A3 MAIN CB	35427 - J21	I-092	TB6 +D130G	TB3 D1R	I-094	10 - 30 VDC	CLOSED/NOT CLOSED	-
35427A-DI-32		DI		A1	9	15									
1756-IB16D DC (10-30V) ISOLATED INPUT MODULE															
35427A-DI-33	NB_REM_ON_IND	DI	NORTH BLOWER REMOTE CONTROL ON INDICATION	A1	10	0	NB-001	35427 - J43	I-098	TB6 +D130H	TB3 D1R	I-094	10 - 30 VDC	REMOTE/NOT REMOTE	-
35427A-DI-34	SB_REM_ON_IND	DI	SOUTH BLOWER REMOTE CONTROL ON INDICATION	A1	10	1	SB-003	35427 - J24	I-098	TB6 +D130A	TB3 D1R	I-094	10 - 30 VDC	REMOTE/NOT REMOTE	-
35427A-DI-35	ICPS_B1_REM_ON_IND	DI	ICPS BLOWER 1 REMOTE CONTROL ON INDICATION	A1	10	2	LB-004	35427 - J29	I-077	TB6 +D130C	TB3 D1R	I-094	10 - 30 VDC	REMOTE/NOT REMOTE	-
35427A-DI-36	CT_P2_REM_ON_IND	DI	COOLING TOWER PUMP 2 REMOTE CONTROL ON INDICATION	A1	10	3	P-412	35427 - J33	I-084	TB8 +D230C	TB3 D1R	I-094	10 - 30 VDC	REMOTE/NOT REMOTE	-
35427A-DI-37	CT_P1_PSW_ON_IND	DI	COOLING TOWER PUMP 1 PRESSURE SWITCH ON INDICAITON	A1	10	4	PS-416	35427 - J32	I-084	TB6 +D130C	TB3 D1R	I-094	10 - 30 VDC	ON ABOVE 60 PSI	-
35427A-DI-38	LAS_HTR1_ON_IND	DI	DUCT LAS HEATER 251A ON INDICATION	A1	10	5	SCR-251-1	35427 - J18	I-091	TB6 +D130E	TB3 D1R	I-094	10 - 30 VDC	ON / OFF	-
35427A-DI-39	EC_CC_HTR1_ON_IND	DI	DUCT EC/CC HEATER 261A ON INDICATION	A1	10	6	SCR-261-1	35427 - J20	I-091	TB6 +D130A	TB3 D1R	I-094	10 - 30 VDC	ON / OFF	-
35427A-DI-40	CS_ENG_HTR1_ON_IND	DI	DUCT CS/ENG HEATER 271A ON INDICATION	A1	10	7	SCR-271-1	35427 - J31	I-091	TB6 +D130D	TB3 D1R	I-094	10 - 30 VDC	ON / OFF	-
† 35427A-DI-41	SPARE2_HTR1_ON_IND	DI	SPARE DUCT 2 HEATER 281A ON INDICATION	A1	10	8	SCR-281-1	35427 - J53	I-091	TB6 +D130E	TB3 D1R	I-094	10 - 30 VDC	ON / OFF	-
† 35427A-DI-42	SPARE3_HTR1_ON_IND	DI	SPARE DUCT 3 HEATER 291A ON INDICATION	A1	10	9	SCR-291-1	35427 - J54	I-091	TB6 +D130F	TB3 D1R	I-094	10 - 30 VDC	ON / OFF	-
35427A-DI-43	ICPS_HTR1_ON_IND	DI	DUCT ICPS HEATER 301A ON INDICATION	A1	10	10	SCR-301-1	35427 - J22	I-091	TB6 +D130H	TB3 D1R	I-094	10 - 30 VDC	ON / OFF	-
35427A-DI-44	WG_P2_REM_ON_IND	DI	WATER GLYCOL PUMP 2 REMOTE CONTROL ON INDICATION	A1	10	11	P-512	35427 - J59	I-084	TB6 +D130A	TB3 D1R	I-094	10 - 30 VDC	REMOTE/NOT REMOTE	-
35427A-DI-45	35755_MCCD_E5_ON_IND	DI	35755 MCC-D UNREGULATED 120VAC SOURCE ON INDICATION	A1	10	12	35755 - K1	35427 - J49	I-095	TB6 +D130B	TB3 D1R	I-094	10 - 30 VDC	PWR ON/ PWR OFF	-
35427A-DI-46	CT_F2_ON_IND	DI	COOLING TOWER FAN 2 ON INDICATION	A1	10	13	CTF-402	35427 - J15	I-083	TB6 +D130B	TB3 D1R	I-094	10 - 30 VDC	ON / OFF	-
35427A-DI-47	CT_F3_REM_ON_IND	DI	COOLING TOWER FAN 3 REMOTE CONTROL ON INDICATION	A1	10	14	CTF-403	35427 - J57	I-083	TB6 +D130D	TB3 D1R	I-094	10 - 30 VDC	REMOTE/NOT REMOTE	-
† 35427A-DI-48	SPARE4_HTR1_ON_IND	DI	SPARE DUCT 4 HEATER 311A ON INDICATION	A1	10	15	SCR-311-1	35427 - J63	I-091	TB6 +D130G	TB3 D1R	I-094	10 - 30 VDC	ON / OFF	-

NOTES:

1. ALL CELLS MARKED TBD SHALL BE DETERMINED BY THE CONTRACTOR AFTER FINAL EQUIPMENT SELECTION.
2. ALL BLANK ROWS ARE SPARE I/O POINTS.
3. REFERENCE SHEET I-050 FOR ENCLOSURE 35427 CONTROLS ONE-LINES.
4. THE CONTRACTOR SHALL MODIFY THE EXISTING KGCS SOFTWARE AND PLC CONFIGURATION FOR USE IN THE CONTRACTOR PROVIDED REDUNDANT PLC SYSTEM IN ACCORDANCE WITH THE TAG INDEX TABLE ON THIS SHEET AND THE SEQUENCE OF OPERATIONS ON SHEETS I-102 THROUGH I-104.
5. CHANNEL ASSIGNMENTS FOR SPARE DUCTS ARE FOR INSTALL OPTION. THESE CHANNELS ARE DENOTED BY "†" SYMBOL.

SYM	ZONE	DESCRIPTION	DATE	APPROVED
REVISIONS				

JACOBS™
Jacobs Technology Inc.

SIGNATURES		DATE
DRAWN	M. HENNIGH	3/07/14
CHECKED	J. WHITEFORD	3/07/14
SUBMITTED	S. RITTER	3/07/14
ST OF LICENSURE: TN LICENSE NO: 00110556		
APPROVED	G. WARD	3/07/14
	S. HUNT	3/07/14

NATIONAL AERONAUTICS AND SPACE ADMINISTRATION
JOHN F. KENNEDY SPACE CENTER, NASA
KENNEDY SPACE CENTER, FLORIDA

KSC LAUNCH PAD 39-B
ENVIRONMENTAL CONTROL SYSTEM (ECS) REFURBISHMENT
INSTRUMENTATION
ECS LP SYSTEM A1/B1 CHASSIS 35427
TAG INDEX SHEET 1

I-046

FILE NO.	SIZE	DWG.NO.	REV
	F	79K39602	
PCN. NO. 98898		SHEET 129 OF 187	

ECS RIO CABINET 35427 SYSTEM A1 (CONTINUED FROM SHEET I-046)

IDENT	TAG NAME	I/O TYPE	DESCRIPTION	RACK	SLOT	CH	DEVICE TAG	ENCLOSURE INTERFACE CONNECTOR	DEVICE REFERENCE SCHEMATIC	POWER SOURCE/BUS	POWER RETURN/ NEUTRAL	POWER REFERENCE SCHEMATIC	SIGNAL TYPE	SENSOR RANGE	UNITS
1756-OB8EI DC (10-30V) ELECTRONICALLY FUSED ISOLATED OUTPUT MODULE															
35427A-DO-9	35427_D120_ON_CMD	DO	35427 - D120 INSTRUMENT BUS POWER ON COMMAND	A1	11	0	35427 -K1	N/A	I-093	TB1 +D110	TB3 D1R	I-093	10 - 30 VDC	PWR ON/ PWR OFF	-
35427A-DO-10	35427_D121_ON_CMD	DO	35427 - D121 COMMAND BUS POWER ON COMMAND	A1	11	1	35427 -K2	N/A	I-093	TB1 +D110	TB3 D1R	I-093	10 - 30 VDC	PWR ON/ PWR OFF	-
35427A-DO-11		DO		A1	11	2									
35427A-DO-12		DO		A1	11	3									
35427A-DO-13		DO		A1	11	4									
35427A-DO-14		DO		A1	11	5									
35427A-DO-15		DO		A1	11	6									
35427A-DO-16	35755_MCCD_E5_ON_CMD	DO	35755 MCC-D UNREGULATED 120VAC SOURCE ON COMMAND	A1	11	7	35755 - K1	35427 - J49	I-095	TB7 +D131H	TB3 D1R	I-094	10 - 30 VDC	PWR ON/ PWR OFF	-
1756-OB8EI DC (10-30V) ELECTRONICALLY FUSED ISOLATED OUTPUT MODULE															
35427A-DO-17	35427_D130A_ON_CMD	DO	35427 - D130A INSTRUMENT BUS POWER ON COMMAND	A1	12	0	TB6 +D130A	N/A	I-094	TB6 +D120	TB3 D1R	I-094	10 - 30 VDC	PWR ON/ PWR OFF	-
35427A-DO-18	35427_D130B_ON_CMD	DO	35427 - D130B INSTRUMENT BUS POWER ON COMMAND	A1	12	1	TB6 +D130B	N/A	I-094	TB6 +D120	TB3 D1R	I-094	10 - 30 VDC	PWR ON/ PWR OFF	-
35427A-DO-19	35427_D130C_ON_CMD	DO	35427 - D130C INSTRUMENT BUS POWER ON COMMAND	A1	12	2	TB6 +D130C	N/A	I-094	TB6 +D120	TB3 D1R	I-094	10 - 30 VDC	PWR ON/ PWR OFF	-
35427A-DO-20	35427_D130D_ON_CMD	DO	35427 - D130D INSTRUMENT BUS POWER ON COMMAND	A1	12	3	TB6 +D130D	N/A	I-094	TB6 +D120	TB3 D1R	I-094	10 - 30 VDC	PWR ON/ PWR OFF	-
35427A-DO-21	35427_D130E_ON_CMD	DO	35427 - D130E INSTRUMENT BUS POWER ON COMMAND	A1	12	4	TB6 +D130E	N/A	I-094	TB6 +D120	TB3 D1R	I-094	10 - 30 VDC	PWR ON/ PWR OFF	-
35427A-DO-22	35427_D130F_ON_CMD	DO	35427 - D130F INSTRUMENT BUS POWER ON COMMAND	A1	12	5	TB6 +D130F	N/A	I-094	TB6 +D120	TB3 D1R	I-094	10 - 30 VDC	PWR ON/ PWR OFF	-
35427A-DO-23	35427_D130G_ON_CMD	DO	35427 - D130G INSTRUMENT BUS POWER ON COMMAND	A1	12	6	TB6 +D130G	N/A	I-094	TB6 +D120	TB3 D1R	I-094	10 - 30 VDC	PWR ON/ PWR OFF	-
35427A-DO-24	35427_D130H_ON_CMD	DO	35427 - D130H INSTRUMENT BUS POWER ON COMMAND	A1	12	7	TB6 +D130H	N/A	I-094	TB6 +D120	TB3 D1R	I-094	10 - 30 VDC	PWR ON/ PWR OFF	-
1756-OB8EI DC (10-30V) ELECTRONICALLY FUSED ISOLATED OUTPUT MODULE															
35427A-DO-25	35427_D131A_ON_CMD	DO	35427 - D131A COMMAND BUS POWER ON COMMAND	A1	13	0	TB7 +D131A	N/A	I-094	TB7 +D121	TB3 D1R	I-094	10 - 30 VDC	PWR ON/ PWR OFF	-
35427A-DO-26	35427_D131B_ON_CMD	DO	35427 - D131B COMMAND BUS POWER ON COMMAND	A1	13	1	TB7 +D131B	N/A	I-094	TB7 +D121	TB3 D1R	I-094	10 - 30 VDC	PWR ON/ PWR OFF	-
35427A-DO-27	35427_D131C_ON_CMD	DO	35427 - D131C COMMAND BUS POWER ON COMMAND	A1	13	2	TB7 +D131C	N/A	I-094	TB7 +D121	TB3 D1R	I-094	10 - 30 VDC	PWR ON/ PWR OFF	-
35427A-DO-28	35427_D131D_ON_CMD	DO	35427 - D131D COMMAND BUS POWER ON COMMAND	A1	13	3	TB7 +D131D	N/A	I-094	TB7 +D121	TB3 D1R	I-094	10 - 30 VDC	PWR ON/ PWR OFF	-
35427A-DO-29	35427_D131E_ON_CMD	DO	35427 - D131E COMMAND BUS POWER ON COMMAND	A1	13	4	TB7 +D131E	N/A	I-094	TB7 +D121	TB3 D1R	I-094	10 - 30 VDC	PWR ON/ PWR OFF	-
35427A-DO-30	35427_D131F_ON_CMD	DO	35427 - D131F COMMAND BUS POWER ON COMMAND	A1	13	5	TB7 +D131F	N/A	I-094	TB7 +D121	TB3 D1R	I-094	10 - 30 VDC	PWR ON/ PWR OFF	-
35427A-DO-31	35427_D131G_ON_CMD	DO	35427 - D131G COMMAND BUS POWER ON COMMAND	A1	13	6	TB7 +D131G	N/A	I-094	TB7 +D121	TB3 D1R	I-094	10 - 30 VDC	PWR ON/ PWR OFF	-
35427A-DO-32	35427_D131H_ON_CMD	DO	35427 - D131H COMMAND BUS POWER ON COMMAND	A1	13	7	TB7 +D131H	N/A	I-094	TB7 +D121	TB3 D1R	I-094	10 - 30 VDC	PWR ON/ PWR OFF	-
1756-OB8EI DC (10-30V) ELECTRONICALLY FUSED ISOLATED OUTPUT MODULE															
35427A-DO-33	CT_F3_PRI_ON_CMD	DO	COOLING TOWER FAN 3 PRIMARY ON COMMAND	A1	14	0	CTF-403	35427 - J35	I-083	TB7 +D131E	TB3 D1R	I-094	10 - 30 VDC	ON / OFF	-
† 35427A-DO-34	SPARE4_HTR1_ON_CMD	DO	SPARE DUCT 4 HEATER 311A ON COMMAND	A1	14	1	SCR-311-1	35427 - J63	I-091	TB7 +D131F	TB3 D1R	I-094	10 - 30 VDC	ON / OFF	-
35427A-DO-35	WG_P2_ON_CMD	DO	WATER GLYCOL PUMP 2 ON COMMAND	A1	14	2	P-512	35427 - J36	I-084	TB7 +D131F	TB3 D1R	I-094	10 - 30 VDC	ON / OFF	-
35427A-DO-36	ICPS_HTR1_ON_CMD	DO	DUCT ICPS HEATER 301A ON COMMAND	A1	14	3	SCR-301-1	35423 - J22	I-091	TB7 +D131C	TB3 D1R	I-094	10 - 30 VDC	ON / OFF	-
35427A-DO-37		DO		A1	14	4									
35427A-DO-38	CT_F1_SEC_ON_CMD	DO	COOLING TOWER FAN 1 SECONDARY ON COMMAND	A1	14	5	CTF-401	35427 - J14	I-083	TB7 +D131B	TB3 D1R	I-094	10 - 30 VDC	ON / OFF	-
35427A-DO-39	CT_F2_SEC_ON_CMD	DO	COOLING TOWER FAN 2 SECONDARY ON COMMAND	A1	14	6	CTF-402	35427 - J15	I-083	TB7 +D131D	TB3 D1R	I-094	10 - 30 VDC	ON / OFF	-
35427A-DO-40	CT_P2_ON_CMD	DO	COOLING TOWER PUMP 2 ON COMMAND	A1	14	7	P-412	35427 - J34	I-084	TB7 +D131A	TB3 D1R	I-094	10 - 30 VDC	ON / OFF	-
1756-OB8EI DC (10-30V) ELECTRONICALLY FUSED ISOLATED OUTPUT MODULE															
35427A-DO-41	CS_FS_HTR1_ON_CMD	DO	DUCT CS/FS HEATER 211A ON COMMAND	A1	15	0	SCR-211-1	35427 - J19	I-091	TB7 +D131G	TB3 D1R	I-094	10 - 30 VDC	ON / OFF	-
35427A-DO-42	SM_HTR1_ON_CMD	DO	DUCT SM HEATER 221A ON COMMAND	A1	15	1	SCR-221-1	35427 - J17	I-091	TB7 +D131D	TB3 D1R	I-094	10 - 30 VDC	ON / OFF	-
† 35427A-DO-43	SPARE1_HTR1_ON_CMD	DO	SPARE DUCT 1 HEATER 241A ON COMMAND	A1	15	2	SCR-241-1	35427 - J48	I-091	TB7 +D131C	TB3 D1R	I-094	10 - 30 VDC	ON / OFF	-
35427A-DO-44	LAS_HTR1_ON_CMD	DO	DUCT LAS HEATER 251A ON COMMAND	A1	15	3	SCR-251-1	35427 - J18	I-091	TB7 +D131A	TB3 D1R	I-094	10 - 30 VDC	ON / OFF	-
35427A-DO-45	EC_CC_HTR1_ON_CMD	DO	DUCT EC/CC HEATER 261A ON COMMAND	A1	15	4	SCR-261-1	35427 - J20	I-091	TB7 +D131H	TB3 D1R	I-094	10 - 30 VDC	ON / OFF	-
35427A-DO-46	CS_ENG_HTR1_ON_CMD	DO	DUCT CS/ENG HEATER 271A ON COMMAND	A1	15	5	SCR-271-1	35427 - J31	I-091	TB7 +D131B	TB3 D1R	I-094	10 - 30 VDC	ON / OFF	-
† 35427A-DO-47	SPARE2_HTR1_ON_CMD	DO	SPARE DUCT 2 HEATER 281A ON COMMAND	A1	15	6	SCR-281-1	35427 - J53	I-091	TB7 +D131D	TB3 D1R	I-094	10 - 30 VDC	ON / OFF	-
† 35427A-DO-48	SPARE3_HTR1_ON_CMD	DO	SPARE DUCT 3 HEATER 291A ON COMMAND	A1	15	7	SCR-291-1	35427 - J54	I-091	TB7 +D131E	TB3 D1R	I-094	10 - 30 VDC	ON / OFF	-
1756-OB8EI DC (10-30V) ELECTRONICALLY FUSED ISOLATED OUTPUT MODULE															
35427A-DO-49	NB_PRI_ON_CMD	DO	NORTH BLOWER PRIMARY ON COMMAND	A1	16	0	NB-001	35427 - J43	I-098	TB7 +D131G	TB3 D1R	I-094	10 - 30 VDC	ON / OFF	-
35427A-DO-50	SB_PRI_ON_CMD	DO	SOUTH BLOWER ON PRIMARY COMMAND	A1	16	1	SB-003	35427 - J24	I-098	TB7 +D131A	TB3 D1R	I-094	10 - 30 VDC	ON / OFF	-
35427A-DO-51	STBYB_PRI_ON_CMD	DO	STANDBY BLOWER PRIMARY ON COMMAND	A1	16	2	RB-002	35427 - J26	I-098	TB7 +D131B	TB3 D1R	I-094	10 - 30 VDC	ON / OFF	-
35427A-DO-52	ICPS_B1_ON_CMD	DO	ICPS BLOWER 1 ON COMMAND	A1	16	3	LB-004	35427 - J29	I-077	TB7 +D131C	TB3 D1R	I-094	10 - 30 VDC	ON / OFF	-
35427A-DO-53	CS_IT_HTR1_ON_CMD	DO	DUCT CS/IT HEATER 201A ON COMMAND	A1	16	4	SCR-201-1	35427 - J30	I-091	TB7 +D131E	TB3 D1R	I-094	10 - 30 VDC	ON / OFF	-
35427A-DO-54		DO		A1	16	5									
35427A-DO-55	CS_AFT_HTR1_ON_CMD	DO	DUCT CS/AFT HEATER 231A ON COMMAND	A1	16	6	SCR-231-1	35427 - J27	I-091	TB7 +D131F	TB3 D1R	I-094	10 - 30 VDC	ON / OFF	-
35427A-DO-56		DO		A1	16	7									

NOTES:

1. ALL CELLS MARKED TBD SHALL BE DETERMINED BY THE CONTRACTOR AFTER FINAL EQUIPMENT SELECTION.
2. ALL BLANK ROWS ARE SPARE I/O POINTS.
3. REFERENCE SHEET I-050 FOR ENCLOSURE 35427 CONTROLS ONE-LINES.
4. THE CONTRACTOR SHALL MODIFY THE EXISTING KGCS SOFTWARE AND PLC CONFIGURATION FOR USE IN THE CONTRACTOR PROVIDED REDUNDANT PLC SYSTEM IN ACCORDANCE WITH THE TAG INDEX TABLE ON THIS SHEET AND THE SEQUENCE OF OPERATIONS ON SHEETS I-102 THROUGH I-104.
5. CHANNEL ASSIGNMENTS FOR SPARE DUCTS ARE FOR INSTALL OPTION. THESE CHANNELS ARE DENOTED BY "†" SYMBOL.

SYM	ZONE	DESCRIPTION	DATE	APPROVED
REVISIONS				

JACOBS™
Jacobs Technology Inc.

SIGNATURES		DATE
DRAWN	M. HENNIGH	3/07/14
CHECKED	J. WHITEFORD	3/07/14
SUBMITTED	S. RITTER	3/07/14
ST OF LICENSURE: TN LICENSE NO: 00110556		
APPROVED	G. WARD	3/07/14
	S. HUNT	3/07/14

NATIONAL AERONAUTICS AND SPACE ADMINISTRATION
JOHN F. KENNEDY SPACE CENTER, NASA
KENNEDY SPACE CENTER, FLORIDA

KSC LAUNCH PAD 39-B
ENVIRONMENTAL CONTROL SYSTEM (ECS) REFURBISHMENT
INSTRUMENTATION
ECS LP SYSTEM A1/B1 CHASSIS 35427
TAG INDEX SHEET 2

FILE NO.	SIZE	DWG.NO.	REV
	F	79K39602	

PCN. NO. 98898 SHEET 130 OF 187

I-047

ECS RIO CABINET 35427 SYSTEM B1

IDENT	TAG NAME	I/O TYPE	DESCRIPTION	RACK	SLOT	CH	DEVICE TAG	ENCLOSURE INTERFACE CONNECTOR	DEVICE REFERENCE SCHEMATIC	POWER SOURCE/BUS	POWER RETURN/ NEUTRAL	POWER REFERENCE SCHEMATIC	SIGNAL TYPE	SENSOR RANGE	UNITS
1756-IF6I ISOLATED ANALOG VOLTAGE/CURRENT INPUT MODULE															
35427B-AI-1	35427_GSP_SYSB_SUP_V	AI	35427 GSP BUS B VDC (SUPPLY VOLTAGE = SIGNAL x 4)	B1	1	0	R4	N/A	I-093	N/A	TB3 D1R	I-093	0 – 10 VDC	0 – 10	VDC
35427B-AI-2		AI		B1	1	1									
35427B-AI-3		AI		B1	1	2									
35427B-AI-4		AI		B1	1	3									
35427B-AI-5		AI		B1	1	4									
35427B-AI-6		AI		B1	1	5									
1756-IF6I ISOLATED ANALOG VOLTAGE/CURRENT INPUT MODULE															
35427B-AI-7	NB_SEC_CURRENT_IND	AI	NORTH BLOWER SECONDARY CURRENT INDICATION	B1	2	0	NB-001	35427 – J42	I-098	I/O CHAN	I/O CHAN	–	4 – 20mA	TBD	AMPS
35427B-AI-8	SB_SEC_CURRENT_IND	AI	SOUTH BLOWER SECONDARY CURRENT INDICATION	B1	2	1	SB-003	35427 – J23	I-098	I/O CHAN	I/O CHAN	–	4 – 20mA	TBD	AMPS
35427B-AI-9	STBYB_SEC_CURRENT_IND	AI	STANDBY BLOWER SECONDARY CURRENT INDICATION	B1	2	2	RB-002	35427 – J25	I-098	I/O CHAN	I/O CHAN	–	4 – 20mA	TBD	AMPS
35427B-AI-10	ICPS_B2_CURRENT_IND	AI	ICPS BLOWER 2 CURRENT INDICATION	B1	2	3	LRB-005	35427 – J45	I-077	I/O CHAN	I/O CHAN	–	4 – 20mA	TBD	AMPS
35427B-AI-11		AI		B1	2	4									
35427B-AI-12		AI		B1	2	5									
1756-OX8I AC(10-265V) / DC(5-150V) ISOLATED RELAY MODULE															
35427B-DO-1	NB_SEC_SEL_CMD	DO	NORTH BLOWER SECONDARY SELECT COMMAND	B1	6	0	NB-001	35427 – J43	I-098	N/A	N/A	–	10 – 30 VDC	B SELECTED/A SELECTED	–
35427B-DO-2	SB_SEC_SEL_CMD	DO	SOUTH BLOWER SECONDARY SELECT COMMAND	B1	6	1	SB-003	35427 – J24	I-098	N/A	N/A	–	10 – 30 VDC	B SELECTED/A SELECTED	–
35427B-DO-3	STBYB_SEC_SEL_CMD	DO	STANDDBY BLOWER SECONDARY SELECT COMMAND	B1	6	2	RB-002	35427 – J26	I-098	N/A	N/A	–	10 – 30 VDC	B SELECTED/A SELECTED	–
35427B-DO-4		DO		B1	6	3									
35427B-DO-5		DO		B1	6	4									
35427B-DO-6		DO		B1	6	5									
35427B-DO-7		DO		B1	6	6									
35427B-DO-8		DO		B1	6	7									
1756-OX8I AC(10-265V) / DC(5-150V) ISOLATED RELAY MODULE															
35427B-DO-9	CT_F1_SEC_SEL_CMD	DO	COOLING TOWER FAN 1 SECONDARY SELECT COMMAND	B1	7	0	CTF-401	35427 – J14	I-083	N/A	N/A	–	10 – 30 VDC	B SELECTED/A SELECTED	–
35427B-DO-10	CT_F2_SEC_SEL_CMD	DO	COOLING TOWER FAN 2 SECONDARY SELECT COMMAND	B1	7	1	CTF-402	35427 – J15	I-083	N/A	N/A	–	10 – 30 VDC	B SELECTED/A SELECTED	–
35427B-DO-11		DO		B1	7	2									
35427B-DO-12		DO		B1	7	3									
35427B-DO-13		DO		B1	7	4									
35427B-DO-14		DO		B1	7	5									
35427B-DO-15		DO		B1	7	6									
35427B-DO-16		DO		B1	7	7									
1756-IB16D DC (10-30V) ISOLATED INPUT MODULE															
35427B-DI-1	35427_D220_ON_IND	DI	35427 – D220 INSTRUMENT BUS POWER ON INDICATION	B1	8	0	TB8 +D220	N/A	I-093	TB8 +D220	TB3 D1R	I-093	10 –30 VDC	PWR ON/ PWR OFF	–
35427B-DI-2	35427_D221_ON_IND	DI	35427 – D221 INSTRUMENT BUS POWER ON INDICATION	B1	8	1	TB9 +D221	N/A	I-093	TB9 +D221	TB3 D1R	I-093	10 –30 VDC	PWR ON/ PWR OFF	–
35427B-DI-3		DI		B1	8	2									
35427B-DI-4		DI		B1	8	3									
35427B-DI-5		DI		B1	8	4									
35427B-DI-6		DI		B1	8	5									
35427B-DI-7		DI		B1	8	6									
35427B-DI-8		DI		B1	8	7									
35427B-DI-9		DI		B1	8	8									
35427B-DI-10		DI		B1	8	9									
35427B-DI-11		DI		B1	8	10									
35427B-DI-12		DI		B1	8	11									
35427B-DI-13		DI		B1	8	12									
35427B-DI-14		DI		B1	8	13									
35427B-DI-15		DI		B1	8	14									
35427B-DI-16		DI		B1	8	15									
1756-IB16D DC (10-30V) ISOLATED INPUT MODULE															
35427B-DI-17		DI		B1	9	0									
35427B-DI-18		DI		B1	9	1									
35427B-DI-19	CT_F3_VFD_FLT_IND	DI	COOLING TOWER FAN 3 VFD FAULT INDICATION	B1	9	2	CTF-403	35427 – J35	I-083	TB8 +D230H	TB3 D1R	I-094	10 – 30 VDC	FAULT/NO FAULT	–
35427B-DI-20	ICPS_B1_ON_IND	DI	ICPS BLOWER 1 ON INDICATION	B1	9	3	LB-004	35427 – J29	I-077	TB8 +D230A	TB3 D1R	I-094	10 – 30 VDC	ON / OFF	–
35427B-DI-21	CS_IT_HTR2_ON_IND	DI	DUCT CS/IT HEATER 201B ON INDICATION	B1	9	4	SCR-201-2	35427 – J47	I-091	TB8 +D230B	TB3 D1R	I-094	10 – 30 VDC	ON / OFF	–
35427B-DI-22	CS_AFT_HTR2_ON_IND	DI	DUCT CS/AFT HEATER 231B ON INDICATION	B1	9	5	SCR-231-2	35427 – J44	I-091	TB8 +D230F	TB3 D1R	I-094	10 – 30 VDC	ON / OFF	–
35427B-DI-23	CS_FS_HTR2_ON_IND	DI	DUCT CS/FS HEATER 211B ON INDICATION	B1	9	6	SCR-211-2	35427 – J40	I-091	TB8 +D230C	TB3 D1R	I-094	10 – 30 VDC	ON / OFF	–
35427B-DI-24	SM_HTR2_ON_IND	DI	DUCT SM HEATER 221B ON INDICATION	B1	9	7	SCR-221-2	35427 – J37	I-091	TB8 +D230A	TB3 D1R	I-094	10 – 30 VDC	ON / OFF	–
† 35427B-DI-25	SPARE1_HTR2_ON_IND	DI	SPARE DUCT 1 HEATER 241B ON INDICATION	B1	9	8	SCR-241-2	35427 – J64	I-091	TB8 +D230D	TB3 D1R	I-094	10 – 30 VDC	ON / OFF	–
35427B-DI-26	CT_P1_ON_IND	DI	COOLING TOWER PUMP 1 ON INDICATION	B1	9	9	P-411	35427 – J13	I-084	TB8 +D230A	TB3 D1R	I-094	10 – 30 VDC	ON / OFF	–
35427B-DI-27	WG_P1_ON_IND	DI	WATER GLYCOL PUMP 1 ON INDICATION	B1	9	10	P-511	35427 – J16	I-084	TB8 +D230F	TB3 D1R	I-094	10 – 30 VDC	ON / OFF	–
35427B-DI-28	CT_F2_REM_ON_IND	DI	COOLING TOWER FAN 2 REMOTE CONTROL ON INDICATION	B1	9	11	CTF-402	35427 – J56	I-083	TB8 +D230D	TB3 D1R	I-094	10 – 30 VDC	REMOTE/NOT REMOTE	–
35427B-DI-29	35434A3_SG2_POWER_FLT	DI	35434A3 SG-2 POWER FAULT INDICATION	B1	9	12	35434A3 K1-N.O.	35427 – J41	I-092	TB8 +D230E	TB3 D1R	I-094	10 – 30 VDC	FAULT/NO FAULT	–
35427B-DI-30	35434A3_SG2_POWER_OK	DI	35434A3 SG-2 POWER OK INDICATION	B1	9	13	SG2 A3 CM4000 IOC44	35427 – J41	I-092	TB8 +D230F	TB3 D1R	I-094	10 – 30 VDC	PWR OK/PWR NOT OK	–
35427B-DI-31	35434A3_SG2_MAIN_CB_CLSD	DI	35434A3 SG-2 MAIN CB CLOSED INDICATION	B1	9	14	SG2 A3 MAIN CB	35427 – J41	I-092	TB8 +D230G	TB3 D1R	I-094	10 – 30 VDC	CLOSED/NOT CLOSED	–
35427B-DI-32		DI		B1	9	15									

NOTES:

1. ALL CELLS MARKED TBD SHALL BE DETERMINED BY THE CONTRACTOR AFTER FINAL EQUIPMENT SELECTION.
2. ALL BLANK ROWS ARE SPARE I/O POINTS.
3. REFERENCE SHEET I-050 FOR ENCLOSURE 35427 CONTROLS ONE-LINES.
4. THE CONTRACTOR SHALL MODIFY THE EXISTING KGCS SOFTWARE AND PLC CONFIGURATION FOR USE IN THE CONTRACTOR PROVIDED REDUNDANT PLC SYSTEM IN ACCORDANCE WITH THE TAG INDEX TABLE ON THIS SHEET AND THE SEQUENCE OF OPERATIONS ON SHEETS I-102 THROUGH I-104.
5. CHANNEL ASSIGNMENTS FOR SPARE DUCTS ARE FOR INSTALL OPTION. THESE CHANNELS ARE DENOTED BY "†" SYMBOL.

SYM	ZONE	DESCRIPTION	DATE	APPROVED
REVISIONS				

JACOBS
Jacobs Technology Inc.

SIGNATURES		DATE
DRAWN	M. HENNIGH	3/07/14
CHECKED	J. WHITEFORD	3/07/14
SUBMITTED	S. RITTER	3/07/14
ST OF LICENSURE: TN LICENSE NO: 00110556		
APPROVED	G. WARD	3/07/14
	S. HUNT	3/07/14

NATIONAL AERONAUTICS AND SPACE ADMINISTRATION
JOHN F. KENNEDY SPACE CENTER, NASA
KENNEDY SPACE CENTER, FLORIDA

KSC LAUNCH PAD 39-B
ENVIRONMENTAL CONTROL SYSTEM (ECS) REFURBISHMENT
INSTRUMENTATION
ECS LP SYSTEM A1/B1 CHASSIS 35427
TAG INDEX SHEET 3

I-048

FILE NO. | SIZE F | DWG.NO. 79K39602 | REV
PCN. NO. 98898 | SHEET 131 OF 187

ECS RIO CABINET 35427 SYSTEM B1 (CONTINUED FROM SHEET I-048)

IDENT	TAG NAME	I/O TYPE	DESCRIPTION	RACK	SLOT	CH	DEVICE TAG	ENCLOSURE INTERFACE CONNECTOR	DEVICE REFERENCE SCHEMATIC	POWER SOURCE/BUS	POWER RETURN/ NEUTRAL	POWER REFERENCE SCHEMATIC	SIGNAL TYPE	SENSOR RANGE	UNITS
1756-IB16D DC (10-30V) ISOLATED INPUT MODULE															
35427B-DI-33	STBY_REM_ON_IND	DI	STANDBY BLOWER REMOTE ON INDICATION	B1	10	0	RB-002	35427 - J26	I-098	TB8 +D230B	TB3 D1R	I-094	10 - 30 VDC	REMOTE/NOT REMOTE	-
35427B-DI-34		DI		B1	10	1									
35427B-DI-35	ICPS_B2_REM_ON_IND	DI	ICPS BLOWER 2 REMOTE ON INDICATION	B1	10	2	LRB-005	35427 - J46	I-077	TB8 +D231D	TB3 D1R	I-094	10 - 30 VDC	REMOTE/NOT REMOTE	-
35427B-DI-36	CT_P1_REM_ON_IND	DI	COOLING TOWER PUMP1 REMOTE CONTROL ON INDICATION	B1	10	3	P-411	35427 - J32	I-084	TB8 +D230B	TB3 D1R	I-094	10 - 30 VDC	REMOTE/NOT REMOTE	-
35427B-DI-37	CT_P2_PSW_ON_IND	DI	COOLING TOWER PUMP 2 PRESSURE SWITCH ON INDICATION	B1	10	4	PS-415	35427 - J33	I-084	TB8 +D230C	TB3 D1R	I-094	10 - 30 VDC	ON ABOVE 60 PSI	-
35427B-DI-38	LAS_HTR2_ON_IND	DI	DUCT LAS HEATER 251B ON INDICATION	B1	10	5	SCR-251-2	35427 - J39	I-091	TB8 +D230D	TB3 D1R	I-094	10 - 30 VDC	ON / OFF	-
35427B-DI-39	EC_CC_HTR2_ON_IND	DI	DUCT EC/CC HEATER 261B ON INDICATION	B1	10	6	SCR-261-2	35427 - J51	I-091	TB8 +D230E	TB3 D1R	I-094	10 - 30 VDC	ON / OFF	-
35427B-DI-40	CS_ENG_HTR2_ON_IND	DI	DUCT CS/ENG HEATER 271B ON INDICATION	B1	10	7	SCR-271-2	35427 - J52	I-091	TB8 +D230H	TB3 D1R	I-094	10 - 30 VDC	ON / OFF	-
† 35427B-DI-41	SPARE2_HTR2_ON_IND	DI	SPARE DUCT 2 HEATER 281B ON INDICATION	B1	10	8	SCR-281-2	35427 - J60	I-091	TB8 +D230E	TB3 D1R	I-094	10 - 30 VDC	ON / OFF	-
† 35427B-DI-42	SPARE3_HTR2_ON_IND	DI	SPARE DUCT 3 HEATER 291B ON INDICATION	B1	10	9	SCR-291-2	35427 - J61	I-091	TB8 +D230F	TB3 D1R	I-094	10 - 30 VDC	ON / OFF	-
35427B-DI-43	ICPS_HTR2_ON_IND	DI	DUCT ICPS HEATER 301B ON INDICATION	B1	10	10	SCR-301-2	35427 - J38	I-091	TB8 +D230G	TB3 D1R	I-094	10 - 30 VDC	ON / OFF	-
35427B-DI-44	WG_P1_REM_ON_IND	DI	WATER GLYCOL PUMP 1 REMOTE CONTROL ON INDICATION	B1	10	11	P-511	35427 - J58	I-084	TB8 +D230E	TB3 D1R	I-094	10 - 30 VDC	REMOTE/NOT REMOTE	-
35427B-DI-45	35436_MCCB_ON_IND	DI	35436 MCC-B UNREGULATED 120VAC SOURCE ON INDICATION	B1	10	12	35436 - K1	35427 - J50	I-095	TB8 +D230C	TB3 D1R	I-094	10 - 30 VDC	PWR ON/ PWR OFF	-
35427B-DI-46	CT_F1_REM_ON_IND	DI	COOLING TOWER FAN 1 REMOTE CONTROL ON INDICATION	B1	10	13	CTF-401	35427 - J55	I-083	TB8 +D230G	TB3 D1R	I-094	10 - 30 VDC	REMOTE/NOT REMOTE	-
35427B-DI-47	CT_F3_ON_IND	DI	COOLING TOWER FAN 3 ON INDICATION	B1	10	14	CTF-403	35427 - J35	I-083	TB8 +D230H	TB3 D1R	I-094	10 - 30 VDC	ON / OFF	-
† 35427B-DI-48	SPARE4_HTR2_ON_IND	DI	SPARE DUCT 4 HEATER 311B ON INDICATION	B1	10	15	SCR-311-2	35427 - J62	I-091	TB8 +D230G	TB3 D1R	I-094	10 - 30 VDC	ON / OFF	-
1756-OB8EI DC (10-30V) ELECTRONICALLY FUSED ISOLATED OUTPUT MODULE															
35427B-DO-17	35427_D220_ON_CMD	DO	35427 - D220 INSTRUMENT BUS POWER ON COMMAND	B1	11	0	K3	N/A	I-093	TB2 +D210	TB3 D1R	I-093	10 - 30 VDC	PWR ON/ PWR OFF	-
35427B-DO-18	35427_D221_ON_CMD	DO	35427 - D221 COMMAND BUS POWER ON COMMAND	B1	11	1	K4	N/A	I-093	TB2 +D210	TB3 D1R	I-093	10 - 30 VDC	PWR ON/ PWR OFF	-
35427B-DO-19		DO		B1	11	2									
35427B-DO-20		DO		B1	11	3									
35427B-DO-21		DO		B1	11	4									
35427B-DO-22		DO		B1	11	5									
35427B-DO-23		DO		B1	11	6									
35427B-DO-24	35436_MCCB_ON_CMD	DO	35436 MCC-B UNREGULATED 120VAC SOURCE ON COMMAND	B1	11	7	35436 - K1	35427 - J50	I-095	TB9 +D231H	TB3 D1R	I-094	10 - 30 VDC	PWR ON/ PWR OFF	-
1756-OB8EI DC (10-30V) ELECTRONICALLY FUSED ISOLATED OUTPUT MODULE															
35427B-DO-25	35427_D230A_ON_CMD	DO	35427 - D230A INSTRUMENT BUS POWER ON COMMAND	B1	12	0	TB8 +D230A	N/A	I-094	TB8 +D220	TB3 D1R	I-094	10 - 30 VDC	PWR ON/ PWR OFF	-
35427B-DO-26	35427_D230B_ON_CMD	DO	35427 - D230B INSTRUMENT BUS POWER ON COMMAND	B1	12	1	TB8 +D230B	N/A	I-094	TB8 +D220	TB3 D1R	I-094	10 - 30 VDC	PWR ON/ PWR OFF	-
35427B-DO-27	35427_D230C_ON_CMD	DO	35427 - D230C INSTRUMENT BUS POWER ON COMMAND	B1	12	2	TB8 +D230C	N/A	I-094	TB8 +D220	TB3 D1R	I-094	10 - 30 VDC	PWR ON/ PWR OFF	-
35427B-DO-28	35427_D230D_ON_CMD	DO	35427 - D230D INSTRUMENT BUS POWER ON COMMAND	B1	12	3	TB8 +D230D	N/A	I-094	TB8 +D220	TB3 D1R	I-094	10 - 30 VDC	PWR ON/ PWR OFF	-
35427B-DO-29	35427_D230E_ON_CMD	DO	35427 - D230E INSTRUMENT BUS POWER ON COMMAND	B1	12	4	TB8 +D230E	N/A	I-094	TB8 +D220	TB3 D1R	I-094	10 - 30 VDC	PWR ON/ PWR OFF	-
35427B-DO-30	35427_D230F_ON_CMD	DO	35427 - D230F INSTRUMENT BUS POWER ON COMMAND	B1	12	5	TB8 +D230F	N/A	I-094	TB8 +D220	TB3 D1R	I-094	10 - 30 VDC	PWR ON/ PWR OFF	-
35427B-DO-31	35427_D230G_ON_CMD	DO	35427 - D230G INSTRUMENT BUS POWER ON COMMAND	B1	12	6	TB8 +D230G	N/A	I-094	TB8 +D220	TB3 D1R	I-094	10 - 30 VDC	PWR ON/ PWR OFF	-
35427B-DO-32	35427_D230H_ON_CMD	DO	35427 - D230H INSTRUMENT BUS POWER ON COMMAND	B1	12	7	TB8 +D230H	N/A	I-094	TB8 +D220	TB3 D1R	I-094	10 - 30 VDC	PWR ON/ PWR OFF	-
1756-OB8EI DC (10-30V) ELECTRONICALLY FUSED ISOLATED OUTPUT MODULE															
35427B-DO-33	35427_D231A_ON_CMD	DO	35427 - D231A COMMAND BUS POWER ON COMMAND	B1	13	0	TB9 +D231A	N/A	I-094	TB9 +D221	TB3 D1R	I-094	10 - 30 VDC	PWR ON/ PWR OFF	-
35427B-DO-34	35427_D231B_ON_CMD	DO	35427 - D231B COMMAND BUS POWER ON COMMAND	B1	13	1	TB9 +D231B	N/A	I-094	TB9 +D221	TB3 D1R	I-094	10 - 30 VDC	PWR ON/ PWR OFF	-
35427B-DO-35	35427_D231C_ON_CMD	DO	35427 - D231C COMMAND BUS POWER ON COMMAND	B1	13	2	TB9 +D231C	N/A	I-094	TB9 +D221	TB3 D1R	I-094	10 - 30 VDC	PWR ON/ PWR OFF	-
35427B-DO-36	35427_D231D_ON_CMD	DO	35427 - D231D COMMAND BUS POWER ON COMMAND	B1	13	3	TB9 +D231D	N/A	I-094	TB9 +D221	TB3 D1R	I-094	10 - 30 VDC	PWR ON/ PWR OFF	-
35427B-DO-37	35427_D231E_ON_CMD	DO	35427 - D231E COMMAND BUS POWER ON COMMAND	B1	13	4	TB9 +D231E	N/A	I-094	TB9 +D221	TB3 D1R	I-094	10 - 30 VDC	PWR ON/ PWR OFF	-
35427B-DO-38	35427_D231F_ON_CMD	DO	35427 - D231F COMMAND BUS POWER ON COMMAND	B1	13	5	TB9 +D231F	N/A	I-094	TB9 +D221	TB3 D1R	I-094	10 - 30 VDC	PWR ON/ PWR OFF	-
35427B-DO-39	35427_D231G_ON_CMD	DO	35427 - D231G COMMAND BUS POWER ON COMMAND	B1	13	6	TB9 +D231G	N/A	I-094	TB9 +D221	TB3 D1R	I-094	10 - 30 VDC	PWR ON/ PWR OFF	-
35427B-DO-40	35427_D231H_ON_CMD	DO	35427 - D231H COMMAND BUS POWER ON COMMAND	B1	13	7	TB9 +D231H	N/A	I-094	TB9 +D221	TB3 D1R	I-094	10 - 30 VDC	PWR ON/ PWR OFF	-
1756-OB8EI DC (10-30V) ELECTRONICALLY FUSED ISOLATED OUTPUT MODULE															
35427B-DO-41	CT_F3_SEC_ON_CMD	DO	COOLING TOWER FAN 3 SECONDARY ON COMMAND	B1	14	0	CTF-403	35427 - J35	I-083	TB9 +D231E	TB3 D1R	I-094	10 - 30 VDC	ON / OFF	-
† 35427B-DO-42	SPARE4_HTR2_ON_CMD	DO	SPARE DUCT 4 HEATER 311B ON COMMAND	B1	14	1	SCR-311-2	35427 - J62	I-091	TB9 +D231H	TB3 D1R	I-094	10 - 30 VDC	ON / OFF	-
35427B-DO-43	WG_P1_ON_CMD	DO	WATER GLYCOL PUMP 1 ON COMMAND	B1	14	2	P-511	35427 - J16	I-084	TB9 +D231F	TB3 D1R	I-094	10 - 30 VDC	ON / OFF	-
35427B-DO-44	ICPS_HTR2_ON_CMD	DO	DUCT ICPS HEATER 301B ON COMMAND	B1	14	3	SCR-301-2	35427 - J38	I-091	TB9 +D231D	TB3 D1R	I-094	10 - 30 VDC	ON / OFF	-
35427B-DO-45		DO		B1	14	4									
35427B-DO-46	CT_F1_PRI_ON_CMD	DO	COOLING TOWER FAN 1 PRIMARY ON COMMAND	B1	14	5	CTF-401	35427 - J14	I-083	TB9 +D231B	TB3 D1R	I-094	10 - 30 VDC	ON / OFF	-
35427B-DO-47	CT_F2_PRI_ON_CMD	DO	COOLING TOWER FAN 2 PRIMARY ON COMMAND	B1	14	6	CTF-402	35427 - J15	I-083	TB9 +D231D	TB3 D1R	I-094	10 - 30 VDC	ON / OFF	-
35427B-DO-48	CT_P1_ON_CMD	DO	COOLING TOWER PUMP1 ON COMMAND	B1	14	7	P-411	35427 - J13	I-084	TB9 +D231A	TB3 D1R	I-094	10 - 30 VDC	ON / OFF	-
1756-OB8EI DC (10-30V) ELECTRONICALLY FUSED ISOLATED OUTPUT MODULE															
35427B-DO-49	CS_FS_HTR2_ON_CMD	DO	DUCT CS/FS HEATER 211B ON COMMAND	B1	15	0	SCR-211-2	35427 - J40	I-091	TB9 +D231G	TB3 D1R	I-094	10 - 30 VDC	ON / OFF	-
35427B-DO-50	SM_HTR2_ON_CMD	DO	DUCT SM HEATER 221B ON COMMAND	B1	15	1	SCR-221-2	35427 - J37	I-091	TB9 +D231C	TB3 D1R	I-094	10 - 30 VDC	ON / OFF	-
† 35427B-DO-51	SPARE1_HTR2_ON_CMD	DO	SPARE DUCT 1 HEATER 241B ON COMMAND	B1	15	2	SCR-241-2	35427 - J64	I-091	TB9 +D231E	TB3 D1R	I-094	10 - 30 VDC	ON / OFF	-
35427B-DO-52	LAS_HTR2_ON_CMD	DO	DUCT LAS HEATER 251B ON COMMAND	B1	15	3	SCR-251-2	35427 - J39	I-091	TB9 +D231B	TB3 D1R	I-094	10 - 30 VDC	ON / OFF	-
35427B-DO-53	EC_CC_HTR2_ON_CMD	DO	DUCT EC/CC HEATER 261B ON COMMAND	B1	15	4	SCR-261-2	35427 - J51	I-091	TB9 +D231A	TB3 D1R	I-094	10 - 30 VDC	ON / OFF	-
35427B-DO-54	CS_ENG_HTR2_ON_CMD	DO	DUCT CS/ENG HEATER 271B ON COMMAND	B1	15	5	SCR-271-2	35427 - J52	I-091	TB9 +D231H	TB3 D1R	I-094	10 - 30 VDC	ON / OFF	-
† 35427B-DO-55	SPARE2_HTR2_ON_CMD	DO	SPARE DUCT 2 HEATER 281B ON COMMAND	B1	15	6	SCR-281-2	35427 - J60	I-091	TB9 +D231F	TB3 D1R	I-094	10 - 30 VDC	ON / OFF	-
† 35427B-DO-56	SPARE3_HTR2_ON_CMD	DO	SPARE DUCT 3 HEATER 291B ON COMMAND	B1	15	7	SCR-291-2	35427 - J61	I-091	TB9 +D231G	TB3 D1R	I-094	10 - 30 VDC	ON / OFF	-
1756-OB8EI DC (10-30V) ELECTRONICALLY FUSED ISOLATED OUTPUT MODULE															
35427B-DO-57	NB_SEC_ON_CMD	DO	NORTH BLOWER SECONDARY ON COMMAND	B1	16	0	NB-001	35427 - J43	I-098	TB9 +D231G	TB3 D1R	I-094	10 - 30 VDC	ON / OFF	-
35427B-DO-58	SB_SEC_ON_CMD	DO	SOUTH BLOWER SECONDARY ON COMMAND	B1	16	1	SB-003	35427 - J24	I-098	TB9 +D231A	TB3 D1R	I-094	10 - 30 VDC	ON / OFF	-
35427B-DO-59	STBYB_SEC_ON_CMD	DO	STANDBY BLOWER SECONDARY ON COMMAND	B1	16	2	RB-002	35427 - J26	I-098	TB9 +D231B	TB3 D1R	I-094	10 - 30 VDC	ON / OFF	-
35427B-DO-60	ICPS_B2_ON_CMD	DO	ICPS BLOWER 2 ON COMMAND	B1	16	3	LRB-005	35427 - J46	I-077	TB9 +D231D	TB3 D1R	I-094	10 - 30 VDC	ON / OFF	-
35427B-DO-61	CS_IT_HTR2_ON_CMD	DO	DUCT CS/IT HEATER 201B ON COMMAND	B1	16	4	SCR-201-2	35427 - J47	I-090	TB9 +D231E	TB3 D1R	I-094	10 - 30 VDC	ON / OFF	-
35427B-DO-62		DO		B1	16	5									
35427B-DO-63	CS_AFT_HTR2_ON_CMD	DO	DUCT CS/AFT HEATER 231B ON COMMAND	B1	16	6	SCR-231-2	35427 - J44	I-090	TB9 +D231F	TB3 D1R	I-094	10 - 30 VDC	ON / OFF	-
35427B-DO-64		DO		B1	16	7									

NOTES:

1. ALL CELLS MARKED TBD SHALL BE DETERMINED BY THE CONTRACTOR AFTER FINAL EQUIPMENT SELECTION.
2. ALL BLANK ROWS ARE SPARE I/O POINTS.
3. REFERENCE SHEET I-050 FOR ENCLOSURE 35427 CONTROLS ONE-LINES.
4. THE CONTRACTOR SHALL MODIFY THE EXISTING KGCS SOFTWARE AND PLC CONFIGURATION FOR USE IN THE CONTRACTOR PROVIDED REDUNDANT PLC SYSTEM IN ACCORDANCE WITH THE TAG INDEX TABLE ON THIS SHEET AND THE SEQUENCE OF OPERATIONS ON SHEETS I-102 THROUGH I-104.
5. CHANNEL ASSIGNMENTS FOR SPARE DUCTS ARE FOR INSTALL OPTION. THESE CHANNELS ARE DENOTED BY "†" SYMBOL.

SYM	ZONE	DESCRIPTION	DATE	APPROVED
REVISIONS				

JACOBS
Jacobs Technology Inc.

SIGNATURES		DATE
DRAWN	M. HENNIGH	3/07/14
CHECKED	J. WHITEFORD	3/07/14
SUBMITTED	S. RITTER	3/07/14
ST OF LICENSURE: TN LICENSE NO: 00110556		
APPROVED	G. WARD	3/07/14
	S. HUNT	3/07/14

NATIONAL AERONAUTICS AND SPACE ADMINISTRATION
JOHN F. KENNEDY SPACE CENTER, NASA
KENNEDY SPACE CENTER, FLORIDA

KSC LAUNCH PAD 39-B
ENVIRONMENTAL CONTROL SYSTEM (ECS) REFURBISHMENT
INSTRUMENTATION
ECS LP SYSTEM A1/B1 CHASSIS 35427
TAG INDEX SHEET 4

FILE NO.	SIZE	DWG.NO.	REV
	F	79K39602	
PCN. NO. 98898		SHEET 132 OF 187	

I-049

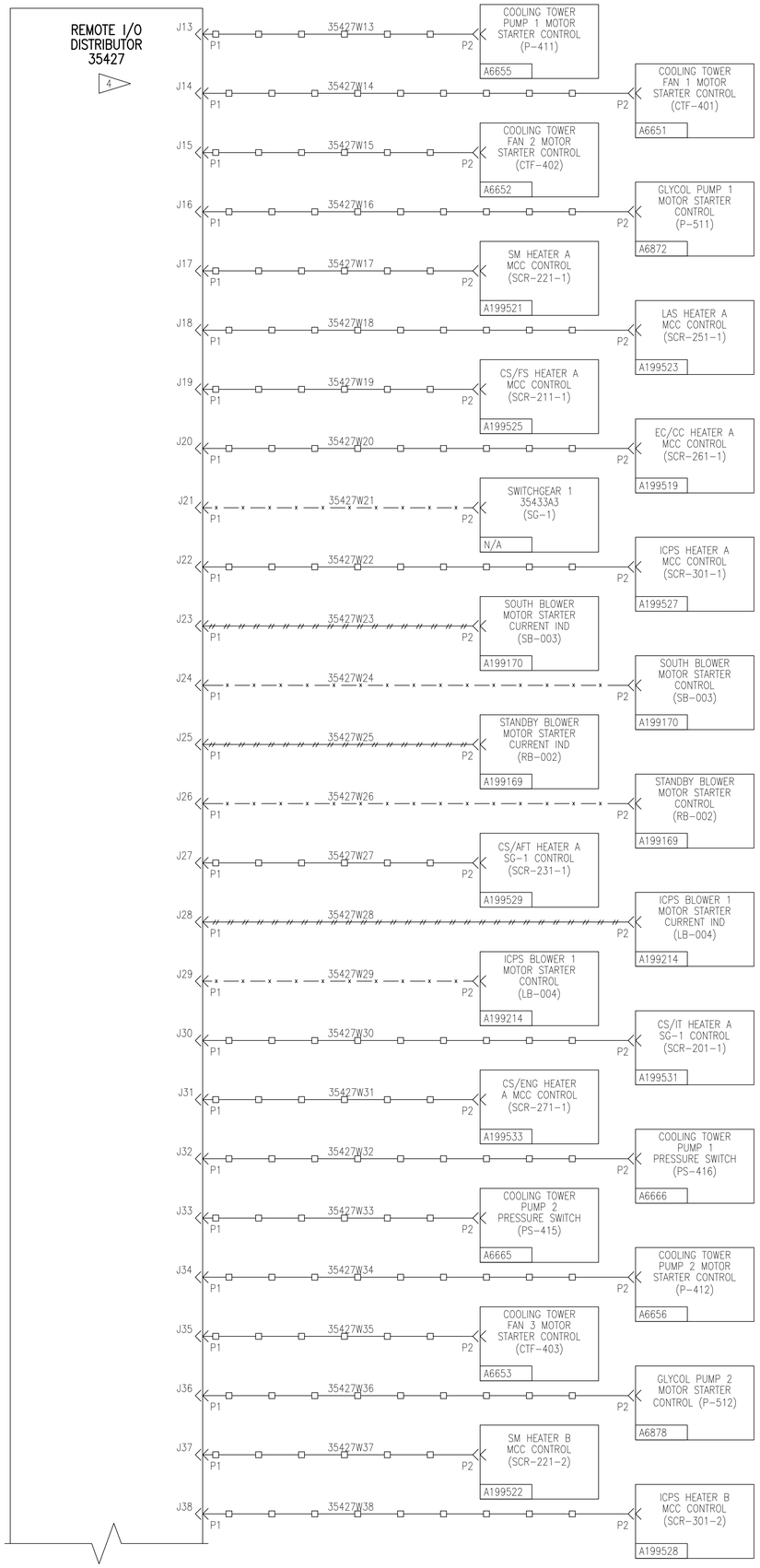

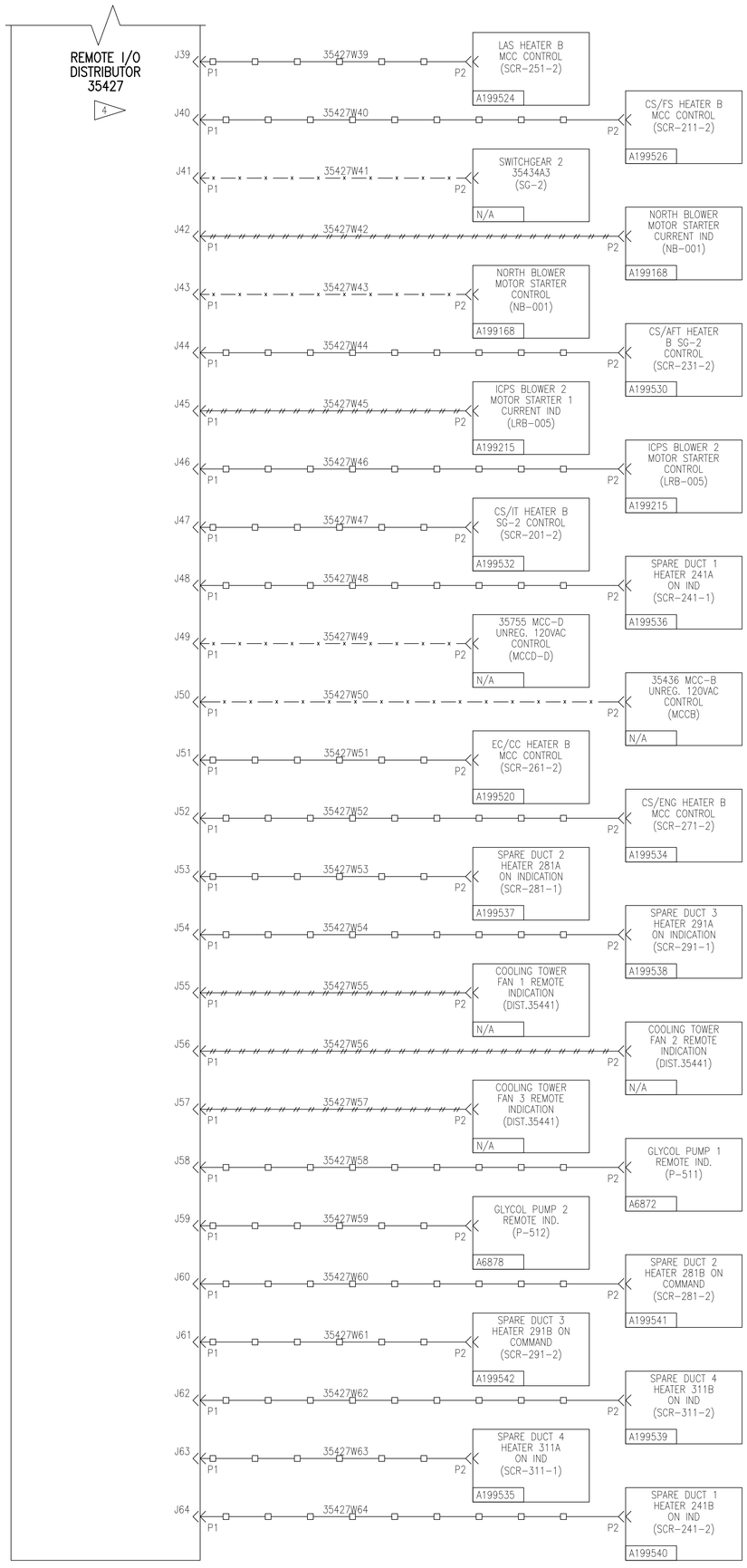

NOTES:

1. THE CONTRACTOR SHALL ADHERE TO THE FOLLOWING SPECIFICATIONS FOR ACCEPTABLE CABLE AND CONNECTOR TYPES, FABRICATION, AND INSTALLATION:
   - KSC-E-165
   - KSC-E-166
   - SSPC SP-1 GUIDELINES
   - NASA-STD-5008 (LATEST VERSION)
   - MIL-DTL-5541
   - 120E3100001 (HEAVY DUTY CABLE SPECIFICATION, GENERAL)
   - 120E3100003 (ELECTRICAL CABLE FABRICATION REQUIREMENTS)
2. THIS ONE-LINE DEPICTS FINAL CONNECTOR AND CABLING ARRANGEMENT AFTER THE REMOTE I/O CONNECTORS AND CABLING HAVE BEEN MODIFIED.
3. REFERENCE SHEETS I-014 AND I-015 FOR 28VDC POWER AND CONTROLNET CONNECTORS AND CABLING DETAILS.
4. UNLESS OTHERWISE NOTED EXISTING REMOTE I/O ENCLOSURE CABLES W13 THROUGH W50 SHALL BE REMOVED. THESE CABLES SHALL BE CAREFULLY COILED AND SAVED. THE CONTRACTOR MAY ELECT TO REUSE THESE CABLES. IN PLACE OF NEW CABLES FOR SIGNALS DESCRIBED IN ANY OF THE ONE-LINES CONTAINED WITHIN THE INSTRUMENTATION DRAWINGS. ALL CABLES THAT THE CONTRACTOR DECIDES TO REUSE MUST BE APPROVED BY THE NASA CONTRACTING OFFICER.
5. UNLESS OTHERWISE SPECIFIED ALL CABLING SHOWN ON THIS SHEET SHALL BE NEW. THESE CABLES SHALL BE PROVIDED BY AND INSTALLED BY THE CONTRACTOR.
6. REFERENCE SHEET I-101 FOR ADDITIONAL CABLE SPECIFICATION AND FABRICATION DETAILS.
7. REFERENCE NASA DOCUMENT 120E3100001, "SPECIFICATION FOR HEAVY DUTY GSE CABLE, GENERAL". ALL CABLES USED FOR THE INTERCONNECTION OF ECS EQUIPMENT AND ENCLOSURES SHALL CONFORM TO THESE SPECIFICATIONS.
8. REFERENCE APPENDIX A OF DOCUMENT 120E3100001 FOR INDIVIDUAL CABLE SPECIFICATIONS.

7 8 CABLE SPECIFICATION TABLE

LINE SYMBOL	CABLE SPECIFICATION
—□—□—	120E3100001-001
—//—//—//—	120E3100001-004
— — — — — —	120E3100001-051
—x—x—x—x—	120E3100001-006

SYM	ZONE	DESCRIPTION	DATE	APPROVED
REVISIONS				

JACOBS
Jacobs Technology Inc.

SIGNATURES		DATE
DRAWN	M. HENNIGH	3/07/14
CHECKED	J. WHITEFORD	3/07/14
SUBMITTED	S. RITTER	3/07/14
ST OF LICENSURE: TN LICENSE NO: 00110556		
APPROVED	G. WARD	3/07/14
	S. HUNT	3/07/14

NATIONAL AERONAUTICS AND SPACE ADMINISTRATION
JOHN F. KENNEDY SPACE CENTER, NASA
KENNEDY SPACE CENTER, FLORIDA

KSC LAUNCH PAD 39-B
ENVIRONMENTAL CONTROL SYSTEM (ECS) REFURBISHMENT
INSTRUMENTATION
ECS LP SYSTEM A1/B1 CHASSIS 35427
CONTROLS ONE-LINE

FILE NO.	SIZE	DWG.NO.	REV
	F	79K39602	
PCN. NO. 98898		SHEET 133 OF 187	

I-050

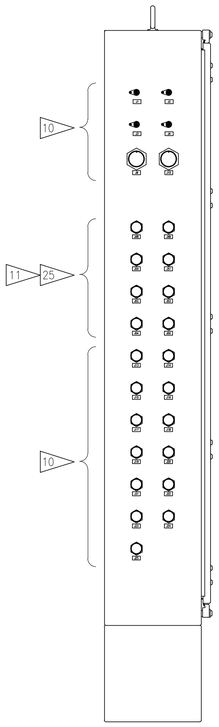

LEFT SIDE VIEW

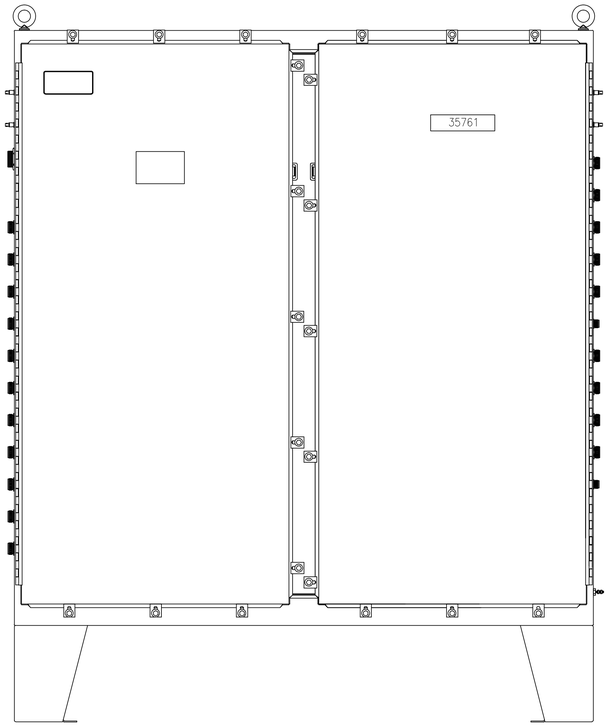

FRONT VIEW

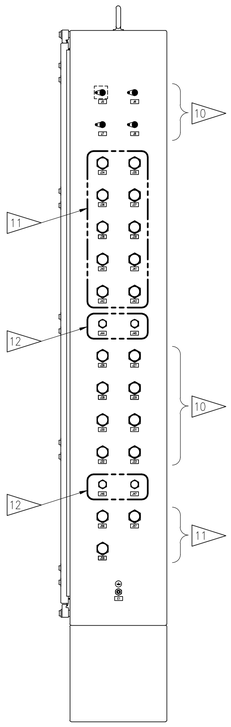

RIGHT SIDE VIEW

DETAIL 1
CONNECTOR MODIFICATIONS 15

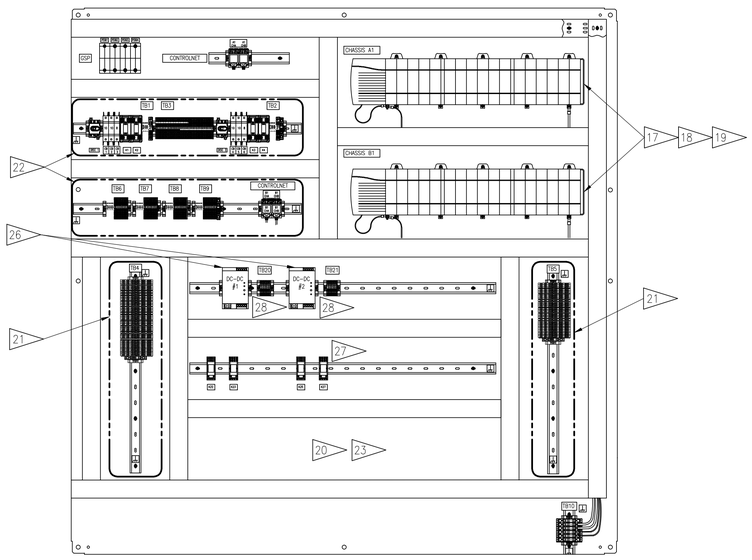

DETAIL 2
RIO ENCLOSURE MODIFICATIONS

DEMO & MODIFICATIONS NOTES:

GENERAL:

1. THIS SHEET DETAILS ALL OF THE CONNECTORS AND EQUIPMENT MODIFICATIONS REQUIRED FOR REMOTE I/O ENCLOSURE 35761.
2. CONTRACTOR SHALL BE RESPONSIBLE FOR ALL DEMOLITION, MODIFICATION, AND NEW EQUIPMENT INSTALLATION DETAILED ON SHEETS I-051 THROUGH I-057 FOR REMOTE I/O ENCLOSURE 35761.
3. UNLESS OTHERWISE SPECIFIED, FABRICATION/MODIFICATION OF ELECTRICAL GROUND SUPPORT EQUIPMENT SHALL BE IN ACCORDANCE WITH KSC-E-165 AND KSC-E-166.
4. UNLESS OTHERWISE SPECIFIED ALL WIRING, TERMINAL BLOCKS, AND ADDITIONAL EQUIPMENT SUPPLIED BY THE CONTRACTOR SHALL BE OF THE SAME TYPE AND MANUFACTURER AS CURRENTLY USED IN REMOTE I/O ENCLOSURE 35761.
5. ALL NEW EQUIPMENT SUPPLIED BY THE CONTRACTOR, AND USED FOR THE MODIFICATION OF REMOTE I/O ENCLOSURE 35761, SHALL BE APPROVED BY THE NASA CONTRACTING OFFICER BEFORE USE.
6. REFERENCE SHEET I-057 FOR CABLE ROUTING DETAILS BETWEEN REMOTE I/O ENCLOSURE 35761 AND FIELD DEVICES.

EXECUTION:

7. CONTRACTOR SHALL PROVIDE DETAILED DRAWINGS OF MODIFIED ENCLOSURES, DEVICE TERMINATIONS, AND WIRING.
8. NASA SHALL PROVIDE DRAWINGS OF EXISTING ENCLOSURE 35761 AFTER THE CONTRACT HAS BEEN AWARDED.
9. THE CONTRACTOR SHALL DETERMINE IF THE EXISTING REMOTE I/O ENCLOSURE 35761 SHALL BE MODIFIED IN THE FIELD OR REMOVED FROM THE SITE TO BE MODIFIED AT THE CONTRACTORS FABRICATION SHOP. FIELD MODIFICATION OR REMOVAL SHALL BE APPROVED BY THE NASA CONTRACTING OFFICER.

ENCLOSURE CONNECTORS:

10. CONNECTORS J1 THROUGH J10 AND J13 THROUGH J33 SHALL REMAIN AS IS AND DO NOT REQUIRE DEMOLITION OR MODIFICATION.
11. THE CONTRACTOR SHALL SUPPLY AND INSTALL NEW CONNECTORS J34 THROUGH J43, J48 THROUGH J55 AND J56 THROUGH J58. THESE JAM-NUT RECEPTACLES ARE OF TYPE D38999/24SE8SN.
12. THE CONTRACTOR SHALL SUPPLY AND INSTALL NEW CONNECTORS J44, J45, J46, AND J47. THESE JAM-NUT RECEPTACLES ARE OF TYPE D38999/24SB2SN.
13. ALL CONNECTORS REQUIRE SAFETY WIRE IN ACCORDANCE WITH AIA/NAS NASM33540. SAFETY WIRE MATERIAL SHALL BE PER AIA/NAS NASM20995 TYPE C (SST).
14. THE CONTRACTOR SHALL INSTALL AND POT ALL CONNECTORS IN ACCORDANCE WITH MIL-DTL-38999 AND KSC-STD-132.
15. THE CONTRACTOR SHALL SUPPLY AND INSTALL DUST-CAPS FOR ALL SPARE AND UNUSED CONNECTORS.
16. REFERENCE CONNECTOR ALLOCATION TABLE ON SHEET I-052 FOR CONNECTOR DETAILS.

PLC MODULES:

17. THE CONTRACTOR SHALL DEMO SLOT FILLERS FOR SYSTEMS A1 AND B1 SLOTS 2, AND 3. THE CONTRACTOR SHALL THEN SUPPLY AND INSTALL NEW ALLEN BRADLEY 1756-IF6I ANALOG INPUT MODULES INTO EACH OF THE 4 SLOTS. THE CONTRACTOR SHALL SUPPLY AND INSTALL THE 1756-TBSH RTB CARD CONNECTORS FOR EACH OF THE 4 MODULES.
18. THE CONTRACTOR SHALL DEMO THE 1756-IR6I RTD MODULES FOR SYSTEMS A1 AND B1 IN SLOT 6. THE CONTRACTOR SHALL THEN SUPPLY AND INSTALL NEW ALLEN BRADLEY 1756-IF6I ANALOG INPUT MODULES INTO EACH SLOT 6 FOR SYSTEMS A1 AND B1. THE CONTRACTOR SHALL SUPPLY AND INSTALL THE 1756-TBSH RTB CONNECTORS FOR BOTH OF THE SLOT 6 MODULES.
19. THE CONTRACTOR SHALL DEMO THE EXISTING 1756-OF8 MODULES FOR SYSTEM A1 AND B1, IN SLOT 7. THE CONTRACTOR SHALL THEN SUPPLY AND INSTALL NEW ALLEN BRADLEY 1756-IF6I ANALOG INPUT MODULES INTO EACH OF THE 2 SLOTS. THE CONTRACTOR SHALL SUPPLY AND INSTALL THE 1756-TBSH RTB CARD CONNECTORS FOR EACH OF THE 2 MODULES.

ENCLOSURE WIRING:

20. CONTRACTOR SHALL USE SHEETS I-051 THROUGH I-057 AND I-075 THROUGH I-101 TO VERIFY AND/OR MODIFY:
    - ALL 28VDC DISTRIBUTION WIRING.
    - ALL WIRING BETWEEN PLC AND FIELD INTERFACE TERMINAL BLOCKS.
    - ALL WIRING BETWEEN ENCLOSURE CONNECTORS AND FIELD INTERFACE TERMINAL BLOCKS.
21. CONTRACTOR SHALL SUPPLY AND INSTALL ANY ADDITIONAL FIELD INTERFACE TERMINAL BLOCKS REQUIRED TO TERMINATE ALL SIGNALS AND WIRING BETWEEN PLC'S AND ENCLOSURE INTERFACE CONNECTORS.
22. CONTRACTOR SHALL SUPPLY AND INSTALL ANY ADDITIONAL POWER TERMINAL BLOCKS REQUIRED TO CONNECT THE 28VDC SUPPLY TO THE PLC'S, FIELD INTERFACE TERMINAL BLOCKS, AND/OR ENCLOSURE INTERFACE CONNECTORS.
23. CONTRACTOR SHALL SUPPLY AND INSTALL ANY ADDITIONAL ENCLOSURE WIRING REQUIRED TO CONNECT ALL SIGNALS BETWEEN PLC'S AND ENCLOSURE INTERFACE CONNECTORS.
24. ALL WIRING FROM ENCLOSURE INTERFACE CONNECTORS SHALL BE LANDED ON THE FIELD INTERFACE TERMINAL BLOCKS BEFORE TERMINATING TO THE PLC OR OTHER INTERNAL ENCLOSURE DEVICES.

SPARE DUCT OPTION:

25. IF SPARE DUCT OPTION IS INSTALLED, THE CONTRACTOR SHALL SUPPLY AND INSTALL ALL CABLES AND CONNECTORS TO CONNECT FIELD DEVICES TO ENCLOSURE CONNECTORS J48 THROUGH J55, AND THE CONTRACTOR WILL NOT HAVE TO SUPPLY PROTECTIVE DUST CAPS. REFERENCE SHEET I-052.

MISCELLANEOUS:

26. 28VDC-24VDC DC-DC CONVERTERS SHALL BE INSTALLED IN 35426. THESE CONVERTERS SHALL SUPPLY 24VDC COMMAND POWER TO ALL STEAM SOLENOIDS SERVICED FROM THIS ENCLOSURE. THESE DC-DC CONVERTERS ARE OF SIMILAR TYPE TO PHOENIX CONTACT 24VDC/24VDC, 10A PART NUMBER 2320092. FINAL SELECTION OF THE DC-DC CONVERTER SHALL BE APPROVED BY THE NASA CONTRACTING OFFICER.
27. ISOLATION RELAYS K-22 THROUGH K-27 ARE DIN RAIL MOUNT GENERAL PURPOSE RELAYS. THESE RELAYS SHALL HAVE 28VDC COILS AND ONE SET OF FORM C CONTACTS CAPABLE OF CARRYING A MINIMUM CURRENT OF 5A @ 24VDC. ALL RELAYS MUST BE APPROVED BY THE NASA CONTRACTING OFFICER.
28. TERMINAL BLOCKS SHALL BE OF TYPE PHOENIX CONTACT ST-4 SPRING CAGE FEED THROUGH TERMINAL BLOCK OR APPROVED EQUAL.

SYM	ZONE	DESCRIPTION	DATE	APPROVED
		REVISIONS		

JACOBS
Jacobs Technology Inc.

SIGNATURES		DATE
DRAWN	M. HENNIGH	3/07/14
CHECKED	J. WHITEFORD	3/07/14
SUBMITTED	S. RITTER	3/07/14
ST OF LICENSURE: TN LICENSE NO: 00110556		
APPROVED	G. WARD	3/07/14
	S. HUNT	3/07/14

NATIONAL AERONAUTICS AND SPACE ADMINISTRATION
JOHN F. KENNEDY SPACE CENTER, NASA
KENNEDY SPACE CENTER, FLORIDA

KSC LAUNCH PAD 39-B
ENVIRONMENTAL CONTROL SYSTEM (ECS) REFURBISHMENT
INSTRUMENTATION
ECS LP SYSTEM A1/B1 CHASSIS 35761
DEMOLITION & MODIFICATION SHEET 1

I-051

FILE NO.	SIZE F	DWG.NO.	REV
		79K39602	
PCN. NO. 98898		SHEET 134 OF 187	

1 ECS RIO CABINET 35761 CONNECTOR ALLOCATION TABLE

ENCLOSURE CONNECTOR	ENCLOSURE CONNECTOR TYPE (JAMNUT RECEPTACLE)	MATING CONNECTOR (PLUG)	DESCRIPTION	DISPOSITION
J1	ADBJ79-E1-UBJ20	PL75	CONTROLNET IN PLC B1 CHA	NO MODIFICATION
J2	ADBJ79-E1-UBJ20	PL75	CONTROLNET IN PLC B1 CHB	NO MODIFICATION
J3	ADBJ79-E1-UBJ20	PL75	CONTROLNET IN PLC A1 CHB	NO MODIFICATION
J4	ADBJ79-E1-UBJ20	PL75	CONTROLNET IN PLC A1 CHA	NO MODIFICATION
J5	ADBJ79-E1-UBJ20	PL75	CONTROLNET IN PLC A1 CHA	NO MODIFICATION
J6	ADBJ79-E1-UBJ20	PL75	CONTROLNET IN PLC A1 CHB	NO MODIFICATION
J7	ADBJ79-E1-UBJ20	PL75	CONTROLNET IN PLC B1 CHA	NO MODIFICATION
J8	ADBJ79-E1-UBJ20	PL75	CONTROLNET IN PLC B1 CHB	NO MODIFICATION
J9	MS3454LS32-1P	MS3456LS32-1S	28VDC POWER INPUT SYSTEM A	NO MODIFICATION
J10	MS3454LS32-1P	MS3456LS32-1S	28VDC POWER INPUT SYSTEM B	NO MODIFICATION
J13	D38999 / 24SE8SN	D38999 / 26SE8PN	CONNECTOR REUSED FOR MT-104A	MODIFY / VERIFY WIRING BACK TO FIELD INTERFACE TERMINAL BLOCKS
J14	D38999 / 24SE8SN	D38999 / 26SE8PN	CONNECTOR REUSED FOR MT-104B	MODIFY / VERIFY WIRING BACK TO FIELD INTERFACE TERMINAL BLOCKS
J15	D38999 / 24SE8SN	D38999 / 26SE8PN	CONNECTOR REUSED FOR MT-114A	MODIFY / VERIFY WIRING BACK TO FIELD INTERFACE TERMINAL BLOCKS
J16	D38999 / 24SE8SN	D38999 / 26SE8PN	CONNECTOR REUSED FOR MT-216B / TT-216B	MODIFY / VERIFY WIRING BACK TO FIELD INTERFACE TERMINAL BLOCKS
J17	D38999 / 24SE8SN	D38999 / 26SE8PN	CONNECTOR REUSED FOR MT-216A / TT-216A	MODIFY / VERIFY WIRING BACK TO FIELD INTERFACE TERMINAL BLOCKS
J18	D38999 / 24SE8SN	D38999 / 26SE8PN	CONNECTOR REUSED FOR MT-206A / TT-206A	MODIFY / VERIFY WIRING BACK TO FIELD INTERFACE TERMINAL BLOCKS
J19	D38999 / 24SE8SN	D38999 / 26SE8PN	CONNECTOR REUSED FOR MT-206B / TT-206B	MODIFY / VERIFY WIRING BACK TO FIELD INTERFACE TERMINAL BLOCKS
J20	D38999 / 24SE8SN	D38999 / 26SE8PN	CONNECTOR REUSED FOR MT-114B	MODIFY / VERIFY WIRING BACK TO FIELD INTERFACE TERMINAL BLOCKS
J21	D38999 / 24SE8SN	D38999 / 26SE8PN	CONNECTOR REUSED FOR MT-276A / TT-276A	MODIFY / VERIFY WIRING BACK TO FIELD INTERFACE TERMINAL BLOCKS
J22	D38999 / 24SE8SN	D38999 / 26SE8PN	CONNECTOR REUSED FOR MT-226B / TT-226B	MODIFY / VERIFY WIRING BACK TO FIELD INTERFACE TERMINAL BLOCKS
J23	D38999 / 24SE8SN	D38999 / 26SE8PN	CONNECTOR REUSED FOR MT-226A / TT-226A	MODIFY / VERIFY WIRING BACK TO FIELD INTERFACE TERMINAL BLOCKS
J24	D38999 / 24SE8SN	D38999 / 26SE8PN	CONNECTOR REUSED FOR MT-306A / TT-306A	MODIFY / VERIFY WIRING BACK TO FIELD INTERFACE TERMINAL BLOCKS
J25	D38999 / 24SE8SN	D38999 / 26SE8PN	CONNECTOR REUSED FOR MT-236A / TT-236A	MODIFY / VERIFY WIRING BACK TO FIELD INTERFACE TERMINAL BLOCKS
J26	D38999 / 24SE8SN	D38999 / 26SE8PN	CONNECTOR REUSED FOR MT-236B / TT-236B	MODIFY / VERIFY WIRING BACK TO FIELD INTERFACE TERMINAL BLOCKS
J27	D38999 / 24SE8SN	D38999 / 26SE8PN	CONNECTOR REUSED FOR MT-256A / TT-256A	MODIFY / VERIFY WIRING BACK TO FIELD INTERFACE TERMINAL BLOCKS
J28	D38999 / 24SE8SN	D38999 / 26SE8PN	CONNECTOR REUSED FOR MT-256B / TT-256B	MODIFY / VERIFY WIRING BACK TO FIELD INTERFACE TERMINAL BLOCKS
J29	D38999 / 24SE8SN	D38999 / 26SE8PN	SPARE	PROVIDE AND INSTALL DUST CAP
J30	D38999 / 24SE8SN	D38999 / 26SE8PN	CONNECTOR REUSED FOR MT-276B / TT-276B	MODIFY / VERIFY WIRING BACK TO FIELD INTERFACE TERMINAL BLOCKS
J31	D38999 / 24SE8SN	D38999 / 26SE8PN	CONNECTOR REUSED FOR MT-266A / TT-266A	MODIFY / VERIFY WIRING BACK TO FIELD INTERFACE TERMINAL BLOCKS
J32	D38999 / 24SE8SN	D38999 / 26SE8PN	CONNECTOR REUSED FOR MT-266B / TT-266B	MODIFY / VERIFY WIRING BACK TO FIELD INTERFACE TERMINAL BLOCKS
J33	D38999 / 24SE8SN	D38999 / 26SE8PN	CONNECTOR REUSED FOR MT-306B / TT-306B	MODIFY / VERIFY WIRING BACK TO FIELD INTERFACE TERMINAL BLOCKS
J34	D38999 / 24SE8SN	D38999 / 26SE8PN	CONNECTOR USED FOR MT-124A	PROVIDE AND INSTALL NEW CONNECTOR, WIRING, AND TERMINAL BLOCKS
J35	D38999 / 24SE8SN	D38999 / 26SE8PN	CONNECTOR USED FOR MT-124B	PROVIDE AND INSTALL NEW CONNECTOR, WIRING, AND TERMINAL BLOCKS
J36	D38999 / 24SE8SN	D38999 / 26SE8PN	CONNECTOR USED FOR DPT-237A	PROVIDE AND INSTALL NEW CONNECTOR, WIRING, AND TERMINAL BLOCKS
J37	D38999 / 24SE8SN	D38999 / 26SE8PN	CONNECTOR USED FOR DPT-237B	PROVIDE AND INSTALL NEW CONNECTOR, WIRING, AND TERMINAL BLOCKS
J38	D38999 / 24SE8SN	D38999 / 26SE8PN	CONNECTOR USED FOR PT-238A	PROVIDE AND INSTALL NEW CONNECTOR, WIRING, AND TERMINAL BLOCKS
J39	D38999 / 24SE8SN	D38999 / 26SE8PN	CONNECTOR USED FOR PT-238B	PROVIDE AND INSTALL NEW CONNECTOR, WIRING, AND TERMINAL BLOCKS
J40	D38999 / 24SE8SN	D38999 / 26SE8PN	CONNECTOR USED FOR DPT-257A	PROVIDE AND INSTALL NEW CONNECTOR, WIRING, AND TERMINAL BLOCKS
J41	D38999 / 24SE8SN	D38999 / 26SE8PN	CONNECTOR USED FOR DPT-257B	PROVIDE AND INSTALL NEW CONNECTOR, WIRING, AND TERMINAL BLOCKS
J42	D38999 / 24SE8SN	D38999 / 26SE8PN	CONNECTOR USED FOR PT-258A	PROVIDE AND INSTALL NEW CONNECTOR, WIRING, AND TERMINAL BLOCKS
J43	D38999 / 24SE8SN	D38999 / 26SE8PN	CONNECTOR USED FOR PT-258B	PROVIDE AND INSTALL NEW CONNECTOR, WIRING, AND TERMINAL BLOCKS
J44	D38999 / 24SE8SN	D38999 / 26SE8PN	CONNECTOR USED FOR SOV-274A	PROVIDE AND INSTALL NEW CONNECTOR, WIRING, AND TERMINAL BLOCKS
J45	D38999 / 24SE8SN	D38999 / 26SE8PN	CONNECTOR USED FOR SOV-274B	PROVIDE AND INSTALL NEW CONNECTOR, WIRING, AND TERMINAL BLOCKS
J46	D38999 / 24SE8SN	D38999 / 26SE8PN	CONNECTOR USED FOR SOV-304A	PROVIDE AND INSTALL NEW CONNECTOR, WIRING, AND TERMINAL BLOCKS
J47	D38999 / 24SE8SN	D38999 / 26SE8PN	CONNECTOR USED FOR SOV-304B	PROVIDE AND INSTALL NEW CONNECTOR, WIRING, AND TERMINAL BLOCKS
J48	D38999 / 24SE8SN	D38999 / 26SE8PN	CONNECTOR REUSED FOR MT-246A / TT-246A (INSTALL OPTION)	PROVIDE AND INSTALL NEW CONNECTOR, WIRING, AND TERMINAL BLOCKS
J49	D38999 / 24SE8SN	D38999 / 26SE8PN	CONNECTOR REUSED FOR MT-286A / TT-286A (INSTALL OPTION)	PROVIDE AND INSTALL NEW CONNECTOR, WIRING, AND TERMINAL BLOCKS
J50	D38999 / 24SE8SN	D38999 / 26SE8PN	CONNECTOR REUSED FOR MT-296A / TT-296A (INSTALL OPTION)	PROVIDE AND INSTALL NEW CONNECTOR, WIRING, AND TERMINAL BLOCKS
J51	D38999 / 24SE8SN	D38999 / 26SE8PN	CONNECTOR REUSED FOR MT-316A / TT-316A (INSTALL OPTION)	PROVIDE AND INSTALL NEW CONNECTOR, WIRING, AND TERMINAL BLOCKS
J52	D38999 / 24SE8SN	D38999 / 26SE8PN	CONNECTOR REUSED FOR MT-246B / TT-246B (INSTALL OPTION)	PROVIDE AND INSTALL NEW CONNECTOR, WIRING, AND TERMINAL BLOCKS
J53	D38999 / 24SE8SN	D38999 / 26SE8PN	CONNECTOR REUSED FOR MT-286B / TT-286B (INSTALL OPTION)	PROVIDE AND INSTALL NEW CONNECTOR, WIRING, AND TERMINAL BLOCKS
J54	D38999 / 24SE8SN	D38999 / 26SE8PN	CONNECTOR REUSED FOR MT-296B / TT-296B (INSTALL OPTION)	PROVIDE AND INSTALL NEW CONNECTOR, WIRING, AND TERMINAL BLOCKS
J55	D38999 / 24SE8SN	D38999 / 26SE8PN	CONNECTOR REUSED FOR MT-316B / TT-316B (INSTALL OPTION)	PROVIDE AND INSTALL NEW CONNECTOR, WIRING, AND TERMINAL BLOCKS
J56	D38999 / 24S82SN	D38999 / 26S82PN	CONNECTOR USED FOR CTF-401	PROVIDE AND INSTALL NEW CONNECTOR, WIRING, AND TERMINAL BLOCKS
J57	D38999 / 24S82SN	D38999 / 26S82PN	CONNECTOR USED FOR CTF-402	PROVIDE AND INSTALL NEW CONNECTOR, WIRING, AND TERMINAL BLOCKS
J58	D38999 / 24S82SN	D38999 / 26S82PN	CONNECTOR USED FOR CTF-403	PROVIDE AND INSTALL NEW CONNECTOR, WIRING, AND TERMINAL BLOCKS

2 RIO CABINET 35761 DC DEVICE POWER SCHEDULE

POWER SYSTEM FEED (A OR B)	MAIN DC POWER BUS	CABINET TB DESIGNATION	SECONDARY DC POWER BUS	CABINET TB DESIGNATION	CABINET INTERFACE CONNECTOR	DEVICE POWERED	REF. SHEET
GSP SYSTEM A	INSTRUMENT POWER BUS +D120	TB-6 (1 THRU 5)	D130A	TB6-6	35761 - J36 35761 - J18 35761 - J34	DPT-237A MT/TT-206A MT-124A	I-097 I-087 I-087
			D130B	TB6-7	35761 - J40 35761 - J17 35761 - J21	DPT-257A MT/TT-216A MT/TT-276A	I-097 I-087 I-087
			D130C	TB6-8	35761 - J38 35761 - J23 35761 - J27	PT-238A MT/TT-226A MT/TT-256A	I-097 I-087 I-087
			D130D	TB6-9	35761 - J42 35761 - J25 35761 - J31	PT-258A MT/TT-236A MT/TT-266A	I-097 I-087 I-087
			D130E	TB6-10	35761 - J24 35761 - J51	MT/TT-306A MT/TT-316A	I-087 I-087
			D130F	TB6-11	35761 - J48 35761 - J56	MT/TT-246A CTF-401	I-087 I-083
			D130G	TB6-12	35761 - J49 35761 - J58	MT/TT-286A CTF-403	I-087 I-083
			D130H	TB6-13	35761 - J13 35761 - J15 35761 - J50	MT-104A MT-114A MT/TT-296A	I-087 I-087 I-087
	CONTROL POWER BUS +D121	TB-7 (1 THRU 5)	D131A	TB7-6	N/A	DC-DC #1	I-089
			D131B	TB7-7			
			D131C	TB7-8			
			D131D	TB7-9			
			D131E	TB7-10	35761 - J44	SOV-274A	I-089
			D131F	TB7-11	35761 - J46	SOV-304A	I-089
			D131G	TB7-12			
			D131H	TB7-13			
GSP SYSTEM B	INSTRUMENT POWER BUS +D220	TB-8 (1 THRU 5)	D230A	TB8-6	35761 - J35 35761 - J37 35761 - J19	MT-124B DPT-237B MT/TT-206B	I-087 I-097 I-087
			D230B	TB8-7	35761 - J41 35761 - J16 35761 - J30	DPT-257B MT/TT-216B MT/TT-276B	I-097 I-087 I-087
			D230C	TB8-8	35761 - J39 35761 - J22 35761 - J28	PT-238B MT/TT-226B MT/TT-256B	I-097 I-087 I-087
			D230D	TB8-9	35761 - J43 35761 - J26 35761 - J32	PT-258B MT/TT-236B MT/TT-266B	I-097 I-087 I-087
			D230E	TB8-10	35761 - J33 35761 - J55	MT/TT-306B MT/TT-316B	I-087 I-087
			D230F	TB8-11	35761 - J52 35761 - J57	MT/TT-246B CTF-402	I-087 I-083
			D230G	TB8-12	35761 - J53	MT/TT-286B	I-087
			D230H	TB8-13	35761 - J14 35761 - J20 35761 - J54	MT-104B MT-114B MT/TT-296B	I-087 I-087 I-087
	CONTROL POWER BUS +D221	TB-9 (1 THRU 5)	D231A	TB9-6	N/A	DC-DC #2	I-089
			D231B	TB9-7			
			D231C	TB9-8			
			D231D	TB9-9			
			D231E	TB9-10	35761 - J45	SOV-274B	I-089
			D231F	TB9-11	35761 - J47	SOV-304B	I-089
			D231G	TB9-12			
			D231H	TB9-13			

DEMO & MODIFICATION NOTES:

GENERAL:

1. THE CONNECTOR ALLOCATION TABLE DETAILS CONNECTOR TYPES AND EQUIPMENT INTERCONNECTIONS.
2. THIS 28VDC DISTRIBUTION TABLE DETAILS ALL DEVICES, CONNECTIONS TO REMOTE I/O ENCLOSURE 35761, WHICH REQUIRE 28VDC SOURCE POWER.

SYM	ZONE	DESCRIPTION	DATE	APPROVED
REVISIONS				

JACOBS
Jacobs Technology Inc.

SIGNATURES		DATE
DRAWN	M. HENNIGH	3/07/14
CHECKED	J. WHITEFORD	3/07/14
SUBMITTED	S. RITTER	3/07/14
ST OF LICENSURE: TN LICENSE NO: 00110556		
APPROVED	G. WARD	3/07/14
	S. HUNT	3/07/14

NATIONAL AERONAUTICS AND SPACE ADMINISTRATION
JOHN F. KENNEDY SPACE CENTER, NASA
KENNEDY SPACE CENTER, FLORIDA

KSC LAUNCH PAD 39-B
ENVIRONMENTAL CONTROL SYSTEM (ECS) REFURBISHMENT
INSTRUMENTATION
ECS LP SYSTEM A1/B1 CHASSIS 35761
DEMOLITION & MODIFICATION SHEET 2

FILE NO.	SIZE	DWG.NO.	REV
	F	79K39602	
PCN. NO. 98898		SHEET 135 OF 187	

I-052

ECS RIO CABINET 35761 SYSTEM A1

IDENT	TAG NAME	I/O TYPE	DESCRIPTION	RACK	SLOT	CH	DEVICE TAG	ENCLOSURE INTERFACE CONNECTOR	DEVICE REFERENCE SCHEMATIC	POWER SOURCE/BUS	POWER RETURN/ NEUTRAL	POWER REFERENCE SCHEMATIC	SIGNAL TYPE	SENSOR RANGE	UNITS
1756-IF6I ISOLATED ANALOG VOLTAGE/CURRENT INPUT MODULE															
35761A-AI-1	35761_GSP_SYSA_SUP_V	AI	35761 GSP BUS A VDC (SUPPLY VOLTAGE = SIGNAL x 4)	A1	1	0	R2	N/A	I-093	N/A	TB3 D1R	I-093	0 - 10 VDC	0 - 10	VDC
35761A-AI-2		AI		A1	1	1									
35761A-AI-3		AI		A1	1	2									
35761A-AI-4		AI		A1	1	3									
35761A-AI-5		AI		A1	1	4									
35761A-AI-6		AI		A1	1	5									
1756-IF6I ISOLATED ANALOG VOLTAGE/CURRENT INPUT MODULE															
35761A-AI-7	CS_IT_PRI_HUM_SIG	AI	DUCT CS/IT PRIMARY HUMIDITY SIGNAL	A1	2	0	MT-206A	35761 - J18	I-087	I/O CHAN	I/O CHAN	-	4 - 20mA	0 - 100	%RH
35761A-AI-8	CS_FS_PRI_HUM_SIG	AI	DUCT CS/FS PRIMARY HUMIDITY SIGNAL	A1	2	1	MT-216A	35761 - J17	I-087	I/O CHAN	I/O CHAN	-	4 - 20mA	0 - 100	%RH
35761A-AI-9	SM_PRI_HUM_SIG	AI	DUCT SM PRIMARY HUMIDITY SIGNAL	A1	2	2	MT-226A	35761 - J23	I-087	I/O CHAN	I/O CHAN	-	4 - 20mA	0 - 100	%RH
35761A-AI-10	CS_AFT_PRI_HUM_SIG	AI	DUCT CS/AFT PRIMARY HUMIDITY SIGNAL	A1	2	3	MT-236A	35761 - J25	I-087	I/O CHAN	I/O CHAN	-	4 - 20mA	0 - 100	%RH
† 35761A-AI-11	SPARE1_PRI_HUM_SIG	AI	SPARE DUCT 1 PRIMARY HUMIDITY SIGNAL	A1	2	4	MT-246A	35761 - J48	I-087	I/O CHAN	I/O CHAN	-	4 - 20mA	0 - 100	%RH
35761A-AI-12	LAS_PRI_HUM_SIG	AI	DUCT LAS PRIMARY HUMIDITY SIGNAL	A1	2	5	MT-256A	35761 - J27	I-087	I/O CHAN	I/O CHAN	-	4 - 20mA	0 - 100	%RH
1756-IF6I ISOLATED ANALOG VOLTAGE/CURRENT INPUT MODULE															
35761A-AI-13	EC_CC_PRI_HUM_SIG	AI	DUCT EC/CC PRIMARY HUMIDITY SIGNAL	A1	3	0	MT-266A	35761 - J31	I-087	I/O CHAN	I/O CHAN	-	4 - 20mA	0 - 100	%RH
35761A-AI-14	CS_ENG_PRI_HUM_SIG	AI	DUCT CS/ENG PRIMARY HUMIDITY SIGNAL	A1	3	1	MT-276A	35761 - J21	I-087	I/O CHAN	I/O CHAN	-	4 - 20mA	0 - 100	%RH
† 35761A-AI-15	SPARE2_PRI_HUM_SIG	AI	SPARE DUCT 2 PRIMARY HUMIDITY SIGNAL	A1	3	2	MT-286A	35761 - J49	I-087	I/O CHAN	I/O CHAN	-	4 - 20mA	0 - 100	%RH
† 35761A-AI-16	SPARE3_PRI_HUM_SIG	AI	SPARE DUCT 3 PRIMARY HUMIDITY SIGNAL	A1	3	3	MT-296A	35761 - J50	I-087	I/O CHAN	I/O CHAN	-	4 - 20mA	0 - 100	%RH
35761A-AI-17	ICPS_PRI_HUM_SIG	AI	DUCT ICPS PRIMARY HUMIDITY SIGNAL	A1	3	4	MT-306A	35761 - J24	I-087	I/O CHAN	I/O CHAN	-	4 - 20mA	0 - 100	%RH
† 35761A-AI-18	SPARE4_PRI_HUM_SIG	AI	SPARE DUCT 4 PRIMARY HUMIDITY SIGNAL	A1	3	5	MT-316A	35761 - J51	I-087	I/O CHAN	I/O CHAN	-	4 - 20mA	0 - 100	%RH
1756-IF6I ISOLATED ANALOG VOLTAGE/CURRENT INPUT MODULE															
35761A-AI-19	CS_IT_PRI_TEMP_SIG	AI	DUCT CS/IT PRIMARY TEMPERATURE SIGNAL	A1	4	0	TT-206A	35761 - J18	I-087	I/O CHAN	I/O CHAN	-	4 - 20mA	35 - 200	DEG F
35761A-AI-20	CS_FS_PRI_TEMP_SIG	AI	DUCT CS/FS PRIMARY TEMPERATURE SIGNAL	A1	4	1	TT-216A	35761 - J17	I-087	I/O CHAN	I/O CHAN	-	4 - 20mA	35 - 200	DEG F
35761A-AI-21	SM_PRI_TEMP_SIG	AI	DUCT SM PRIMARY TEMPERATURE SIGNAL	A1	4	2	TT-226A	35761 - J23	I-087	I/O CHAN	I/O CHAN	-	4 - 20mA	35 - 200	DEG F
35761A-AI-22	CS_AFT_PRI_TEMP_SIG	AI	DUCT CS/AFT PRIMARY TEMPERATURE SIGNAL	A1	4	3	TT-236A	35761 - J25	I-087	I/O CHAN	I/O CHAN	-	4 - 20mA	35 - 200	DEG F
† 35761A-AI-23	SPARE1_PRI_TEMP_SIG	AI	SPARE DUCT 1 PRIMARY TEMPERATURE SIGNAL	A1	4	4	TT-246A	35761 - J48	I-087	I/O CHAN	I/O CHAN	-	4 - 20mA	35 - 200	DEG F
35761A-AI-24	LAS_PRI_TEMP_SIG	AI	DUCT LAS PRIMARY TEMPERATURE SIGNAL	A1	4	5	TT-256A	35761 - J27	I-087	I/O CHAN	I/O CHAN	-	4 - 20mA	35 - 200	DEG F
1756-IF6I ISOLATED ANALOG VOLTAGE/CURRENT INPUT MODULE															
35761A-AI-25	N_CC_COIL_PRI_HUM_SIG	AI	NORTH COOLING CHAMBER COLD COIL PRIMARY HUMIDITY SIGNAL	A1	5	0	MT-104A	35761 - J13	I-087	I/O CHAN	I/O CHAN	-	4 - 20mA	0 - 100	%RH
35761A-AI-26	S_CC_COIL_PRI_HUM_SIG	AI	SOUTH COOLING CHAMBER COLD COIL PRIMARY HUMIDITY SIGNAL	A1	5	1	MT-114A	35761 - J15	I-087	I/O CHAN	I/O CHAN	-	4 - 20mA	0 - 100	%RH
35761A-AI-27	ICPS_CC_COIL_PRI_HUM_SIG	AI	ICPS COOLING CHAMBER COLD COIL PRIMARY HUMIDITY SIGNAL	A1	5	2	MT-124A	35761 - J34	I-087	I/O CHAN	I/O CHAN	-	4 - 20mA	0 - 100	%RH
35761A-AI-28	CT_FAN1_PRI_SPD_IND	AI	COOLING TOWER FAN 1 PRIMARY SPEED INDICATION	A1	5	3	CTF-401	35761 - J56	I-083	TB6 +D130F	TB3 D1R	I-094	4 - 20mA	0 - 100	%RPM
35761A-AI-29	CT_FAN2_SEC_SPD_IND	AI	COOLING TOWER FAN 2 SECONDARY SPEED INDICATION	A1	5	4	CTF-402	35761 - J57	I-083	TB8 +D230F	TB3 D1R	I-094	4 - 20mA	0 - 100	%RPM
35761A-AI-30	CT_FAN3_PRI_SPD_IND	AI	COOLING TOWER FAN 3 PRIMARY SPEED INDICATION	A1	5	5	CTF-403	35761 - J58	I-083	TB6 +D130G	TB3 D1R	I-094	4 - 20mA	0 - 100	%RPM
1756-IF6I ISOLATED ANALOG VOLTAGE/CURRENT INPUT MODULE															
35761A-AI-31	EC_CC_PRI_TEMP_SIG	AI	DUCT EC/CC PRIMARY TEMPERATURE SIGNAL	A1	6	0	TT-266A	35761 - J31	I-087	I/O CHAN	I/O CHAN	-	4 - 20mA	35 - 200	DEG F
35761A-AI-32	CS_ENG_PRI_TEMP_SIG	AI	DUCT CS/ENG PRIMARY TEMPERATURE SIGNAL	A1	6	1	TT-276A	35761 - J21	I-087	I/O CHAN	I/O CHAN	-	4 - 20mA	35 - 200	DEG F
† 35761A-AI-33	SPARE2_PRI_TEMP_SIG	AI	SPARE DUCT 2 PRIMARY TEMPERATURE SIGNAL	A1	6	2	TT-286A	35761 - J49	I-087	I/O CHAN	I/O CHAN	-	4 - 20mA	35 - 200	DEG F
† 35761A-AI-34	SPARE3_PRI_TEMP_SIG	AI	SPARE DUCT 3 PRIMARY TEMPERATURE SIGNAL	A1	6	3	TT-296A	35761 - J50	I-087	I/O CHAN	I/O CHAN	-	4 - 20mA	35 - 200	DEG F
35761A-AI-35	ICPS_PRI_TEMP_SIG	AI	DUCT ICPS PRIMARY TEMPERATURE SIGNAL	A1	6	4	TT-306A	35761 - J24	I-087	I/O CHAN	I/O CHAN	-	4 - 20mA	35 - 200	DEG F
† 35761A-AI-36	SPARE4_PRI_TEMP_SIG	AI	SPARE DUCT 4 PRIMARY TEMPERATURE SIGNAL	A1	6	5	TT-316A	35761 - J51	I-087	I/O CHAN	I/O CHAN	-	4 - 20mA	35 - 200	DEG F
1756-IF6I ISOLATED ANALOG VOLTAGE/CURRENT INPUT MODULE															
35761A-AI-37	CS_AFT_DPT237A_PRI_SIG	AI	DUCT CS/AFT PRIMARY FLOW DIFFERENTIAL PRESSURE SIGNAL	A1	7	0	DPT-237A	35761 - J36	I-097	TB6 +D130A	TB3 D1R	I-094	0 - 5 VDC	TBD	PSID
35761A-AI-38	LAS_DPT207A_PRI_SIG	AI	DUCT LAS PRIMARY FLOW DIFFERENTIAL PRESSURE SIGNAL	A1	7	1	DPT-257A	35761 - J40	I-097	TB6 +D130B	TB3 D1R	I-094	0 - 5 VDC	TBD	PSID
35761A-AI-39		AI		A1	7	2									
35761A-AI-40		AI		A1	7	3									
35761A-AI-41	CS_AFT_PT238A_PRI_SIG	AI	DUCT CS/AFT PRIMARY STATIC PRESSURE SIGNAL	A1	7	4	PT-238A	35761 - J38	I-097	TB6 +D130C	TB3 D1R	I-094	0 - 5 VDC	TBD	PSIA
35761A-AI-42	LAS_PT258A_PRI_SIG	AI	DUCT LAS PRIMARY STATIC PRESSURE SIGNAL	A1	7	5	PT-258A	35761 - J42	I-097	TB6 +D130D	TB3 D1R	I-094	0 - 5 VDC	TBD	PSIA
1756-OF8 VOLTAGE/CURRENT ANALOG OUTPUT MODULE															
35761A-AO-1	CT_FAN1_PRI_OUT_ADJ	AO	COOLING TOWER FAN 1 PRIMARY OUTPUT ADJUST	A1	8	0	CTF-401	35761 - J56	I-083	I/O CHAN	I/O CHAN	-	4 - 20mA	0 - 100	%RPM
35761A-AO-2	CT_FAN2_SEC_OUT_ADJ	AO	COOLING TOWER FAN 2 SECONDARY OUTPUT ADJUST	A1	8	1	CTF-402	35761 - J57	I-083	I/O CHAN	I/O CHAN	-	4 - 20mA	0 - 100	%RPM
35761A-AO-3	CT_FAN3_PRI_OUT_ADJ	AO	COOLING TOWER FAN 3 PRIMARY OUTPUT ADJUST	A1	8	2	CTF-403	35761 - J58	I-083	I/O CHAN	I/O CHAN	-	4 - 20mA	0 - 100	%RPM
35761A-AO-4		AO		A1	8	3									
35761A-AO-5		AO		A1	8	4									
35761A-AO-6		AO		A1	8	5									
35761A-AO-7		AO		A1	8	6									
35761A-AO-8		AO		A1	8	7									

NOTES:

1. ALL CELLS MARKED TBD SHALL BE DETERMINED BY THE CONTRACTOR AFTER FINAL EQUIPMENT SELECTION.
2. ALL BLANK ROWS ARE SPARE I/O POINTS.
3. REFERENCE SHEET I-057 FOR ENCLOSURE 35761 CONTROLS ONE-LINES.
4. THE CONTRACTOR SHALL MODIFY THE EXISTING KGCS SOFTWARE AND PLC CONFIGURATION FOR USE IN THE CONTRACTOR PROVIDED REDUNDANT PLC SYSTEM IN ACCORDANCE WITH THE TAG INDEX TABLE ON THIS SHEET AND THE SEQUENCE OF OPERATIONS ON SHEETS I-102 THROUGH I-104.
5. CHANNEL ASSIGNMENTS FOR SPARE DUCTS ARE FOR INSTALL OPTION. THESE CHANNELS ARE DENOTED BY "†" SYMBOL.

SYM	ZONE	DESCRIPTION	DATE	APPROVED
REVISIONS				

JACOBS
Jacobs Technology Inc.

SIGNATURES	DATE
DRAWN M. HENNIGH	3/07/14
CHECKED J. WHITEFORD	3/07/14
SUBMITTED S. RITTER	3/07/14
ST OF LICENSURE: TN LICENSE NO: 00110556	
APPROVED G. WARD	3/07/14
S. HUNT	3/07/14

NATIONAL AERONAUTICS AND SPACE ADMINISTRATION
JOHN F. KENNEDY SPACE CENTER, NASA
KENNEDY SPACE CENTER, FLORIDA

KSC LAUNCH PAD 39-B
ENVIRONMENTAL CONTROL SYSTEM (ECS) REFURBISHMENT
INSTRUMENTATION
ECS LP SYSTEM A1/B1 CHASSIS 35761
TAG INDEX SHEET 1

FILE NO.	SIZE	DWG.NO.	REV
	F	79K39602	
PCN. NO. 98898		SHEET 136 OF 187	

I-053

ECS RIO CABINET 35761 SYSTEM A1 (CONTINUED FROM SHEET I-053)

IDENT	TAG NAME	I/O TYPE	DESCRIPTION	RACK	SLOT	CH	DEVICE TAG	ENCLOSURE INTERFACE CONNECTOR	DEVICE REFERENCE SCHEMATIC	POWER SOURCE/BUS	POWER RETURN/ NEUTRAL	POWER REFERENCE SCHEMATIC	SIGNAL TYPE	SENSOR RANGE	UNITS
1756-OX8I AC(10-265V) / DC(5-150V) ISOLATED RELAY MODULE															
35761A-DO-1	CT_FAN2_SEC_SEL_CMD_HI	DO	COOLING TOWER FAN 2 SECONDARY SELECT COMMAND HIGH	A1	10	0	CTF-402	35761 - J57	I-083	N/A	N/A	-	1 N.C. / 1 N.O.	B1 SELECT / A1 SELECT	-
35761A-DO-2	CT_FAN2_SEC_SEL_CMD_LO	DO	COOLING TOWER FAN 2 SECONDARY SELECT COMMAND LOW	A1	10	1	CTF-402	35761 - J57	I-083	N/A	N/A	-	1 N.C. / 1 N.O.	B1 SELECT / A1 SELECT	-
35761A-DO-3		DO		A1	10	2									
35761A-DO-4		DO		A1	10	3									
35761A-DO-5		DO		A1	10	4									
35761A-DO-6		DO		A1	10	5									
35761A-DO-7		DO		A1	10	6									
35761A-DO-8		DO		A1	10	7									
1756-IB16D DC (10-30V) ISOLATED INPUT MODULE															
35761A-DI-1	35761_D120_ON_IND	DI	35761 - D120 INSTRUMENT BUS POWER ON INDICATION	A1	11	0	TB6 +D120	N/A	I-093	TB6 +D120	TB3 D1R	I-093	10 -30 VDC	PWR ON/ PWR OFF	-
35761A-DI-2	35761_D121_ON_IND	DI	35761 - D121 INSTRUMENT BUS POWER ON INDICATION	A1	11	1	TB7 +D121	N/A	I-093	TB7 +D121	TB3 D1R	I-093	10 -30 VDC	PWR ON/ PWR OFF	-
35761A-DI-3		DI		A1	11	2									
35761A-DI-4		DI		A1	11	3									
35761A-DI-5		DI		A1	11	4									
35761A-DI-6		DI		A1	11	5									
35761A-DI-7		DI		A1	11	6									
35761A-DI-8		DI		A1	11	7									
35761A-DI-9		DI		A1	11	8									
35761A-DI-10		DI		A1	11	9									
35761A-DI-11		DI		A1	11	10									
35761A-DI-12		DI		A1	11	11									
35761A-DI-13		DI		A1	11	12									
35761A-DI-14		DI		A1	11	13									
35761A-DI-15		DI		A1	11	14									
35761A-DI-16		DI		A1	11	15									
1756-OB8EI DC (10-30V) ELECTRONICALLY FUSED ISOLATED OUTPUT MODULE															
35761A-DO-9	35761_D120_ON_CMD	DO	35761 - D120 INSTRUMENT BUS POWER ON COMMAND	A1	13	0	K1	N/A	I-093	TB1 +D110	TB3 D1R	I-093	10 - 30 VDC	PWR ON/ PWR OFF	-
35761A-DO-10	35761_D121_ON_CMD	DO	35761 - D121 COMMAND BUS POWER ON COMMAND	A1	13	1	K2	N/A	I-093	TB1 +D110	TB3 D1R	I-093	10 - 30 VDC	PWR ON/ PWR OFF	-
35761A-DO-11		DO		A1	13	2									
35761A-DO-12		DO		A1	13	3									
35761A-DO-13		DO		A1	13	4									
35761A-DO-14		DO		A1	13	5									
35761A-DO-15	CS_ENG_SOV274A_OPN_CMD	DO	DUCT CS/ENG HUMIDITY SOLENOID ISOLATION VALVE SOV-274A OPEN COMMAND	A1	13	6	SOV-274A	35761 - J44	I-089	TB7 +D131E	TB3 D1R	I-094	10 - 30 VDC	OPEN/DON'T OPEN	-
35761A-DO-16	ICPS_SOV304A_OPN_CMD	DO	DUCT ICPS HUMIDITY SOLENOID ISOLATION VALVE SOV-304A OPEN COMMAND	A1	13	7	SOV-304A	35761 - J46	I-089	TB7 +D131F	TB3 D1R	I-094	10 - 30 VDC	OPEN/DON'T OPEN	-
1756-OB8EI DC (10-30V) ELECTRONICALLY FUSED ISOLATED OUTPUT MODULE															
35761A-DO-17	35761_D130A_ON_CMD	DO	35761 - D130A INSTRUMENT BUS POWER ON COMMAND	A1	14	0	TB6 +D130A	N/A	I-094	TB6 +D120	TB3 D1R	I-094	10 - 30 VDC	PWR ON/ PWR OFF	-
35761A-DO-18	35761_D130B_ON_CMD	DO	35761 - D130B INSTRUMENT BUS POWER ON COMMAND	A1	14	1	TB6 +D130B	N/A	I-094	TB6 +D120	TB3 D1R	I-094	10 - 30 VDC	PWR ON/ PWR OFF	-
35761A-DO-19	35761_D130C_ON_CMD	DO	35761 - D130C INSTRUMENT BUS POWER ON COMMAND	A1	14	2	TB6 +D130C	N/A	I-094	TB6 +D120	TB3 D1R	I-094	10 - 30 VDC	PWR ON/ PWR OFF	-
35761A-DO-20	35761_D130D_ON_CMD	DO	35761 - D130D INSTRUMENT BUS POWER ON COMMAND	A1	14	3	TB6 +D130D	N/A	I-094	TB6 +D120	TB3 D1R	I-094	10 - 30 VDC	PWR ON/ PWR OFF	-
35761A-DO-21	35761_D130E_ON_CMD	DO	35761 - D130E INSTRUMENT BUS POWER ON COMMAND	A1	14	4	TB6 +D130E	N/A	I-094	TB6 +D120	TB3 D1R	I-094	10 - 30 VDC	PWR ON/ PWR OFF	-
35761A-DO-22	35761_D130F_ON_CMD	DO	35761 - D130F INSTRUMENT BUS POWER ON COMMAND	A1	14	5	TB6 +D130F	N/A	I-094	TB6 +D120	TB3 D1R	I-094	10 - 30 VDC	PWR ON/ PWR OFF	-
35761A-DO-23	35761_D130G_ON_CMD	DO	35761 - D130G INSTRUMENT BUS POWER ON COMMAND	A1	14	6	TB6 +D130G	N/A	I-094	TB6 +D120	TB3 D1R	I-094	10 - 30 VDC	PWR ON/ PWR OFF	-
35761A-DO-24	35761_D130H_ON_CMD	DO	35761 - D130H INSTRUMENT BUS POWER ON COMMAND	A1	14	7	TB6 +D130H	N/A	I-094	TB6 +D120	TB3 D1R	I-094	10 - 30 VDC	PWR ON/ PWR OFF	-
1756-OB8EI DC (10-30V) ELECTRONICALLY FUSED ISOLATED OUTPUT MODULE															
35761A-DO-25	35761_D131A_ON_CMD	DO	35761 - D131A COMMAND BUS POWER ON COMMAND	A1	15	0	TB7 +D131A	N/A	I-094	TB7 +D121	TB3 D1R	I-094	10 - 30 VDC	PWR ON/ PWR OFF	-
35761A-DO-26	35761_D131B_ON_CMD	DO	35761 - D131B COMMAND BUS POWER ON COMMAND	A1	15	1	TB7 +D131B	N/A	I-094	TB7 +D121	TB3 D1R	I-094	10 - 30 VDC	PWR ON/ PWR OFF	-
35761A-DO-27	35761_D131C_ON_CMD	DO	35761 - D131C COMMAND BUS POWER ON COMMAND	A1	15	2	TB7 +D131C	N/A	I-094	TB7 +D121	TB3 D1R	I-094	10 - 30 VDC	PWR ON/ PWR OFF	-
35761A-DO-28	35761_D131D_ON_CMD	DO	35761 - D131D COMMAND BUS POWER ON COMMAND	A1	15	3	TB7 +D131D	N/A	I-094	TB7 +D121	TB3 D1R	I-094	10 - 30 VDC	PWR ON/ PWR OFF	-
35761A-DO-29	35761_D131E_ON_CMD	DO	35761 - D131E COMMAND BUS POWER ON COMMAND	A1	15	4	TB7 +D131E	N/A	I-094	TB7 +D121	TB3 D1R	I-094	10 - 30 VDC	PWR ON/ PWR OFF	-
35761A-DO-30	35761_D131F_ON_CMD	DO	35761 - D131F COMMAND BUS POWER ON COMMAND	A1	15	5	TB7 +D131F	N/A	I-094	TB7 +D121	TB3 D1R	I-094	10 - 30 VDC	PWR ON/ PWR OFF	-
35761A-DO-31	35761_D131G_ON_CMD	DO	35761 - D131G COMMAND BUS POWER ON COMMAND	A1	15	6	TB7 +D131G	N/A	I-094	TB7 +D121	TB3 D1R	I-094	10 - 30 VDC	PWR ON/ PWR OFF	-
35761A-DO-32	35761_D131H_ON_CMD	DO	35761 - D131H COMMAND BUS POWER ON COMMAND	A1	15	7	TB7 +D131H	N/A	I-094	TB7 +D121	TB3 D1R	I-094	10 - 30 VDC	PWR ON/ PWR OFF	-

NOTES:

1. ALL CELLS MARKED TBD SHALL BE DETERMINED BY THE CONTRACTOR AFTER FINAL EQUIPMENT SELECTION.
2. ALL BLANK ROWS ARE SPARE I/O POINTS.
3. REFERENCE SHEET I-057 FOR ENCLOSURE 35761 CONTROLS ONE-LINES.
4. THE CONTRACTOR SHALL MODIFY THE EXISTING KGCS SOFTWARE AND PLC CONFIGURATION FOR USE IN THE CONTRACTOR PROVIDED REDUNDANT PLC SYSTEM IN ACCORDANCE WITH THE TAG INDEX TABLE ON THIS SHEET AND THE SEQUENCE OF OPERATIONS ON SHEETS I-102 THROUGH I-104.
5. CHANNEL ASSIGNMENTS FOR SPARE DUCTS ARE FOR INSTALL OPTION. THESE CHANNELS ARE DENOTED BY "†" SYMBOL.

SYM	ZONE	DESCRIPTION	DATE	APPROVED
REVISIONS				

JACOBS
Jacobs Technology Inc.

SIGNATURES	DATE
DRAWN M. HENNIGH	3/07/14
CHECKED J. WHITEFORD	3/07/14
SUBMITTED S. RITTER	3/07/14
ST OF LICENSURE: TN LICENSE NO: 00110556	
APPROVED G. WARD	3/07/14
S. HUNT	3/07/14

NATIONAL AERONAUTICS AND SPACE ADMINISTRATION
JOHN F. KENNEDY SPACE CENTER, NASA
KENNEDY SPACE CENTER, FLORIDA

KSC LAUNCH PAD 39-B
ENVIRONMENTAL CONTROL SYSTEM (ECS) REFURBISHMENT
INSTRUMENTATION
ECS LP SYSTEM A1/B1 CHASSIS 35761
TAG INDEX SHEET 2

FILE NO.	SIZE	DWG.NO.	REV
	F	79K39602	
PCN. NO. 98898		SHEET 137 OF 187	

I-054

ECS RIO CABINET 35761 SYSTEM B1

IDENT	TAG NAME	I/O TYPE	DESCRIPTION	RACK	SLOT	CH	DEVICE TAG	ENCLOSURE INTERFACE CONNECTOR	DEVICE REFERENCE SCHEMATIC	POWER SOURCE/BUS	POWER RETURN/ NEUTRAL	POWER REFERENCE SCHEMATIC	SIGNAL TYPE	SENSOR RANGE	UNITS
1756-IF6I ISOLATED ANALOG VOLTAGE/CURRENT INPUT MODULE															
35761B-AI-1	35761_GSP_SYSB_SUP_V	AI	35761 GSP BUS B VDC (SUPPLY VOLTAGE = SIGNAL x 4)	B1	1	0	R4	N/A	I-093	N/A	TB3 D1R	I-093	0 - 10 VDC	0 - 10	VDC
35761B-AI-2		AI		B1	1	1									
35761B-AI-3		AI		B1	1	2									
35761B-AI-4		AI		B1	1	3									
35761B-AI-5		AI		B1	1	4									
35761B-AI-6		AI		B1	1	5									
1756-IF6I ISOLATED ANALOG VOLTAGE/CURRENT INPUT MODULE															
35761B-AI-7	CS_IT_SEC_HUM_SIG	AI	DUCT CS/IT SECONDARY HUMIDITY SIGNAL	B1	2	0	MT-206B	35761 - J19	I-087	I/O CHAN	I/O CHAN	-	4 - 20mA	0 - 100	%RH
35761B-AI-8	CS_FS_SEC_HUM_SIG	AI	DUCT CS/FS SECONDARY HUMIDITY SIGNAL	B1	2	1	MT-216B	35761 - J16	I-087	I/O CHAN	I/O CHAN	-	4 - 20mA	0 - 100	%RH
35761B-AI-9	SM_SEC_HUM_SIG	AI	DUCT SM SECONDARY HUMIDITY SIGNAL	B1	2	2	MT-226B	35761 - J22	I-087	I/O CHAN	I/O CHAN	-	4 - 20mA	0 - 100	%RH
35761B-AI-10	CS_AFT_SEC_HUM_SIG	AI	DUCT CS/AFT SECONDARY HUMIDITY SIGNAL	B1	2	3	MT-236B	35761 - J26	I-087	I/O CHAN	I/O CHAN	-	4 - 20mA	0 - 100	%RH
† 35761B-AI-11	SPARE1_SEC_HUM_SIG	AI	SPARE DUCT 1 SECONDARY HUMIDITY SIGNAL	B1	2	4	MT-246B	35761 - J52	I-087	I/O CHAN	I/O CHAN	-	4 - 20mA	0 - 100	%RH
35761B-AI-12	LAS_SEC_HUM_SIG	AI	DUCT LAS SECONDARY HUMIDITY SIGNAL	B1	2	5	MT-256B	35761 - J28	I-087	I/O CHAN	I/O CHAN	-	4 - 20mA	0 - 100	%RH
1756-IF6I ISOLATED ANALOG VOLTAGE/CURRENT INPUT MODULE															
35761B-AI-13	EC_CC_SEC_HUM_SIG	AI	DUCT EC/CC SECONDARY HUMIDITY SIGNAL	B1	3	0	MT-266B	35761 - J32	I-087	I/O CHAN	I/O CHAN	-	4 - 20mA	0 - 100	%RH
35761B-AI-14	CS_ENG_SEC_HUM_SIG	AI	DUCT CS/ENG SECONDARY HUMIDITY SIGNAL	B1	3	1	MT-276B	35761 - J30	I-087	I/O CHAN	I/O CHAN	-	4 - 20mA	0 - 100	%RH
† 35761B-AI-15	SPARE2_SEC_HUM_SIG	AI	SPARE DUCT 2 SECONDARY HUMIDITY SIGNAL	B1	3	2	MT-286B	35761 - J53	I-087	I/O CHAN	I/O CHAN	-	4 - 20mA	0 - 100	%RH
† 35761B-AI-16	SPARE3_SEC_HUM_SIG	AI	SPARE DUCT 3 SECONDARY HUMIDITY SIGNAL	B1	3	3	MT-296B	35761 - J54	I-087	I/O CHAN	I/O CHAN	-	4 - 20mA	0 - 100	%RH
35761B-AI-17	ICPS_SEC_HUM_SIG	AI	DUCT ICPS SECONDARY HUMIDITY SIGNAL	B1	3	4	MT-306B	35761 - J33	I-087	I/O CHAN	I/O CHAN	-	4 - 20mA	0 - 100	%RH
† 35761B-AI-18	SPARE4_SEC_HUM_SIG	AI	SPARE DUCT 4 SECONDARY HUMIDITY SIGNAL	B1	3	5	MT-316B	35761 - J55	I-087	I/O CHAN	I/O CHAN	-	4 - 20mA	0 - 100	%RH
1756-IF6I ISOLATED ANALOG VOLTAGE/CURRENT INPUT MODULE															
35761B-AI-19	CS_IT_SEC_TEMP_SIG	AI	DUCT CS/IT SECONDARY TEMPERATURE SIGNAL	B1	4	0	TT-206B	35761 - J19	I-087	I/O CHAN	I/O CHAN	-	4 - 20mA	35 - 200	DEG F
35761B-AI-20	CS_FS_SEC_TEMP_SIG	AI	DUCT CS/FS SECONDARY TEMPERATURE SIGNAL	B1	4	1	TT-216B	35761 - J16	I-087	I/O CHAN	I/O CHAN	-	4 - 20mA	35 - 200	DEG F
35761B-AI-21	SM_SEC_TEMP_SIG	AI	DUCT SM SECONDARY TEMPERATURE SIGNAL	B1	4	2	TT-226B	35761 - J22	I-087	I/O CHAN	I/O CHAN	-	4 - 20mA	35 - 200	DEG F
35761B-AI-22	CS_AFT_SEC_TEMP_SIG	AI	DUCT CS/AFT SECONDARY TEMPERATURE SIGNAL	B1	4	3	TT-236B	35761 - J26	I-087	I/O CHAN	I/O CHAN	-	4 - 20mA	35 - 200	DEG F
† 35761B-AI-23	SPARE1_SEC_TEMP_SIG	AI	SPARE DUCT 1 SECONDARY TEMPERATURE SIGNAL	B1	4	4	TT-246B	35761 - J52	I-087	I/O CHAN	I/O CHAN	-	4 - 20mA	35 - 200	DEG F
35761B-AI-24	LAS_SEC_TEMP_SIG	AI	DUCT LAS SECONDARY TEMPERATURE SIGNAL	B1	4	5	TT-256B	35761 - J28	I-087	I/O CHAN	I/O CHAN	-	4 - 20mA	35 - 200	DEG F
1756-IF6I ISOLATED ANALOG VOLTAGE/CURRENT INPUT MODULE															
35761B-AI-25	N_CC_COIL_SEC_HUM_SIG	AI	NORTH COOLING CHAMBER COLD COIL SECONDARY HUMIDITY SIGNAL	B1	5	0	MT-104B	35761 - J14	I-087	I/O CHAN	I/O CHAN	-	4 - 20mA	0 - 100	%RH
35761B-AI-26	S_CC_COIL_SEC_HUM_SIG	AI	SOUTH COOLING CHAMBER COLD COIL SECONDARY HUMIDITY SIGNAL	B1	5	1	MT-114B	35761 - J20	I-087	I/O CHAN	I/O CHAN	-	4 - 20mA	0 - 100	%RH
35761B-AI-27	ICPS_CC_COIL_SEC_HUM_SIG	AI	ICPS COOLING CHAMBER COLD COIL SECONDARY HUMIDITY SIGNAL	B1	5	2	MT-124B	35761 - J35	I-087	I/O CHAN	I/O CHAN	-	4 - 20mA	0 - 100	%RH
35761B-AI-28	CT_FAN1_SEC_SPD_IND	AI	COOLING TOWER FAN 1 SECONDARY SPEED INDICATION	B1	5	3	CTF-401	35761 - J56	I-083	TB6 +D130F	TB3 D1R	I-094	4 - 20mA	0 - 100	%RPM
35761B-AI-29	CT_FAN2_PRI_SPD_IND	AI	COOLING TOWER FAN 2 PRIMARY SPEED INDICATION	B1	5	4	CTF-402	35761 - J57	I-083	TB8 +D230F	TB3 D1R	I-094	4 - 20mA	0 - 100	%RPM
35761B-AI-30	CT_FAN3_SEC_SPD_IND	AI	COOLING TOWER FAN 3 SECONDARY SPEED INDICATION	B1	5	5	CTF-403	35761 - J58	I-083	TB6 +D130G	TB3 D1R	I-094	4 - 20mA	0 - 100	%RPM
1756-IF6I ISOLATED ANALOG VOLTAGE/CURRENT INPUT MODULE															
35761B-AI-31	EC_CC_SEC_TEMP_SIG	AI	DUCT EC/CC SECONDARY TEMPERATURE SIGNAL	B1	6	0	TT-266B	35761 - J32	I-087	I/O CHAN	I/O CHAN	-	4 - 20mA	35 - 200	DEG F
35761B-AI-32	CS_ENG_SEC_TEMP_SIG	AI	DUCT CS/ENG SECONDARY TEMPERATURE SIGNAL	B1	6	1	TT-276B	35761 - J30	I-087	I/O CHAN	I/O CHAN	-	4 - 20mA	35 - 200	DEG F
† 35761B-AI-33	SPARE2_SEC_TEMP_SIG	AI	SPARE DUCT 2 SECONDARY TEMPERATURE SIGNAL	B1	6	2	TT-286B	35761 - J53	I-087	I/O CHAN	I/O CHAN	-	4 - 20mA	35 - 200	DEG F
† 35761B-AI-34	SPARE3_SEC_TEMP_SIG	AI	SPARE DUCT 3 SECONDARY TEMPERATURE SIGNAL	B1	6	3	TT-296B	35761 - J54	I-087	I/O CHAN	I/O CHAN	-	4 - 20mA	35 - 200	DEG F
35761B-AI-35	ICPS_SEC_TEMP_SIG	AI	DUCT ICPS SECONDARY TEMPERATURE SIGNAL	B1	6	4	TT-306B	35761 - J33	I-087	I/O CHAN	I/O CHAN	-	4 - 20mA	35 - 200	DEG F
† 35761B-AI-36	SPARE4_SEC_TEMP_SIG	AI	SPARE DUCT 4 SECONDARY TEMPERATURE SIGNAL	B1	6	5	TT-316B	35761 - J55	I-087	I/O CHAN	I/O CHAN	-	4 - 20mA	35 - 200	DEG F
1756-IF6I ISOLATED ANALOG VOLTAGE/CURRENT INPUT MODULE															
35761B-AI-37	CS_AFT_DPT237B_SEC_SIG	AI	DUCT CS/AFT SECONDARY FLOW DIFFERENTIAL PRESSURE SIGNAL	B1	7	0	DPT-237B	35761 - J37	I-097	TB8 +D230A	TB3 D1R	I-094	0 - 5 VDC	TBD	PSID
35761B-AI-38	LAS_DPT257B_SEC_SIG	AI	DUCT LAS SECONDARY FLOW DIFFERENTIAL PRESSURE SIGNAL	B1	7	1	DPT-257B	35761 - J41	I-097	TB8 +D230B	TB3 D1R	I-094	0 - 5 VDC	TBD	PSID
35761B-AI-39		AI		B1	7	2									
35761B-AI-40		AI		B1	7	3									
35761B-AI-41	CS_AFT_PT238B_SEC_SIG	AI	DUCT CS/AFT SECONDARY STATIC PRESSURE SIGNAL	B1	7	4	PT-238B	35761 - J39	I-097	TB8 +D230C	TB3 D1R	I-094	0 - 5 VDC	TBD	PSIA
35761B-AI-42	LAS_PT258B_SEC_SIG	AI	DUCT LAS SECONDARY STATIC PRESSURE SIGNAL	B1	7	5	PT-258B	35761 - J43	I-097	TB8 +D230D	TB3 D1R	I-094	0 - 5 VDC	TBD	PSIA
1756-OF8 VOLTAGE/CURRENT ANALOG OUTPUT MODULE															
35761B-AO-1	CT_FAN1_SEC_OUT_ADJ	AO	COOLING TOWER FAN 1 SECONDARY OUTPUT ADJUST	B1	8	0	CTF-401	35761 - J56	I-083	I/O CHAN	I/O CHAN	-	4 - 20mA	0 - 100	%RPM
35761B-AO-2	CT_FAN2_PRI_OUT_ADJ	AO	COOLING TOWER FAN 2 PRIMARY OUTPUT ADJUST	B1	8	1	CTF-402	35761 - J57	I-083	I/O CHAN	I/O CHAN	-	4 - 20mA	0 - 100	%RPM
35761B-AO-3	CT_FAN3_SEC_OUT_ADJ	AO	COOLING TOWER FAN 3 SECONDARY OUTPUT ADJUST	B1	8	2	CTF-403	35761 - J58	I-083	I/O CHAN	I/O CHAN	-	4 - 20mA	0 - 100	%RPM
35761B-AO-4		AO		B1	8	3									
35761B-AO-5		AO		B1	8	4									
35761B-AO-6		AO		B1	8	5									
35761B-AO-7		AO		B1	8	6									
35761B-AO-8		AO		B1	8	7									

NOTES:

1. ALL CELLS MARKED TBD SHALL BE DETERMINED BY THE CONTRACTOR AFTER FINAL EQUIPMENT SELECTION.
2. ALL BLANK ROWS ARE SPARE I/O POINTS.
3. REFERENCE SHEET I-057 FOR ENCLOSURE 35761 CONTROLS ONE-LINES.
4. THE CONTRACTOR SHALL MODIFY THE EXISTING KGCS SOFTWARE AND PLC CONFIGURATION FOR USE IN THE CONTRACTOR PROVIDED REDUNDANT PLC SYSTEM IN ACCORDANCE WITH THE TAG INDEX TABLE ON THIS SHEET AND THE SEQUENCE OF OPERATIONS ON SHEETS I-102 THROUGH I-104.
5. CHANNEL ASSIGNMENTS FOR SPARE DUCTS ARE FOR INSTALL OPTION. THESE CHANNELS ARE DENOTED BY "†" SYMBOL.

SYM	ZONE	DESCRIPTION	DATE	APPROVED
REVISIONS				

JACOBS™
Jacobs Technology Inc.

SIGNATURES		DATE
DRAWN	M. HENNIGH	3/07/14
CHECKED	J. WHITEFORD	3/07/14
SUBMITTED	S. RITTER	3/07/14
ST OF LICENSURE: TN LICENSE NO: 00110556		
APPROVED	G. WARD	3/07/14
	S. HUNT	3/07/14

NATIONAL AERONAUTICS AND SPACE ADMINISTRATION
JOHN F. KENNEDY SPACE CENTER, NASA
KENNEDY SPACE CENTER, FLORIDA

KSC LAUNCH PAD 39-B
ENVIRONMENTAL CONTROL SYSTEM (ECS) REFURBISHMENT
INSTRUMENTATION
ECS LP SYSTEM A1/B1 CHASSIS 35761
TAG INDEX SHEET 3

FILE NO.	SIZE	DWG.NO.	REV
	F	79K39602	
PCN. NO. 98898		SHEET 138 OF 187	

I-055

ECS RIO CABINET 35761 SYSTEM B1 (CONTINUED FROM SHEET I-055)

IDENT	TAG NAME	I/O TYPE	DESCRIPTION	RACK	SLOT	CH	DEVICE TAG	ENCLOSURE INTERFACE CONNECTOR	DEVICE REFERENCE SCHEMATIC	POWER SOURCE/BUS	POWER RETURN/ NEUTRAL	POWER REFERENCE SCHEMATIC	SIGNAL TYPE	SENSOR RANGE	UNITS
1756-OX8I AC(10-265V) / DC(5-150V) ISOLATED RELAY MODULE															
35761B-DO-1	CT_FAN1_SEC_SEL_CMD_HI	DO	COOLING TOWER FAN 1 SECONDARY SELECT COMMAND HIGH	B1	10	0	CTF-401	35761 - J56	I-083	N/A	N/A	-	1 N.C. / 1 N.O.	B1 SELECT / A1 SELECT	-
35761B-DO-2	CT_FAN1_SEC_SEL_CMD_LO	DO	COOLING TOWER FAN 1 SECONDARY SELECT COMMAND LOW	B1	10	1	CTF-401	35761 - J56	I-083	N/A	N/A	-	1 N.C. / 1 N.O.	B1 SELECT / A1 SELECT	-
35761B-DO-3	CT_FAN3_SEC_SEL_CMD_HI	DO	COOLING TOWER FAN 3 SECONDARY SELECT COMMAND HIGH	B1	10	2	CTF-403	35761 - J58	I-083	N/A	N/A	-	1 N.C. / 1 N.O.	B1 SELECT / A1 SELECT	-
35761B-DO-4	CT_FAN3_SEC_SEL_CMD_LO	DO	COOLING TOWER FAN 3 SECONDARY SELECT COMMAND LOW	B1	10	3	CTF-403	35761 - J58	I-083	N/A	N/A	-	1 N.C. / 1 N.O.	B1 SELECT / A1 SELECT	-
35761B-DO-5		DO		B1	10	4									
35761B-DO-6		DO		B1	10	5									
35761B-DO-7		DO		B1	10	6									
35761B-DO-8		DO		B1	10	7									
1756-IB16D DC (10-30V) ISOLATED INPUT MODULE															
35761B-DI-1	35761_D220_ON_IND	DI	35761 - D220 INSTRUMENT BUS POWER ON INDICATION	B1	11	0	TB8 +D220	N/A	I-093	TB8 +D220	TB3 D1R	I-093	10 -30 VDC	PWR ON/ PWR OFF	-
35761B-DI-2	35761_D221_ON_IND	DI	35761 - D221 INSTRUMENT BUS POWER ON INDICATION	B1	11	1	TB9 +D221	N/A	I-093	TB9 +D221	TB3 D1R	I-093	10 -30 VDC	PWR ON/ PWR OFF	-
35761B-DI-3		DI		B1	11	2									
35761B-DI-4		DI		B1	11	3									
35761B-DI-5		DI		B1	11	4									
35761B-DI-6		DI		B1	11	5									
35761B-DI-7		DI		B1	11	6									
35761B-DI-8		DI		B1	11	7									
35761B-DI-9		DI		B1	11	8									
35761B-DI-10		DI		B1	11	9									
35761B-DI-11		DI		B1	11	10									
35761B-DI-12		DI		B1	11	11									
35761B-DI-13		DI		B1	11	12									
35761B-DI-14		DI		B1	11	13									
35761B-DI-15		DI		B1	11	14									
35761B-DI-16		DI		B1	11	15									
1756-OB8EI DC (10-30V) ELECTRONICALLY FUSED ISOLATED OUTPUT MODULE															
35761B-DO-9	35761_D220_ON_CMD	DO	35761 - D220 INSTRUMENT BUS POWER ON COMMAND	B1	13	0	K3	N/A	I-093	TB2 +D210	TB3 D1R	I-093	10 - 30 VDC	PWR ON/ PWR OFF	-
35761B-DO-10	35761_D221_ON_CMD	DO	35761 - D221 COMMAND BUS POWER ON COMMAND	B1	13	1	K4	N/A	I-093	TB2 +D210	TB3 D1R	I-093	10 - 30 VDC	PWR ON/ PWR OFF	-
35761B-DO-11		DO		B1	13	2									
35761B-DO-12		DO		B1	13	3									
35761B-DO-13		DO		B1	13	4									
35761B-DO-14		DO		B1	13	5									
35761B-DO-15	CS_ENG_SOV274B_OPN_CMD	DO	DUCT CS/ENG HUMIDITY SOLENOID ISOLATION VALVE SOV-274B OPEN COMMAND	B1	13	6	SOV-274B	35371 - J45	I-089	TB9 +D231E	TB3 D1R	I-094	10 - 30 VDC	OPEN/DON'T OPEN	-
35761B-DO-16	ICPS_SOV304B_OPN_CMD	DO	DUCT ICPS HUMIDITY SOLENOID ISOLATION VALVE SOV-304B OPEN COMMAND	B1	13	7	SOV-304B	35371 - J47	I-089	TB9 +D231F	TB3 D1R	I-094	10 - 30 VDC	OPEN/DON'T OPEN	-
1756-OB8EI DC (10-30V) ELECTRONICALLY FUSED ISOLATED OUTPUT MODULE															
35761B-DO-17	35761_D230A_ON_CMD	DO	35761 - D230A INSTRUMENT BUS POWER ON COMMAND	B1	14	0	TB8 +D230A	N/A	I-094	TB8 +D220	TB3 D1R	I-094	10 - 30 VDC	PWR ON/ PWR OFF	-
35761B-DO-18	35761_D230B_ON_CMD	DO	35761 - D230B INSTRUMENT BUS POWER ON COMMAND	B1	14	1	TB8 +D230B	N/A	I-094	TB8 +D220	TB3 D1R	I-094	10 - 30 VDC	PWR ON/ PWR OFF	-
35761B-DO-19	35761_D230C_ON_CMD	DO	35761 - D230C INSTRUMENT BUS POWER ON COMMAND	B1	14	2	TB8 +D230C	N/A	I-094	TB8 +D220	TB3 D1R	I-094	10 - 30 VDC	PWR ON/ PWR OFF	-
35761B-DO-20	35761_D230D_ON_CMD	DO	35761 - D230D INSTRUMENT BUS POWER ON COMMAND	B1	14	3	TB8 +D230D	N/A	I-094	TB8 +D220	TB3 D1R	I-094	10 - 30 VDC	PWR ON/ PWR OFF	-
35761B-DO-21	35761_D230E_ON_CMD	DO	35761 - D230E INSTRUMENT BUS POWER ON COMMAND	B1	14	4	TB8 +D230E	N/A	I-094	TB8 +D220	TB3 D1R	I-094	10 - 30 VDC	PWR ON/ PWR OFF	-
35761B-DO-22	35761_D230F_ON_CMD	DO	35761 - D230F INSTRUMENT BUS POWER ON COMMAND	B1	14	5	TB8 +D230F	N/A	I-094	TB8 +D220	TB3 D1R	I-094	10 - 30 VDC	PWR ON/ PWR OFF	-
35761B-DO-23	35761_D230G_ON_CMD	DO	35761 - D230G INSTRUMENT BUS POWER ON COMMAND	B1	14	6	TB8 +D230G	N/A	I-094	TB8 +D220	TB3 D1R	I-094	10 - 30 VDC	PWR ON/ PWR OFF	-
35761B-DO-24	35761_D230H_ON_CMD	DO	35761 - D230H INSTRUMENT BUS POWER ON COMMAND	B1	14	7	TB8 +D230H	N/A	I-094	TB8 +D220	TB3 D1R	I-094	10 - 30 VDC	PWR ON/ PWR OFF	-
1756-OB8EI DC (10-30V) ELECTRONICALLY FUSED ISOLATED OUTPUT MODULE															
35761B-DO-25	35761_D231A_ON_CMD	DO	35761 - D231A COMMAND BUS POWER ON COMMAND	B1	15	0	TB9 +D231A	N/A	I-094	TB9 +D221	TB3 D1R	I-094	10 - 30 VDC	PWR ON/ PWR OFF	-
35761B-DO-26	35761_D231B_ON_CMD	DO	35761 - D231B COMMAND BUS POWER ON COMMAND	B1	15	1	TB9 +D231B	N/A	I-094	TB9 +D221	TB3 D1R	I-094	10 - 30 VDC	PWR ON/ PWR OFF	-
35761B-DO-27	35761_D231C_ON_CMD	DO	35761 - D231C COMMAND BUS POWER ON COMMAND	B1	15	2	TB9 +D231C	N/A	I-094	TB9 +D221	TB3 D1R	I-094	10 - 30 VDC	PWR ON/ PWR OFF	-
35761B-DO-28	35761_D231D_ON_CMD	DO	35761 - D231D COMMAND BUS POWER ON COMMAND	B1	15	3	TB9 +D231D	N/A	I-094	TB9 +D221	TB3 D1R	I-094	10 - 30 VDC	PWR ON/ PWR OFF	-
35761B-DO-29	35761_D231E_ON_CMD	DO	35761 - D231E COMMAND BUS POWER ON COMMAND	B1	15	4	TB9 +D231E	N/A	I-094	TB9 +D221	TB3 D1R	I-094	10 - 30 VDC	PWR ON/ PWR OFF	-
35761B-DO-30	35761_D231F_ON_CMD	DO	35761 - D231F COMMAND BUS POWER ON COMMAND	B1	15	5	TB9 +D231F	N/A	I-094	TB9 +D221	TB3 D1R	I-094	10 - 30 VDC	PWR ON/ PWR OFF	-
35761B-DO-31	35761_D231G_ON_CMD	DO	35761 - D231G COMMAND BUS POWER ON COMMAND	B1	15	6	TB9 +D231G	N/A	I-094	TB9 +D221	TB3 D1R	I-094	10 - 30 VDC	PWR ON/ PWR OFF	-
35761B-DO-32	35761_D231H_ON_CMD	DO	35761 - D231H COMMAND BUS POWER ON COMMAND	B1	15	7	TB9 +D231H	N/A	I-094	TB9 +D221	TB3 D1R	I-094	10 - 30 VDC	PWR ON/ PWR OFF	-

NOTES:

1. ALL CELLS MARKED TBD SHALL BE DETERMINED BY THE CONTRACTOR AFTER FINAL EQUIPMENT SELECTION.
2. ALL BLANK ROWS ARE SPARE I/O POINTS.
3. REFERENCE SHEET I-057 FOR ENCLOSURE 35761 CONTROLS ONE-LINES.
4. THE CONTRACTOR SHALL MODIFY THE EXISTING KGCS SOFTWARE AND PLC CONFIGURATION FOR USE IN THE CONTRACTOR PROVIDED REDUNDANT PLC SYSTEM IN ACCORDANCE WITH THE TAG INDEX TABLE ON THIS SHEET AND THE SEQUENCE OF OPERATIONS ON SHEETS I-102 THROUGH I-104.
5. CHANNEL ASSIGNMENTS FOR SPARE DUCTS ARE FOR INSTALL OPTION. THESE CHANNELS ARE DENOTED BY "†" SYMBOL.

SYM	ZONE	DESCRIPTION	DATE	APPROVED
REVISIONS				

JACOBS
Jacobs Technology Inc.

SIGNATURES		DATE
DRAWN	M. HENNIGH	3/07/14
CHECKED	J. WHITEFORD	3/07/14
SUBMITTED	S. RITTER	3/07/14
ST OF LICENSURE: TN LICENSE NO: 00110556		
APPROVED	G. WARD	3/07/14
	S. HUNT	3/07/14

NATIONAL AERONAUTICS AND SPACE ADMINISTRATION
JOHN F. KENNEDY SPACE CENTER, NASA
KENNEDY SPACE CENTER, FLORIDA

KSC LAUNCH PAD 39-B
ENVIRONMENTAL CONTROL SYSTEM (ECS) REFURBISHMENT
INSTRUMENTATION
ECS LP SYSTEM A1/B1 CHASSIS 35761
TAG INDEX SHEET 4

FILE NO.	SIZE	DWG.NO.	REV
	F	79K39602	
PCN. NO. 98898		SHEET 139 OF 187	

I-056

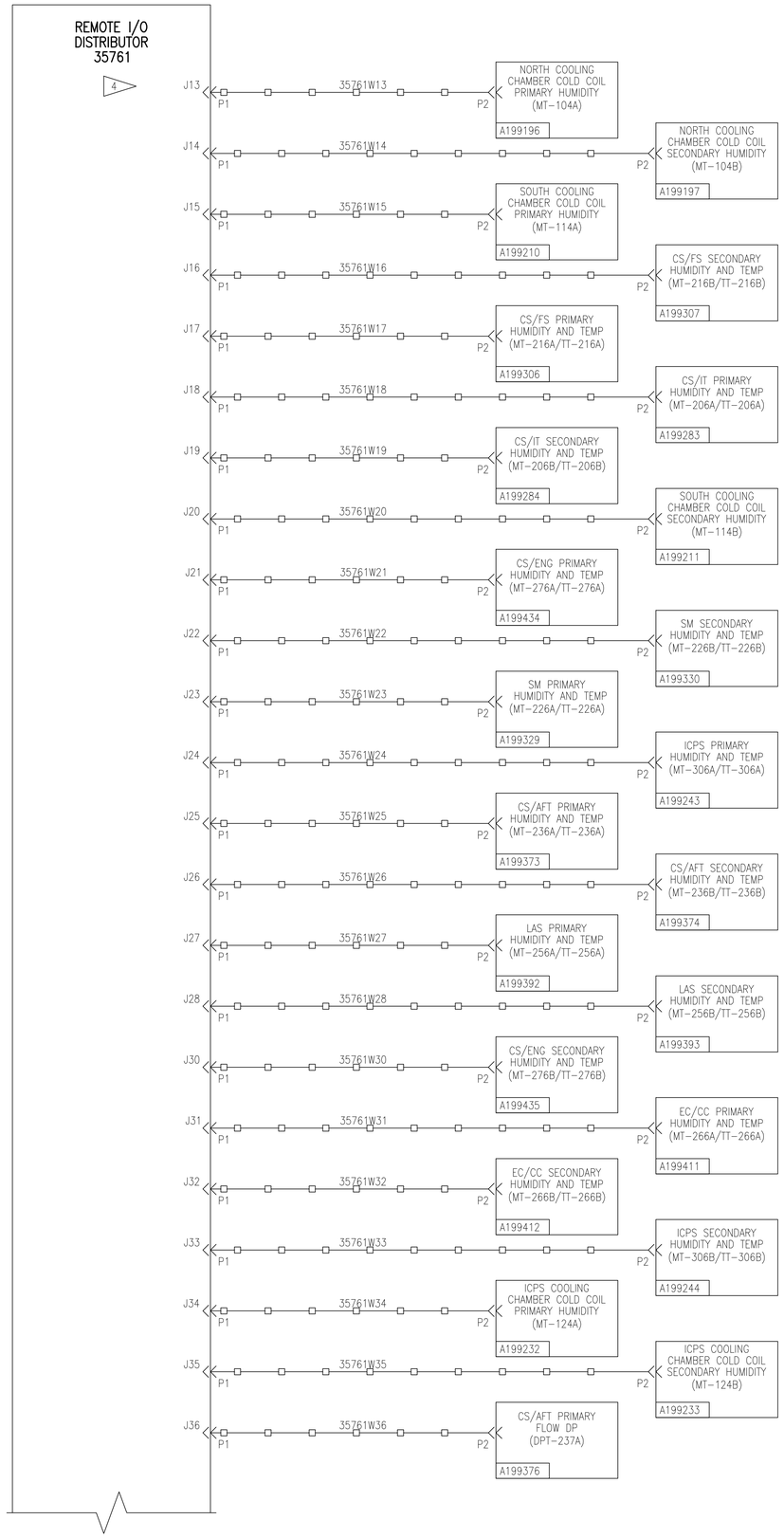

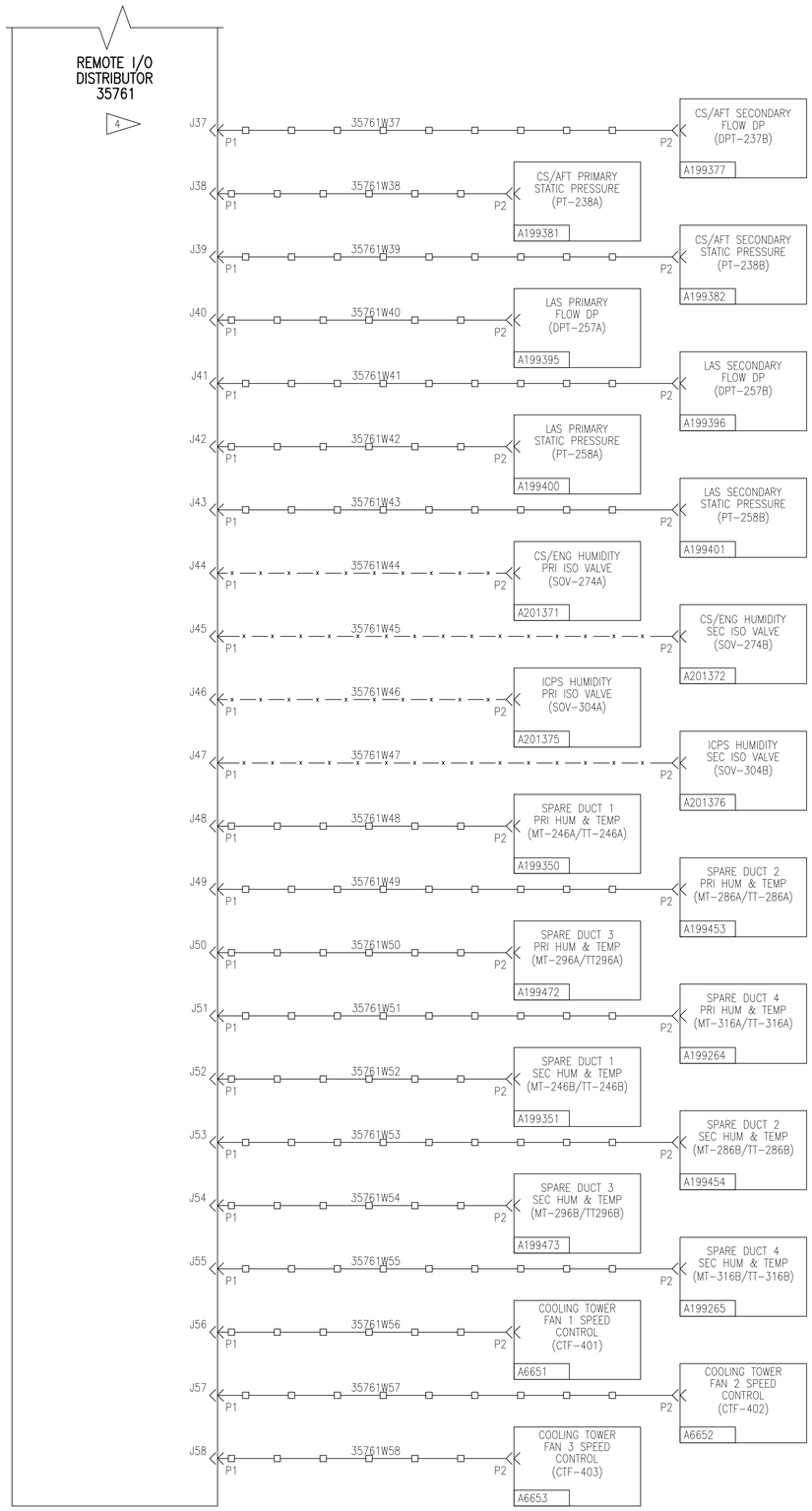

NOTES:

1. THE CONTRACTOR SHALL ADHERE TO THE FOLLOWING SPECIFICATIONS FOR ACCEPTABLE CABLE AND CONNECTOR TYPES, FABRICATION, AND INSTALLATION:
   - KSC-E-165
   - KSC-E-166
   - SSPC SP-1 GUIDELINES
   - NASA-STD-5008 (LATEST VERSION)
   - MIL-DTL-5541
   - 120E3100001 (HEAVY DUTY CABLE SPECIFICATION, GENERAL)
   - 120E3100003 (ELECTRICAL CABLE FABRICATION REQUIREMENTS)
2. THIS ONE-LINE DEPICTS FINAL CONNECTOR AND CABLING ARRANGEMENT AFTER THE REMOTE I/O CONNECTORS AND CABLING HAVE BEEN MODIFIED.
3. REFERENCE SHEETS I-014 AND I-015 FOR 28VDC POWER AND CONTROLNET CONNECTORS AND CABLING DETAILS.

△4 UNLESS OTHERWISE NOTED EXISTING REMOTE I/O ENCLOSURE CABLES W13 THROUGH W33 SHALL BE REMOVED. THESE CABLES SHALL BE CAREFULLY COILED AND SAVED. THE CONTRACTOR MAY ELECT TO REUSE THESE CABLES. IN PLACE OF NEW CABLES FOR SIGNALS DESCRIBED IN ANY OF THE ONE-LINES CONTAINED WITHIN THE INSTRUMENTATION DRAWINGS. ALL CABLES THAT THE CONTRACTOR DECIDES TO REUSE MUST BE APPROVED BY THE NASA CONTRACTING OFFICER.

5. UNLESS OTHERWISE SPECIFIED ALL CABLING SHOWN ON THIS SHEET SHALL BE NEW. THESE CABLES SHALL BE PROVIDED BY AND INSTALLED BY THE CONTRACTOR.
6. REFERENCE SHEET I-101 FOR ADDITIONAL CABLE SPECIFICATION AND FABRICATION DETAILS.

△7 REFERENCE NASA DOCUMENT 120E3100001, "SPECIFICATION FOR HEAVY DUTY GSE CABLE, GENERAL". ALL CABLES USED FOR THE INTERCONNECTION OF ECS EQUIPMENT AND ENCLOSURES SHALL CONFORM TO THESE SPECIFICATIONS.

△8 REFERENCE APPENDIX A OF DOCUMENT 120E3100001 FOR INDIVIDUAL CABLE SPECIFICATIONS.

△7 △8 CABLE SPECIFICATION TABLE

LINE SYMBOL	CABLE SPECIFICATION
—□—□—	120E3100001-001
-//-//-//-//-//-//-	120E3100001-004
— — — — — — —	120E3100001-051
—x—x—x—x—x—	120E3100001-006

SYM	ZONE	DESCRIPTION	DATE	APPROVED
REVISIONS				

JACOBS
Jacobs Technology Inc.

SIGNATURES		DATE
DRAWN	M. HENNIGH	3/07/14
CHECKED	J. WHITEFORD	3/07/14
SUBMITTED	S. RITTER	3/07/14
ST OF LICENSURE: TN LICENSE NO: 00110556		
APPROVED	G. WARD	3/07/14
	S. HUNT	3/07/14

NATIONAL AERONAUTICS AND SPACE ADMINISTRATION
JOHN F. KENNEDY SPACE CENTER, NASA
KENNEDY SPACE CENTER, FLORIDA

KSC LAUNCH PAD 39-B
ENVIRONMENTAL CONTROL SYSTEM (ECS) REFURBISHMENT
INSTRUMENTATION
ECS LP SYSTEM A1/B1 CHASSIS 35761
CONTROLS ONE-LINE

I-057

FILE NO.	SIZE	DWG.NO.	REV
	F	79K39602	

PCN. NO. 98898 SHEET 140 OF 187

P:\95452\DRAWINGS\INSTWU-057.DWG 10-DEC-2013 16:21 HARDYDR

GENERAL NOTES:

1. THE REMOTE I/O ENCLOSURE 37568 LAYOUTS AND DETAILS ON SHEETS I-059 THROUGH I-061 ARE INTENDED TO CONVEY TO THE CONTRACTOR THE REQUIREMENTS FOR THE LAYOUT, FABRICATION, AND INSTALLATION OF THE NEW REMOTE I/O ENCLOSURE 37568. THESE SHEETS SHALL NOT BE USED FOR FABRICATION. SHEETS I-059 THROUGH I-061 ARE FOR REFERENCE ONLY. THE CONTRACTOR SHALL REFERENCE THESE SHEETS AS A GUIDE TO GENERATE THE DETAILED DESIGN DRAWINGS FOR THE 37568 ENCLOSURE LAYOUTS, DEVICE TERMINATIONS, AND WIRING. THE DETAILED DESIGN DRAWINGS GENERATED BY THE CONTRACTOR SHALL BE APPROVED BY THE NASA CONTRACTING OFFICER BEFORE THE CONTRACTOR BEGINS FABRICATION.

2. FABRICATION OF ENCLOSURE 37568 SHALL OCCUR AT THE CONTRACTORS FABRICATION SHOP. THE ENCLOSURE SHALL GO THROUGH FACTORY ACCEPTANCE TESTING, WITNESSED AND APPROVED BY THE NASA CONTRACTING OFFICER, BEFORE SHIPMENT TO THE INSTALLATION SITE.

3. REMOTE I/O ENCLOSURE 37568, ALL INTERNAL WIRING AND EQUIPMENT SHALL BE PROVIDED AND INSTALLED BY THE CONTRACTOR.

4. REFERENCE SHEET I-061 FOR CABLE ROUTING DETAILS BETWEEN REMOTE I/O ENCLOSURE 37568 AND FIELD DEVICES.

5. ALL WIRING FROM ENCLOSURE INTERFACE CONNECTORS SHALL BE LANDED ON THE FIELD INTERFACE TERMINAL BLOCKS BEFORE TERMINATING TO INTERNAL ENCLOSURE DEVICES.

FABRICATION NOTES:

1. AFTER FACTORY TESTING AND ACCEPTANCE BY THE INSPECTION AGENCY REPRESENTATIVE AND PRIOR TO SHIPMENT OF THE CONTRACT END ITEM, AFFIX A NASA GROUND SUPPORT EQUIPMENT, IDENTIFICATION PLATE (REFERENCE: I-074) TO THE FINISHED ITEM, APPROXIMATELY WHERE SHOWN AND ADHERE USING SILICONE ADHESIVE SEALANT CONFORMING TO MIL-A-46146. THE IDENTIFICATION TAG SHALL BE ELECTROCHEMICALLY ETCHED (TYPE II), DIE STAMPED (TYPE V), ENGRAVED (TYPE VII), OR LASER ENGRAVED (TYPE VIII)--SEE MIL-STD-792--WITH VERTICAL, .100 INCH, SANS SERIF, GOTHIC CHARACTERS, CENTERED BOTH HORIZONTALLY AND VERTICALLY. THE SPECIFIC DATA AND THE TYPE OF DATA REQUIREMENT TO BE ENTERED ON THE ID PLATE BY THE MANUFACTURER SHALL BE SIMILAR TO TABLE 7 ON SHEET I-074. AFTER DATA ENTRY, COVER THE FACE OF THE IDENTIFICATION PLATE WITH ACRYLIC CRYSTAL CLEAR K01303, KRYLON CORP., 101 PROSPECT AVE, CLEVELAND, OH, OR ENGINEERING APPROVED EQUAL.

2. PERFECT ORIENTATION, COAXIALITY, OR SYMMETRY AT MMC FOR INTERRELATED FEATURES IS REQUIRED UNLESS SEPARATE TOLERANCES ARE SHOWN AT THE FEATURE. GENERAL DRAWING TOLERANCE DOES NOT APPLY TO IMPLIED 90° ANGLES.

3. TORQUE MIL-DTL-38999 CONNECTOR JAM NUTS IN ACCORDANCE WITH RECOMMENDED JAM NUT TORQUE VALUES FROM MIL-DTL-38999 SPECIFICATION.

4. REMOVE SCALE AND BURRS AND BREAK SHARP CORNERS AND EDGES.

5. UNLESS OTHERWISE SPECIFIED, FABRICATION OF ELECTRICAL GROUND SUPPORT EQUIPMENT SHALL BE IN ACCORDANCE WITH KSC-E-165 AND KSC-E-166.

6. UNLESS OTHERWISE SPECIFIED, ELECTRICAL PART SUBSTITUTIONS SHALL BE APPROVED BY NASA CONTRACTING OFFICER.

7. AFTER VERIFYING INTENDED CONNECTOR FLANGE PLACEMENT TO INSIDE OR OUTSIDE OF PANEL, PERFORM THE FOLLOWING: MECHANICALLY REMOVE PROTECTIVE COATINGS, AND/OR CONTAMINATION FROM THE CONNECTOR FLANGE MOUNTING LOCATIONS ON PANEL SURFACES TO BARE METAL (OR CONDUCTIVE PLATING) IN ACCORDANCE WITH KSC-E-166 PARAGRAH 3.12.3 AND FIGURE 10. (NOTE: GRINDING IS PROHIBITED. USE PILOT BONDING BRUSH, WIRE BRUSH, SCOTCHBRITE, OR SANDPAPER (400 GRIT AND FINER) FOR MECHANICAL REMOVAL). CLEAN FAYING SURFACES OF CONNECTOR FLANGES AND PANEL IN ACCORDANCE WITH SSPC SP1 (SOLVENT CLEANING). INSPECT SURFACES FOR ANY REMAINING CONTAMINATION AND, IF NECESSARY, RECLEAN IN ACCORDANCE WITH SSPC SP2 (HANDTOOL CLEANING). APPLY A THIN, CONTINUOUS COATING OF GREASE (ITEM 11 ON SHEET I-069) TO FAYING SURFACES. AFTER INSTALLING CONNECTORS, REMOVE EXCESS GREASE WITH A CLEAN, DRY, LINT-FREE RAG. PERFORM DC RESISTANCE CHECK FROM EACH CONNECTOR SHELL TO ADJACENT PANEL. DC RESISTANCE SHALL NOT EXCEED 2.5 MILLIOHMS. PRIOR TO TOUCH UP OF DISTURBED CARBON STEEL AND STAINLESS STEEL FINISH COATINGS, DEGREASE, CLEAN AND DRY THE AFFECTED SURFACES PER THE GUIDELINES IN SSPC SP-1. USING NASA-STD-5008 TABLE 1 AS A GUIDE, BRUSH COAT THE AFFECTED SURFACES, MATCHING COLOR AND PHYSICAL CHARACTERISTICS OF THE ORIGINAL FINISH. TOUCH UP DISTURBED ANODIZED ALUMINUM COATINGS PER MIL-DTL-5541, TYPE I, CLASS IA, BY BRUSH APPLICATION.

8. PRIOR TO GROUND BUS INSTALLATION, APPLY A THIN COAT OF GREASE (ITEM 11 ON SHEET I-069) TO FAYING SURFACES OF STUD AND PANEL DURING STUD INSTALLATION. PERFORM DC RESISTANCE CHECK OF STUD TO PANEL AFTER INSTALLATION. DC RESISTANCE SHALL NOT EXCEED 2.5 MILLIOHMS. TOUCH UP DISTURBED COATINGS AROUND MOUNTING HOLE LOCATIONS PER THE GUIDELINES IDENTIFIED IN NASA-STD-5008 PARAGRAPHS 4.4.3.8 AND 4.5.8 ALONG WITH TABLE 1. AFFIX GROUND SYMBOL LABEL (ITEM 15 ON SHEET I-069) ON PANEL EXTERIOR ADJACENT TO STUD NUTS.

9. FOR DIN RAILS CARRYING SHIELD GROUND, PERFORM THE FOLLOWING STEPS AT BOTH ENDS OF DIN RAIL TO PROVIDE BONDING PRIOR TO INSTALLATION TO THE PANEL: APPLY A THIN COAT OF GREASE (ITEM 11 ON SHEET I-069) TO FAYING SURFACES OF DIN RAIL AND PANEL PRIOR TO RAIL INSTALLATION. PERFORM DC RESISTANCE CHECK OF RAIL TO PANEL AFTER INSTALLATION. DC RESISTANCE SHALL NOT EXCEED 2.5 MILLIOHMS. AFFIX GROUND SYMBOL LABEL (ITEM 5 ON SHEET I-069) ON RAIL ADJACENT TO END FASTENERS.

10. REMOVE AND REINSTALL CENTER POST AS REQUIRED DURING PERFORMANCE OF WORK.

11. ENGRAVE (TYPE VII) TEXT ON PLASTIC LAMINATE REFERENCE DESIGNATION PLATE AS SHOWN ON DRAWING DETAIL PER THE PROVISIONS IN MIL-STD-792 AND THE GENERAL REQUIREMENTS (PARAGRAPH 3.1) AND QUALITY ASSURANCE PROVISIONS (PARAGRAPH 4) OF KSC-STD-E-0015.

12. LOCATE PLASTIC LAMINATE REFERENCE DESIGNATION PLATES APPROXIMATELY AS SHOWN AND ADHERE USING SILICONE ADHESIVE SEALANT CONFORMING TO MIL-A-46146, GROUP I (ITEM 35).

13. INSTALL TERMINAL BLOCK NUMBER/LETTER LABELS ON TERMINAL BLOCKS AND ID CARRIERS PER MANUFACTURERS INSTRUCTIONS. VALUES PRINTED USING MANUFACTURERS RECOMMENDED METHOD.

14. CUT CONDUCTORS TO LENGTH AT TIME OF INSTALLATION.

15. TERMINATION OF STRANDED CONDUCTORS IN CRIMP TYPE TERMINAL LUG CONNECTIONS SHALL BE IN ACCORDANCE WITH SPECIFICATION 79K22638, PARAGRAPH 3.5.1 AND NASA-STD-8739.4, PARAGRAPHS 6.6.1 AND 10.1.1 THROUGH 10.1.4.

16. FOR TERMINATION OF CONDUCTORS IN TERMINAL BLOCK CONNECTIONS, STRIP WIRE INSULATION IN ACCORDANCE WITH THE PROVISIONS OF NASA-STD-8739.4, PARAGRAPH 10.1.1 THROUGH 10.1.4. INSULATION STRIP LENGTH AND INSERTION PROCEDURE SHALL BE IN ACCORDANCE WITH TERMINAL BLOCK MANUFACTURER INSTRUCTIONS, INCLUDING VERIFICATION OF POST INSERTION CLEARANCES.

17. UNLESS OTHERWISE SPECIFIED, FASTENING HARDWARE SHALL BE TORQUED OR TIGHTENED "SNUG-TIGHT" AS FOLLOWS: A MECHANIC OR TECHNICIAN SHALL TIGHTEN THE FASTENING ASSEMBLY WITH STANDARD TOOLS, USING ORDINARY FORCE, UNTIL THE ASSEMBLY LAYERS COME INTO FIRM CONTACT, DETERMINED VISUALLY BY FEEL.

18. INSTALL SAFETY WIRE (ITEM 50 ON SHEET I-069) IN ACCORDANCE WITH AIA/NAS NASM33540. MATERIAL SHALL BE PER AIA/NAS NASM20995 TYPE C (SST).

19. DURING EQUIPMENT ASSEMBLY, STORAGE AND SHIPMENT, ALL EXPOSED ELECTRICAL CONNECTOR ENDS SHALL BE PROTECTED WITH THE CONNECTOR CAPS THAT WERE INSTALLED AS PART OF CABLE HARNESS FABRICATION. REMOVE CONNECTOR CAPS PRIOR TO INSTALLATION. ALL SPARE AND UNUSED CONNECTORS SHALL BE PROTECTED USING MANUFACTURERS SUGGESTED DUST CAPS. THESE DUST CAPS SHALL BE SUPPLIED AND INSTALLED BY THE CONTRACTOR PER MANUFACTURERS INSTRUCTIONS.

SYM	ZONE	DESCRIPTION	DATE	APPROVED
REVISIONS				

JACOBS
Jacobs Technology Inc.

SIGNATURES		DATE
DRAWN	M. HENNIGH	3/07/14
CHECKED	J. WHITEFORD	3/07/14
SUBMITTED	S. RITTER	3/07/14
ST OF LICENSURE: TN LICENSE NO: 00110556		
APPROVED	G. WARD	3/07/14
	S. HUNT	3/07/14

NATIONAL AERONAUTICS AND SPACE ADMINISTRATION
JOHN F. KENNEDY SPACE CENTER, NASA
KENNEDY SPACE CENTER, FLORIDA

KSC LAUNCH PAD 39-B
ENVIRONMENTAL CONTROL SYSTEM (ECS) REFURBISHMENT
INSTRUMENTATION
110VAC REGULATED/UNREGULATED
DIST. PANEL 37568 GENERAL NOTES

I-058

FILE NO. | SIZE F | DWG.NO. 79K39602 | REV

PCN. NO. 98898 | SHEET 141 OF 187

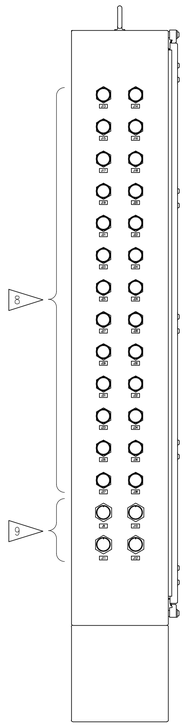

LEFT SIDE VIEW

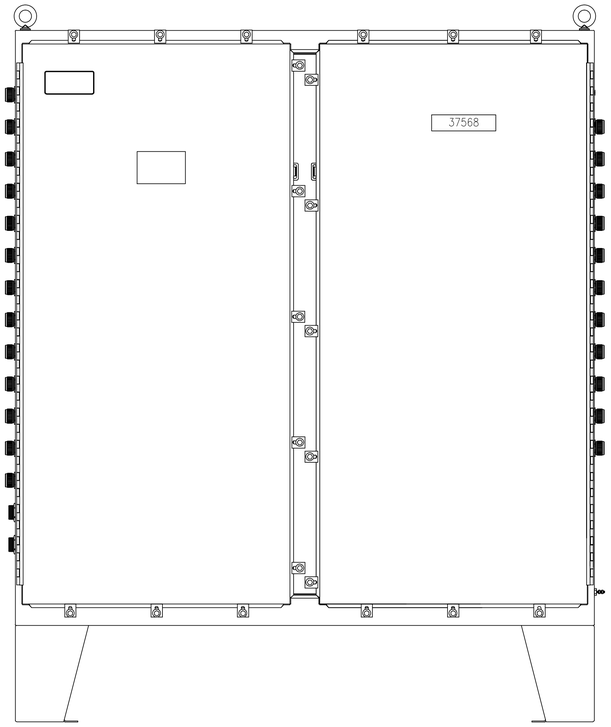

FRONT VIEW

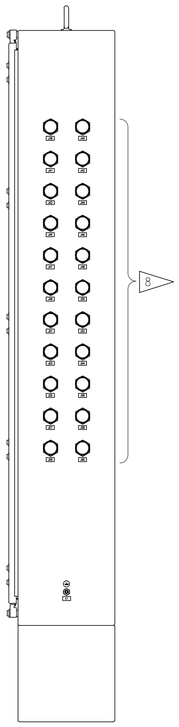

RIGHT SIDE VIEW

DETAIL 1
CONNECTOR MODIFICATIONS 12

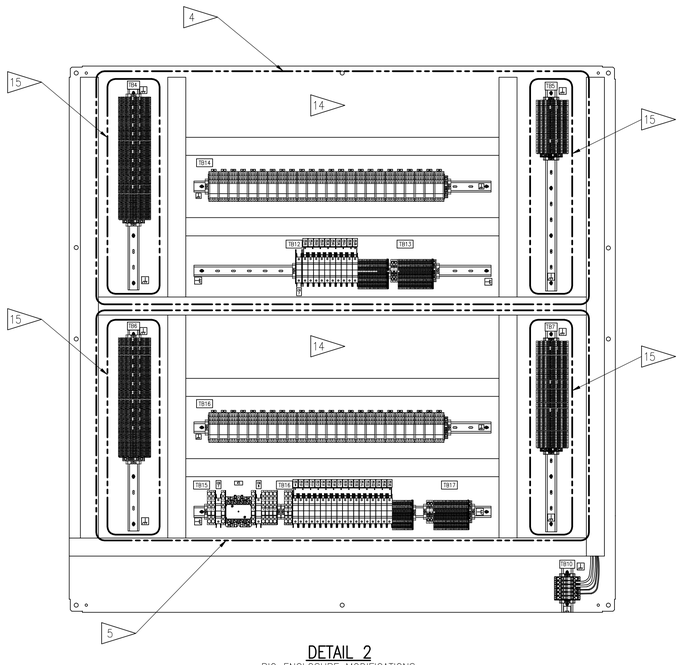

DETAIL 2
RIO ENCLOSURE MODIFICATIONS

DEMO & MODIFICATIONS NOTES:

GENERAL:

1. THIS SHEET DETAILS ALL OF THE CONNECTORS AND EQUIPMENT REQUIRED FOR ENCLOSURE 37568.
2. UNLESS OTHERWISE NOTED THE CONTRACTOR SHALL SUPPLY AND INSTALL ENCLOSURE AND ALL EQUIPMENT REQUIRED TO DISTRIBUTE THE REGULATED AND UNREGULATED 110VAC PER SHEETS I-058 THROUGH I-061, I-095, AND I-096.
3. UNLESS OTHERWISE SPECIFIED, FABRICATION/MODIFICATION OF ELECTRICAL GROUND SUPPORT EQUIPMENT SHALL BE IN ACCORDANCE WITH KSC-E-165 AND KSC-E-166.

4 ALL EQUIPMENT FOR UNREGULATED 110VAC DISTRIBUTION SHALL BE SUPPLIED AND INSTALLED BY CONTRACTOR. THE CONTRACTOR SHALL USE THE SAME PARTS AND EQUIPMENT ARRANGEMENT AS IN THE EXISTING 35424 REMOTE I/O ENCLOSURE. SEE SHEET I-095 FOR CONNECTION SCHEMATIC.

5 ALL EQUIPMENT FOR REGULATED 110VAC DISTRIBUTION IS RELOCATED FROM ENCLOSURE 35425. THE CONTRACTOR SHOULD ONLY HAVE TO SUPPLY ADDITIONAL FIELD INTERFACE TERMINAL BLOCKS. SEE SHEET I-096 FOR CONNECTION SCHEMATIC.

6. NASA SHALL PROVIDE DRAWINGS OF EXISTING ENCLOSURE 35424. THE CONTRACTOR SHALL USE THESE DRAWINGS AS REFERENCE TO DESIGN AND FABRICATE THE 110VAC UNREGULATED POWER DISTRIBUTION FOR ENCLOSURE 37568. THESE DRAWINGS SHALL BE PROVIDED AFTER THE CONTRACT HAS BEEN AWARDED.
7. CONTRACTOR SHALL PROVIDE DETAILED DRAWINGS OF MODIFIED ENCLOSURE 37568, DEVICE TERMINATIONS, AND WIRING.

ENCLOSURE CONNECTORS:

8 CONNECTORS J13 THROUGH J60 SHALL BE JAM NUT RECEPTACLES OF TYPE MS3454LS16-10S.

9 CONNECTORS J9 THROUGH J12 SHALL BE JAM NUT RECEPTACLES OF TYPE MS3454LS28-3S.

10. ALL CONNECTORS REQUIRE SAFETY WIRE IN ACCORDANCE WITH AIA/NAS NASM33540. SAFETY WIRE MATERIAL SHALL BE PER AIA/NAS NASM20995 TYPE C (SST).
11. THE CONTRACTOR SHALL INSTALL AND POT ALL CONNECTORS IN ACCORDANCE WITH MIL-DTL-38999 AND KSC-STD-132.

12 THE CONTRACTOR SHALL SUPPLY AND INSTALL DUST-CAPS FOR ALL SPARE AND UNUSED CONNECTORS.

13. REFERENCE DEVICE POWER SCHEDULES ON SHEET I-060 FOR CONNECTOR DETAILS.

ENCLOSURE WIRING:

14 CONTRACTOR SHALL USE SHEETS I-095 AND I-096 TO INSTALL ALL INTERNAL REGULATED AND UNREGULATED AC POWER WIRING.

15 CONTRACTOR SHALL SUPPLY AND INSTALL ALL FIELD INTERFACE TERMINAL BLOCKS REQUIRED TO TERMINATE ALL WIRING BETWEEN 110VAC DISTRIBUTION EQUIPMENT AND ENCLOSURE INTERFACE CONNECTORS.

16. ALL WIRING FROM ENCLOSURE INTERFACE CONNECTORS SHALL BE LANDED ON THE FIELD INTERFACE TERMINAL BLOCKS BEFORE TERMINATING TO THE INTERNAL ENCLOSURE DEVICES.

SYM	ZONE	DESCRIPTION	DATE	APPROVED
		REVISIONS		

SIGNATURES		DATE
DRAWN	M. HENNIGH	3/07/14
CHECKED	J. WHITEFORD	3/07/14
SUBMITTED	S. RITTER	3/07/14
ST OF LICENSURE: TN LICENSE NO: 00110556		
APPROVED	G. WARD	3/07/14
	S. HUNT	3/07/14

JACOBS
Jacobs Technology Inc.

NATIONAL AERONAUTICS AND SPACE ADMINISTRATION
JOHN F. KENNEDY SPACE CENTER, NASA
KENNEDY SPACE CENTER, FLORIDA

KSC LAUNCH PAD 39-B
ENVIRONMENTAL CONTROL SYSTEM (ECS) REFURBISHMENT
INSTRUMENTATION
110VAC REGULATED/UNREGULATED
DIST. PANEL 37568 ASSEMBLY

FILE NO.	SIZE	DWG.NO.	REV
	F	79K39602	
PCN. NO. 98898		SHEET 142 OF 187	

I-059

DEMO & MODIFICATION NOTES:
GENERAL:

1 THIS 110VAC DISTRIBUTION TABLE DETAILS ALL DEVICES, CONNECTED TO REMOTE I/O ENCLOSURE 37568 WHICH REQUIRE REGULATED OR UNREGULATED 110VAC POWER.

1 POWER DISTRIBUTION CABINET 37568 REGULATED AC DEVICE POWER SCHEDULE

MAIN AC POWER BUS	CABINET TB DESIGNATION	CIRCUIT BREAKER	SECONDARY AC POWER BUS	CABINET TB DESIGNATION	CABINET INTERFACE CONNECTOR	DEVICE(S) SERVICED	REF. SHEET
T112 MCC-A AND MCC-C (SYSTEM A AND SYSTEM B) SWITCHED FROM 37568	TB-16 (1 THRU 2)	CB-9	T112A	TB16-3	37568 - J13	FCV-205	I-088
		CB-10	T112B	TB16-4	37568 - J14	FCV-215	I-088
		CB-11	T112C	TB16-5	37568 - J15	FCV-225	I-088
		CB-12	T112D	TB16-6	37568 - J16	FCV-235	I-088
					37568 - J20	TCV-518	I-088
		CB-13	T112E	TB16-7	37568 - J17	FCV-245 (SPARE DUCT 1)	I-088
					37568 - J18	TCV-517	I-088
		CB-14	T112F	TB16-8	37568 - J19	FCV-255	I-088
					37568 - J61	MOV-701A	I-099
		CB-15	T112G	TB16-9	37568 - J21	FCV-265	I-088
					37568 - J22	TCV-519	I-088
		CB-16	T112H	TB16-10	37568 - J23	FCV-275	I-088
					37568 - J62	MOV-701B	I-099
		CB-17	T112J	TB16-11	37568 - J24	FCV-285 (SPARE DUCT 2)	I-088
					37568 - J25	FCV-303B	I-079
		CB-18	T112K	TB16-12	37568 - J26	FCV-295 (SPARE DUCT 3)	I-088
					37568 - J27	FCV-303A	I-079
		CB-19	T112L	TB16-13	37568 - J28	FCV-305	I-088
					37568 - J29	FCV-273B	I-079
		CB-20	T112M	TB16-14	37568 - J30	FCV-315 (SPARE DUCT 4)	I-088
					37568 - J31	FCV-273A	I-079
		CB-21	T112N	TB16-15	37568 - J32	PCV-015A	I-079
					37568 - J33	FCV-233B	I-079
		CB-22	T112P	TB16-16	37568 - J34	PCV-015B	I-079
					37568 - J35	FCV-233A	I-079
		CB-23	T112R	TB16-17	37568 - J36	PCV-010A	I-079
					37568 - J37	FCV-223B	I-079
		CB-24	T112S	TB16-18	37568 - J38	PCV-010B	I-079
					37568 - J39	FCV-223A	I-079
		CB-25	T112T	TB16-19	37568 - J40	PCV-014A	I-079
					37568 - J41	FCV-213B	I-079
		CB-26	T112U	TB16-20	37568 - J42	PCV-014B	I-079
					37568 - J43	FCV-213A	I-079

RIO CABINET 37568 UNREGULATED AC DEVICE POWER SCHEDULE

MAIN AC POWER BUS	CABINET TB DESIGNATION	CIRCUIT BREAKER	SECONDARY AC POWER BUS	CABINET TB DESIGNATION	CABINET INTERFACE CONNECTOR	DEVICE SERVICED	REF. SHEET
T211 MCC-D AND MCC-B (SYSTEM B AND SYSTEM A) SWITCHED FROM 35424	TB-12 (1 THRU 2)	CB-30	T211A	TB12-3	37568 - J48	MOV-017	I-099
		CB-31	T211B	TB12-4	37568 - J49	MOV-018	I-099
		CB-32	T211C	TB12-5	37568 - J50	MOV-019	I-099
		CB-33	T211D	TB12-6	37568 - J51	MOV-020	I-099
		CB-34	T211E	TB12-7	37568 - J52	MOV-021	I-099
		CB-35	T211F	TB12-8	37568 - J53	MOV-022	I-099
		CB-36	T211G	TB12-9	37568 - J54	MOV-023	I-099
		CB-37	T211H	TB12-10	37568 - J55	MOV-300A	I-100
		CB-38	T211J	TB12-11	37568 - J56	MOV-240A	I-100
		CB-39	T211K	TB12-12	37568 - J57	MOV-300B	I-100
					37568 - J58	MOV-240B	I-100

SYM	ZONE	DESCRIPTION	DATE	APPROVED
REVISIONS				

JACOBS
Jacobs Technology Inc.

SIGNATURES		DATE
DRAWN	M. HENNIGH	3/07/14
CHECKED	J. WHITEFORD	3/07/14
SUBMITTED	S. RITTER	3/07/14
ST OF LICENSURE: TN LICENSE NO: 00110556		
APPROVED	G. WARD	3/07/14
	S. HUNT	3/07/14

NATIONAL AERONAUTICS AND SPACE ADMINISTRATION
JOHN F. KENNEDY SPACE CENTER, NASA
KENNEDY SPACE CENTER, FLORIDA

KSC LAUNCH PAD 39-B
ENVIRONMENTAL CONTROL SYSTEM (ECS) REFURBISHMENT
INSTRUMENTATION
110VAC REGULATED/UNREGULATED
DIST. PANEL 37568 POWER DIST. TABLE

FILE NO.	SIZE	DWG.NO.	REV
	F	79K39602	
PCN. NO. 98898		SHEET 143 OF 187	

I-060

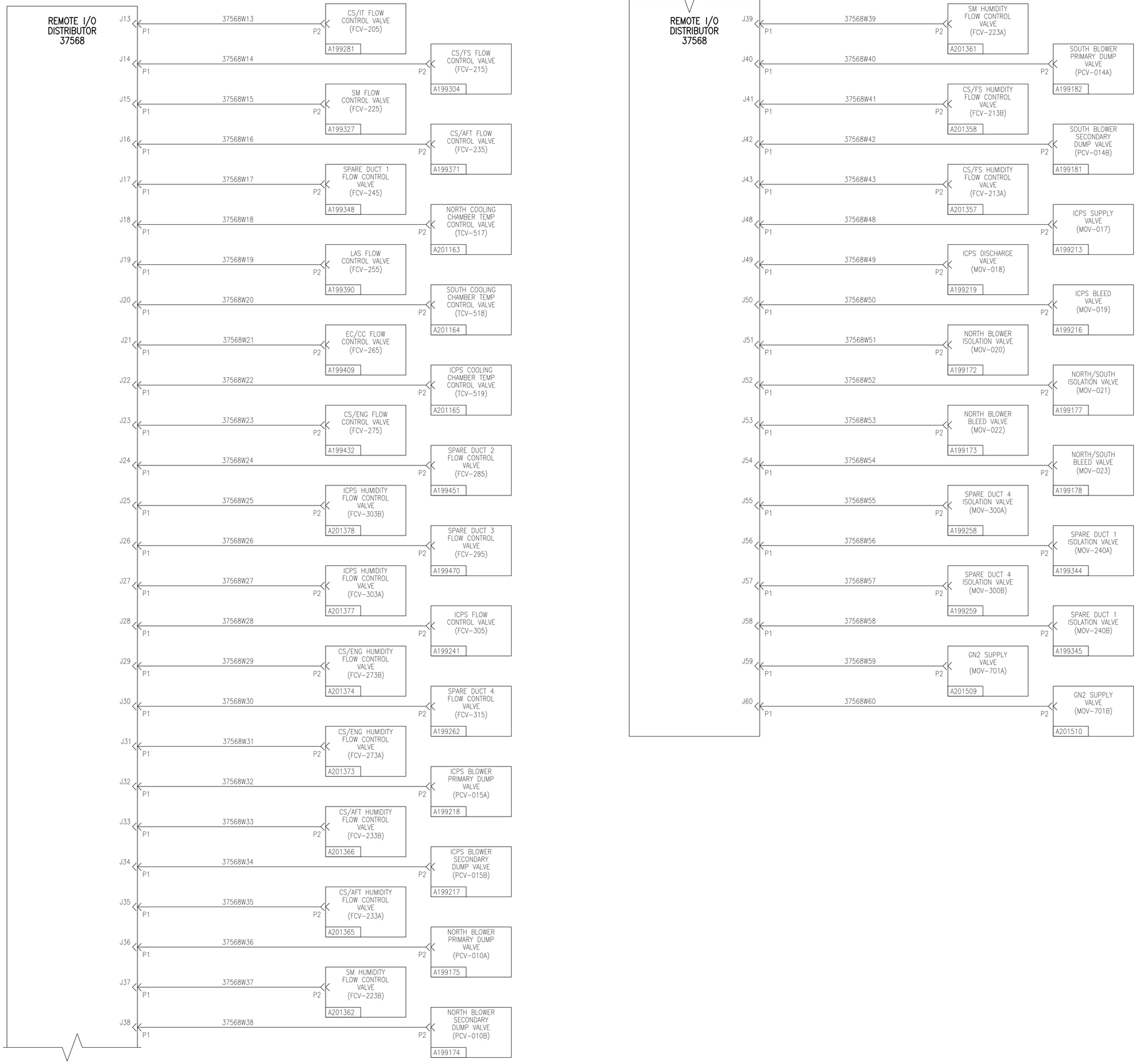

NOTES:

1. THE CONTRACTOR SHALL ADHERE TO THE FOLLOWING SPECIFICATIONS FOR ACCEPTABLE CABLE AND CONNECTOR TYPES, FABRICATION, AND INSTALLATION:
   - KSC-E-165
   - KSC-E-166
   - SSPC SP-1 GUIDELINES
   - NASA-STD-5008 (LATEST VERSION)
   - MIL-DTL-5541
   - 120E3100001 (HEAVY DUTY CABLE SPECIFICATION, GENERAL)
   - 120E3100003 (ELECTRICAL CABLE FABRICATION REQUIREMENTS)
2. THIS ONE-LINE DEPICTS FINAL CONNECTOR AND CABLING ARRANGEMENT AFTER THE REMOTE I/O CONNECTORS AND CABLING HAVE BEEN MODIFIED.
3. REFERENCE SHEETS I-014 AND I-015 FOR 28VDC POWER AND CONTROLNET CONNECTORS AND CABLING DETAILS.
4. UNLESS OTHERWISE SPECIFIED ALL CABLING SHOWN ON THIS SHEET SHALL BE NEW. THESE CABLES SHALL BE PROVIDED BY AND INSTALLED BY THE CONTRACTOR.
5. REFERENCE SHEET I-101 FOR ADDITIONAL CABLE SPECIFICATION AND FABRICATION DETAILS.
6. REFERENCE NASA DOCUMENT 120E3100001, "SPECIFICATION FOR HEAVY DUTY GSE CABLE, GENERAL". ALL CABLES USED FOR THE INTERCONNECTION OF ECS EQUIPMENT AND ENCLOSURES SHALL CONFORM TO THESE SPECIFICATIONS.
7. ALL 110VAC REGULATED AND UNREGULATED POWER CABLE SHALL BE OF TYPE 120E3100001-049. REFERENCE DOCUMENT 120E3100001 FOR DETAILED CABLE SPECIFICATIONS.

SYM	ZONE	DESCRIPTION	DATE	APPROVED
REVISIONS				

JACOBS
Jacobs Technology Inc.

SIGNATURES		DATE
DRAWN	M. HENNIGH	3/07/14
CHECKED	J. WHITEFORD	3/07/14
SUBMITTED	S. RITTER	3/07/14
ST OF LICENSURE: TN LICENSE NO: 00110556		
APPROVED	G. WARD	3/07/14
	S. HUNT	3/07/14

NATIONAL AERONAUTICS AND SPACE ADMINISTRATION
JOHN F. KENNEDY SPACE CENTER, NASA
KENNEDY SPACE CENTER, FLORIDA

KSC LAUNCH PAD 39-B
ENVIRONMENTAL CONTROL SYSTEM (ECS) REFURBISHMENT
INSTRUMENTATION
ECS LP REGULATED/UNREGULATED 110VAC
CHASSIS 37568 CONTROLS ONE-LINE

I-061

FILE NO. | SIZE F | DWG.NO. 79K39602 | REV
PCN. NO. 98898 | SHEET 144 OF 187

ECS RIO CABINET 37462 SYSTEM A1

IDENT	TAG NAME	I/O TYPE	DESCRIPTION	RACK	SLOT	CH	DEVICE TAG	ENCLOSURE INTERFACE CONNECTOR	DEVICE REFERENCE SCHEMATIC	POWER SOURCE/BUS	POWER RETURN/ NEUTRAL	POWER REFERENCE SCHEMATIC	SIGNAL TYPE	SENSOR RANGE	UNITS
1756-IF6I ISOLATED ANALOG VOLTAGE/CURRENT INPUT MODULE															
37462A-AI-1	37462_GSP_SYSA_SUP_V	AI	37462 GSP BUS A VDC (SUPPLY VOLTAGE = SIGNAL x 4)	A1	2	0	R2	N/A	I-093	N/A	TB3 D1R	I-093	0 - 10 VDC	0 - 10	VDC
37462A-AI-2		AI		A1	2	1									
37462A-AI-3		AI		A1	2	2									
37462A-AI-4		AI		A1	2	3									
† 37462A-AI-5	SPARE1_DPT247A_PRI_SIG	AI	SPARE DUCT 1 PRIMARY FLOW DIFFERENTIAL PRESSURE SIGNAL	A1	2	4	DPT-247A	37462 - J41	I-097	TB6 +D130D	TB3 D1R	I-094	0 - 5 VDC	TBD	PSID
† 37462A-AI-6	SPARE1_PT248A_PRI_SIG	AI	SPARE DUCT 1 PRIMARY STATIC PRESSURE SIGNAL	A1	2	5	PT-248A	37462 - J42	I-097	TB6 +D130D	TB3 D1R	I-094	0 - 5 VDC	TBD	PSIA
1756-IF6I ISOLATED ANALOG VOLTAGE/CURRENT INPUT MODULE															
37462A-AI-7	NB_DMP_PCV_010A_PER_OPN_IND	AI	NORTH BLOWER DUMP VALVE PCV-010A PERCENT OPEN INDICATION	A1	3	0	PCV-010A	37462 - J23	I-079	TB6 +D130A	TB3 D1R	I-094	4 - 20mA	0 - 100	% OPEN
37462A-AI-8	SB_DMP_PCV_014A_PER_OPN_IND	AI	SOUTH BLOWER DUMP VALVE PCV-014A PERCENT OPEN INDICATION	A1	3	1	PCV-014A	37462 - J24	I-079	TB6 +D130B	TB3 D1R	I-094	4 - 20mA	0 - 100	% OPEN
37462A-AI-9	ICPS_DMP_PCV_015A_PER_OPN_IND	AI	ICPS BLOWER DUMP VALVE PCV-015A PERCENT OPEN INDICATION	A1	3	2	PCV-015A	37462 - J25	I-079	TB6 +D130C	TB3 D1R	I-094	4 - 20mA	0 - 100	% OPEN
37462A-AI-10	N_CC_TCV_517_PRI_PER_OPN_IND	AI	NORTH COOLING CHAMBER VALVE TCV-517 PRIMARY PERCENT OPEN INDICATION	A1	3	3	TCV-517	37462 - J20	I-088	TB6 +D130D	TB3 D1R	I-094	4 - 20mA	0 - 100	% OPEN
37462A-AI-11	S_CC_TCV_518_PRI_PER_OPN_IND	AI	SOUTH COOLING CHAMBER VALVE TCV-518 PRIMARY PERCENT OPEN INDICATION	A1	3	4	TCV-518	37462 - J21	I-088	TB6 +D130E	TB3 D1R	I-094	4 - 20mA	0 - 100	% OPEN
37462A-AI-12	ICPS_CC_TCV_519_PRI_PER_OPN_IND	AI	ICPS COOLING CHAMBER VALVE TCV-519 PRIMARY PERCENT OPEN INDICATION	A1	3	5	TCV-519	37462 - J22	I-088	TB6 +D130F	TB3 D1R	I-094	4 - 20mA	0 - 100	% OPEN
1756-IF6I ISOLATED ANALOG VOLTAGE/CURRENT INPUT MODULE															
37462A-AI-13	EC_CC_DPT267A_PRI_SIG	AI	DUCT EC/CC PRIMARY FLOW DIFFERENTIAL PRESSURE SIGNAL	A1	4	0	DPT-267A	37462 - J29	I-097	TB6 +D130G	TB3 D1R	I-094	0 - 5 VDC	TBD	PSID
37462A-AI-14	CS_ENG_DPT277A_PRI_SIG	AI	DUCT CS/ENG PRIMARY FLOW DIFFERENTIAL PRESSURE SIGNAL	A1	4	1	DPT-277A	37462 - J31	I-097	TB6 +D130H	TB3 D1R	I-094	0 - 5 VDC	TBD	PSID
† 37462A-AI-15	SPARE2_DPT287A_PRI_SIG	AI	SPARE DUCT 2 PRIMARY FLOW DIFFERENTIAL PRESSURE SIGNAL	A1	4	2	DPT-287A	37462 - J49	I-097	TB6 +D130E	TB3 D1R	I-094	0 - 5 VDC	TBD	PSID
† 37462A-AI-16	SPARE3_DPT297A_PRI_SIG	AI	SPARE DUCT 3 PRIMARY FLOW DIFFERENTIAL PRESSURE SIGNAL	A1	4	3	DPT-297A	37462 - J50	I-097	TB6 +D130F	TB3 D1R	I-094	0 - 5 VDC	TBD	PSID
37462A-AI-17	ICPS_DPT307A_PRI_SIG	AI	DUCT ICPS PRIMARY FLOW DIFFERENTIAL PRESSURE SIGNAL	A1	4	4	DPT-307A	37462 - J33	I-097	TB6 +D130A	TB3 D1R	I-094	0 - 5 VDC	TBD	PSID
† 37462A-AI-18	SPARE4_DPT317A_PRI_SIG	AI	SPARE DUCT 4 PRIMARY FLOW DIFFERENTIAL PRESSURE SIGNAL	A1	4	5	DPT-317A	37462 - J51	I-097	TB6 +D130A	TB3 D1R	I-094	0 - 5 VDC	TBD	PSID
1756-IF6I ISOLATED ANALOG VOLTAGE/CURRENT INPUT MODULE															
37462A-AI-19	EC_CC_PT268A_PRI_SIG	AI	DUCT EC/CC PRIMARY STATIC PRESSURE SIGNAL	A1	5	0	PT-268A	37462 - J35	I-097	TB6 +D130B	TB3 D1R	I-094	0 - 5 VDC	TBD	PSIA
37462A-AI-20	CS_ENG_PT278A_PRI_SIG	AI	DUCT CS/ENG PRIMARY STATIC PRESSURE SIGNAL	A1	5	1	PT-278A	37462 - J37	I-097	TB6 +D130C	TB3 D1R	I-094	0 - 5 VDC	TBD	PSIA
† 37462A-AI-21	SPARE2_PT288A_PRI_SIG	AI	SPARE DUCT 2 PRIMARY STATIC PRESSURE SIGNAL	A1	5	2	PT-288A	37462 - J52	I-097	TB6 +D130E	TB3 D1R	I-094	0 - 5 VDC	TBD	PSIA
† 37462A-AI-22	SPARE3_PT298A_PRI_SIG	AI	SPARE DUCT 3 PRIMARY STATIC PRESSURE SIGNAL	A1	5	3	PT-298A	37462 - J53	I-097	TB6 +D130F	TB3 D1R	I-094	0 - 5 VDC	TBD	PSIA
37462A-AI-23	ICPS_PT308A_PRI_SIG	AI	DUCT ICPS PRIMARY STATIC PRESSURE SIGNAL	A1	5	4	PT-308A	37462 - J39	I-097	TB6 +D130D	TB3 D1R	I-094	0 - 5 VDC	TBD	PSIA
37462A-AI-24	SPARE4_PT318A_PRI_SIG	AI	SPARE DUCT 4 PRIMARY STATIC PRESSURE SIGNAL	A1	5	5	PT-318A	37462 - J54	I-097	TB6 +D130B	TB3 D1R	I-094	0 - 5 VDC	TBD	PSIA
1756-OF8 VOLTAGE/CURRENT ANALOG OUTPUT MODULE															
37462A-AO-1	NB_DMP_PCV_010A_OUT_ADJ	AO	NORTH BLOWER DUMP VALVE PCV-010A OUTPUT ADJUSTMENT	A1	6	0	PCV-010A	37462 - J23	I-079	I/O CHAN	I/O CHAN	-	4 - 20mA	0 - 100	% OPEN
37462A-AO-2	SB_DMP_PCV_014A_OUT_ADJ	AO	SOUTH BLOWER DUMP VALVE PCV-014A OUTPUT ADJUSTMENT	A1	6	1	PCV-014A	37462 - J24	I-079	I/O CHAN	I/O CHAN	-	4 - 20mA	0 - 100	% OPEN
37462A-AO-3	ICPS_DMP_PCV_015A_OUT_ADJ	AO	ICPS BLOWER DUMP VALVE PCV-015A OUTPUT ADJUSTMENT	A1	6	2	PCV-015A	37462 - J25	I-079	I/O CHAN	I/O CHAN	-	4 - 20mA	0 - 100	% OPEN
37462A-AO-4	N_CC_TCV_517_PRI_OUT_ADJ	AO	NORTH COOLING CHAMBER VALVE TCV-517 PRIMARY OUTPUT ADJUSTMENT	A1	6	3	TCV-517	37462 - J20	I-088	I/O CHAN	I/O CHAN	-	4 - 20mA	0 - 100	% OPEN
37462A-AO-5	S_CC_TCV_518_PRI_OUT_ADJ	AO	SOUTH COOLING CHAMBER VALVE TCV-518 PRIMARY OUTPUT ADJUSTMENT	A1	6	4	TCV-518	37462 - J21	I-088	I/O CHAN	I/O CHAN	-	4 - 20mA	0 - 100	% OPEN
37462A-AO-6	ICPS_CC_TCV_519_PRI_OUT_ADJ	AO	ICPS COOLING CHAMBER VALVE TCV-519 PRIMARY OUTPUT ADJUSTMENT	A1	6	5	TCV-519	37462 - J22	I-088	I/O CHAN	I/O CHAN	-	4 - 20mA	0 - 100	% OPEN
37462A-AO-7		AO		A1	6	6									
37462A-AO-8		AO		A1	6	7									
1756-OF8 VOLTAGE/CURRENT ANALOG OUTPUT MODULE															
37462A-AO-9		AO		A1	7	0									
37462A-AO-10		AO		A1	7	1									
37462A-AO-11		AO		A1	7	2									
37462A-AO-12		AO		A1	7	3									
37462A-AO-13		AO		A1	7	4									
37462A-AO-14		AO		A1	7	5									
37462A-AO-15		AO		A1	7	6									
37462A-AO-16		AO		A1	7	7									
1756-IB16D DC (10-30V) ISOLATED INPUT MODULE															
37462A-DI-1	37462_D120_ON_IND	DI	37462 - D120 INSTRUMENT BUS POWER ON INDICATION	A1	8	0	TB6 +D120	N/A	I-093	TB6 +D120	TB3 D1R	I-093	10 -30 VDC	PWR ON/ PWR OFF	-
37462A-DI-2	37462_D121_ON_IND	DI	37462 - D121 INSTRUMENT BUS POWER ON INDICATION	A1	8	1	TB7 +D121	N/A	I-093	TB7 +D121	TB3 D1R	I-093	10 -30 VDC	PWR ON/ PWR OFF	-
37462A-DI-3		DI		A1	8	2									
37462A-DI-4		DI		A1	8	3									
37462A-DI-5		DI		A1	8	4									
37462A-DI-6		DI		A1	8	5									
37462A-DI-7	GN2_SUP_MOV701A_PRI_OPN_IND	DI	GN2 SUPPLY VALVE MOV-701A PRIMARY OPEN INDICATION	A1	8	6	MOV-701A	37462-J61	I-099	TB8 +D230D	TB3 D1R	I-094	10 -30 VDC	OPENED/ NOT OPENED	-
37462A-DI-8	GN2_SUP_MOV701A_PRI_CLS_IND	DI	GN2 SUPPLY VALVE MOV-701A PRIMARY CLOSED INDICATION	A1	8	7	MOV-701A	37462-J61	I-099	TB8 +D230D	TB3 D1R	I-094	10 -30 VDC	CLOSED/NOT CLOSED	-
37462A-DI-9	GN2_SUP_MOV701B_PRI_OPN_IND	DI	GN2 SUPPLY VALVE MOV-701B PRIMARY OPEN INDICATION	A1	8	8	MOV-701B	37462-J62	I-099	TB6 +D130C	TB3 D1R	I-094	10 -30 VDC	OPENED/ NOT OPENED	-
37462A-DI-10	GN2_SUP_MOV701B_PRI_CLS_IND	DI	GN2 SUPPLY VALVE MOV-701B PRIMARY CLOSED INDICATION	A1	8	9	MOV-701B	37462-J62	I-099	TB6 +D130C	TB3 D1R	I-094	10 -30 VDC	CLOSED/NOT CLOSED	-
37462A-DI-11		DI		A1	8	10									
37462A-DI-12		DI		A1	8	11									
37462A-DI-13		DI		A1	8	12									
37462A-DI-14		DI		A1	8	13									
37462A-DI-15	ICPS_BLD_MOV019_PRI_OPN_IND	DI	ICPS BLEED VALVE MOV-019 PRIMARY OPENED INDICATION	A1	8	14	MOV-019	37462 - J13	I-099	TB6 +D130E	TB3 D1R	I-094	10 -30 VDC	OPENED/ NOT OPENED	-
37462A-DI-16	ICPS_BLD_MOV019_PRI_CLS_IND	DI	ICPS BLEED VALVE MOV-019 PRIMARY CLOSED INDICATION	A1	8	15	MOV-019	37462 - J13	I-099	TB6 +D130E	TB3 D1R	I-094	10 -30 VDC	CLOSED/NOT CLOSED	-
1756-IB16D DC (10-30V) ISOLATED INPUT MODULE															
† 37462A-DI-17	SPARE4_ISO_VLV300A_OPN_IND	DI	SPARE DUCT 4 ISOLATION VALVE MOV-300A OPENED INDICATION	A1	9	0	MOV-300A	37462 - J43	I-100	TB6 +D130H	TB3 D1R	I-094	10 -30 VDC	OPENED/ NOT OPENED	-
† 37462A-DI-18	SPARE4_ISO_VLV300A_CLS_IND	DI	SPARE DUCT 4 ISOLATION VALVE MOV-300A CLOSED INDICATION	A1	9	1	MOV-300A	37462 - J43	I-100	TB6 +D130H	TB3 D1R	I-094	10 -30 VDC	CLOSED/NOT CLOSED	-
† 37462A-DI-19	SPARE1_ISO_VLV240A_OPN_IND	DI	SPARE DUCT 1 ISOLATION VALVE MOV-240A OPENED INDICATION	A1	9	2	MOV-240A	37462 - J44	I-100	TB6 +D130G	TB3 D1R	I-094	10 -30 VDC	OPENED/ NOT OPENED	-
† 37462A-DI-20	SPARE1_ISO_VLV240A_CLS_IND	DI	SPARE DUCT 1 ISOLATION VALVE MOV-240A CLOSED INDICATION	A1	9	3	MOV-240A	37462 - J44	I-100	TB6 +D130G	TB3 D1R	I-094	10 -30 VDC	CLOSED/NOT CLOSED	-
37462A-DI-21	NB_ISO_MOV020_PRI_OPN_IND	DI	NORTH BLOWER ISOLATION VALVE MOV-020 PRIMARY OPENED INDICATION	A1	9	4	MOV-020	37462 - J14	I-099	TB6 +D130F	TB3 D1R	I-094	10 -30 VDC	OPENED/ NOT OPENED	-
37462A-DI-22	NB_ISO_MOV020_PRI_CLS_IND	DI	NORTH BLOWER ISOLATION VALVE MOV-020 PRIMARY CLOSED INDICATION	A1	9	5	MOV-020	37462 - J14	I-099	TB6 +D130F	TB3 D1R	I-094	10 -30 VDC	CLOSED/NOT CLOSED	-
37462A-DI-23	NS_ISO_MOV021_PRI_OPN_IND	DI	NORTH/SOUTH ISOLATION VALVE MOV-021 PRIMARY OPENED INDICATION	A1	9	6	MOV-021	37462 - J15	I-099	TB6 +D130G	TB3 D1R	I-094	10 -30 VDC	OPENED/ NOT OPENED	-
37462A-DI-24	NS_ISO_MOV021_PRI_CLS_IND	DI	NORTH/SOUTH ISOLATION VALVE MOV-021 PRIMARY CLOSED INDICATION	A1	9	7	MOV-021	37462 - J15	I-099	TB6 +D130G	TB3 D1R	I-094	10 -30 VDC	CLOSED/NOT CLOSED	-
37462A-DI-25	NB_BLD_MOV022_PRI_OPN_IND	DI	NORTH BLOWER BLEED VALVE MOV-022 PRIMARY OPENED INDICATION	A1	9	8	MOV-022	37462 - J16	I-099	TB6 +D130H	TB3 D1R	I-094	10 -30 VDC	OPENED/ NOT OPENED	-
37462A-DI-26	NB_BLD_MOV022_PRI_CLS_IND	DI	NORTH BLOWER BLEED VALVE MOV-022 PRIMARY CLOSED INDICATION	A1	9	9	MOV-022	37462 - J16	I-099	TB6 +D130H	TB3 D1R	I-094	10 -30 VDC	CLOSED/NOT CLOSED	-
37462A-DI-27	NS_BLD_MOV023_PRI_OPN_IND	DI	NORTH/SOUTH BLEED VALVE MOV-023 PRIMARY OPENED INDICATION	A1	9	10	MOV-023	37462 - J17	I-099	TB6 +D130A	TB3 D1R	I-094	10 -30 VDC	OPENED/ NOT OPENED	-
37462A-DI-28	NS_BLD_MOV023_PRI_CLS_IND	DI	NORTH/SOUTH BLEED VALVE MOV-023 PRIMARY CLOSED INDICATION	A1	9	11	MOV-023	37462 - J17	I-099	TB6 +D130A	TB3 D1R	I-094	10 -30 VDC	CLOSED/NOT CLOSED	-
37462A-DI-29	ICPS_SUP_MOV017_PRI_OPN_IND	DI	ICPS SUPPLY VALVE MOV-017 PRIMARY OPENED INDICATION	A1	9	12	MOV-017	37462 - J18	I-099	TB6 +D130B	TB3 D1R	I-094	10 -30 VDC	OPENED/ NOT OPENED	-
37462A-DI-30	ICPS_SUP_MOV017_PRI_CLS_IND	DI	ICPS SUPPLY VALVE MOV-017 PRIMARY CLOSED INDICATION	A1	9	13	MOV-017	37462 - J18	I-099	TB6 +D130B	TB3 D1R	I-094	10 -30 VDC	CLOSED/NOT CLOSED	-
37462A-DI-31	ICPS_DIS_MOV018_PRI_OPN_IND	DI	ICPS DISCHARGE VALVE MOV-018 PRIMARY OPENED INDICATION	A1	9	14	MOV-018	37462 - J19	I-099	TB6 +D130C	TB3 D1R	I-094	10 -30 VDC	OPENED/ NOT OPENED	-
37462A-DI-32	ICPS_DIS_MOV018_PRI_CLS_IND	DI	ICPS DISCHARGE VALVE MOV-018 PRIMARY CLOSED INDICATION	A1	9	15	MOV-018	37462 - J19	I-099	TB6 +D130C	TB3 D1R	I-094	10 -30 VDC	CLOSED/NOT CLOSED	-

NOTES:

1. ALL CELLS MARKED TBD SHALL BE DETERMINED BY THE CONTRACTOR AFTER FINAL EQUIPMENT SELECTION.
2. ALL BLANK ROWS ARE SPARE I/O POINTS.
3. REFERENCE SHEET I-066 FOR ENCLOSURE 37462 CONTROLS ONE-LINES.
4. THE CONTRACTOR SHALL MODIFY THE EXISTING KGCS SOFTWARE AND PLC CONFIGURATION FOR USE IN THE CONTRACTOR PROVIDED REDUNDANT PLC SYSTEM IN ACCORDANCE WITH THE TAG INDEX TABLE ON THIS SHEET AND THE SEQUENCE OF OPERATIONS ON SHEETS I-102 THROUGH I-104.
5. CHANNEL ASSIGNMENTS FOR SPARE DUCTS ARE FOR INSTALL OPTION. THESE CHANNELS ARE DENOTED BY "†" SYMBOL.

SYM	ZONE	DESCRIPTION	DATE	APPROVED
REVISIONS				

JACOBS
Jacobs Technology Inc.

SIGNATURES		DATE
DRAWN	M. HENNIGH	3/07/14
CHECKED	J. WHITEFORD	3/07/14
SUBMITTED	S. RITTER	3/07/14
ST OF LICENSURE: TN LICENSE NO: 00110556		
APPROVED	G. WARD	3/07/14
	S. HUNT	3/07/14

NATIONAL AERONAUTICS AND SPACE ADMINISTRATION
JOHN F. KENNEDY SPACE CENTER, NASA
KENNEDY SPACE CENTER, FLORIDA

KSC LAUNCH PAD 39-B
ENVIRONMENTAL CONTROL SYSTEM (ECS) REFURBISHMENT
INSTRUMENTATION
ECS LP SYSTEM A1/B1 CHASSIS 37462
TAG INDEX SHEET 1

FILE NO.	SIZE F	DWG.NO.	REV
		79K39602	
PCN. NO. 98898		SHEET 145 OF 187	

I-062

ECS RIO CABINET 37462 SYSTEM A1 (CONTINUED FROM SHEET I-062)

IDENT	TAG NAME	I/O TYPE	DESCRIPTION	RACK	SLOT	CH	DEVICE TAG	ENCLOSURE INTERFACE CONNECTOR	DEVICE REFERENCE SCHEMATIC	POWER SOURCE/BUS	POWER RETURN/ NEUTRAL	POWER REFERENCE SCHEMATIC	SIGNAL TYPE	SENSOR RANGE	UNITS
1756-OX8I AC(10-265V) / DC(5-150V) ISOLATED RELAY MODULE															
37462A-DO-1	NB_ISO_MOV020_PRI_OPN_CMD	DO	NORTH BLOWER ISOLATION VALVE MOV-020 PRIMARY OPEN COMMAND	A1	10	0	MOV-020	37462 - J14	I-099	N/A	N/A	-	1 N.O.	OPEN/ DON'T OPEN	-
37462A-DO-2	NB_ISO_MOV020_PRI_CLS_CMD	DO	NORTH BLOWER ISOLATION VALVE MOV-020 PRIMARY CLOSE COMMAND	A1	10	1	MOV-020	37462 - J14	I-099	N/A	N/A	-	1 N.O.	CLOSE/ DON'T CLOSE	-
37462A-DO-3	NS_ISO_MOV021_PRI_OPN_CMD	DO	NORTH/SOUTH ISOLATION VALVE MOV-021 PRIMARY OPEN COMMAND	A1	10	2	MOV-021	37462 - J15	I-099	N/A	N/A	-	1 N.O.	OPEN/ DON'T OPEN	-
37462A-DO-4	NS_ISO_MOV021_PRI_CLS_CMD	DO	NORTH/SOUTH ISOLATION VALVE MOV-021 PRIMARY CLOSE COMMAND	A1	10	3	MOV-021	37462 - J15	I-099	N/A	N/A	-	1 N.O.	CLOSE/ DON'T CLOSE	-
37462A-DO-5		DO		A1	10	4									
37462A-DO-6		DO		A1	10	5									
37462A-DO-7	NB_BLD_MOV022_PRI_OPN_CMD	DO	NORTH BLOWER BLEED VALVE MOV-022 PRIMARY OPEN COMMAND	A1	10	6	MOV-022	37462 - J16	I-099	N/A	N/A	-	1 N.O.	OPEN/ DON'T OPEN	-
37462A-DO-8	NB_BLD_MOV022_PRI_CLS_CMD	DO	NORTH BLOWER BLEED VALVE MOV-022 PRIMARY CLOSE COMMAND	A1	10	7	MOV-022	37462 - J16	I-099	N/A	N/A	-	1 N.O.	CLOSE/ DON'T CLOSE	-
1756-OX8I AC(10-265V) / DC(5-150V) ISOLATED RELAY MODULE															
37462A-DO-9	NS_BLD_MOV023_PRI_OPN_CMD	DO	NORTH/SOUTH BLEED VALVE MOV-023 PRIMARY OPEN COMMAND	A1	11	0	MOV-023	37462 - J17	I-099	N/A	N/A	-	1 N.O.	OPEN/ DON'T OPEN	-
37462A-DO-10	NS_BLD_MOV023_PRI_CLS_CMD	DO	NORTH/SOUTH BLEED VALVE MOV-023 PRIMARY CLOSE COMMAND	A1	11	1	MOV-023	37462 - J17	I-099	N/A	N/A	-	1 N.O.	CLOSE/ DON'T CLOSE	-
† 37462A-DO-11	SPARE4_ISO_VLV300A_OPN_CMD	DO	SPARE DUCT 4 ISOLATION VALVE MOV-300A OPEN COMMAND	A1	11	2	MOV-300A	37462 - J43	I-100	N/A	N/A	-	1 N.O.	OPEN/ DON'T OPEN	-
† 37462A-DO-12	SPARE4_ISO_VLV300A_CLS_CMD	DO	SPARE DUCT 4 ISOLATION VALVE MOV-300A CLOSE COMMAND	A1	11	3	MOV-300A	37462 - J43	I-100	N/A	N/A	-	1 N.O.	CLOSE/DON'T CLOSE	-
† 37462A-DO-13	SPARE1_ISO_VLV240A_OPN_CMD	DO	SPARE DUCT 1 ISOLATION VALVE MOV-240A OPEN COMMAND	A1	11	4	MOV-240A	37462 - J44	I-100	N/A	N/A	-	1 N.O.	OPEN/ DON'T OPEN	-
† 37462A-DO-14	SPARE1_ISO_VLV240A_CLS_CMD	DO	SPARE DUCT 1 ISOLATION VALVE MOV-240A CLOSE COMMAND	A1	11	5	MOV-240A	37462 - J44	I-100	N/A	N/A	-	1 N.O.	CLOSE/DON'T CLOSE	-
37462A-DO-15		DO		A1	11	6									
37462A-DO-16		DO		A1	11	7									
1756-OX8I AC(10-265V) / DC(5-150V) ISOLATED RELAY MODULE															
37462A-DO-17		DO		A1	12	0									
37462A-DO-18		DO		A1	12	1									
37462A-DO-19	ICPS_SUP_MOV017_PRI_OPN_CMD	DO	ICPS SUPPLY VALVE MOV-017 PRIMARY OPEN COMMAND	A1	12	2	MOV-017	37462 - J18	I-099	N/A	N/A	-	1 N.O.	OPEN/ DON'T OPEN	-
37462A-DO-20	ICPS_SUP_MOV017_PRI_CLS_CMD	DO	ICPS SUPPLY VALVE MOV-017 PRIMARY CLOSE COMMAND	A1	12	3	MOV-017	37462 - J18	I-099	N/A	N/A	-	1 N.O.	CLOSE/ DON'T CLOSE	-
37462A-DO-21	ICPS_DIS_MOV018_PRI_OPN_CMD	DO	ICPS DISCHARGE VALVE MOV-018 PRIMARY OPEN COMMAND	A1	12	4	MOV-018	37462 - J19	I-099	N/A	N/A	-	1 N.O.	OPEN/ DON'T OPEN	-
37462A-DO-22	ICPS_DIS_MOV018_PRI_CLS_CMD	DO	ICPS DISCHARGE VALVE MOV-018 PRIMARY CLOSE COMMAND	A1	12	5	MOV-018	37462 - J19	I-099	N/A	N/A	-	1 N.O.	CLOSE/ DON'T CLOSE	-
37462A-DO-23	ICPS_BLD_MOV019_PRI_OPN_CMD	DO	ICPS BLEED VALVE MOV-019 PRIMARY OPEN COMMAND	A1	12	6	MOV-019	37462 - J13	I-099	N/A	N/A	-	1 N.O.	OPEN/ DON'T OPEN	-
37462A-DO-24	ICPS_BLD_MOV019_PRI_CLS_CMD	DO	ICPS BLEED VALVE MOV-019 PRIMARY CLOSE COMMAND	A1	12	7	MOV-019	37462 - J13	I-099	N/A	N/A	-	1 N.O.	CLOSE/ DON'T CLOSE	-
1756-OB8EI DC (10-30V) ELECTRONICALLY FUSED ISOLATED OUTPUT MODULE															
37462A-DO-25	37462_D120_ON_CMD	DO	37462 - D120 INSTRUMENT BUS POWER ON COMMAND	A1	13	0	K1	N/A	I-093	TB1 +D110	TB3 D1R	I-093	10 - 30 VDC	PWR ON/ PWR OFF	-
37462A-DO-26	37462_D121_ON_CMD	DO	37462 - D121 COMMAND BUS POWER ON COMMAND	A1	13	1	K2	N/A	I-093	TB1 +D110	TB3 D1R	I-093	10 - 30 VDC	PWR ON/ PWR OFF	-
37462A-DO-27		DO		A1	13	2									
37462A-DO-28		DO		A1	13	3									
37462A-DO-29		DO		A1	13	4									
37462A-DO-30		DO		A1	13	5									
37462A-DO-31		DO		A1	13	6									
37462A-DO-32		DO		A1	13	7									
1756-OB8EI DC (10-30V) ELECTRONICALLY FUSED ISOLATED OUTPUT MODULE															
37462A-DO-33	37462_D130A_ON_CMD	DO	37462 - D130A INSTRUMENT BUS POWER ON COMMAND	A1	14	0	TB6 +D130A	N/A	I-094	TB6 +D120	TB3 D1R	I-094	10 - 30 VDC	PWR ON/ PWR OFF	-
37462A-DO-34	37462_D130B_ON_CMD	DO	37462 - D130B INSTRUMENT BUS POWER ON COMMAND	A1	14	1	TB6 +D130B	N/A	I-094	TB6 +D120	TB3 D1R	I-094	10 - 30 VDC	PWR ON/ PWR OFF	-
37462A-DO-35	37462_D130C_ON_CMD	DO	37462 - D130C INSTRUMENT BUS POWER ON COMMAND	A1	14	2	TB6 +D130C	N/A	I-094	TB6 +D120	TB3 D1R	I-094	10 - 30 VDC	PWR ON/ PWR OFF	-
37462A-DO-36	37462_D130D_ON_CMD	DO	37462 - D130D INSTRUMENT BUS POWER ON COMMAND	A1	14	3	TB6 +D130D	N/A	I-094	TB6 +D120	TB3 D1R	I-094	10 - 30 VDC	PWR ON/ PWR OFF	-
37462A-DO-37	37462_D130E_ON_CMD	DO	37462 - D130E INSTRUMENT BUS POWER ON COMMAND	A1	14	4	TB6 +D130E	N/A	I-094	TB6 +D120	TB3 D1R	I-094	10 - 30 VDC	PWR ON/ PWR OFF	-
37462A-DO-38	37462_D130F_ON_CMD	DO	37462 - D130F INSTRUMENT BUS POWER ON COMMAND	A1	14	5	TB6 +D130F	N/A	I-094	TB6 +D120	TB3 D1R	I-094	10 - 30 VDC	PWR ON/ PWR OFF	-
37462A-DO-39	37462_D130G_ON_CMD	DO	37462 - D130G INSTRUMENT BUS POWER ON COMMAND	A1	14	6	TB6 +D130G	N/A	I-094	TB6 +D120	TB3 D1R	I-094	10 - 30 VDC	PWR ON/ PWR OFF	-
37462A-DO-40	37462_D130H_ON_CMD	DO	37462 - D130H INSTRUMENT BUS POWER ON COMMAND	A1	14	7	TB6 +D130H	N/A	I-094	TB6 +D120	TB3 D1R	I-094	10 - 30 VDC	PWR ON/ PWR OFF	-
1756-OB8EI DC (10-30V) ELECTRONICALLY FUSED ISOLATED OUTPUT MODULE															
37462A-DO-41	37462_D131A_ON_CMD	DO	37462 - D131A COMMAND BUS POWER ON COMMAND	A1	15	0	TB7 +D131A	N/A	I-094	TB7 +D121	TB3 D1R	I-094	10 - 30 VDC	PWR ON/ PWR OFF	-
37462A-DO-42	37462_D131B_ON_CMD	DO	37462 - D131B COMMAND BUS POWER ON COMMAND	A1	15	1	TB7 +D131B	N/A	I-094	TB7 +D121	TB3 D1R	I-094	10 - 30 VDC	PWR ON/ PWR OFF	-
37462A-DO-43	37462_D131C_ON_CMD	DO	37462 - D131C COMMAND BUS POWER ON COMMAND	A1	15	2	TB7 +D131C	N/A	I-094	TB7 +D121	TB3 D1R	I-094	10 - 30 VDC	PWR ON/ PWR OFF	-
37462A-DO-44	37462_D131D_ON_CMD	DO	37462 - D131D COMMAND BUS POWER ON COMMAND	A1	15	3	TB7 +D131D	N/A	I-094	TB7 +D121	TB3 D1R	I-094	10 - 30 VDC	PWR ON/ PWR OFF	-
37462A-DO-45	37462_D131E_ON_CMD	DO	37462 - D131E COMMAND BUS POWER ON COMMAND	A1	15	4	TB7 +D131E	N/A	I-094	TB7 +D121	TB3 D1R	I-094	10 - 30 VDC	PWR ON/ PWR OFF	-
37462A-DO-46	37462_D131F_ON_CMD	DO	37462 - D131F COMMAND BUS POWER ON COMMAND	A1	15	5	TB7 +D131F	N/A	I-094	TB7 +D121	TB3 D1R	I-094	10 - 30 VDC	PWR ON/ PWR OFF	-
37462A-DO-47	37462_D131G_ON_CMD	DO	37462 - D131G COMMAND BUS POWER ON COMMAND	A1	15	6	TB7 +D131G	N/A	I-094	TB7 +D121	TB3 D1R	I-094	10 - 30 VDC	PWR ON/ PWR OFF	-
37462A-DO-48	37462_D131H_ON_CMD	DO	37462 - D131H COMMAND BUS POWER ON COMMAND	A1	15	7	TB7 +D131H	N/A	I-094	TB7 +D121	TB3 D1R	I-094	10 - 30 VDC	PWR ON/ PWR OFF	-
1756-OX8I AC(10-265V) / DC(5-150V) ISOLATED RELAY MODULE															
37462A-DO-49	GN2_SUP_MOV701A_PRI_OPN_CMD	DO	GN2 SUPPLY VALVE MOV-701A PRIMARY OPEN COMMAND	A1	16	0	MOV-701A	37462-J61	I-099	N/A	N/A	-	1 N.O.	OPEN/ DON'T OPEN	-
37462A-DO-50	GN2_SUP_MOV701A_PRI_CLS_CMD	DO	GN2 SUPPLY VALVE MOV-701A PRIMARY CLOSE COMMAND	A1	16	1	MOV-701A	37462-J61	I-099	N/A	N/A	-	1 N.O.	CLOSE/ DON'T CLOSE	-
37462A-DO-51	GN2_SUP_MOV701B_PRI_OPN_CMD	DO	GN2 SUPPLY VALVE MOV-701B PRIMARY OPEN COMMAND	A1	16	2	MOV-701B	37462-J62	I-099	N/A	N/A	-	1 N.O.	OPEN/ DON'T OPEN	-
37462A-DO-52	GN2_SUP_MOV701B_PRI_CLS_CMD	DO	GN2 SUPPLY VALVE MOV-701B PRIMARY CLOSE COMMAND	A1	16	3	MOV-701B	37462-J62	I-099	N/A	N/A	-	1 N.O.	CLOSE/ DON'T CLOSE	-
37462A-DO-53		DO		A1	16	4									
37462A-DO-54		DO		A1	16	5									
37462A-DO-55		DO		A1	16	6									
37462A-DO-56		DO		A1	16	7									

NOTES:

1. ALL CELLS MARKED TBD SHALL BE DETERMINED BY THE CONTRACTOR AFTER FINAL EQUIPMENT SELECTION.
2. ALL BLANK ROWS ARE SPARE I/O POINTS.
3. REFERENCE SHEET I-066 FOR ENCLOSURE 37462 CONTROLS ONE-LINES.
4. THE CONTRACTOR SHALL MODIFY THE EXISTING KGCS SOFTWARE AND PLC CONFIGURATION FOR USE IN THE CONTRACTOR PROVIDED REDUNDANT PLC SYSTEM IN ACCORDANCE WITH THE TAG INDEX TABLE ON THIS SHEET AND THE SEQUENCE OF OPERATIONS ON SHEETS I-102 THROUGH I-104.
5. CHANNEL ASSIGNMENTS FOR SPARE DUCTS ARE FOR INSTALL OPTION. THESE CHANNELS ARE DENOTED BY "†" SYMBOL.

SYM	ZONE	DESCRIPTION	DATE	APPROVED
REVISIONS				

JACOBS
Jacobs Technology Inc.

SIGNATURES		DATE
DRAWN	M. HENNIGH	3/07/14
CHECKED	J. WHITEFORD	3/07/14
SUBMITTED	S. RITTER	3/07/14
ST OF LICENSURE: TN LICENSE NO: 00110556		
APPROVED	G. WARD	3/07/14
	S. HUNT	3/07/14

NATIONAL AERONAUTICS AND SPACE ADMINISTRATION
JOHN F. KENNEDY SPACE CENTER, NASA
KENNEDY SPACE CENTER, FLORIDA

KSC LAUNCH PAD 39-B
ENVIRONMENTAL CONTROL SYSTEM (ECS) REFURBISHMENT
INSTRUMENTATION
ECS LP SYSTEM A1/B1 CHASSIS 37462
TAG INDEX SHEET 2

FILE NO.	SIZE	DWG.NO.	REV
	F	79K39602	
PCN. NO. 98898		SHEET 146 OF 187	

I-063

ECS RIO CABINET 37462 SYSTEM B1

IDENT	TAG NAME	I/O TYPE	DESCRIPTION	RACK	SLOT	CH	DEVICE TAG	ENCLOSURE INTERFACE CONNECTOR	DEVICE REFERENCE SCHEMATIC	POWER SOURCE/BUS	POWER RETURN/ NEUTRAL	POWER REFERENCE SCHEMATIC	SIGNAL TYPE	SENSOR RANGE	UNITS
1756-IF6I ISOLATED ANALOG VOLTAGE/CURRENT INPUT MODULE															
37462B-AI-1	37462_GSP_SYSB_SUP_V	AI	37462 GSP BUS B VDC (SUPPLY VOLTAGE = SIGNAL x 4)	B1	2	0	R4	N/A	I-093	N/A	TB3 D1R	I-093	0 – 10 VDC	0 – 10	VDC
37462B-AI-2		AI		B1	2	1									
37462B-AI-3		AI		B1	2	2									
37462B-AI-4		AI		B1	2	3									
† 37462B-AI-5	SPARE1_DPT247B_SEC_SIG	AI	SPARE DUCT 1 SECONDARY FLOW DIFFERENTIAL PRESSURE SIGNAL	B1	2	4	DPT-247B	37462 – J47	I-097	TB8 +D230E	TB3 D1R	I-094	0 – 5 VDC	TBD	PSID
† 37462B-AI-6	SPARE1_PT248B_SEC_SIG	AI	SPARE DUCT 1 SECONDARY STATIC PRESSURE SIGNAL	B1	2	5	PT-248B	37462 – J48	I-097	TB8 +D230E	TB3 D1R	I-094	0 – 5 VDC	TBD	PSIA
1756-IF6I ISOLATED ANALOG VOLTAGE/CURRENT INPUT MODULE															
37462B-AI-7	NB_DMP_PCV_010B_PER_OPN_IND	AI	NORTH BLOWER DUMP VALVE PCV-010B PERCENT OPEN INDICATION	B1	3	0	PCV-010B	37462 – J26	I-079	TB8 +D230A	TB3 D1R	I-094	4 – 20mA	0 – 100	% OPEN
37462B-AI-8	SB_DMP_PCV_014B_PER_OPN_IND	AI	SOUTH BLOWER DUMP VALVE PCV-014B PERCENT OPEN INDICATION	B1	3	1	PCV-014B	37462 – J27	I-079	TB8 +D230B	TB3 D1R	I-094	4 – 20mA	0 – 100	% OPEN
37462B-AI-9	ICPS_DMP_PCV_015B_PER_OPN_IND	AI	ICPS BLOWER DUMP VALVE PCV-015B PERCENT OPEN INDICATION	B1	3	2	PCV-015B	37462 – J28	I-079	TB8 +D230C	TB3 D1R	I-094	4 – 20mA	0 – 100	% OPEN
37462B-AI-10	N_CC_TCV_517_SEC_PER_OPN_IND	AI	NORTH COOLING CHAMBER VALVE TCV-517 SECONDARY PERCENT OPEN INDICATION	B1	3	3	TCV-517	37462 – J20	I-088	TB6 +D130D	TB3 D1R	I-094	4 – 20mA	0 – 100	% OPEN
37462B-AI-11	S_CC_TCV_518_SEC_PER_OPN_IND	AI	SOUTH COOLING CHAMBER VALVE TCV-518 SECONDARY PERCENT OPEN INDICATION	B1	3	4	TCV-518	37462 – J21	I-088	TB6 +D130E	TB3 D1R	I-094	4 – 20mA	0 – 100	% OPEN
37462B-AI-12	ICPS_CC_TCV_519_SECI_PER_OPN_IND	AI	ICPS COOLING CHAMBER VALVE TCV-519 SECONDARY PERCENT OPEN INDICATION	B1	3	5	TCV-519	37462 – J22	I-088	TB6 +D130F	TB3 D1R	I-094	4 – 20mA	0 – 100	% OPEN
1756-IF6I ISOLATED ANALOG VOLTAGE/CURRENT INPUT MODULE															
37462B-AI-13	EC_CC_DPT267B_SEC_SIG	AI	DUCT EC/CC SECONDARY FLOW DIFFERENTIAL PRESSURE SIGNAL	B1	4	0	DPT-267B	37462 – J30	I-097	TB8 +D230G	TB3 D1R	I-094	0 – 5 VDC	TBD	PSID
37462B-AI-14	CS_ENG_DPT277B_SEC_SIG	AI	DUCT CS/ENG SECONDARY FLOW DIFFERENTIAL PRESSURE SIGNAL	B1	4	1	DPT-277B	37462 – J32	I-097	TB8 +D230H	TB3 D1R	I-094	0 – 5 VDC	TBD	PSID
† 37462B-AI-15	SPARE2_DPT287B_SEC_SIG	AI	SPARE DUCT 2 SECONDARY FLOW DIFFERENTIAL PRESSURE SIGNAL	B1	4	2	DPT-287B	37462 – J55	I-097	TB8 +D230F	TB3 D1R	I-094	0 – 5 VDC	TBD	PSID
† 37462B-AI-16	SPARE3_DPT297B_SEC_SIG	AI	SPARE DUCT 3 SECONDARY FLOW DIFFERENTIAL PRESSURE SIGNAL	B1	4	3	DPT-297B	37462 – J56	I-097	TB8 +D230G	TB3 D1R	I-094	0 – 5 VDC	TBD	PSID
37462B-AI-17	ICPS_DPT307B_SEC_SIG	AI	DUCT ICPS SECONDARY FLOW DIFFERENTIAL PRESSURE SIGNAL	B1	4	4	DPT-307B	37462 – J34	I-097	TB8 +D230A	TB3 D1R	I-094	0 – 5 VDC	TBD	PSID
† 37462B-AI-18	SPARE4_DPT317B_SEC_SIG	AI	SPARE DUCT 4 SECONDARY FLOW DIFFERENTIAL PRESSURE SIGNAL	B1	4	5	DPT-317B	37462 – J57	I-097	TB8 +D230H	TB3 D1R	I-094	0 – 5 VDC	TBD	PSID
1756-IF6I ISOLATED ANALOG VOLTAGE/CURRENT INPUT MODULE															
37462B-AI-19	EC_CC_PT268B_SEC_SIG	AI	DUCT EC/CC SECONDARY STATIC PRESSURE SIGNAL	B1	5	0	PT-268B	37462 – J36	I-097	TB8 +D230B	TB3 D1R	I-094	0 – 5 VDC	TBD	PSIA
37462B-AI-20	CS_ENG_PT278B_SEC_SIG	AI	DUCT CS/ENG SECONDARY STATIC PRESSURE SIGNAL	B1	5	1	PT-278B	37462 – J38	I-097	TB8 +D230C	TB3 D1R	I-094	0 – 5 VDC	TBD	PSIA
† 37462B-AI-21	SPARE2_PT288B_SEC_SIG	AI	SPARE DUCT 2 SECONDARY STATIC PRESSURE SIGNAL	B1	5	2	PT-288B	37462 – J58	I-097	TB8 +D230F	TB3 D1R	I-094	0 – 5 VDC	TBD	PSIA
† 37462B-AI-22	SPARE3_PT298B_SEC_SIG	AI	SPARE DUCT 3 SECONDARY STATIC PRESSURE SIGNAL	B1	5	3	PT-298B	37462 – J59	I-097	TB8 +D230G	TB3 D1R	I-094	0 – 5 VDC	TBD	PSIA
37462B-AI-23	ICPS_PT308B_SEC_SIG	AI	DUCT ICPS SECONDARY STATIC PRESSURE SIGNAL	B1	5	4	PT-308B	37462 – J40	I-097	TB8 +D230D	TB3 D1R	I-094	0 – 5 VDC	TBD	PSIA
† 37462B-AI-24	SPARE4_PT318B_SEC_SIG	AI	SPARE DUCT 4 SECONDARY STATIC PRESSURE SIGNAL	B1	5	5	PT-318B	37462 – J60	I-097	TB8 +D230H	TB3 D1R	I-094	0 – 5 VDC	TBD	PSIA
1756-OF8 VOLTAGE/CURRENT ANALOG OUTPUT MODULE															
37462B-AO-1	NB_DMP_PCV_010B_OUT_ADJ	AO	NORTH BLOWER DUMP VALVE PCV-010B OUTPUT ADJUSTMENT	B1	6	0	PCV-010B	37462 – J26	I-079	I/O CHAN	I/O CHAN	–	4 – 20mA	0 – 100	% OPEN
37462B-AO-2	SB_DMP_PCV_014B_OUT_ADJ	AO	SOUTH BLOWER DUMP VALVE PCV-014B OUTPUT ADJUSTMENT	B1	6	1	PCV-014B	37462 – J27	I-079	I/O CHAN	I/O CHAN	–	4 – 20mA	0 – 100	% OPEN
37462B-AO-3	ICPS_DMP_PCV_015B_OUT_ADJ	AO	ICPS BLOWER DUMP VALVE PCV-015B OUTPUT ADJUSTMENT	B1	6	2	PCV-015B	37462 – J28	I-079	I/O CHAN	I/O CHAN	–	4 – 20mA	0 – 100	% OPEN
37462B-AO-4	N_CC_TCV_517_SEC_OUT_ADJ	AO	NORTH COOLING CHAMBER VALVE TCV-517 SECONDARY OUTPUT ADJUSTMENT	B1	6	3	TCV-517	37462 – J20	I-088	I/O CHAN	I/O CHAN	–	4 – 20mA	0 – 100	% OPEN
37462B-AO-5	S_CC_TCV_518_SEC_OUT_ADJ	AO	SOUTH COOLING CHAMBER VALVE TCV-518 SECONDARY OUTPUT ADJUSTMENT	B1	6	4	TCV-518	37462 – J21	I-088	I/O CHAN	I/O CHAN	–	4 – 20mA	0 – 100	% OPEN
37462B-AO-6	ICPS_CC_TCV_519_SEC_OUT_ADJ	AO	ICPS COOLING CHAMBER VALVE TCV-519 SECONDARY OUTPUT ADJUSTMENT	B1	6	5	TCV-519	37462 – J22	I-088	I/O CHAN	I/O CHAN	–	4 – 20mA	0 – 100	% OPEN
37462B-AO-7		AO		B1	6	6									
37462B-AO-8		AO		B1	6	7									
1756-OF8 VOLTAGE/CURRENT ANALOG OUTPUT MODULE															
37462B-AO-9		AO		B1	7	0									
37462B-AO-10		AO		B1	7	1									
37462B-AO-11		AO		B1	7	2									
37462B-AO-12		AO		B1	7	3									
37462B-AO-13		AO		B1	7	4									
37462B-AO-14		AO		B1	7	5									
37462B-AO-15		AO		B1	7	6									
37462B-AO-16		AO		B1	7	7									
1756-IB16D DC (10-30V) ISOLATED INPUT MODULE															
37462B-DI-1	37462_D220_ON_IND	DI	37462 – D220 INSTRUMENT BUS POWER ON INDICATION	B1	8	0	TB8 +D220	N/A	I-093	TB8 +D220	TB3 D1R	I-093	10 –30 VDC	PWR ON/ PWR OFF	–
37462B-DI-2	37462_D221_ON_IND	DI	37462 – D221 INSTRUMENT BUS POWER ON INDICATION	B1	8	1	TB9 +D221	N/A	I-093	TB9 +D221	TB3 D1R	I-093	10 –30 VDC	PWR ON/ PWR OFF	–
37462B-DI-3		DI		B1	8	2									
37462B-DI-4		DI		B1	8	3									
37462B-DI-5		DI		B1	8	4									
37462B-DI-6		DI		B1	8	5									
37462B-DI-7	GN2_SUP_MOV701A_SEC_OPN_IND	DI	GN2 SUPPLY VALVE MOV-701A SECONDARY OPEN INDICATION	B1	8	6	MOV-701A	37462-J61	I-099	TB8 +D230D	TB3 D1R	I-094	10 –30 VDC	OPENED/ NOT OPENED	–
37462B-DI-8	GN2_SUP_MOV701A_SEC_CLS_IND	DI	GN2 SUPPLY VALVE MOV-701A SECONDARY CLOSED INDICATION	B1	8	7	MOV-701A	37462-J61	I-099	TB8 +D230D	TB3 D1R	I-094	10 –30 VDC	CLOSED/NOT CLOSED	–
37462B-DI-9	GN2_SUP_MOV701B_SEC_OPN_IND	DI	GN2 SUPPLY VALVE MOV-701B SECONDARY OPEN INDICATION	B1	8	8	MOV-701B	37462-J62	I-099	TB6 +D130C	TB3 D1R	I-094	10 –30 VDC	OPENED/ NOT OPENED	–
37462B-DI-10	GN2_SUP_MOV701B_SEC_CLS_IND	DI	GN2 SUPPLY VALVE MOV-701B SECONDARY CLOSED INDICATION	B1	8	9	MOV-701B	37462-J62	I-099	TB6 +D130C	TB3 D1R	I-094	10 –30 VDC	CLOSED/NOT CLOSED	–
37462B-DI-11		DI		B1	8	10									
37462B-DI-12		DI		B1	8	11									
37462B-DI-13		DI		B1	8	12									
37462B-DI-14		DI		B1	8	13									
37462B-DI-15	ICPS_BLD_MOV019_SEC_OPN_IND	DI	ICPS BLEED VALVE MOV-019 SECONDARY OPENED INDICATION	B1	8	14	MOV-019	37462 – J13	I-099	TB6 +D130E	TB3 D1R	I-094	10 –30 VDC	OPENED/ NOT OPENED	–
37462B-DI-16	ICPS_BLD_MOV019_SEC_CLS_IND	DI	ICPS BLEED VALVE MOV-019 SECONDARY CLOSED INDICATION	B1	8	15	MOV-019	37462 – J13	I-099	TB6 +D130E	TB3 D1R	I-094	10 –30 VDC	CLOSED/NOT CLOSED	–
1756-IB16D DC (10-30V) ISOLATED INPUT MODULE															
† 37462B-DI-17	SPARE4_ISO_VLV300B_OPN_IND	DI	SPARE DUCT 4 ISOLATION VALVE MOV-300B OPENED INDICATION	B1	9	0	MOV-300B	37462 – J45	I-100	TB8 +D230F	TB3 D1R	I-094	10 –30 VDC	OPENED/ NOT OPENED	–
† 37462B-DI-18	SPARE4_ISO_VLV300B_CLS_IND	DI	SPARE DUCT 4 ISOLATION VALVE MOV-300B CLOSED INDICATION	B1	9	1	MOV-300B	37462 – J45	I-100	TB8 +D230F	TB3 D1R	I-094	10 –30 VDC	CLOSED/NOT CLOSED	–
† 37462B-DI-19	SPARE1_ISO_VLV240B_OPN_IND	DI	SPARE DUCT 1 ISOLATION VALVE MOV-240B OPENED INDICATION	B1	9	2	MOV-240B	37462 – J46	I-100	TB8 +D230E	TB3 D1R	I-094	10 –30 VDC	OPENED/ NOT OPENED	–
† 37462B-DI-20	SPARE1_ISO_VLV240B_CLS_IND	DI	SPARE DUCT 1 ISOLATION VALVE MOV-240B CLOSED INDICATION	B1	9	3	MOV-240B	37462 – J46	I-100	TB8 +D230E	TB3 D1R	I-094	10 –30 VDC	CLOSED/NOT CLOSED	–
37462B-DI-21	NB_ISO_MOV020_SEC_OPN_IND	DI	NORTH BLOWER ISOLATION VALVE MOV-020 SECONDARY OPENED INDICATION	B1	9	4	MOV-020	37462 – J14	I-099	TB6 +D130F	TB3 D1R	I-094	10 –30 VDC	OPENED/ NOT OPENED	–
37462B-DI-22	NB_ISO_MOV020_SEC_CLS_IND	DI	NORTH BLOWER ISOLATION VALVE MOV-020 SECONDARY CLOSED INDICATION	B1	9	5	MOV-020	37462 – J14	I-099	TB6 +D130F	TB3 D1R	I-094	10 –30 VDC	CLOSED/NOT CLOSED	–
37462B-DI-23	NS_ISO_MOV021_SEC_OPN_IND	DI	NORTH/SOUTH ISOLATION VALVE MOV-021 SECONDARY OPENED INDICATION	B1	9	6	MOV-021	37462 – J15	I-099	TB6 +D130G	TB3 D1R	I-094	10 –30 VDC	OPENED/ NOT OPENED	–
37462B-DI-24	NS_ISO_MOV021_SEC_CLS_IND	DI	NORTH/SOUTH ISOLATION VALVE MOV-021 SECONDARY CLOSED INDICATION	B1	9	7	MOV-021	37462 – J15	I-099	TB6 +D130G	TB3 D1R	I-094	10 –30 VDC	CLOSED/NOT CLOSED	–
37462B-DI-25	NB_BLD_MOV022_SEC_OPN_IND	DI	NORTH BLOWER BLEED VALVE MOV-022 SECONDARY OPENED INDICATION	B1	9	8	MOV-022	37462 – J16	I-099	TB6 +D130H	TB3 D1R	I-094	10 –30 VDC	OPENED/ NOT OPENED	–
37462B-DI-26	NB_BLD_MOV022_SEC_CLS_IND	DI	NORTH BLOWER BLEED VALVE MOV-022 SECONDARY CLOSED INDICATION	B1	9	9	MOV-022	37462 – J16	I-099	TB6 +D130H	TB3 D1R	I-094	10 –30 VDC	CLOSED/NOT CLOSED	–
37462B-DI-27	NS_BLD_MOV023_SEC_OPN_IND	DI	NORTH/SOUTH BLEED VALVE MOV-023 SECONDARY OPENED INDICATION	B1	9	10	MOV-023	37462 – J17	I-099	TB6 +D130A	TB3 D1R	I-094	10 –30 VDC	OPENED/ NOT OPENED	–
37462B-DI-28	NS_BLD_MOV023_SEC_CLS_IND	DI	NORTH/SOUTH BLEED VALVE MOV-023 SECONDARY CLOSED INDICATION	B1	9	11	MOV-023	37462 – J17	I-099	TB6 +D130A	TB3 D1R	I-094	10 –30 VDC	CLOSED/NOT CLOSED	–
37462B-DI-29	ICPS_SUP_MOV017_SEC_OPN_IND	DI	ICPS SUPPLY VALVE MOV-017 SECONDARY OPENED INDICATION	B1	9	12	MOV-017	37462 – J18	I-099	TB6 +D130B	TB3 D1R	I-094	10 –30 VDC	OPENED/ NOT OPENED	–
37462B-DI-30	ICPS_SUP_MOV017_SEC_CLS_IND	DI	ICPS SUPPLY VALVE MOV-017 SECONDARY CLOSED INDICATION	B1	9	13	MOV-017	37462 – J18	I-099	TB6 +D130B	TB3 D1R	I-094	10 –30 VDC	CLOSED/NOT CLOSED	–
37462B-DI-31	ICPS_DIS_MOV018_SEC_OPN_IND	DI	ICPS DISCHARGE VALVE MOV-018 SECONDARY OPENED INDICATION	B1	9	14	MOV-018	37462 – J19	I-099	TB6 +D130C	TB3 D1R	I-094	10 –30 VDC	OPENED/ NOT OPENED	–
37462B-DI-32	ICPS_DIS_MOV018_SEC_CLS_IND	DI	ICPS DISCHARGE VALVE MOV-018 SECONDARY CLOSED INDICATION	B1	9	15	MOV-018	37462 – J19	I-099	TB6 +D130C	TB3 D1R	I-094	10 –30 VDC	CLOSED/NOT CLOSED	–

NOTES:

1. ALL CELLS MARKED TBD SHALL BE DETERMINED BY THE CONTRACTOR AFTER FINAL EQUIPMENT SELECTION.
2. ALL BLANK ROWS ARE SPARE I/O POINTS.
3. REFERENCE SHEET I-066 FOR ENCLOSURE 37462 CONTROLS ONE-LINES.
4. THE CONTRACTOR SHALL MODIFY THE EXISTING KGCS SOFTWARE AND PLC CONFIGURATION FOR USE IN THE CONTRACTOR PROVIDED REDUNDANT PLC SYSTEM IN ACCORDANCE WITH THE TAG INDEX TABLE ON THIS SHEET AND THE SEQUENCE OF OPERATIONS ON SHEETS I-102 THROUGH I-104.
5. CHANNEL ASSIGNMENTS FOR SPARE DUCTS ARE FOR INSTALL OPTION. THESE CHANNELS ARE DENOTED BY "†" SYMBOL.

SYM	ZONE	DESCRIPTION	DATE	APPROVED
REVISIONS				

SIGNATURES	DATE
DRAWN M. HENNIGH	3/07/14
CHECKED J. WHITEFORD	3/07/14
SUBMITTED S. RITTER	3/07/14
ST OF LICENSURE: TN LICENSE NO: 00110556	
APPROVED G. WARD	3/07/14
S. HUNT	3/07/14

JACOBS
Jacobs Technology Inc.

NATIONAL AERONAUTICS AND SPACE ADMINISTRATION
JOHN F. KENNEDY SPACE CENTER, NASA
KENNEDY SPACE CENTER, FLORIDA

KSC LAUNCH PAD 39-B
ENVIRONMENTAL CONTROL SYSTEM (ECS) REFURBISHMENT
INSTRUMENTATION
ECS LP SYSTEM A1/B1 CHASSIS 37462
TAG INDEX SHEET 3

FILE NO.	SIZE	DWG.NO.	REV
	F	79K39602	
PCN. NO. 98898		SHEET 147 OF 187	

I-064

ECS RIO CABINET 37462 SYSTEM B1 (CONTINUED FROM SHEET I-064)

IDENT	TAG NAME	I/O TYPE	DESCRIPTION	RACK	SLOT	CH	DEVICE TAG	ENCLOSURE INTERFACE CONNECTOR	DEVICE REFERENCE SCHEMATIC	POWER SOURCE/BUS	POWER RETURN/ NEUTRAL	POWER REFERENCE SCHEMATIC	SIGNAL TYPE	SENSOR RANGE	UNITS
1756-OX8I AC(10-265V) / DC(5-150V) ISOLATED RELAY MODULE															
37462B-DO-1	NB_ISO_MOV020_SEC_OPN_CMD	DO	NORTH BLOWER ISOLATION VALVE MOV-020 SECONDARY OPEN COMMAND	B1	10	0	MOV-020	37462 - J14	I-099	N/A	N/A	-	1 N.O.	OPEN/ DON'T OPEN	-
37462B-DO-2	NB_ISO_MOV020_SEC_CLS_CMD	DO	NORTH BLOWER ISOLATION VALVE MOV-020 SECONDARY CLOSE COMMAND	B1	10	1	MOV-020	37462 - J14	I-099	N/A	N/A	-	1 N.O.	CLOSE/ DON'T CLOSE	-
37462B-DO-3	NS_ISO_MOV021_SEC_OPN_CMD	DO	NORTH/SOUTH ISOLATION VALVE MOV-021 SECONDARY OPEN COMMAND	B1	10	2	MOV-021	37462 - J15	I-099	N/A	N/A	-	1 N.O.	OPEN/ DON'T OPEN	-
37462B-DO-4	NS_ISO_MOV021_SEC_CLS_CMD	DO	NORTH/SOUTH ISOLATION VALVE MOV-021 SECONDARY CLOSE COMMAND	B1	10	3	MOV-021	37462 - J15	I-099	N/A	N/A	-	1 N.O.	CLOSE/ DON'T CLOSE	-
37462B-DO-5	N_CC_TCV_517_SEC_SEL_HI_CMD	DO	NORTH COOLING CHAMBER VALVE TCV-517 SECONDARY SELECT HIGH COMMAND	B1	10	4	TCV-517	37462 - J20	I-088	N/A	N/A	-	1 N.O. / 1 N.C. CONTACT	B1 SELECT / A1 SELECT	-
37462B-DO-6	N_CC_TCV_517_SEC_SEL_LO_CMD	DO	NORTH COOLING CHAMBER VALVE TCV-517 SECONDARY SELECT LOW COMMAND	B1	10	5	TCV-517	37462 - J20	I-088	N/A	N/A	-	1 N.O. / 1 N.C. CONTACT	B1 SELECT / A1 SELECT	-
37462B-DO-7	NB_BLD_MOV022_SEC_OPN_CMD	DO	NORTH BLOWER BLEED VALVE MOV-022 SECONDARY OPEN COMMAND	B1	10	6	MOV-022	37462 - J16	I-099	N/A	N/A	-	1 N.O.	OPEN/ DON'T OPEN	-
37462B-DO-8	NB_BLD_MOV022_SEC_CLS_CMD	DO	NORTH BLOWER BLEED VALVE MOV-022 SECONDARY CLOSE COMMAND	B1	10	7	MOV-022	37462 - J16	I-099	N/A	N/A	-	1 N.O.	CLOSE/ DON'T CLOSE	-
1756-OX8I AC(10-265V) / DC(5-150V) ISOLATED RELAY MODULE															
37462B-DO-9	NS_BLD_MOV023_SEC_OPN_CMD	DO	NORTH/SOUTH BLEED VALVE MOV-023 SECONDARY OPEN COMMAND	B1	11	0	MOV-023	37462 - J17	I-099	N/A	N/A	-	1 N.O.	OPEN/ DON'T OPEN	-
37462B-DO-10	NS_BLD_MOV023_SEC_CLS_CMD	DO	NORTH/SOUTH BLEED VALVE MOV-023 SECONDARY CLOSE COMMAND	B1	11	1	MOV-023	37462 - J17	I-099	N/A	N/A	-	1 N.O.	CLOSE/ DON'T CLOSE	-
37462B-DO-11	S_CC_TCV_518_SEC_SEL_HI_CMD	DO	SOUTH COOLING CHAMBER VALVE TCV-518 SECONDARY SELECT HIGH COMMAND	B1	11	2	TCV-518	37462 - J21	I-088	N/A	N/A	-	1 N.O. / 1 N.C. CONTACT	B1 SELECT / A1 SELECT	-
37462B-DO-12	S_CC_TCV_518_SEC_SEL_LO_CMD	DO	SOUTH COOLING CHAMBER VALVE TCV-518 SECONDARY SELECT LOW COMMAND	B1	11	3	TCV-518	37462 - J21	I-088	N/A	N/A	-	1 N.O. / 1 N.C. CONTACT	B1 SELECT / A1 SELECT	-
† 37462B-DO-13	SPARE4_ISO_VLV300B_OPN_CMD	DO	SPARE DUCT 4 ISOLATION VALVE MOV-300B OPEN COMMAND	B1	11	4	MOV-300B	37462 - J45	I-100	N/A	N/A	-	1 N.O.	OPEN/ DON'T OPEN	-
† 37462B-DO-14	SPARE4_ISO_VLV300B_CLS_CMD	DO	SPARE DUCT 4 ISOLATION VALVE MOV-300B CLOSE COMMAND	B1	11	5	MOV-300B	37462 - J45	I-100	N/A	N/A	-	1 N.O.	CLOSE/DON'T CLOSE	-
† 37462B-DO-15	SPARE1_ISO_VLV240B_OPN_CMD	DO	SPARE DUCT 1 ISOLATION VALVE MOV-240B OPEN COMMAND	B1	11	6	MOV-240B	37462 - J46	I-100	N/A	N/A	-	1 N.O.	OPEN/ DON'T OPEN	-
† 37462B-DO-16	SPARE1_ISO_VLV240B_CLS_CMD	DO	SPARE DUCT 1 ISOLATION VALVE MOV-240B CLOSE COMMAND	B1	11	7	MOV-240B	37462 - J46	I-100	N/A	N/A	-	1 N.O.	CLOSE/DON'T CLOSE	-
1756-OX8I AC(10-265V) / DC(5-150V) ISOLATED RELAY MODULE															
37462B-DO-17	ICPS_CC_TCV_519_SEC_SEL_HI_CMD	DO	ICPS COOLING CHAMBER VALVE TCV-519 SECONDARY SELECT HIGH COMMAND	B1	12	0	TCV-519	37462 - J22	I-088	N/A	N/A	-	1 N.O. / 1 N.C. CONTACT	B1 SELECT / A1 SELECT	-
37462B-DO-18	ICPS_CC_TCV_519_SEC_SEL_LO_CMD	DO	ICPS COOLING CHAMBER VALVE TCV-519 SECONDARY SELECT LOW COMMAND	B1	12	1	TCV-519	37462 - J22	I-088	N/A	N/A	-	1 N.O. / 1 N.C. CONTACT	B1 SELECT / A1 SELECT	-
37462B-DO-19	ICPS_SUP_MOV017_SEC_OPN_CMD	DO	ICPS SUPPLY VALVE MOV-017 SECONDARY OPEN COMMAND	B1	12	2	MOV-017	37462 - J18	I-099	N/A	N/A	-	1 N.O.	OPEN/ DON'T OPEN	-
37462B-DO-20	ICPS_SUP_MOV017_SEC_CLS_CMD	DO	ICPS SUPPLY VALVE MOV-017 SECONDARY CLOSE COMMAND	B1	12	3	MOV-017	37462 - J18	I-099	N/A	N/A	-	1 N.O.	CLOSE/ DON'T CLOSE	-
37462B-DO-21	ICPS_DIS_MOV018_SEC_OPN_CMD	DO	ICPS DISCHARGE VALVE MOV-018 SECONDARY OPEN COMMAND	B1	12	4	MOV-018	37462 - J19	I-099	N/A	N/A	-	1 N.O.	OPEN/ DON'T OPEN	-
37462B-DO-22	ICPS_DIS_MOV018_SEC_CLS_CMD	DO	ICPS DISCHARGE VALVE MOV-018 SECONDARY CLOSE COMMAND	B1	12	5	MOV-018	37462 - J19	I-099	N/A	N/A	-	1 N.O.	CLOSE/ DON'T CLOSE	-
37462B-DO-23	ICPS_BLD_MOV019_SEC_OPN_CMD	DO	ICPS BLEED VALVE MOV-019 SECONDARY OPEN COMMAND	B1	12	6	MOV-019	37462 - J13	I-099	N/A	N/A	-	1 N.O.	OPEN/ DON'T OPEN	-
37462B-DO-24	ICPS_BLD_MOV019_SEC_CLS_CMD	DO	ICPS BLEED VALVE MOV-019 SECONDARY CLOSE COMMAND	B1	12	7	MOV-019	37462 - J13	I-099	N/A	N/A	-	1 N.O.	CLOSE/ DON'T CLOSE	-
1756-OB8EI DC (10-30V) ELECTRONICALLY FUSED ISOLATED OUTPUT MODULE															
37462B-DO-25	37462_D220_ON_CMD	DO	37462 - D220 INSTRUMENT BUS POWER ON COMMAND	B1	13	0	K3	N/A	I-093	TB2 +D210	TB3 D1R	I-093	10 - 30 VDC	PWR ON/ PWR OFF	-
37462B-DO-26	37462_D221_ON_CMD	DO	37462 - D221 COMMAND BUS POWER ON COMMAND	B1	13	1	K4	N/A	I-093	TB2 +D210	TB3 D1R	I-093	10 - 30 VDC	PWR ON/ PWR OFF	-
37462B-DO-27		DO		B1	13	2									
37462B-DO-28		DO		B1	13	3									
37462B-DO-29		DO		B1	13	4									
37462B-DO-30		DO		B1	13	5									
37462B-DO-31		DO		B1	13	6									
37462B-DO-32		DO		B1	13	7									
1756-OB8EI DC (10-30V) ELECTRONICALLY FUSED ISOLATED OUTPUT MODULE															
37462B-DO-33	37462_D230A_ON_CMD	DO	37462 - D230A INSTRUMENT BUS POWER ON COMMAND	B1	14	0	TB8 +D230A	N/A	I-094	TB8 +D220	TB3 D1R	I-094	10 - 30 VDC	PWR ON/ PWR OFF	-
37462B-DO-34	37462_D230B_ON_CMD	DO	37462 - D230B INSTRUMENT BUS POWER ON COMMAND	B1	14	1	TB8 +D230B	N/A	I-094	TB8 +D220	TB3 D1R	I-094	10 - 30 VDC	PWR ON/ PWR OFF	-
37462B-DO-35	37462_D230C_ON_CMD	DO	37462 - D230C INSTRUMENT BUS POWER ON COMMAND	B1	14	2	TB8 +D230C	N/A	I-094	TB8 +D220	TB3 D1R	I-094	10 - 30 VDC	PWR ON/ PWR OFF	-
37462B-DO-36	37462_D230D_ON_CMD	DO	37462 - D230D INSTRUMENT BUS POWER ON COMMAND	B1	14	3	TB8 +D230D	N/A	I-094	TB8 +D220	TB3 D1R	I-094	10 - 30 VDC	PWR ON/ PWR OFF	-
37462B-DO-37	37462_D230E_ON_CMD	DO	37462 - D230E INSTRUMENT BUS POWER ON COMMAND	B1	14	4	TB8 +D230E	N/A	I-094	TB8 +D220	TB3 D1R	I-094	10 - 30 VDC	PWR ON/ PWR OFF	-
37462B-DO-38	37462_D230F_ON_CMD	DO	37462 - D230F INSTRUMENT BUS POWER ON COMMAND	B1	14	5	TB8 +D230F	N/A	I-094	TB8 +D220	TB3 D1R	I-094	10 - 30 VDC	PWR ON/ PWR OFF	-
37462B-DO-39	37462_D230G_ON_CMD	DO	37462 - D230G INSTRUMENT BUS POWER ON COMMAND	B1	14	6	TB8 +D230G	N/A	I-094	TB8 +D220	TB3 D1R	I-094	10 - 30 VDC	PWR ON/ PWR OFF	-
37462B-DO-40	37462_D230H_ON_CMD	DO	37462 - D230H INSTRUMENT BUS POWER ON COMMAND	B1	14	7	TB8 +D230H	N/A	I-094	TB8 +D220	TB3 D1R	I-094	10 - 30 VDC	PWR ON/ PWR OFF	-
1756-OB8EI DC (10-30V) ELECTRONICALLY FUSED ISOLATED OUTPUT MODULE															
37462B-DO-41	37462_D231A_ON_CMD	DO	37462 - D231A COMMAND BUS POWER ON COMMAND	B1	15	0	TB9 +D231A	N/A	I-094	TB9 +D221	TB3 D1R	I-094	10 - 30 VDC	PWR ON/ PWR OFF	-
37462B-DO-42	37462_D231B_ON_CMD	DO	37462 - D231B COMMAND BUS POWER ON COMMAND	B1	15	1	TB9 +D231B	N/A	I-094	TB9 +D221	TB3 D1R	I-094	10 - 30 VDC	PWR ON/ PWR OFF	-
37462B-DO-43	37462_D231C_ON_CMD	DO	37462 - D231C COMMAND BUS POWER ON COMMAND	B1	15	2	TB9 +D231C	N/A	I-094	TB9 +D221	TB3 D1R	I-094	10 - 30 VDC	PWR ON/ PWR OFF	-
37462B-DO-44	37462_D231D_ON_CMD	DO	37462 - D231D COMMAND BUS POWER ON COMMAND	B1	15	3	TB9 +D231D	N/A	I-094	TB9 +D221	TB3 D1R	I-094	10 - 30 VDC	PWR ON/ PWR OFF	-
37462B-DO-45	37462_D231E_ON_CMD	DO	37462 - D231E COMMAND BUS POWER ON COMMAND	B1	15	4	TB9 +D231E	N/A	I-094	TB9 +D221	TB3 D1R	I-094	10 - 30 VDC	PWR ON/ PWR OFF	-
37462B-DO-46	37462_D231F_ON_CMD	DO	37462 - D231F COMMAND BUS POWER ON COMMAND	B1	15	5	TB9 +D231F	N/A	I-094	TB9 +D221	TB3 D1R	I-094	10 - 30 VDC	PWR ON/ PWR OFF	-
37462B-DO-47	37462_D231G_ON_CMD	DO	37462 - D231G COMMAND BUS POWER ON COMMAND	B1	15	6	TB9 +D231G	N/A	I-094	TB9 +D221	TB3 D1R	I-094	10 - 30 VDC	PWR ON/ PWR OFF	-
37462B-DO-48	37462_D231H_ON_CMD	DO	37462 - D231H COMMAND BUS POWER ON COMMAND	B1	15	7	TB9 +D231H	N/A	I-094	TB9 +D221	TB3 D1R	I-094	10 - 30 VDC	PWR ON/ PWR OFF	-
1756-OX8I AC(10-265V) / DC(5-150V) ISOLATED RELAY MODULE															
37462B-DO-49	GN2_SUP_MOV701A_SEC_OPN_CMD	DO	GN2 SUPPLY VALVE MOV-701A SECONDARY OPEN COMMAND	B1	16	0	MOV-701A	37462-J61	I-099	N/A	N/A	-	1 N.O.	OPEN/ DON'T OPEN	-
37462B-DO-50	GN2_SUP_MOV701A_SEC_CLS_CMD	DO	GN2 SUPPLY VALVE MOV-701A SECONDARY CLOSE COMMAND	B1	16	1	MOV-701A	37462-J61	I-099	N/A	N/A	-	1 N.O.	CLOSE/ DON'T CLOSE	-
37462B-DO-51	GN2_SUP_MOV701B_SEC_OPN_CMD	DO	GN2 SUPPLY VALVE MOV-701B SECONDARY OPEN COMMAND	B1	16	2	MOV-701B	37462-J62	I-099	N/A	N/A	-	1 N.O.	OPEN/ DON'T OPEN	-
37462B-DO-52	GN2_SUP_MOV701B_SEC_CLS_CMD	DO	GN2 SUPPLY VALVE MOV-701B SECONDARY CLOSE COMMAND	B1	16	3	MOV-701B	37462-J62	I-099	N/A	N/A	-	1 N.O.	CLOSE/ DON'T CLOSE	-
37462B-DO-53		DO		B1	16	4									
37462B-DO-54		DO		B1	16	5									
37462B-DO-55		DO		B1	16	6									
37462B-DO-56		DO		B1	16	7									

NOTES:

1. ALL CELLS MARKED TBD SHALL BE DETERMINED BY THE CONTRACTOR AFTER FINAL EQUIPMENT SELECTION.
2. ALL BLANK ROWS ARE SPARE I/O POINTS.
3. REFERENCE SHEET I-066 FOR ENCLOSURE 37462 CONTROLS ONE-LINES.
4. THE CONTRACTOR SHALL MODIFY THE EXISTING KGCS SOFTWARE AND PLC CONFIGURATION FOR USE IN THE CONTRACTOR PROVIDED REDUNDANT PLC SYSTEM IN ACCORDANCE WITH THE TAG INDEX TABLE ON THIS SHEET AND THE SEQUENCE OF OPERATIONS ON SHEETS I-102 THROUGH I-104.
5. CHANNEL ASSIGNMENTS FOR SPARE DUCTS ARE FOR INSTALL OPTION. THESE CHANNELS ARE DENOTED BY "†" SYMBOL.

SYM	ZONE	DESCRIPTION	DATE	APPROVED
REVISIONS				

JACOBS™
Jacobs Technology Inc.

SIGNATURES		DATE
DRAWN	M. HENNIGH	3/07/14
CHECKED	J. WHITEFORD	3/07/14
SUBMITTED	S. RITTER	3/07/14
ST OF LICENSURE: TN LICENSE NO: 00110556		
APPROVED	G. WARD	3/07/14
	S. HUNT	3/07/14

NATIONAL AERONAUTICS AND SPACE ADMINISTRATION
JOHN F. KENNEDY SPACE CENTER, NASA
KENNEDY SPACE CENTER, FLORIDA

KSC LAUNCH PAD 39-B
ENVIRONMENTAL CONTROL SYSTEM (ECS) REFURBISHMENT
INSTRUMENTATION
ECS LP SYSTEM A1/B1 CHASSIS 37462
TAG INDEX SHEET 4

FILE NO.	SIZE	DWG.NO.	REV
	F	79K39602	
PCN. NO. 98898		SHEET 148 OF 187	

I-065

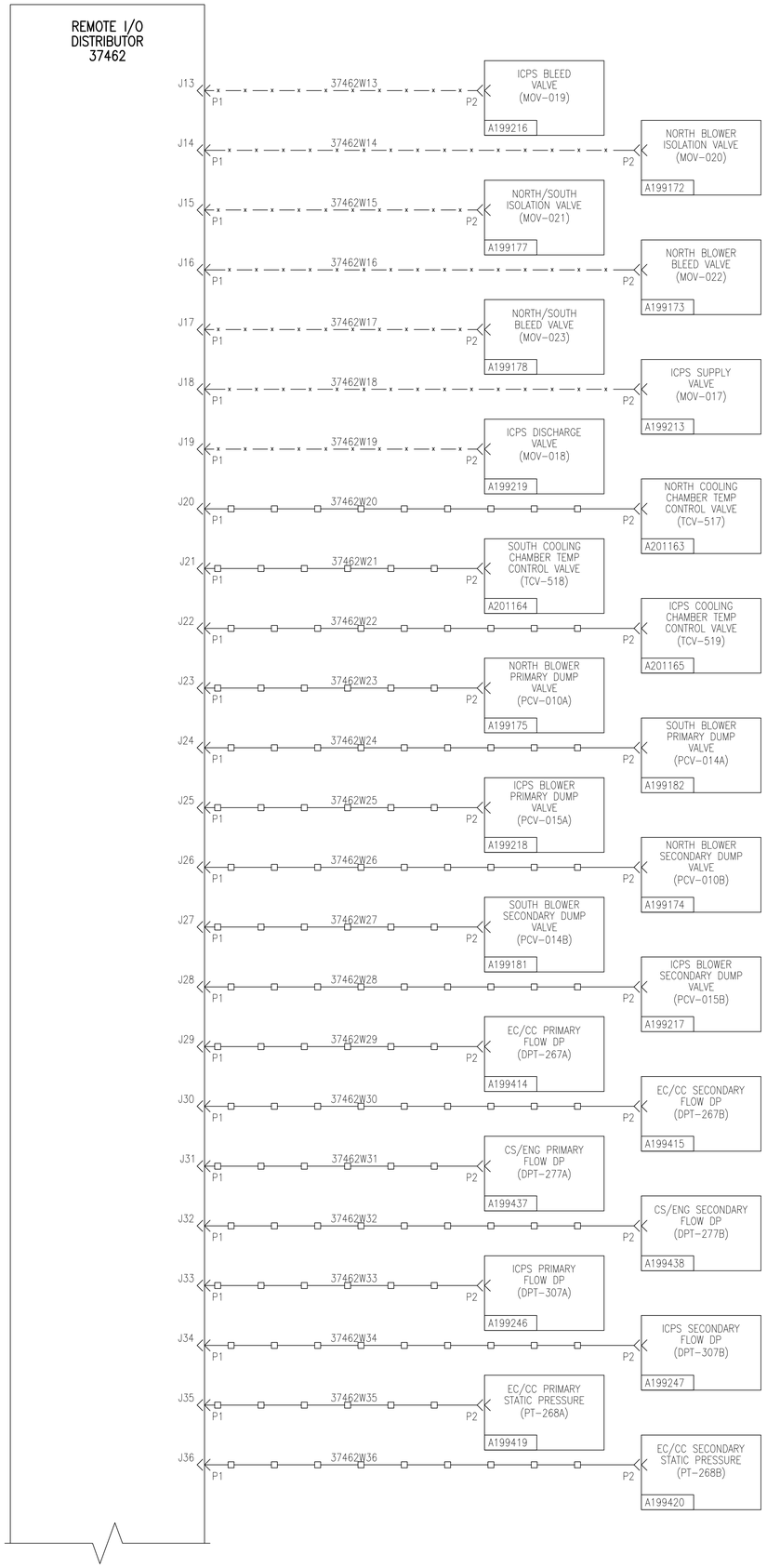

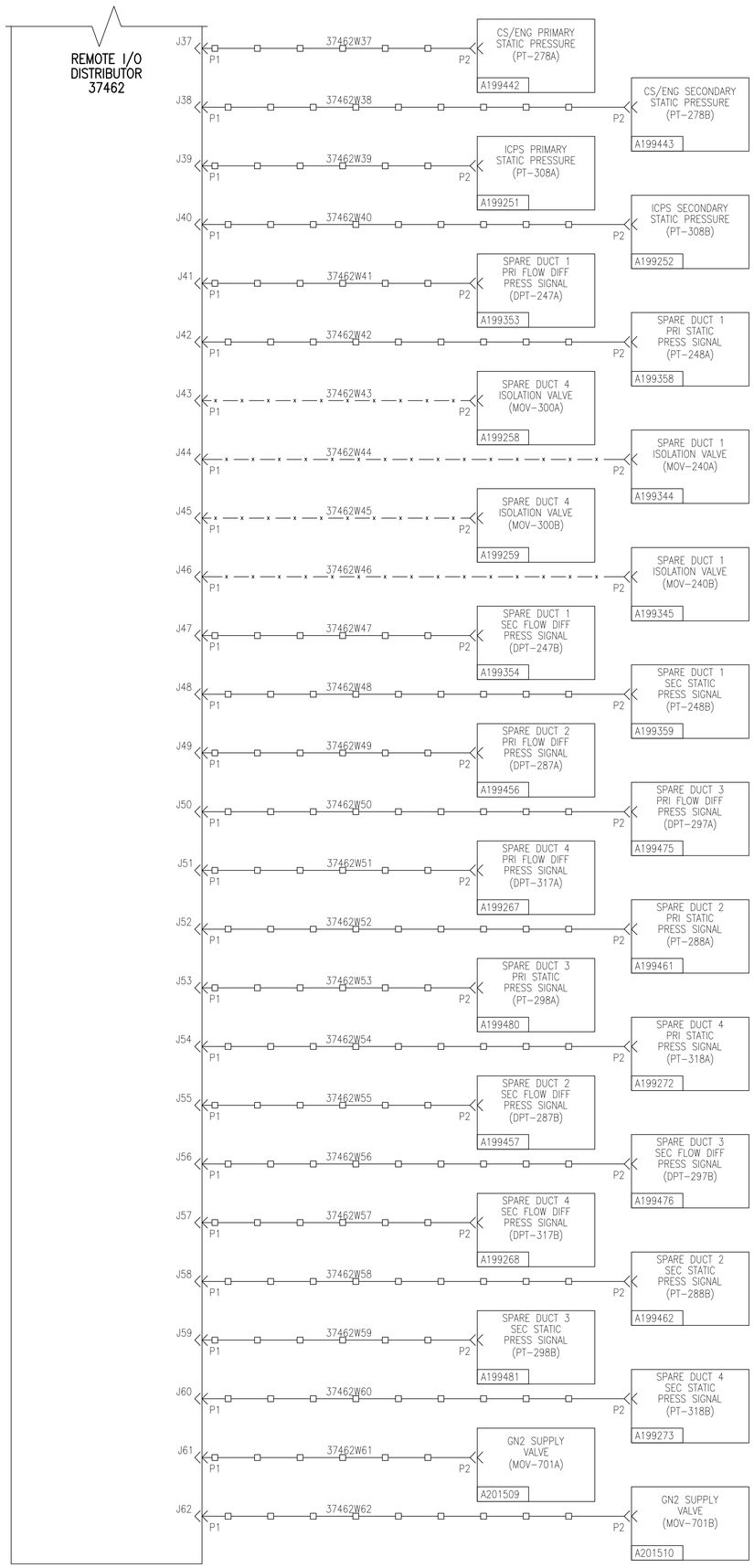

NOTES:

1. THE CONTRACTOR SHALL ADHERE TO THE FOLLOWING SPECIFICATIONS FOR ACCEPTABLE CABLE AND CONNECTOR TYPES, FABRICATION, AND INSTALLATION:
   - KSC-E-165
   - KSC-E-166
   - SSPC SP-1 GUIDELINES
   - NASA-STD-5008 (LATEST VERSION)
   - MIL-DTL-5541
   - 120E3100001 (HEAVY DUTY CABLE SPECIFICATION, GENERAL)
   - 120E3100003 (ELECTRICAL CABLE FABRICATION REQUIREMENTS)
2. THIS ONE-LINE DEPICTS FINAL CONNECTOR AND CABLING ARRANGEMENT AFTER THE REMOTE I/O CONNECTORS AND CABLING HAVE BEEN MODIFIED.
3. REFERENCE SHEETS I-014 AND I-015 FOR 28VDC POWER AND CONTROLNET CONNECTORS AND CABLING DETAILS.
4. UNLESS OTHERWISE SPECIFIED ALL CABLING SHOWN ON THIS SHEET SHALL BE NEW. THESE CABLES SHALL BE PROVIDED BY AND INSTALLED BY THE CONTRACTOR.
5. REFERENCE SHEET I-101 FOR ADDITIONAL CABLE SPECIFICATION AND FABRICATION DETAILS.

6 REFERENCE NASA DOCUMENT 120E3100001, "SPECIFICATION FOR HEAVY DUTY GSE CABLE, GENERAL". ALL CABLES USED FOR THE INTERCONNECTION OF ECS EQUIPMENT AND ENCLOSURES SHALL CONFORM TO THESE SPECIFICATIONS.

7 REFERENCE APPENDIX A OF DOCUMENT 120E3100001 FOR INDIVIDUAL CABLE SPECIFICATIONS.

6 7 CABLE SPECIFICATION TABLE

LINE SYMBOL	CABLE SPECIFICATION
—□—□—□—	120E3100001-001
—//—//—//—//—	120E3100001-004
— — — — — — —	120E3100001-051
—x—x—x—x—	120E3100001-006

SYM	ZONE	DESCRIPTION	DATE	APPROVED
		REVISIONS		

JACOBS
Jacobs Technology Inc.

SIGNATURES		DATE
DRAWN	M. HENNIGH	3/07/14
CHECKED	J. WHITEFORD	3/07/14
SUBMITTED	S. RITTER	3/07/14
ST OF LICENSURE: TN LICENSE NO: 00110556		
APPROVED	G. WARD	3/07/14
	S. HUNT	3/07/14

NATIONAL AERONAUTICS AND SPACE ADMINISTRATION
JOHN F. KENNEDY SPACE CENTER, NASA
KENNEDY SPACE CENTER, FLORIDA

KSC LAUNCH PAD 39-B
ENVIRONMENTAL CONTROL SYSTEM (ECS) REFURBISHMENT

INSTRUMENTATION
ECS LP SYSTEM A1/B1 CHASSIS 37462
CONTROLS ONE-LINE

FILE NO.	SIZE	DWG.NO.	REV
	F	79K39602	
PCN. NO. 98898		SHEET 149 OF 187	

I-066

1 ECS RIO CABINET 37462 CONNECTOR ALLOCATION TABLE

ENCLOSURE CONNECTOR	ENCLOSURE CONNECTOR TYPE (JAMNUT RECEPTACLE)	MATING CONNECTOR (PLUG)	DESCRIPTION	DISPOSITION
J1	ADBJ79-E1-UBJ20	PL75	CONTROLNET IN PLC B1 CHA	PROVIDE AND INSTALL NEW CONNECTOR, WIRING, AND TERMINAL BLOCKS
J2	ADBJ79-E1-UBJ20	PL75	CONTROLNET IN PLC B1 CHB	PROVIDE AND INSTALL NEW CONNECTOR, WIRING, AND TERMINAL BLOCKS
J3	ADBJ79-E1-UBJ20	PL75	CONTROLNET IN PLC A1 CHB	PROVIDE AND INSTALL NEW CONNECTOR, WIRING, AND TERMINAL BLOCKS
J4	ADBJ79-E1-UBJ20	PL75	CONTROLNET IN PLC A1 CHA	PROVIDE AND INSTALL NEW CONNECTOR, WIRING, AND TERMINAL BLOCKS
J5	ADBJ79-E1-UBJ20	PL75	CONTROLNET IN PLC A1 CHA	PROVIDE AND INSTALL NEW CONNECTOR, WIRING, AND TERMINAL BLOCKS
J6	ADBJ79-E1-UBJ20	PL75	CONTROLNET IN PLC A1 CHB	PROVIDE AND INSTALL NEW CONNECTOR, WIRING, AND TERMINAL BLOCKS
J7	ADBJ79-E1-UBJ20	PL75	CONTROLNET IN PLC B1 CHA	PROVIDE AND INSTALL NEW CONNECTOR, WIRING, AND TERMINAL BLOCKS
J8	ADBJ79-E1-UBJ20	PL75	CONTROLNET IN PLC B1 CHB	PROVIDE AND INSTALL NEW CONNECTOR, WIRING, AND TERMINAL BLOCKS
J9	MS3454LS32-1P	MS3456LS32-1S	28VDC POWER INPUT SYSTEM A	PROVIDE AND INSTALL NEW CONNECTOR, WIRING, AND TERMINAL BLOCKS
J10	MS3454LS32-1P	MS3456LS32-1S	28VDC POWER INPUT SYSTEM B	PROVIDE AND INSTALL NEW CONNECTOR, WIRING, AND TERMINAL BLOCKS
J13	D38999 / 24SE8SN	D38999 / 26SE8PN	CONNECTOR USED FOR MOV-019	PROVIDE AND INSTALL NEW CONNECTOR, WIRING, AND TERMINAL BLOCKS
J14	D38999 / 24SE8SN	D38999 / 26SE8PN	CONNECTOR USED FOR MOV-020	PROVIDE AND INSTALL NEW CONNECTOR, WIRING, AND TERMINAL BLOCKS
J15	D38999 / 24SE8SN	D38999 / 26SE8PN	CONNECTOR USED FOR MOV-021	PROVIDE AND INSTALL NEW CONNECTOR, WIRING, AND TERMINAL BLOCKS
J16	D38999 / 24SE8SN	D38999 / 26SE8PN	CONNECTOR USED FOR MOV-022	PROVIDE AND INSTALL NEW CONNECTOR, WIRING, AND TERMINAL BLOCKS
J17	D38999 / 24SE8SN	D38999 / 26SE8PN	CONNECTOR USED FOR MOV-023	PROVIDE AND INSTALL NEW CONNECTOR, WIRING, AND TERMINAL BLOCKS
J18	D38999 / 24SE8SN	D38999 / 26SE8PN	CONNECTOR USED FOR MOV-017	PROVIDE AND INSTALL NEW CONNECTOR, WIRING, AND TERMINAL BLOCKS
J19	D38999 / 24SE8SN	D38999 / 26SE8PN	CONNECTOR USED FOR MOV-018	PROVIDE AND INSTALL NEW CONNECTOR, WIRING, AND TERMINAL BLOCKS
J20	D38999 / 24SE8SN	D38999 / 26SE8PN	CONNECTOR USED FOR TCV-517	PROVIDE AND INSTALL NEW CONNECTOR, WIRING, AND TERMINAL BLOCKS
J21	D38999 / 24SE8SN	D38999 / 26SE8PN	CONNECTOR USED FOR TCV-518	PROVIDE AND INSTALL NEW CONNECTOR, WIRING, AND TERMINAL BLOCKS
J22	D38999 / 24SE8SN	D38999 / 26SE8PN	CONNECTOR USED FOR TCV-519	PROVIDE AND INSTALL NEW CONNECTOR, WIRING, AND TERMINAL BLOCKS
J23	D38999 / 24SE8SN	D38999 / 26SE8PN	CONNECTOR USED FOR PCV-010A	PROVIDE AND INSTALL NEW CONNECTOR, WIRING, AND TERMINAL BLOCKS
J24	D38999 / 24SE8SN	D38999 / 26SE8PN	CONNECTOR USED FOR PCV-014A	PROVIDE AND INSTALL NEW CONNECTOR, WIRING, AND TERMINAL BLOCKS
J25	D38999 / 24SE8SN	D38999 / 26SE8PN	CONNECTOR USED FOR PCV-015A	PROVIDE AND INSTALL NEW CONNECTOR, WIRING, AND TERMINAL BLOCKS
J26	D38999 / 24SE8SN	D38999 / 26SE8PN	CONNECTOR USED FOR PCV-010B	PROVIDE AND INSTALL NEW CONNECTOR, WIRING, AND TERMINAL BLOCKS
J27	D38999 / 24SE8SN	D38999 / 26SE8PN	CONNECTOR USED FOR PCV-014B	PROVIDE AND INSTALL NEW CONNECTOR, WIRING, AND TERMINAL BLOCKS
J28	D38999 / 24SE8SN	D38999 / 26SE8PN	CONNECTOR USED FOR PCV-015B	PROVIDE AND INSTALL NEW CONNECTOR, WIRING, AND TERMINAL BLOCKS
J29	D38999 / 24SE8SN	D38999 / 26SE8PN	CONNECTOR USED FOR DPT-267A	PROVIDE AND INSTALL NEW CONNECTOR, WIRING, AND TERMINAL BLOCKS
J30	D38999 / 24SE8SN	D38999 / 26SE8PN	CONNECTOR USED FOR DPT-267B	PROVIDE AND INSTALL NEW CONNECTOR, WIRING, AND TERMINAL BLOCKS
J31	D38999 / 24SE8SN	D38999 / 26SE8PN	CONNECTOR USED FOR DPT-277A	PROVIDE AND INSTALL NEW CONNECTOR, WIRING, AND TERMINAL BLOCKS
J32	D38999 / 24SE8SN	D38999 / 26SE8PN	CONNECTOR USED FOR DPT-277B	PROVIDE AND INSTALL NEW CONNECTOR, WIRING, AND TERMINAL BLOCKS
J33	D38999 / 24SE8SN	D38999 / 26SE8PN	CONNECTOR USED FOR DPT-307A	PROVIDE AND INSTALL NEW CONNECTOR, WIRING, AND TERMINAL BLOCKS
J34	D38999 / 24SE8SN	D38999 / 26SE8PN	CONNECTOR USED FOR DPT-307B	PROVIDE AND INSTALL NEW CONNECTOR, WIRING, AND TERMINAL BLOCKS
J35	D38999 / 24SE8SN	D38999 / 26SE8PN	CONNECTOR USED FOR PT-268A	PROVIDE AND INSTALL NEW CONNECTOR, WIRING, AND TERMINAL BLOCKS
J36	D38999 / 24SE8SN	D38999 / 26SE8PN	CONNECTOR USED FOR PT-268B	PROVIDE AND INSTALL NEW CONNECTOR, WIRING, AND TERMINAL BLOCKS
J37	D38999 / 24SE8SN	D38999 / 26SE8PN	CONNECTOR USED FOR PT-278A	PROVIDE AND INSTALL NEW CONNECTOR, WIRING, AND TERMINAL BLOCKS
J38	D38999 / 24SE8SN	D38999 / 26SE8PN	CONNECTOR USED FOR PT-278B	PROVIDE AND INSTALL NEW CONNECTOR, WIRING, AND TERMINAL BLOCKS
J39	D38999 / 24SE8SN	D38999 / 26SE8PN	CONNECTOR USED FOR PT-308A	PROVIDE AND INSTALL NEW CONNECTOR, WIRING, AND TERMINAL BLOCKS
J40	D38999 / 24SE8SN	D38999 / 26SE8PN	CONNECTOR USED FOR PT-308B	PROVIDE AND INSTALL NEW CONNECTOR, WIRING, AND TERMINAL BLOCKS
J41	D38999 / 24SE8SN	D38999 / 26SE8PN	CONNECTOR USED FOR DPT-247A (INSTALL OPTION)	PROVIDE AND INSTALL NEW CONNECTOR, WIRING, AND TERMINAL BLOCKS
J42	D38999 / 24SE8SN	D38999 / 26SE8PN	CONNECTOR USED FOR PT-248A (INSTALL OPTION)	PROVIDE AND INSTALL NEW CONNECTOR, WIRING, AND TERMINAL BLOCKS
J43	D38999 / 24SE6SN	D38999 / 26SE6PN	CONNECTOR USED FOR MOV-300A (INSTALL OPTION)	PROVIDE AND INSTALL NEW CONNECTOR, WIRING, AND TERMINAL BLOCKS
J44	D38999 / 24SE6SN	D38999 / 26SE6PN	CONNECTOR USED FOR MOV-240A (INSTALL OPTION)	PROVIDE AND INSTALL NEW CONNECTOR, WIRING, AND TERMINAL BLOCKS
J45	D38999 / 24SE6SN	D38999 / 26SE6PN	CONNECTOR USED FOR MOV-300B (INSTALL OPTION)	PROVIDE AND INSTALL NEW CONNECTOR, WIRING, AND TERMINAL BLOCKS
J46	D38999 / 24SE6SN	D38999 / 26SE6PN	CONNECTOR USED FOR MOV-240B (INSTALL OPTION)	PROVIDE AND INSTALL NEW CONNECTOR, WIRING, AND TERMINAL BLOCKS
J47	D38999 / 24SE8SN	D38999 / 26SE8PN	CONNECTOR USED FOR DPT-247B (INSTALL OPTION)	PROVIDE AND INSTALL NEW CONNECTOR, WIRING, AND TERMINAL BLOCKS
J48	D38999 / 24SE8SN	D38999 / 26SE8PN	CONNECTOR USED FOR PT-248B (INSTALL OPTION)	PROVIDE AND INSTALL NEW CONNECTOR, WIRING, AND TERMINAL BLOCKS
J49	D38999 / 24SE8SN	D38999 / 26SE8PN	CONNECTOR USED FOR DPT-287A (INSTALL OPTION)	PROVIDE AND INSTALL NEW CONNECTOR, WIRING, AND TERMINAL BLOCKS
J50	D38999 / 24SE8SN	D38999 / 26SE8PN	CONNECTOR USED FOR DPT-297A (INSTALL OPTION)	PROVIDE AND INSTALL NEW CONNECTOR, WIRING, AND TERMINAL BLOCKS
J51	D38999 / 24SE8SN	D38999 / 26SE8PN	CONNECTOR USED FOR DPT-317A (INSTALL OPTION)	PROVIDE AND INSTALL NEW CONNECTOR, WIRING, AND TERMINAL BLOCKS
J52	D38999 / 24SE8SN	D38999 / 26SE8PN	CONNECTOR USED FOR PT-288A (INSTALL OPTION)	PROVIDE AND INSTALL NEW CONNECTOR, WIRING, AND TERMINAL BLOCKS
J53	D38999 / 24SE8SN	D38999 / 26SE8PN	CONNECTOR USED FOR PT-298A (INSTALL OPTION)	PROVIDE AND INSTALL NEW CONNECTOR, WIRING, AND TERMINAL BLOCKS
J54	D38999 / 24SE8SN	D38999 / 26SE8PN	CONNECTOR USED FOR PT-318A (INSTALL OPTION)	PROVIDE AND INSTALL NEW CONNECTOR, WIRING, AND TERMINAL BLOCKS
J55	D38999 / 24SE8SN	D38999 / 26SE8PN	CONNECTOR USED FOR DPT-287B (INSTALL OPTION)	PROVIDE AND INSTALL NEW CONNECTOR, WIRING, AND TERMINAL BLOCKS
J56	D38999 / 24SE8SN	D38999 / 26SE8PN	CONNECTOR USED FOR DPT-297B (INSTALL OPTION)	PROVIDE AND INSTALL NEW CONNECTOR, WIRING, AND TERMINAL BLOCKS
J57	D38999 / 24SE8SN	D38999 / 26SE8PN	CONNECTOR USED FOR DPT-317B (INSTALL OPTION)	PROVIDE AND INSTALL NEW CONNECTOR, WIRING, AND TERMINAL BLOCKS
J58	D38999 / 24SE8SN	D38999 / 26SE8PN	CONNECTOR USED FOR PT-288B (INSTALL OPTION)	PROVIDE AND INSTALL NEW CONNECTOR, WIRING, AND TERMINAL BLOCKS
J59	D38999 / 24SE8SN	D38999 / 26SE8PN	CONNECTOR USED FOR PT-298B (INSTALL OPTION)	PROVIDE AND INSTALL NEW CONNECTOR, WIRING, AND TERMINAL BLOCKS
J60	D38999 / 24SE8SN	D38999 / 26SE8PN	CONNECTOR USED FOR PT-318B (INSTALL OPTION)	PROVIDE AND INSTALL NEW CONNECTOR, WIRING, AND TERMINAL BLOCKS
J61	D38999 / 24SE6SN	D38999 / 26SE6PN	CONNECTOR USED FOR MOV-701A	PROVIDE AND INSTALL NEW CONNECTOR, WIRING, AND TERMINAL BLOCKS
J62	D38999 / 24SE6SN	D38999 / 26SE6PN	CONNECTOR USED FOR MOV-701B	PROVIDE AND INSTALL NEW CONNECTOR, WIRING, AND TERMINAL BLOCKS

2 RIO CABINET 37462 DC DEVICE POWER SCHEDULE

POWER SYSTEM FEED (A OR B)	MAIN DC POWER BUS	CABINET TB DESIGNATION	SECONDARY DC POWER BUS	CABINET TB DESIGNATION	CABINET INTERFACE CONNECTOR	DEVICE POWERED	REF. SHEET
GSP SYSTEM A	INSTRUMENT POWER BUS +D120	TB-6 (1 THRU 5)	D130A	TB6-6	37462 – J23 37462 – J33 37462 – J17 37462 – J51	PCV-010A DPT-307A MOV-023 DPT-317A	I-079 I-097 I-099 I-097
			D130B	TB6-7	37462 – J24 37462 – J35 37462 – J18 37462 – J54	PCV-014A PT-268A MOV-017 PT-318A	I-079 I-097 I-099 I-097
			D130C	TB6-8	37462 – J25 37462 – J37 37462 – J19 37462 – J62	PCV-015A PT-278A MOV-018 MOV-701B	I-079 I-097 I-099 I-099
			D130D	TB6-9	37462 – J20 37462 – J39 37462 – J41 37462 – J42	TCV-517 PT-308A DPT-247A PT-248A	I-088 I-097 I-097 I-097
			D130E	TB6-10	37462 – J21 37462 – J13 37462 – J49 37462 – J52	TCV-518 MOV-019 DPT-287A PT-288A	I-088 I-099 I-097 I-097
			D130F	TB6-11	37462 – J22 37462 – J14 37462 – J50 37462 – J53	TCV-519 MOV-020 DPT-297A PT-298A	I-088 I-099 I-097 I-097
			D130G	TB6-12	37462 – J29 37462 – J15 37462 – J44	DPT-267A MOV-021 MOV-240A	I-097 I-099 I-100
			D130H	TB6-13	37462 – J31 37462 – J16 37462 – J43	DPT-277A MOV-022 MOV-300A	I-097 I-099 I-100
	CONTROL POWER BUS +D121	TB-7 (1 THRU 5)	D131A	TB7-6			
			D131B	TB7-7			
			D131C	TB7-8			
			D131D	TB7-9			
			D131E	TB7-10			
			D131F	TB7-11			
			D131G	TB7-12			
			D131H	TB7-13			
GSP SYSTEM B	INSTRUMENT POWER BUS +D220	TB-8 (1 THRU 5)	D230A	TB8-6	37462 – J26 37462 – J34	PCV-010B DPT-307B	I-079 I-097
			D230B	TB8-7	37462 – J27 37462 – J36	PCV-014B PT-268B	I-079 I-097
			D230C	TB8-8	37462 – J28 37462 – J38	PCV-015B PT-278B	I-079 I-097
			D230D	TB8-9	37462 – J40 37462 – J61	PT-308B MOV-701A	I-097 I-099
			D230E	TB8-10	37462 – J46 37462 – J47 37462 – J48	MOV-240B DPT-247B PT-248B	I-100 I-097 I-097
			D230F	TB8-11	37462 – J45 37462 – J55 37462 – J58	MOV-300B DPT-287B PT-288B	I-100 I-097 I-097
			D230G	TB8-12	37462 – J30 37462 – J56 37462 – J59	DPT-267B DPT-297B PT-298B	I-097 I-097 I-097
			D230H	TB8-13	37462 – J32 37462 – J57 37462 – J60	DPT-277B DPT-317B PT-318B	I-097 I-097 I-097
	CONTROL POWER BUS +D221	TB-9 (1 THRU 5)	D231A	TB9-6			
			D231B	TB9-7			
			D231C	TB9-8			
			D231D	TB9-9			
			D231E	TB9-10			
			D231F	TB9-11			
			D231G	TB9-12			
			D231H	TB9-13			

DEMO & MODIFICATION NOTES:

GENERAL:

1. THE CONNECTOR ALLOCATION TABLE DETAILS CONNECTOR TYPES AND EQUIPMENT INTERCONNECTIONS.
2. 28VDC DISTRIBUTION TABLE DETAILS ALL DEVICES, CONNECTIONS TO REMOTE I/O ENCLOSURE 37462, WHICH REQUIRE 28VDC SOURCE POWER.

SYM	ZONE	DESCRIPTION	DATE	APPROVED
REVISIONS				

JACOBS
Jacobs Technology Inc.

SIGNATURES		DATE
DRAWN	M. HENNIGH	3/07/14
CHECKED	J. WHITEFORD	3/07/14
SUBMITTED	S. RITTER	3/07/14
ST OF LICENSURE: TN LICENSE NO: 00110556		
APPROVED	G. WARD	3/07/14
	S. HUNT	3/07/14

NATIONAL AERONAUTICS AND SPACE ADMINISTRATION
JOHN F. KENNEDY SPACE CENTER, NASA
KENNEDY SPACE CENTER, FLORIDA

KSC LAUNCH PAD 39-B
ENVIRONMENTAL CONTROL SYSTEM (ECS) REFURBISHMENT
INSTRUMENTATION
ECS LP SYSTEM A1/B1 CHASSIS 37462
28VDC & CONNECTOR ALLOCATION TABLES

FILE NO.	SIZE	DWG.NO.	REV
	F	79K39602	
PCN. NO. 98898		SHEET 150 OF 187	

I-067

GENERAL NOTES:

1. THE REMOTE I/O ENCLOSURE 37462 LAYOUTS AND DETAILS ON SHEETS I-069 THROUGH I-075 ARE INTENDED TO CONVEY TO THE CONTRACTOR THE REQUIREMENTS FOR THE LAYOUT, FABRICATION, AND INSTALLATION OF THE NEW REMOTE I/O ENCLOSURE 37462. THESE SHEETS SHALL NOT BE USED FOR FABRICATION. SHEETS I-069 THROUGH I-075 ARE FOR REFERENCE ONLY. THE CONTRACTOR SHALL REFERENCE THESE SHEETS AS A GUIDE TO GENERATE THE DETAILED DESIGN DRAWINGS FOR THE 37462 ENCLOSURE LAYOUTS, DEVICE TERMINATIONS, AND WIRING. THE DETAILED DESIGN DRAWINGS GENERATED BY THE CONTRACTOR SHALL BE APPROVED BY THE NASA CONTRACTING OFFICER BEFORE THE CONTRACTOR BEGINS FABRICATION.
2. FABRICATION OF ENCLOSURE 37462 SHALL OCCUR AT THE CONTRACTORS FABRICATION SHOP. THE ENCLOSURE SHALL GO THROUGH FACTORY ACCEPTANCE TESTING, WITNESSED AND APPROVED BY THE NASA CONTRACTING OFFICER, BEFORE SHIPMENT TO THE INSTALLATION SITE.
3. REMOTE I/O ENCLOSURE 37462, ALL INTERNAL WIRING AND EQUIPMENT SHALL BE PROVIDED AND INSTALLED BY THE CONTRACTOR.
4. REFERENCE SHEET I-066 FOR CABLE ROUTING DETAILS BETWEEN REMOTE I/O ENCLOSURE 37462 AND FIELD DEVICES.
5. REFERENCE SHEET I-067 FOR ENCLOSURE 37462 28VDC DISTRIBUTION AND CONNECTOR ALLOCATION TABLES.
6. CONTRACTOR SHALL USE SHEETS I-062 THROUGH I-067 AND I-076 THROUGH I-101 TO VERIFY AND/OR MODIFY:
   - ALL 28VDC DISTRIBUTION WIRING.
   - ALL WIRING BETWEEN PLC AND FIELD INTERFACE TERMINAL BLOCKS.
   - ALL WIRING BETWEEN ENCLOSURE CONNECTORS AND FIELD INTERFACE TERMINAL BLOCKS.
7. ALL WIRING FROM ENCLOSURE INTERFACE CONNECTORS SHALL BE LANDED ON THE FIELD INTERFACE TERMINAL BLOCKS BEFORE TERMINATING TO THE PLC OR OTHER INTERNAL ENCLOSURE DEVICES.

FABRICATION NOTES:

1. AFTER FACTORY TESTING AND ACCEPTANCE BY THE INSPECTION AGENCY REPRESENTATIVE AND PRIOR TO SHIPMENT OF THE CONTRACT END ITEM, AFFIX A NASA GROUND SUPPORT EQUIPMENT, IDENTIFICATION PLATE (REFERENCE: I-074) TO THE FINISHED ITEM, APPROXIMATELY WHERE SHOWN AND ADHERE USING SILICONE ADHESIVE SEALANT CONFORMING TO MIL-A-46146. THE IDENTIFICATION TAG SHALL BE ELECTROCHEMICALLY ETCHED (TYPE II), DIE STAMPED (TYPE V), ENGRAVED (TYPE VII), OR LASER ENGRAVED (TYPE VIII)--SEE MIL-STD-792--WITH VERTICAL, .100 INCH, SANS SERIF, GOTHIC CHARACTERS, CENTERED BOTH HORIZONTALLY AND VERTICALLY. THE SPECIFIC DATA AND THE TYPE OF DATA REQUIREMENT TO BE ENTERED ON THE ID PLATE BY THE MANUFACTURER SHALL BE FROM TABLE 7 SHEET I-074 OF THIS DRAWING. AFTER DATA ENTRY, COVER THE FACE OF THE IDENTIFICATION PLATE WITH ACRYLIC CRYSTAL CLEAR K01303, KRYLON CORP., 101 PROSPECT AVE, CLEVELAND, OH, OR ENGINEERING APPROVED EQUAL.
2. PERFECT ORIENTATION, COAXIALITY, OR SYMMETRY AT MMC FOR INTERRELATED FEATURES IS REQUIRED UNLESS SEPARATE TOLERANCES ARE SHOWN AT THE FEATURE. GENERAL DRAWING TOLERANCE DOES NOT APPLY TO IMPLIED 90° ANGLES.
3. STOCK SIZES ON PARTS LIST ARE APPROXIMATE, CONTRACTOR SHALL DETERMINE, BEFORE FABRICATION, THE CORRECT DIMENSIONS. ADD APPROPRIATE MATERIAL AS REQUIRED FOR CUTTING AND MACHINING WHEN PURCHASING MATERIAL.
4. REMOVE SCALE AND BURRS AND BREAK SHARP CORNERS AND EDGES.
5. UNLESS OTHERWISE SPECIFIED, FABRICATION OF ELECTRICAL GROUND SUPPORT EQUIPMENT SHALL BE IN ACCORDANCE WITH KSC-E-165 AND KSC-E-166.
6. UNLESS OTHERWISE SPECIFIED, ELECTRICAL PART SUBSTITUTIONS SHALL BE APPROVED BY NASA CONTRACTING OFFICER.
7. AFTER VERIFYING INTENDED CONNECTOR FLANGE PLACEMENT TO INSIDE OR OUTSIDE OF PANEL, PERFORM THE FOLLOWING: MECHANICALLY REMOVE PROTECTIVE COATINGS, AND/OR CONTAMINATION FROM THE CONNECTOR FLANGE MOUNTING LOCATIONS ON PANEL SURFACES TO BARE METAL (OR CONDUCTIVE PLATING) IN ACCORDANCE WITH KSC-E-166 PARAGRAH 3.12.3 AND FIGURE 10. (NOTE: GRINDING IS PROHIBITED. USE PILOT BONDING BRUSH, WIRE BRUSH, SCOTCHBRITE, OR SANDPAPER (400 GRIT AND FINER) FOR MECHANICAL REMOVAL). CLEAN FAYING SURFACES OF CONNECTOR FLANGES AND PANEL IN ACCORDANCE WITH SSPC SP1 (SOLVENT CLEANING). INSPECT SURFACES FOR ANY REMAINING CONTAMINATION AND, IF NECESSARY, RECLEAN IN ACCORDANCE WITH SSPC SP2 (HANDTOOL CLEANING). APPLY A THIN, CONTINUOUS COATING OF GREASE (ITEM 11 ON SHEET I-069) TO FAYING SURFACES. AFTER INSTALLING CONNECTORS, REMOVE EXCESS GREASE WITH A CLEAN, DRY, LINT-FREE RAG. PERFORM DC RESISTANCE CHECK FROM EACH CONNECTOR SHELL TO ADJACENT PANEL. DC RESISTANCE SHALL NOT EXCEED 2.5 MILLIOHMS. PRIOR TO TOUCH UP OF DISTURBED CARBON STEEL AND STAINLESS STEEL FINISH COATINGS, DEGREASE, CLEAN AND DRY THE AFFECTED SURFACES PER THE GUIDELINES IN SSPC SP-1. USING NASA-STD-5008 TABLE 1 AS A GUIDE, BRUSH COAT THE AFFECTED SURFACES, MATCHING COLOR AND PHYSICAL CHARACTERISTICS OF THE ORIGINAL FINISH. TOUCH UP DISTURBED ANODIZED ALUMINUM COATINGS PER MIL-DTL-5541, TYPE I, CLASS IA, BY BRUSH APPLICATION.
8. PRIOR TO GROUND BUS INSTALLATION, APPLY A THIN COAT OF GREASE (ITEM 11 ON SHEET I-069) TO FAYING SURFACES OF STUD AND PANEL DURING STUD INSTALLATION. PERFORM DC RESISTANCE CHECK OF STUD TO PANEL AFTER INSTALLATION. DC RESISTANCE SHALL NOT EXCEED 2.5 MILLIOHMS. TOUCH UP DISTURBED COATINGS AROUND MOUNTING HOLE LOCATIONS PER THE GUIDELINES IDENTIFIED IN NASA-STD-5008 PARAGRAPHS 4.4.3.8 AND 4.5.8 ALONG WITH TABLE 1. AFFIX GROUND SYMBOL LABEL (ITEM 15 ON SHEET I-069) ON PANEL EXTERIOR ADJACENT TO STUD NUTS.
9. FOR DIN RAILS CARRYING SHIELD GROUND, PERFORM THE FOLLOWING STEPS AT BOTH ENDS OF DIN RAIL TO PROVIDE BONDING PRIOR TO INSTALLATION TO THE PANEL: APPLY A THIN COAT OF GREASE (ITEM 11 ON SHEET I-069) TO FAYING SURFACES OF DIN RAIL AND PANEL PRIOR TO RAIL INSTALLATION. PERFORM DC RESISTANCE CHECK OF RAIL TO PANEL AFTER INSTALLATION. DC RESISTANCE SHALL NOT EXCEED 2.5 MILLIOHMS. AFFIX GROUND SYMBOL LABEL (ITEM 5 ON SHEET I-069) ON RAIL ADJACENT TO END FASTENERS.
10. FOR ENCLOSURE AND PANEL LABEL DETAILS, SEE SHEET I-074.
11. ENGRAVE (TYPE VII) TEXT ON PLASTIC LAMINATE REFERENCE DESIGNATION PLATE AS SHOWN ON DRAWING DETAIL PER THE PROVISIONS IN MIL-STD-792 AND THE GENERAL REQUIREMENTS (PARAGRAPH 3.1) AND QUALITY ASSURANCE PROVISIONS (PARAGRAPH 4) OF KSC-STD-E-0015.
12. LOCATE PLASTIC LAMINATE REFERENCE DESIGNATION PLATES APPROXIMATELY AS SHOWN AND ADHERE USING SILICONE ADHESIVE SEALANT CONFORMING TO MIL-A-46146, GROUP I (ITEM 35).
13. INSTALL TERMINAL BLOCK NUMBER/LETTER LABELS ON TERMINAL BLOCKS AND ID CARRIERS PER MANUFACTURERS INSTRUCTIONS. VALUES PRINTED USING MANUFACTURERS RECOMMENDED METHOD.
14. CUT CONDUCTORS TO LENGTH AT TIME OF INSTALLATION.
15. TERMINATION OF STRANDED CONDUCTORS IN CRIMP TYPE TERMINAL LUG CONNECTIONS SHALL BE IN ACCORDANCE WITH SPECIFICATION 79K22638, PARAGRAPH 3.5.1 AND NASA-STD-8739.4, PARAGRAPHS 6.6.1 AND 10.1.1 THROUGH 10.1.4.
16. FOR TERMINATION OF CONDUCTORS IN TERMINAL BLOCK CONNECTIONS, STRIP WIRE INSULATION IN ACCORDANCE WITH THE PROVISIONS OF NASA-STD-8739.4, PARAGRAPH 10.1.1 THROUGH 10.1.4. INSULATION STRIP LENGTH AND INSERTION PROCEDURE SHALL BE IN ACCORDANCE WITH TERMINAL BLOCK MANUFACTURER INSTRUCTIONS, INCLUDING VERIFICATION OF POST INSERTION CLEARANCES.
17. REMOVE AND REINSTALL CENTER POST AS REQUIRED DURING PERFORMANCE OF WORK.
18. UNLESS OTHERWISE SPECIFIED, FASTENING HARDWARE SHALL BE TORQUED OR TIGHTENED "SNUG-TIGHT" AS FOLLOWS: A MECHANIC OR TECHNICIAN SHALL TIGHTEN THE FASTENING ASSEMBLY WITH STANDARD TOOLS, USING ORDINARY FORCE, UNTIL THE ASSEMBLY LAYERS COME INTO FIRM CONTACT, DETERMINED VISUALLY BY FEEL.
19. TORQUE MIL-DTL-38999 CONNECTOR JAM NUTS IN ACCORDANCE WITH RECOMMENDED JAM NUT TORQUE VALUES FROM MIL-DTL-38999 SPECIFICATION.
20. INSTALL SAFETY WIRE (ITEM 50 ON SHEET I-069) IN ACCORDANCE WITH AIA/NAS NASM33540. MATERIAL SHALL BE PER AIA/NAS NASM20995 TYPE C (SST).
21. DURING EQUIPMENT ASSEMBLY, STORAGE AND SHIPMENT, ALL EXPOSED ELECTRICAL CONNECTOR ENDS SHALL BE PROTECTED WITH THE CONNECTOR CAPS THAT WERE INSTALLED AS PART OF CABLE HARNESS FABRICATION. REMOVE CONNECTOR CAPS PRIOR TO INSTALLATION. ALL SPARE AND UNUSED CONNECTORS SHALL BE PROTECTED USING MANUFACTURERS SUGGESTED DUST CAPS. THESE DUST CAPS SHALL BE SUPPLIED AND INSTALLED BY THE CONTRACTOR PER MANUFACTURERS INSTRUCTIONS.
22. THE CONTRACTOR SHALL INSTALL AND POT ALL CONNECTORS IN ACCORDANCE WITH MIL-DTL-38999 AND KSC-STD-132.

SYM	ZONE	DESCRIPTION	DATE	APPROVED
REVISIONS				

JACOBS™
Jacobs Technology Inc.

SIGNATURES		DATE
DRAWN	M. HENNIGH	3/07/14
CHECKED	J. WHITEFORD	3/07/14
SUBMITTED	S. RITTER	3/07/14
ST OF LICENSURE: TN LICENSE NO: 00110556		
APPROVED	G. WARD	3/07/14
	S. HUNT	3/07/14

NATIONAL AERONAUTICS AND SPACE ADMINISTRATION
JOHN F. KENNEDY SPACE CENTER, NASA
KENNEDY SPACE CENTER, FLORIDA

KSC LAUNCH PAD 39-B
ENVIRONMENTAL CONTROL SYSTEM (ECS) REFURBISHMENT
INSTRUMENTATION
REMOTE I/O PANEL 37462
GENERAL NOTES

FILE NO.	SIZE	DWG.NO.	REV
I-068	F	79K39602	
PCN. NO. 98898		SHEET 151 OF 187	

-5	-4	-3	-2	-1	ZONE	FIND NO. OR ITEM NO.	MFR CODE	PART OR STOCK NO.	DESCRIPTION	STOCK SIZE	MATERIAL SPEC	FINISH CODE	UNIT WT.
ASSY DASH NO. AND NO. REQD													
			AR			94		M5086/2-14-2	WIRE, ELECTRICAL, POLYETHYLENE INSULATED (RED)	14 AWG	MIL-DTL-16878G		
			AR			93		M5086/2-14-0	WIRE, ELECTRICAL, POLYETHYLENE INSULATED (BLACK)	14 AWG	MIL-DTL-16878G		
				4		92		CC6PB-7.5	CABLE, COAX, PLENUM MALE/MALE	7.5 FEET			
				8		91		MS51957-29	SCREW, UNC-2A #6	.038 LONG			
				8		90		MS35649-264	NUT, UNC-2B #6	.102-.114			
				8		89		MS35338-136	LOCK WASHER, #6				
			4			88	7Y971	WA-51237432	RELAY CARRIER				
				1		87		AFK1212SS	FLOOR STAND KIT, REMOTE DISTRIBUTION PANEL	12 INCH HIGH			
			AR			86		M16878/1BJE2	WIRE, ELECTRICAL, POLYETHYLENE INSULATED (RED)	16 AWG	MIL-DTL-16878G		
			AR			85		M5086/2-14-5	WIRE, ELECTRICAL, POLYETHYLENE INSULATED (GREEN)	14 AWG	MIL-DTL-16878G		
			AR	AR		84		M5086/2-8-5	WIRE, ELECTRICAL, POLYETHYLENE INSULATED (GREEN)	8 AWG	MIL-DTL-16878G		
			AR			83		M5086/2-2-0	WIRE, ELECTRICAL, POLYETHYLENE INSULATED (BLACK)	2 AWG	MIL-DTL-16878G		
			AR			82		M5086/2-2-2	WIRE, ELECTRICAL, POLYETHYLENE INSULATED (RED)	2 AWG	MIL-DTL-16878G		
						81		SPARE					
						80		SPARE					
						79		SPARE					
						78		SPARE					
			4			77	5Y407	3031563	TERMINAL BLOCK, FEED-THROUGH DIODE STTB 2,5-DIO/U-0				
						76		SPARE					
						75		SPARE					
			41			74	5Y407	3036660	END COVER D-ST 2,5-3L				
			98			73	5Y407	3036097	TERMINAL BLOCK, FEED-THROUGH MODULAR ST 2,5-PE/L/L				
						72	01121	1756-IR6I	MODULE, RTD INPUT				
			4			71	01121	1756-OF8	MODULE, ANALOG OUTPUT				
			6			70	01121	1756-OX8I	MODULE, RELAY				
			8			69	01121	1756-OB8EI	MODULE, E/P DISCRETE OUTPUT				
			4			68	01121	1756-IB16D	MODULE, DISCRETE INPUT				
			18			67	01121	1756-TBS6H	RTB (REMOVABLE TERMINAL BLOCK)				
			12			66	01121	1756-TBSH	RTB (REMOVABLE TERMINAL BLOCK)				
			2			65	01121	1756-N2	SLOT FILLER				
			8			64	01121	1756-IF6I	MODULE, ANALOG INPUT				
			2			63	01121	1756-CN2R/B	MODULE, CONTROLNET				
			4			62	5Y407	3210198	TERMINAL BLOCK, SPRING CAGE PUSH-IN CONNECTION PIT 2,5-TWIN-TG				
			2			61	56DR0	CMF555K0000BEEK	RESISTOR, 5K, 0.5W		MIL-R-39008		
			2			60	56DR0	CMF5515K000BEEK	RESISTOR, 15K, 0.5W		MIL-R-39008		
			2			59	5Y407	3211317	END COVER D-PIT 2,5-TWIN-MT				
			4			58	5Y407	3036796	P-CO COMPONENT PLUG				
						57		SPARE					
			AR	AR		56	01RP8	PS-125-2W	HEAT SHRINKABLE LABELS		MIL-DTL-23053/5 MIL-M-81531		
			4			55		AS25036-108	TERMINAL, LUG, CRIMP STYLE, COPPER, INSULATED RING TONGUE, BELL MTD.	14 AWG, 10 STUD	SAE AS 25036A		
			2			54		AS25036-115	TERMINAL, LUG, CRIMP STYLE, COPPER, INSULATED RING TONGUE, BELL MTD.	8 AWG, 10 STUD	SAE AS 25036A		
				1		53		AS25036-116	TERMINAL, LUG, CRIMP STYLE, COPPER, INSULATED RING TONGUE, BELL MTD.	8 AWG, 1/4 STUD	SAE AS 25036A		
			4			52	01121	1492-PDE1C141	POWER BLOCK, ENCLOSED				
			4			51	5Y407	2966841	RELAY BARRIER PLC-ATP-BK				
				AR		50		MS20995C32	SAFETY WIRE	0.032	A1A/NAS NASM 20995 (SST)		
						49			SPARE				
				4		48		CC6PB-5	CABLE, COAX, PLENUM MALE/MALE	5 FEET			
				8		47		C149164	ANCHOR, WASHER	.032+/-.003			
				8		46	14949	ADJ77-E1-UBJ29	FITTING, BULKHEAD, COAX TO TRIAX				
						45			SPARE				
			4			44	01121	1489-A1C100	CIRCUIT BREAKER, 10A AB-1289-CB				
			2			43	01121	1489-A1C080	CIRCUIT BREAKER, 8A AB-1289-CB				
						42		NAS1330Z3-166	NUT, BLIND RIVET - CSK HEAD, INTERNAL THREAD, NON - LOCKING	10-32 UNF-3B	ZINC PLATED STEEL		
			2			41	5Y407	3030226	CROSS CONNECTOR-BRIDGE FBS 20-5, 20 POLE				

PARTS LIST

-5	-4	-3	-2	-1	ZONE	FIND NO. OR ITEM NO.	MFR CODE	PART OR STOCK NO.	DESCRIPTION	STOCK SIZE	MATERIAL SPEC	FINISH CODE	UNIT WT.
ASSY DASH NO. AND NO. REQD													
				2		40		120E1305075-1	HARNESS ASSEMBLY J9 & J10				
			24			39	5Y407	800886	ANCHOR, SCREW E/NS35N				
				129		38		MS15795-846	WASHER, FLAT-METAL, ROUND	NO. 10	NASM15795		
				129		37		MS35338-138	WASHER, LOCK-SPRING, HELICAL	NO. 10	NASM35338		
				129		36		MS51958-65	SCREW, MACHINE-PAN HEAD	10-32 X .75	NASM51958		
			AR	AR		35	71984	3145 RTV	ADHESIVE		MIL-A-46146 GROUP 1		
			4			34	5Y407	3030190	CROSS CONNECTOR/BRIDGE FBS 5-5				
			6			33	5Y407	812120	TERMINAL MARKING, ZACK STRIP, ZB 12 UNPRINTED				
			12			32	5Y407	809735	TERMINAL MARKING, ZACK STRIP, ZBF 12 UNPRINTED				
			1			31	5Y407	3036657	END COVER D-ST 16				
			6			30	5Y407	3036165	TERMINAL BLOCK, SPRING CAGE GROUND ST 16-PE				
			4			29	5Y407	1052002	TERMINAL MARKING, ZACK STRIP, ZB 8 UNPRINTED				
			50			28	5Y407	1050004	TERMINAL MARKING, ZACK STRIP, ZB 5 UNPRINTED				
			280			27	5Y407	0818153	TERMINAL MARKING, UC-TMF 5, 960 UNPRINTED	8 STRIPS OF 12 LABELS EACH			
			4			26		M83536/10-024M	RELAY MODULE, 28 VDC		MIL-PRF-83536		
				1		25	00843	207SO	EXTERNAL GROUND KIT				
			2			24	5Y407	3030187	CROSS CONNECTOR-BRIDGE, 4 POS FBS 4-5				
						23			SPARE				
			2			22	32353	0T25F3	DISCONNECT SWITCH, 3 POLE, 25 AMP ABB-0T25F3-DISC W/ OHBS12 HANDLE				
			4			21	5Y407	3030161	CROSS CONNECTOR BRIDGE FBS 2-5, 2 POLE				
			9			20	5Y407	3030459	END COVER D-STTB 2,5				
			4			19	5Y407	3030433	END COVER D-ST 6				
						18		SPARE					
			67			17	5Y407	3031539	TERMINAL BLOCK, FEED-THROUGH MODULAR STTB 2,5-PV				
			4			16	5Y407	3031500	TERMINAL BLOCK, GROUND MODULAR ST 6-PE				
				2		15	1XUH8	5019A-K	LABEL, EARTH GROUND SYMBOL, SELF ADHESIVE				
			28			14	5Y407	3031212	TERMINAL BLOCK, FEED-THROUGH MODULAR ST 2,5				
			AR			13	01121	199-DR2	DIN RAIL	2 METERS			
			2			12	01121	1756-A17	CHASSIS, 17 SLOTS				
			AR			11	1J2MO	802311	GREASE, CERAN HVA				
			AR			10	06383	C2LG6	COVER, WIRING DUCT	2 X 72			
			AR			9	06383	F2X3LG6	WIRING DUCT	2 X 72			
			AR	AR		8	IVWQ1	422-402	ROTARY ENGRAVABLE PLASTIC	.0625 X 24 X 49			
			4			7	01121	1786-TPYS	TAP, STRAIGHT				
			2			6	01121	1756-PB75	POWER SUPPLY, PLC DC				
			10			5	1XUH8	5020A-K	LABEL, CHASSIS GROUND SYMBOL, SELF ADHESIVE				
				2		4		75M50393-2	IDENTIFICATION PLATE				
			1			3		584E0300002-4	PANEL				
				1		2		584E0300002-3	ENCLOSURE	12 X 72 X 72	316 SST		
						1		SPARE					

PARTS LIST

NOTES:

1. EQUIPMENT LIST IS BASED UPON EXISTING ECS ENCLOSURES. EQUIPMENT AND QUANTITIES ARE FOR REFERENCE ONLY. IT IS THE CONTRACTORS RESPONSIBILITY TO VERIFY ALL EQUIPMENT PART NUMBERS AND QUANTITIES DURING THE DETAILED DESIGN AND BEFORE FABRICATION.

SYM	ZONE	DESCRIPTION	DATE	APPROVED
REVISIONS				

JACOBS
Jacobs Technology Inc.

SIGNATURES		DATE
DRAWN	M. HENNIGH	3/07/14
CHECKED	J. WHITEFORD	3/07/14
SUBMITTED	S. RITTER	3/07/14
ST OF LICENSURE: TN LICENSE NO: 00110556		
APPROVED	G. WARD	3/07/14
	S. HUNT	3/07/14

NATIONAL AERONAUTICS AND SPACE ADMINISTRATION
JOHN F. KENNEDY SPACE CENTER, NASA
KENNEDY SPACE CENTER, FLORIDA

KSC LAUNCH PAD 39-B
ENVIRONMENTAL CONTROL SYSTEM (ECS) REFURBISHMENT
INSTRUMENTATION
REMOTE I/O PANEL 37462
EQUIPMENT LIST

FILE NO.	SIZE	DWG.NO.	REV
	F	79K39602	
PCN. NO. 98898		SHEET 152 OF 187	

I-069

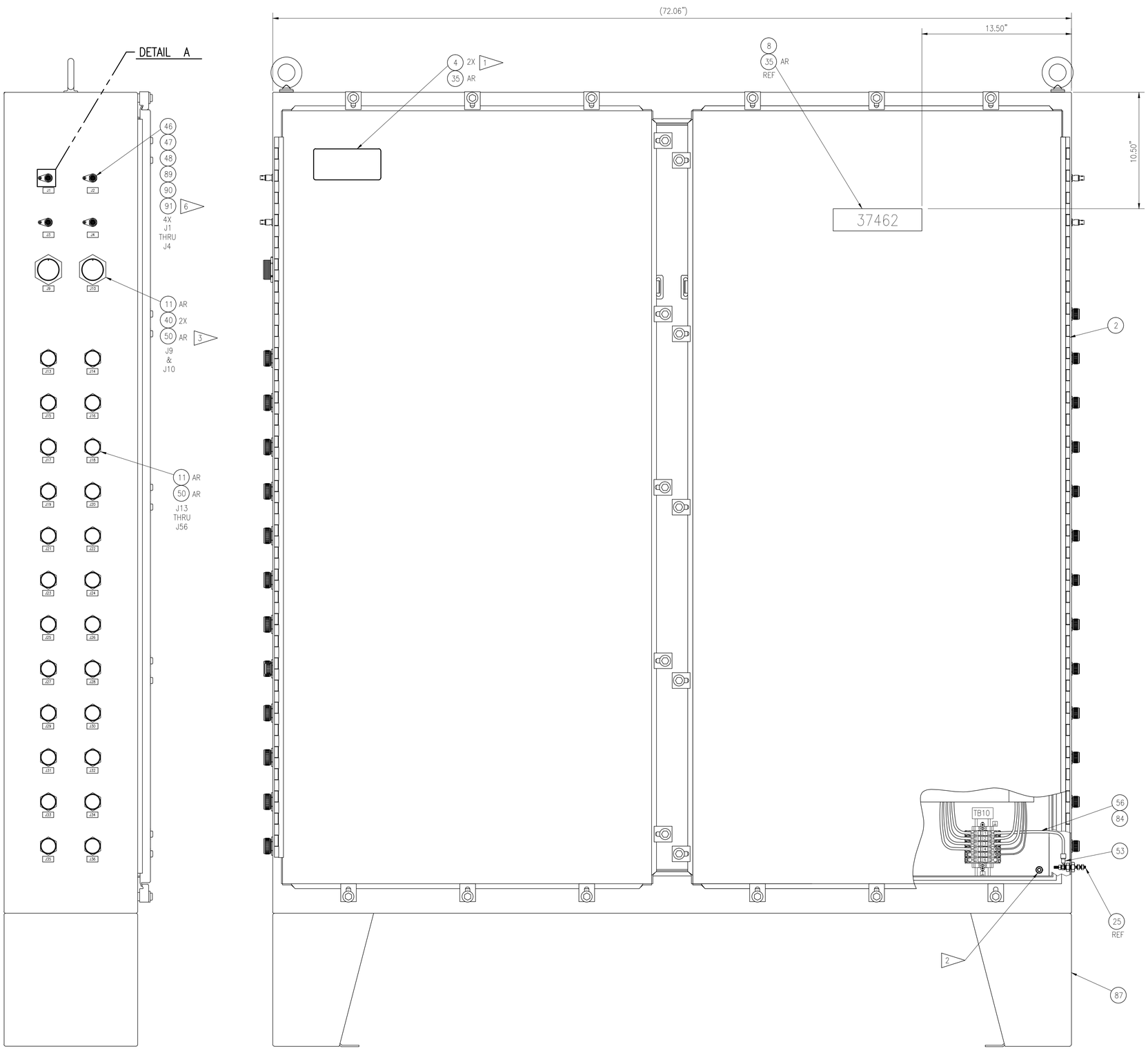

LEFT SIDE VIEW
SCALE: 1:4

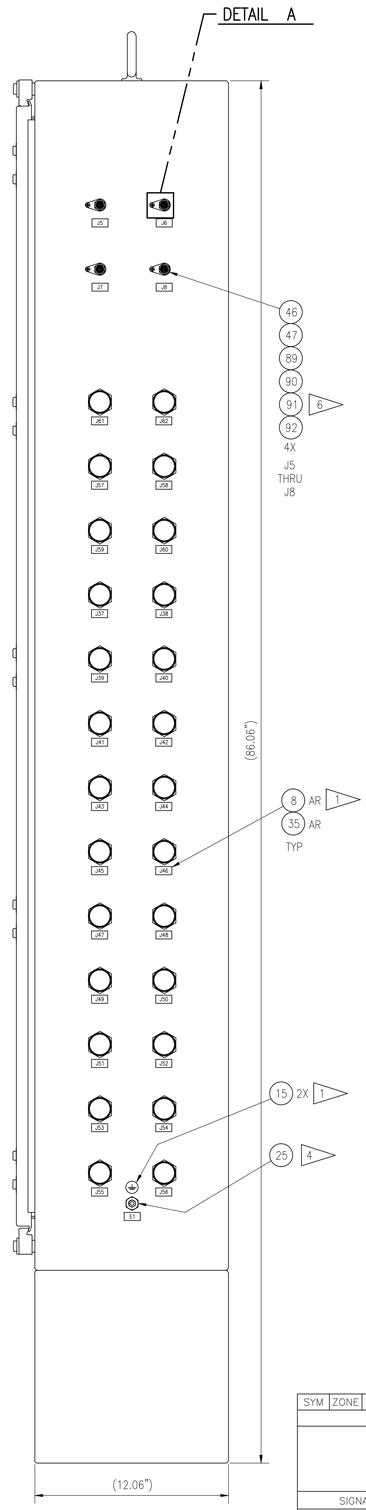

ENCLOSURE ASSEMBLY -1
SCALE: 1:4

RIGHT SIDE VIEW
SCALE: 1:4

SPECIFIC NOTES:

1. AFFIX LABELS ON BOTH THE INTERIOR AND EXTERIOR OF THE ENCLOSURE.
2. MOUNTING HARDWARE FURNISHED WITH COMPONENT BY MANUFACTURER.
3. CONNECTOR PROTECTIVE CAPS ARE NOT SHOWN.
4. INSTALL GROUNDING KIT PER MANUFACTURER'S INSTRUCTIONS.
5. TIGHTEN LOCK NUT PER PROVISIONS OF UL514B AT PARAGRAPH 6.2.1.
6. MATCH DRILL ANCHOR SCREW, (ITEM 91), USING ANCHOR WASHER, (ITEM 47), AS TEMPLATE.
7. TORQUE CONNECTOR JAM NUT IN ACCORDANCE WITH TABLE 1 FROM SPECIFICATION SAE ARP 1350.
8. LABEL EACH HARNESS WITH ASSOCIATED J/W NUMBER (J1 = W101, J2 = W102, ETC) WITHIN 2" ± 1" OF RECEPTACLE AT TIME OF INSTALLATION. LABEL TO CONSIST OF 2 LINES WITH LINE 1 AS THE HARNESS NUMBER (EX. W101) AND LINE 2 AS THE COMPONENT 2 COLUMN. MARKER TAPE SHALL MEET THE PROVISION OF 75M11300-1.
9. TWIST PAIR CABLES SHALL HAVE A MINIMUM OF 1 TWIST PER 1.50" FOR WIRE GAUGES 14-18.
10. REFERENCE SHEETS I-066 AND I-067 FOR CONNECTOR AND CABLE HARNESS INFORMATION.

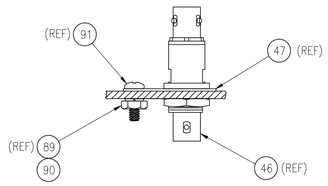

DETAIL A
SCALE: NONE

SYM	ZONE	DESCRIPTION	DATE	APPROVED
REVISIONS				

JACOBS
Jacobs Technology Inc.

SIGNATURES		DATE
DRAWN	M. HENNIGH	3/07/14
CHECKED	J. WHITEFORD	3/07/14
SUBMITTED	S. RITTER	3/07/14
ST OF LICENSURE: TN LICENSE NO: 00110556		
APPROVED	G. WARD	3/07/14
	S. HUNT	3/07/14

NATIONAL AERONAUTICS AND SPACE ADMINISTRATION
JOHN F. KENNEDY SPACE CENTER, NASA
KENNEDY SPACE CENTER, FLORIDA

KSC LAUNCH PAD 39-B
ENVIRONMENTAL CONTROL SYSTEM (ECS) REFURBISHMENT
INSTRUMENTATION
REMOTE I/O PANEL 37462
ENCLOSURE ASSEMBLY

FILE NO.	SIZE	DWG.NO.	REV
	F	79K39602	
PCN. NO. 98898		SHEET 153 OF 187	

I-070

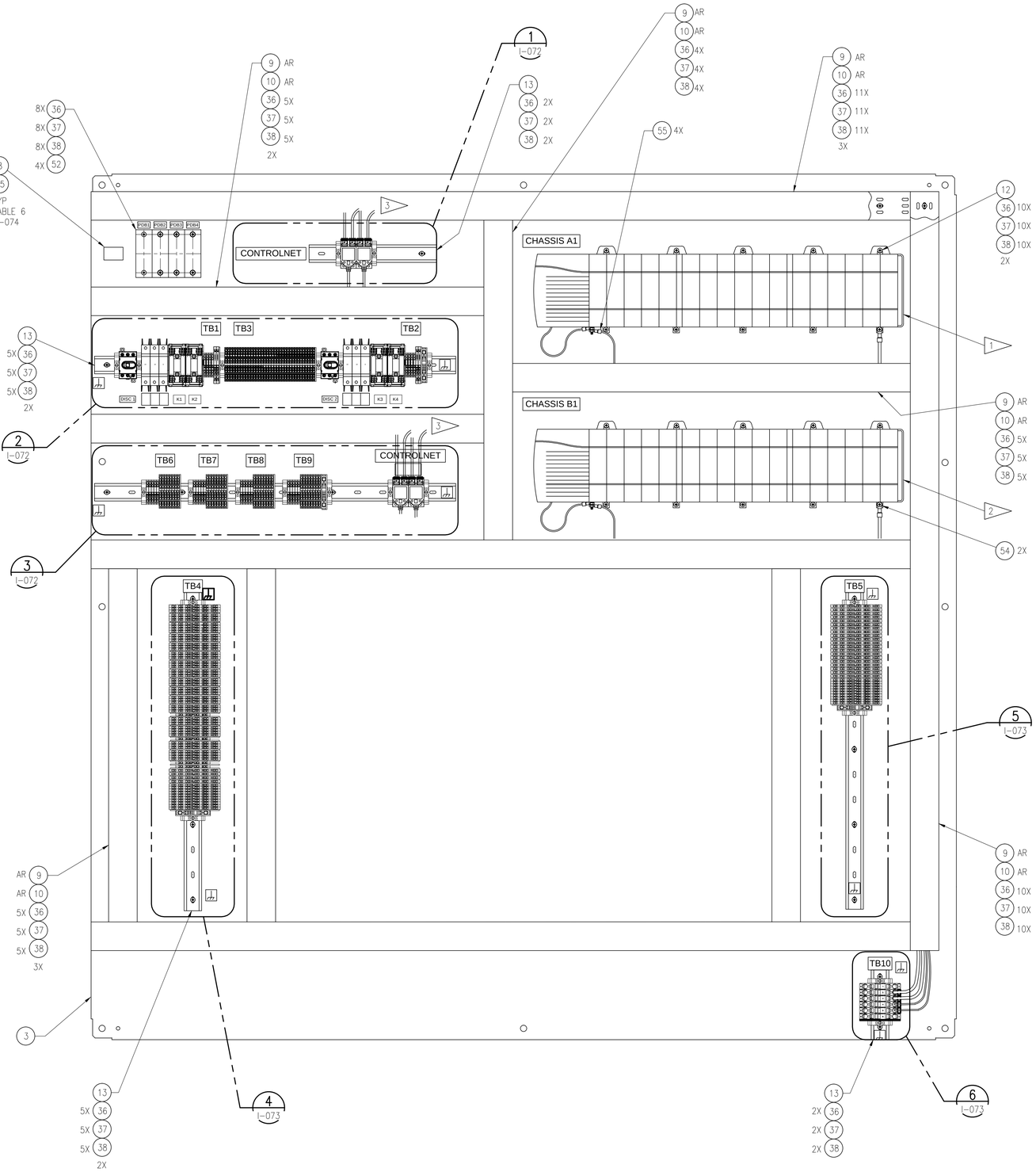

1 PANEL ASSEMBLY -2
SCALE: 1:4

SPECIFIC NOTES:

1. FOR INSTALLATION OF COMPONENTS, SEE TABLE 1.
2. FOR INSTALLATION OF COMPONENTS, SEE TABLE 2.
3. FOR INSTALLATION OF CABLES, SEE SHEET 75.

TABLE 1
CHASSIS A1 SLOT ASSIGNMENT

SLOT NO.	DESCRIPTION	PART NO. (REF ONLY)	RTB PART NO.
N/A	PLC DC POWER SUPPLY	1756-PB75	–
0	CONTROLNET MODULE	1756-CN2R	–
1	SLOT FILLER	1756-N2	–
2	ANALOG INPUT MODULE	1756-IF6I	1756-TBSH
3	ANALOG INPUT MODULE	1756-IF6I	1756-TBSH
4	ANALOG INPUT MODULE	1756-IF6I	1756-TBSH
5	ANALOG INPUT MODULE	1756-IF6I	1756-TBSH
6	ANALOG OUTPUT MODULE	1756-OF8	1756-TBSH
7	ANALOG OUTPUT MODULE	1756-OF8	1756-TBSH
8	DISCRETE INPUT MODULE	1756-IB16D	1756-TBS6H
9	DISCRETE INPUT MODULE	1756-IB16D	1756-TBS6H
10	RELAY MODULE	1756-OX8I	1756-TBS6H
11	RELAY MODULE	1756-OX8I	1756-TBS6H
12	RELAY MODULE	1756-OX8I	1756-TBS6H
13	DISCRETE OUTPUT	1756-OB8EI	1756-TBS6H
14	DISCRETE OUTPUT	1756-OB8EI	1756-TBS6H
15	DISCRETE OUTPUT	1756-OB8EI	1756-TBS6H
16	RELAY MODULE	1756-OX8I	1756-TBS6H

TABLE 2
CHASSIS B1 SLOT ASSIGNMENT

SLOT NO.	DESCRIPTION	PART NO. (REF ONLY)	RTB PART NO.
N/A	PLC DC POWER SUPPLY	1756-PB75	–
0	CONTROLNET MODULE	1756-CN2R	–
1	SLOT FILLER	1756-N2	–
2	ANALOG INPUT MODULE	1756-IF6I	1756-TBSH
3	ANALOG INPUT MODULE	1756-IF6I	1756-TBSH
4	ANALOG INPUT MODULE	1756-IF6I	1756-TBSH
5	ANALOG INPUT MODULE	1756-IF6I	1756-TBSH
6	ANALOG OUTPUT MODULE	1756-OF8	1756-TBSH
7	ANALOG OUTPUT MODULE	1756-OF8	1756-TBSH
8	DISCRETE INPUT MODULE	1756-IB16D	1756-TBS6H
9	DISCRETE INPUT MODULE	1756-IB16D	1756-TBS6H
10	RELAY MODULE	1756-OX8I	1756-TBS6H
11	RELAY MODULE	1756-OX8I	1756-TBS6H
12	RELAY MODULE	1756-OX8I	1756-TBS6H
13	DISCRETE OUTPUT	1756-OB8EI	1756-TBS6H
14	DISCRETE OUTPUT	1756-OB8EI	1756-TBS6H
15	DISCRETE OUTPUT	1756-OB8EI	1756-TBS6H
16	RELAY MODULE	1756-OX8I	1756-TBS6H

SYM	ZONE	DESCRIPTION	DATE	APPROVED
REVISIONS				

JACOBS
Jacobs Technology Inc.

SIGNATURES		DATE
DRAWN	M. HENNIGH	3/07/14
CHECKED	J. WHITEFORD	3/07/14
SUBMITTED	S. RITTER	3/07/14
ST OF LICENSURE: TN LICENSE NO: 00110556		
APPROVED	G. WARD	3/07/14
	S. HUNT	3/07/14

NATIONAL AERONAUTICS AND SPACE ADMINISTRATION
JOHN F. KENNEDY SPACE CENTER, NASA
KENNEDY SPACE CENTER, FLORIDA

KSC LAUNCH PAD 39-B
ENVIRONMENTAL CONTROL SYSTEM (ECS) REFURBISHMENT
INSTRUMENTATION
REMOTE I/O PANEL 37462
PANEL ASSEMBLY

FILE NO.	SIZE	DWG.NO.	REV
I-071	F	79K39602	
PCN. NO. 98898		SHEET 154 OF 187	

SPECIFIC NOTES:

1. NOMENCLATURE HAND PRINTED ON MARKER CARRIER OR WHERE APPROPRIATE.
2. FIELD ROUTE COAX PIGTAIL OF ITEM 7 THROUGH WIRE DUCT AND MATE TO CONTROLNET MODULE INDICATED BY NOMENCLATURE. REFER TO CONTROLNET TAP CONNECTION DIAGRAM ON SHEET I-075 AS AN EXAMPLE.
3. TERMINAL BLOCK QUANTITIES, LOCATIONS, AND DIMENSIONS SHOWN ARE APPROXIMATE AND SHALL BE ADJUSTED BY CONTRACTOR AS REQUIRED.

CONTROLNET

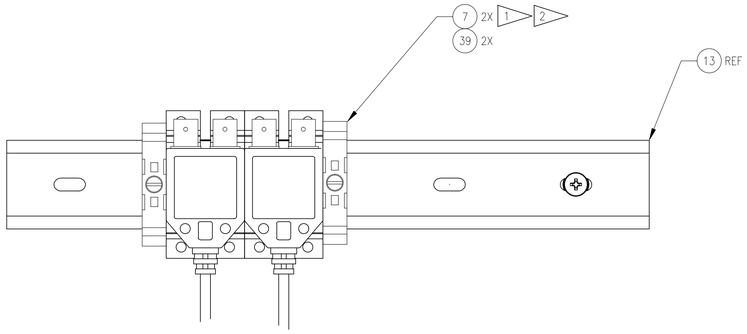

DETAIL 1 / I-071
SCALE: 1:1

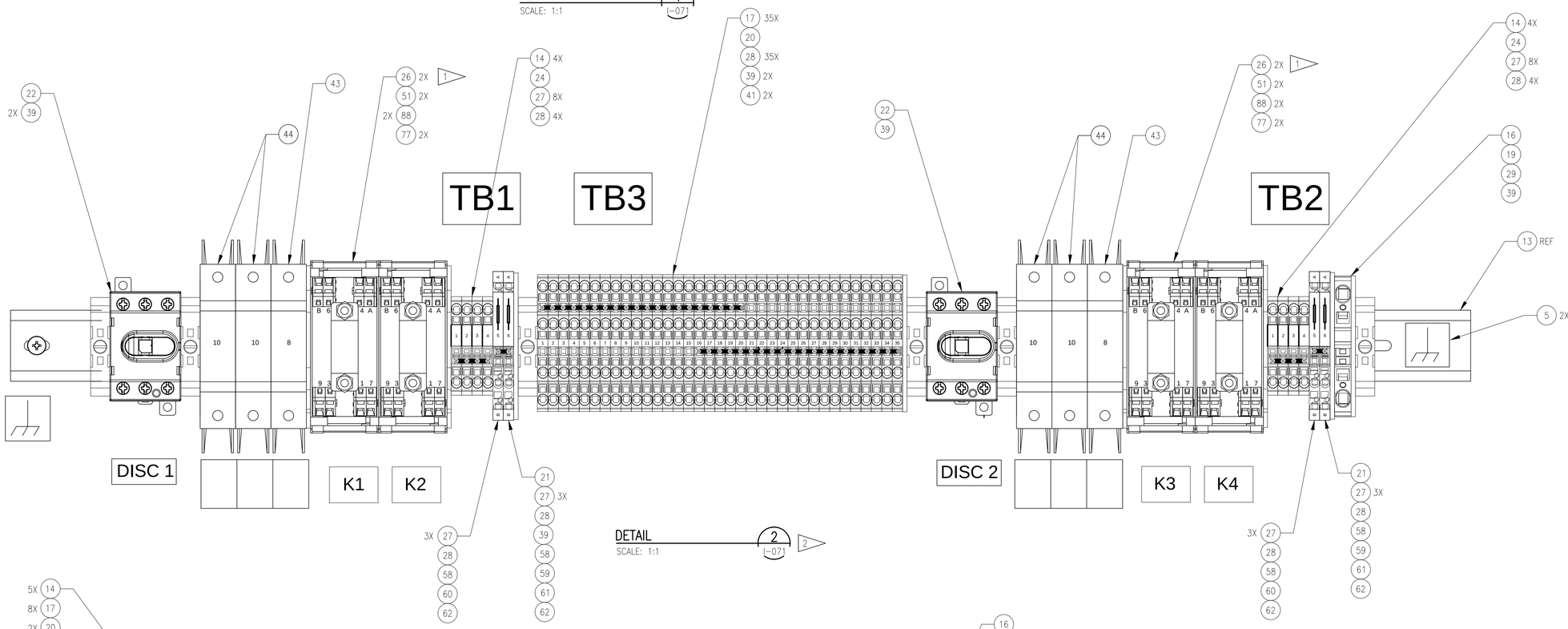

DETAIL 2 / I-071
SCALE: 1:1

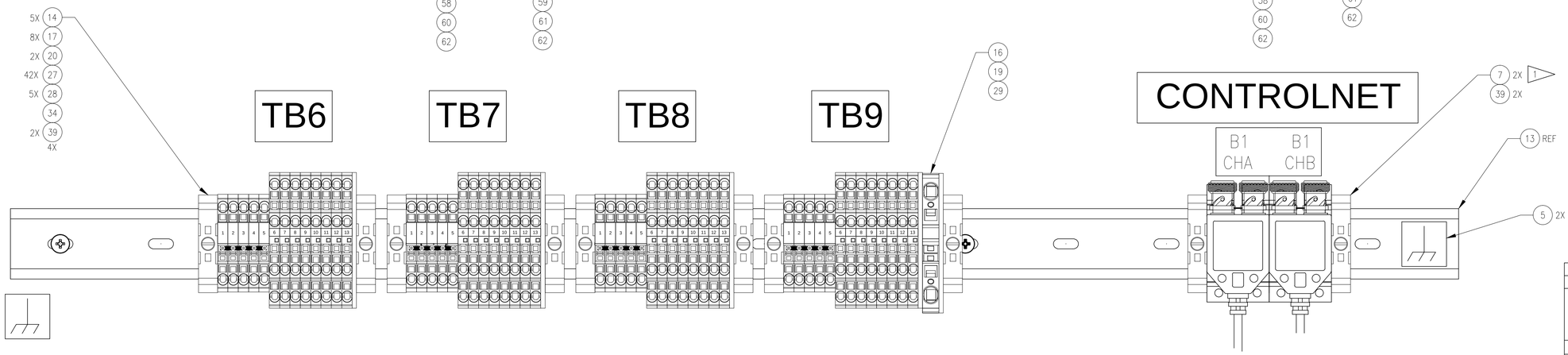

DETAIL 3 / I-071
SCALE: 1:1

SYM	ZONE	DESCRIPTION	DATE	APPROVED
REVISIONS				

JACOBS
Jacobs Technology Inc.

SIGNATURES		DATE
DRAWN	M. HENNIGH	3/07/14
CHECKED	J. WHITEFORD	3/07/14
SUBMITTED	S. RITTER	3/07/14
ST OF LICENSURE: TN LICENSE NO: 00110556		
APPROVED	G. WARD	3/07/14
	S. HUNT	3/07/14

NATIONAL AERONAUTICS AND SPACE ADMINISTRATION
JOHN F. KENNEDY SPACE CENTER, NASA
KENNEDY SPACE CENTER, FLORIDA

KSC LAUNCH PAD 39-B
ENVIRONMENTAL CONTROL SYSTEM (ECS) REFURBISHMENT
INSTRUMENTATION
REMOTE I/O PANEL 37462
COMPONENT DETAILS SHEET 1

FILE NO.	SIZE	DWG.NO.	REV
	F	79K39602	
PCN. NO. 98898		SHEET 155 OF 187	

I-072

SPECIFIC NOTES:

1. NOMENCLATURE HAND PRINTED ON MARKER CARRIER OR WHERE APPROPRIATE.
2. TERMINAL BLOCK QUANTITIES, LOCATIONS, AND DIMENSIONS SHOWN ARE APPROXIMATE AND SHALL BE ADJUSTED BY CONTRACTOR AS REQUIRED.

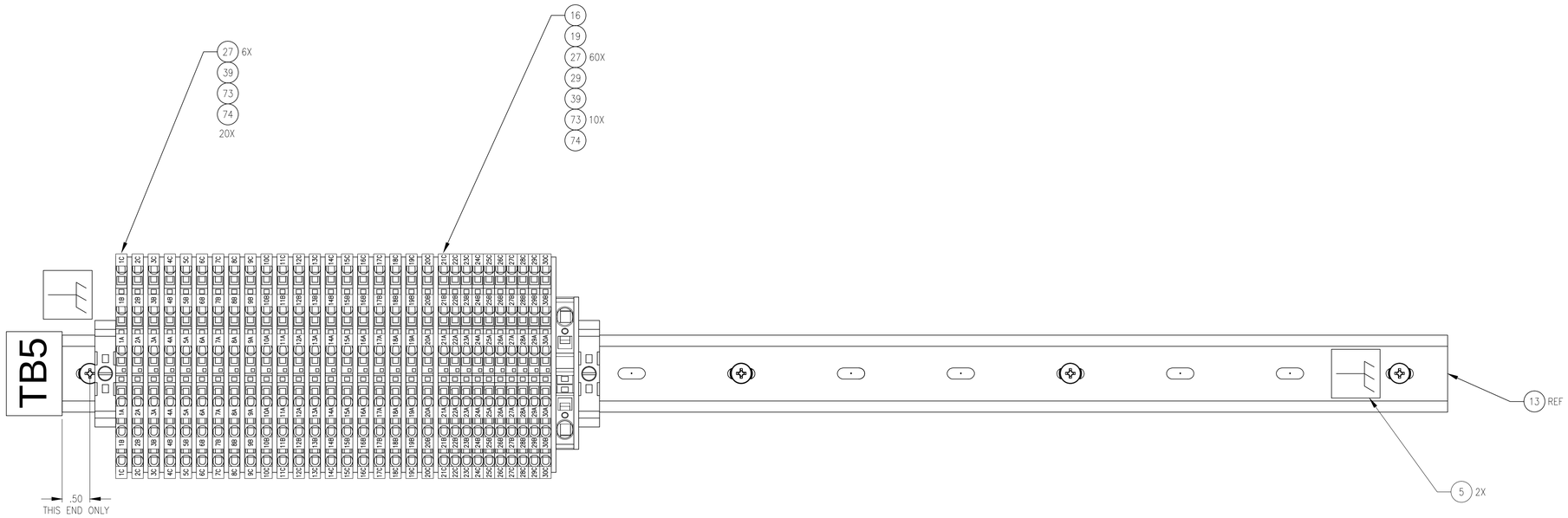

DETAIL 5 / I-071
SCALE: 1:1

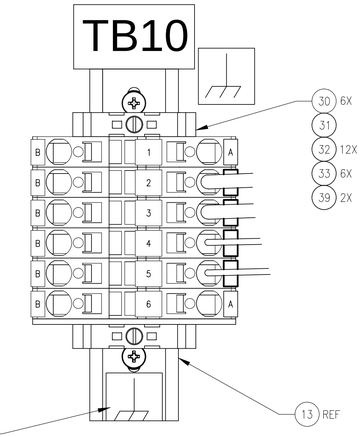

DETAIL 6 / I-071
SCALE: 1:1

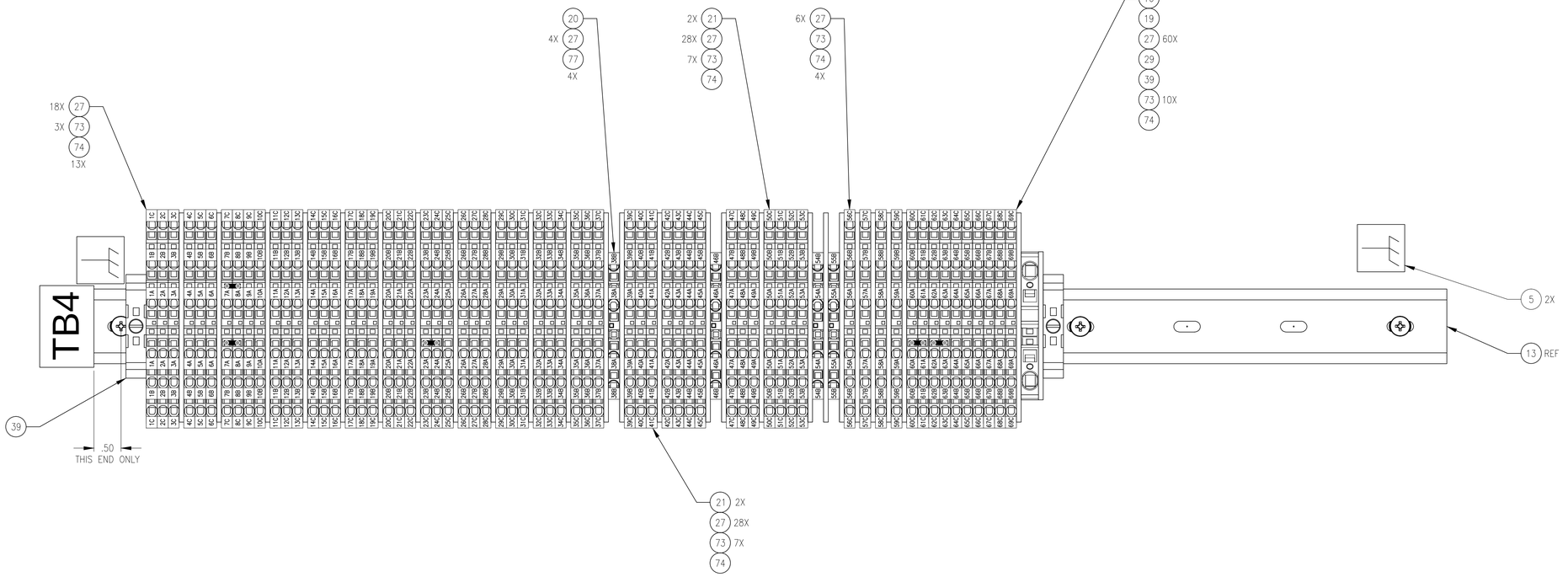

DETAIL 4 / I-071
SCALE: 1:1

SYM	ZONE	DESCRIPTION	DATE	APPROVED
		REVISIONS		

JACOBS
Jacobs Technology Inc.

SIGNATURES		DATE
DRAWN	M. HENNIGH	3/07/14
CHECKED	J. WHITEFORD	3/07/14
SUBMITTED	S. RITTER	3/07/14
ST OF LICENSURE: TN LICENSE NO: 00110556		
APPROVED	G. WARD	3/07/14
	S. HUNT	3/07/14

NATIONAL AERONAUTICS AND SPACE ADMINISTRATION
JOHN F. KENNEDY SPACE CENTER, NASA
KENNEDY SPACE CENTER, FLORIDA

KSC LAUNCH PAD 39-B
ENVIRONMENTAL CONTROL SYSTEM (ECS) REFURBISHMENT
INSTRUMENTATION
REMOTE I/O PANEL 37462
COMPONENT DETAILS SHEET 2

FILE NO.	SIZE	DWG.NO.	REV
	F	79K39602	
PCN. NO. 98898		SHEET 156 OF 187	

I-073

TABLE 5 ENCLOSURE LABELS			
A WIDTH	B HEIGHT	C TEXT HEIGHT	NOMENCLATURE
1.00	.50	.25	J1
1.00	.50	.25	J2
1.00	.50	.25	J3
1.00	.50	.25	J4
1.00	.50	.25	J5
1.00	.50	.25	J6
1.00	.50	.25	J7
1.00	.50	.25	J8
1.00	.50	.25	J9
1.00	.50	.25	J10
1.00	.50	.25	J13
1.00	.50	.25	J14
1.00	.50	.25	J15
1.00	.50	.25	J16
1.00	.50	.25	J17
1.00	.50	.25	J18
1.00	.50	.25	J19
1.00	.50	.25	J20
1.00	.50	.25	J21
1.00	.50	.25	J22
1.00	.50	.25	J23
1.00	.50	.25	J24
1.00	.50	.25	J25
1.00	.50	.25	J26
1.00	.50	.25	J27
1.00	.50	.25	J28
1.00	.50	.25	J29
1.00	.50	.25	J30
1.00	.50	.25	J31
1.00	.50	.25	J32
1.00	.50	.25	J33
1.00	.50	.25	J34
1.00	.50	.25	J35
1.00	.50	.25	J36
1.00	.50	.25	J37
1.00	.50	.25	J38
1.00	.50	.25	J39
1.00	.50	.25	J40
1.00	.50	.25	J41
1.00	.50	.25	J42
1.00	.50	.25	J43
1.00	.50	.25	J44
1.00	.50	.25	J45
1.00	.50	.25	J46
1.00	.50	.25	J47
1.00	.50	.25	J48
1.00	.50	.25	J49
1.00	.50	.25	J50
1.00	.50	.25	J51
1.00	.50	.25	J52
1.00	.50	.25	J53
1.00	.50	.25	J54
1.00	.50	.25	J55
1.00	.50	.25	J56
1.00	.50	.25	E1
8.00	2.00	1.00	35423

TABLE 6 PANEL LABELS			
A WIDTH	B HEIGHT	C TEXT HEIGHT	NOMENCLATURE
1.50	1.00	.50	GSP
1.00	.50	.25	PDB1
1.00	.50	.25	PDB2
1.00	.50	.25	PDB3
1.00	.50	.25	PDB4
5.50	1.00	.50	CONTROLNET
4.50	1.00	.50	CHASSIS A1
1.50	1.00	.50	TB1
1.50	1.00	.50	TB3
1.50	1.00	.50	TB2
1.25	.50	.25	DISC 1
.47	1.00	.25	CB 1
.47	1.00	.25	CB 2
.47	1.00	.25	CB 3
1.25	.50	.25	DISC 2
.47	1.00	.25	CB 4
.47	1.00	.25	CB 5
.47	1.00	.25	CB 6
4.50	1.00	.50	CHASSIS B1
1.50	1.00	.50	TB6
1.50	1.00	.50	TB7
1.50	1.00	.50	TB8
1.50	1.00	.50	TB9
1.50	1.00	.50	TB4
1.50	1.00	.50	TB5
1.88	1.00	.50	TB10
.47	1.00	.25	K1
.47	1.00	.25	K2
.47	1.00	.25	K3
.47	1.00	.25	K4
3.25	1.00	.25	A1 CHA / A1 CHB
3.25	1.00	.25	B1 CHA / B1 CHB

TABLE 7 IDENTIFICATION PLATE ENTRY MATRIX	
DESCRIPTION	NOMENCLATURE
1.00	REMOTE I/O CABINET
NASA PN	9
MFR PN	1 2
REF DES	37462
ACCEPT DATE	1 FORM: MM YYYY
CONTR NO.	3
WT LBS	870 LBS 1
SERIAL NO.	3
MODEL NO.	9
OFFICE SYMBOL	9
BY	1

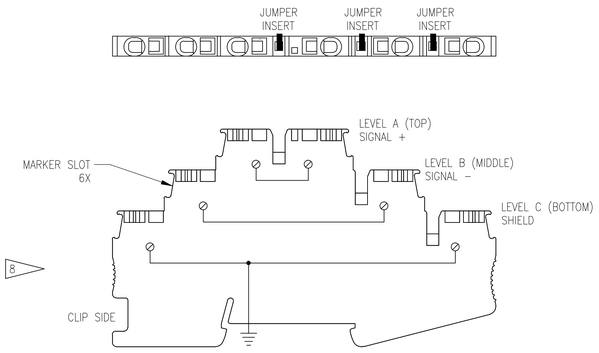

ST 2,5–PE/L/L 4
(INCLUDED ON TB4 & 5)

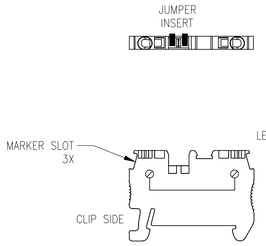

ST 2,5
(INCLUDED ON TB1, 2, 6, 7, 8 & 9)

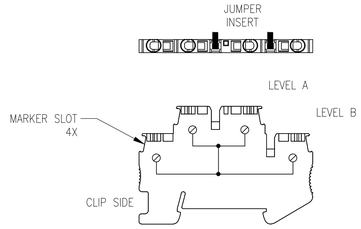

STTB 2,5 – PV
(INCLUDED ON TB3, 6, 7, 8 & 9)

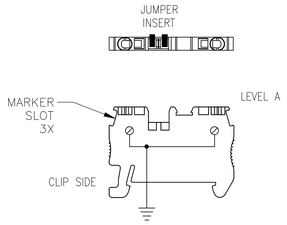

ST 6–PE 4
(INCLUDED ON TB2, 4, 5 & 9)

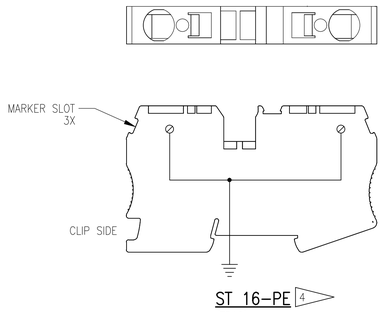

ST 16–PE 4
(TB10)

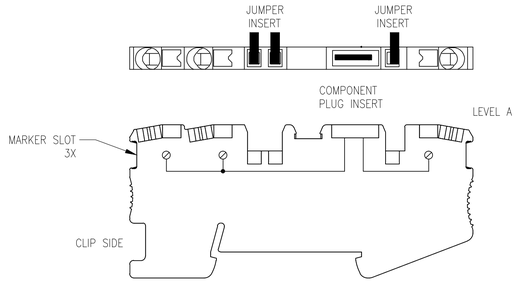

DT 2,5–TWIN–TG
(INCLUDED ON TB1 & 2)

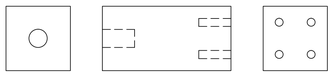

PDB
(ALL TERMINAL #1, 1–#2 IN, 4–#16 OUT)

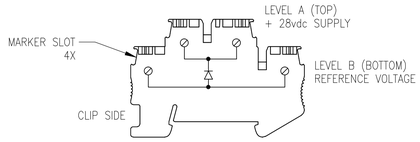

STTB 2,5 DIO/U–O
(INCLUDED ON TB4)

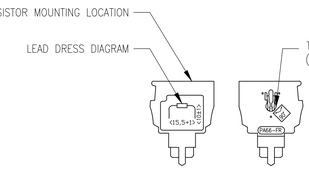

P–CO (COMPONENT CONNECTOR) 6
(REF)

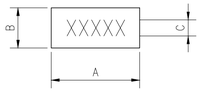

8 TYPICAL SINGLE LINE LABEL DETAIL 7

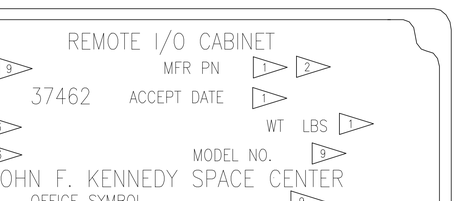

SHOWN FOR REFERENCE ONLY

4 IDENTIFICATION PLATE 3

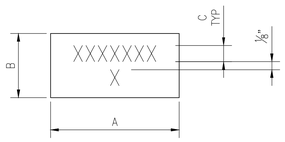

8 TYPICAL TWO LINE LABEL DETAIL 7

SPECIFIC NOTES:

1. INFORMATION TO BE SUPPLIED BY FABRICATING CONTRACTOR.
2. USE N/A FOR INFORMATION NOT USED / NOT APPLICABLE.
3. INFORMATION TO BE SUPPLIED BY CONTRACTING OFFICER, AS APPLICABLE.
4. TERMINAL BLOCK SHALL PROVIDE CONDUCTOR CONNECTION TO DIN RAIL.
5. TERMINAL BLOCK CONNECTIONS SHALL BE DESIGNATED A, B, C ONLY AS SHOWN.
6. FOR INSTALLATION OF RESISTOR IN COMPONENT CONNECTOR, FORM LEADS TO DIMENSIONS SHOWN ON HOUSING, THEN INSERT RESISTOR INTO MOUNTING CAVITY ON TOP OF CONNECTOR BODY WHILE HOLDING OPEN INTERNAL SPRING CLAMPS BY TWISTING INSTALLATION TOOL IN MARKED SLOT ON SIDE PANEL.
7. CENTER TEXT HORIZONTALLY AND VERTICALLY.
8. CONTROLNET LABEL QUANTITY IS 2.
9. INFORMATION TO BE SUPPLIED BY NASA.

SYM	ZONE	DESCRIPTION	DATE	APPROVED
REVISIONS				

JACOBS
Jacobs Technology Inc.

SIGNATURES		DATE
DRAWN	M. HENNIGH	3/07/14
CHECKED	J. WHITEFORD	3/07/14
SUBMITTED	S. RITTER	3/07/14
ST OF LICENSURE: TN LICENSE NO: 00110556		
APPROVED	G. WARD	3/07/14
	S. HUNT	3/07/14

NATIONAL AERONAUTICS AND SPACE ADMINISTRATION
JOHN F. KENNEDY SPACE CENTER, NASA
KENNEDY SPACE CENTER, FLORIDA

KSC LAUNCH PAD 39-B
ENVIRONMENTAL CONTROL SYSTEM (ECS) REFURBISHMENT
INSTRUMENTATION
REMOTE I/O PANEL 37462
TERMINAL BLOCK DETAILS

FILE NO.	SIZE	DWG.NO.	REV
	F	79K39602	
PCN. NO. 98898		SHEET 157 OF 187	

I-074

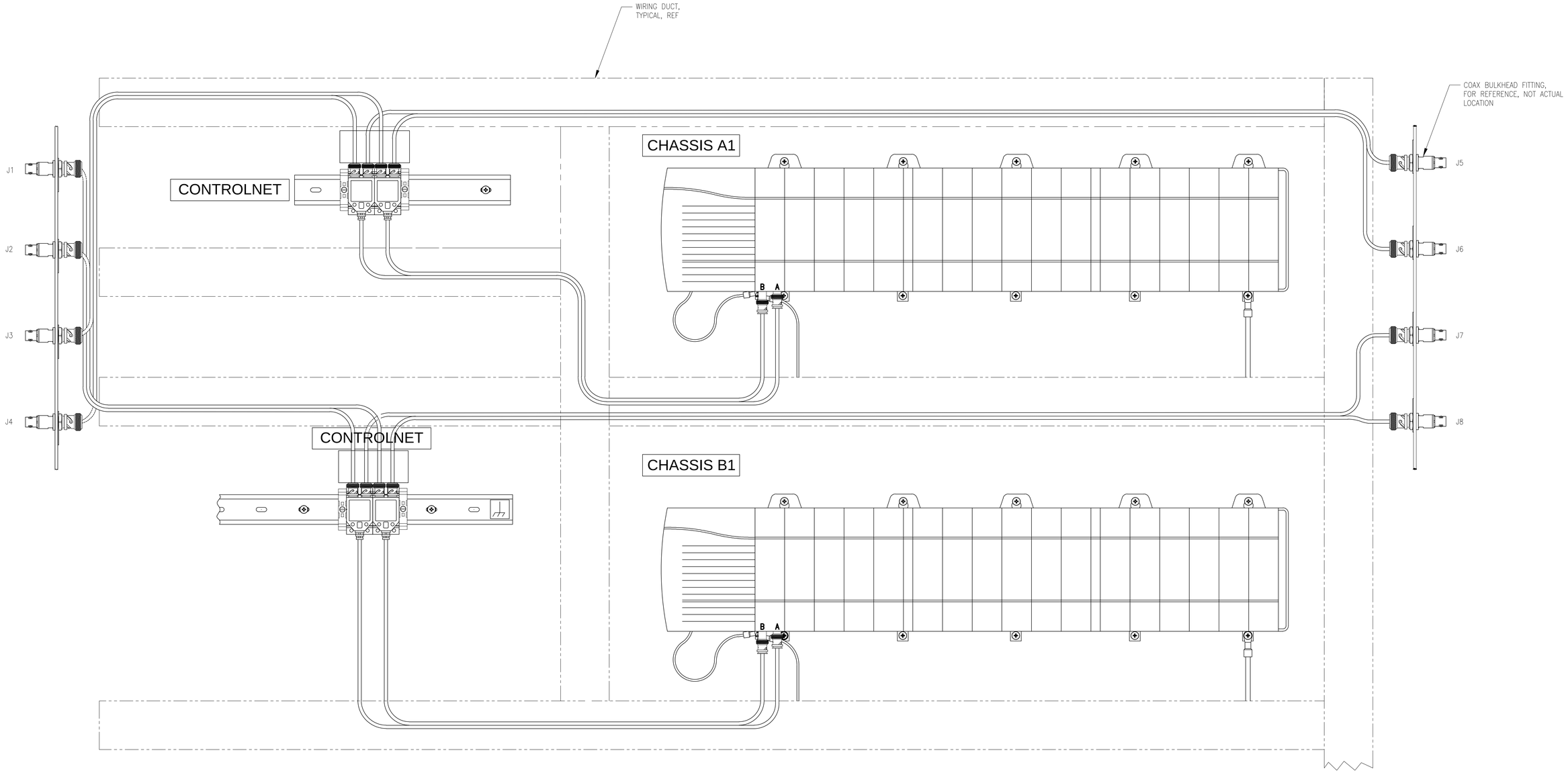

CONTROLNET TAP CONNECTION DIAGRAM

SYM	ZONE	DESCRIPTION	DATE	APPROVED
REVISIONS				

JACOBS
Jacobs Technology Inc.

SIGNATURES		DATE
DRAWN	M. HENNIGH	3/07/14
CHECKED	J. WHITEFORD	3/07/14
SUBMITTED	S. RITTER	3/07/14
ST OF LICENSURE: TN LICENSE NO: 00110556		
APPROVED	G. WARD	3/07/14
	S. HUNT	3/07/14

NATIONAL AERONAUTICS AND SPACE ADMINISTRATION
JOHN F. KENNEDY SPACE CENTER, NASA
KENNEDY SPACE CENTER, FLORIDA

KSC LAUNCH PAD 39-B
ENVIRONMENTAL CONTROL SYSTEM (ECS) REFURBISHMENT
INSTRUMENTATION
REMOTE I/O PANEL 37462
CONTROL NET DETAILS

FILE NO.	SIZE	DWG.NO.	REV
	F	79K39602	

PCN. NO. 98898 SHEET 158 OF 187

I-075

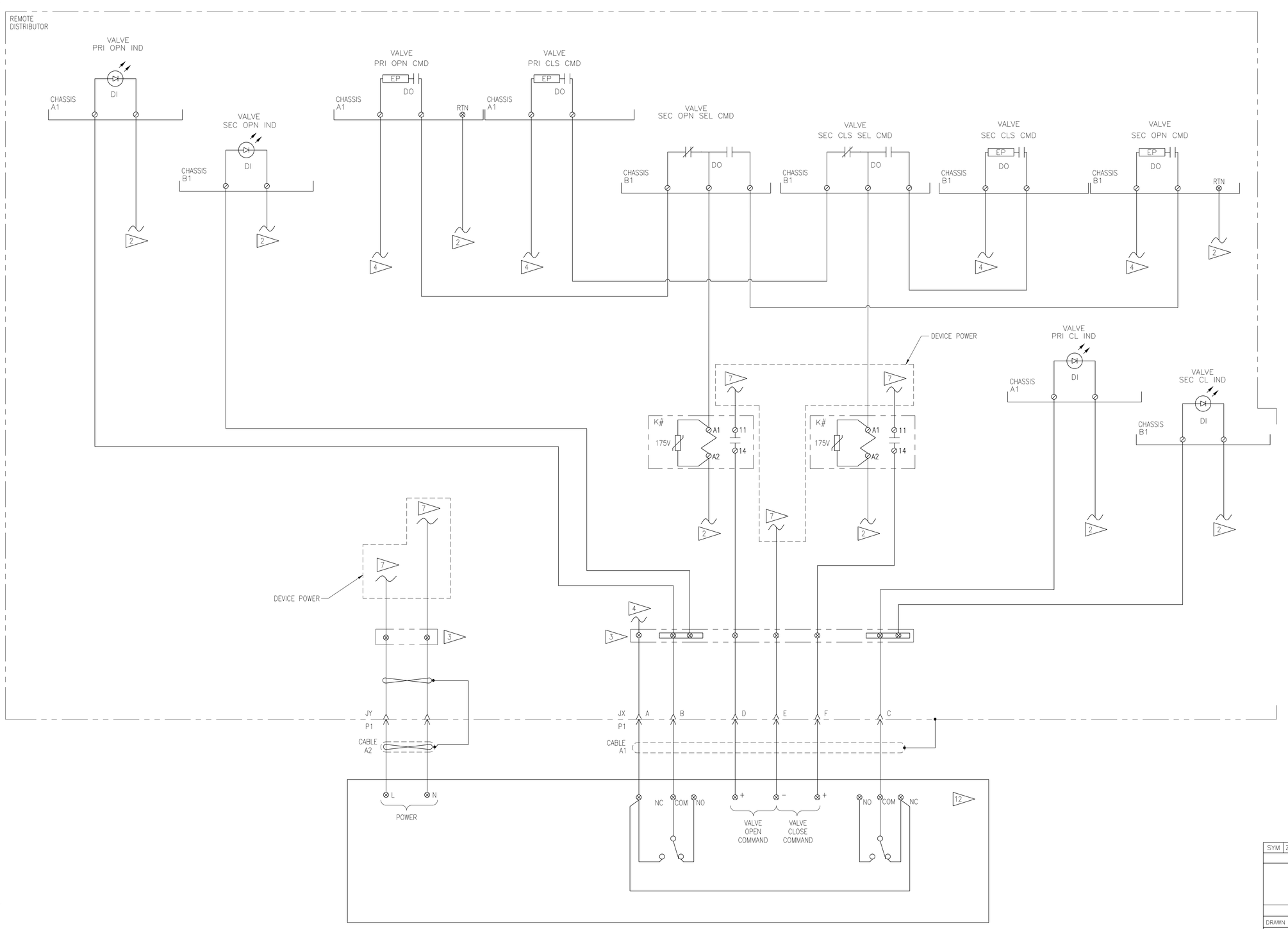

NOTES:

1. THIS SCHEMATIC IS TO BE USED IN CONJUNCTION WITH THE PLC AND REMOTE DISTRIBUTOR TAG INDEX TABLES. WIRING TERMINATIONS AND INTERFACE CONNECTOR ASSIGNMENTS ARE DEFINED IN THE REMOTE DISTRIBUTION CABINET TAG INDEX TABLES.

2. TO POWER RETURN/NEUTRAL LOCATED IN REMOTE DISTRIBUTOR ENCLOSURE.

3. CONTRACTOR SHALL USE EXISTING FIELD INTERFACE TERMINAL BLOCKS TO CONNECT PLC CHANNEL I/O TO THE REMOTE DISTRIBUTION ENCLOSURES INTERFACE CONNECTORS. IF ADDITIONAL TERMINAL BLOCKS ARE REQUIRED THE CONTRACTOR SHALL PROVIDE AND INSTALL.

4. TO SIGNAL/CONTROL POWER SOURCE BUS LOCATED IN REMOTE DISTRIBUTOR ENCLOSURE.

5. THIS SCHEMATIC SHALL BE USED FOR THE FOLLOWING DEVICES:
   - MOV-008
   - MOV-011
   - MOV-012
   - MOV-013

6. FOR THE SINGLE FAULT TOLERANCE REQUIRED BY NASA. THE SINGLE 110VAC CONFIGURATION VALVE SHALL BE WIRED SO THAT:
   - EITHER SYSTEM A OR SYSTEM B CAN HAVE FULL CONTROL OVER THE VALVE
   - BOTH SYSTEM A AND SYSTEM B RECEIVE THE VALVE FULL OPEN AND FULL CLOSE FEEDBACKS
   - ON A SYSTEM A OR B PLC FAULT CONTROL OF THE VALVE WILL AUTOMATICALLY SWITCH TO THE UN-FAULTED SYSTEM

7. REFERENCE SHEET I-024 FOR DEVICE POWER SUPPLY CIRCUIT AND/OR POWER CONNECTION DETAILS.

8. CONTRACTOR SHALL USE EXISTING ISOLATION RELAYS LOCATED IN THE REMOTE DISTRIBUTION ENCLOSURE. IF MORE ISOLATION RELAYS ARE REQUIRED, CONTRACTOR SHALL SUPPLY AND INSTALL THESE RELAYS.

9. FOR THIS TYPE OF CONTROL VALVE THE CONTRACTOR SHALL BE RESPONSIBLE FOR PROGRAMMING THE CONTROL SUCH THAT THE OPEN AND CLOSE SIGNALS FROM THE PLC ARE NEVER ON AT THE SAME TIME.

10. FOR THIS TYPE OF CONTROL VALVE THE CONTRACTOR SHALL BE RESPONSIBLE FOR PROGRAMMING THE OPEN AND CLOSE COMMANDS SO THAT ONCE A FULL OPEN OR FULL CLOSE LIMIT SWITCH IS REACHED THE RESPECTIVE OPEN OR CLOSE COMMAND FROM THE PLC IS SHUT OFF. (POWER TO THE VALVE MOTOR SHALL BE SHUT OFF ONCE A VALVE LIMIT HAS BEEN REACHED)

11. THE VALVE SCHEMATIC SHOWN DETAILS SYSTEM A AS PRIMARY. FOR VALVES WHERE SYSTEM B IS THE PRIMARY SWAP ALL OCCURRENCES OF A1 WITH B1 AND B1 WITH A1.

12. ACTUAL VALVE WIRING SHALL DEPEND ON TYPE OF MOTORIZED ACTUATOR SELECTED.

SYM	ZONE	DESCRIPTION	DATE	APPROVED

REVISIONS

JACOBS
Jacobs Technology Inc.

SIGNATURES		DATE
DRAWN	M. HENNIGH	3/07/14
CHECKED	J. WHITEFORD	3/07/14
SUBMITTED	S. RITTER	3/07/14
ST OF LICENSURE: TN LICENSE NO: 00110556		
APPROVED	G. WARD	3/07/14
	S. HUNT	3/07/14

NATIONAL AERONAUTICS AND SPACE ADMINISTRATION
JOHN F. KENNEDY SPACE CENTER, NASA
KENNEDY SPACE CENTER, FLORIDA

KSC LAUNCH PAD 39-B
ENVIRONMENTAL CONTROL SYSTEM (ECS) REFURBISHMENT
INSTRUMENTATION
GENERAL 110VAC
SINGLE CONTROL VALVE SCHEMATIC

FILE NO. | SIZE F | DWG.NO. 79K39602 | REV
PCN. NO. 98898 | SHEET 159 OF 187

I-076

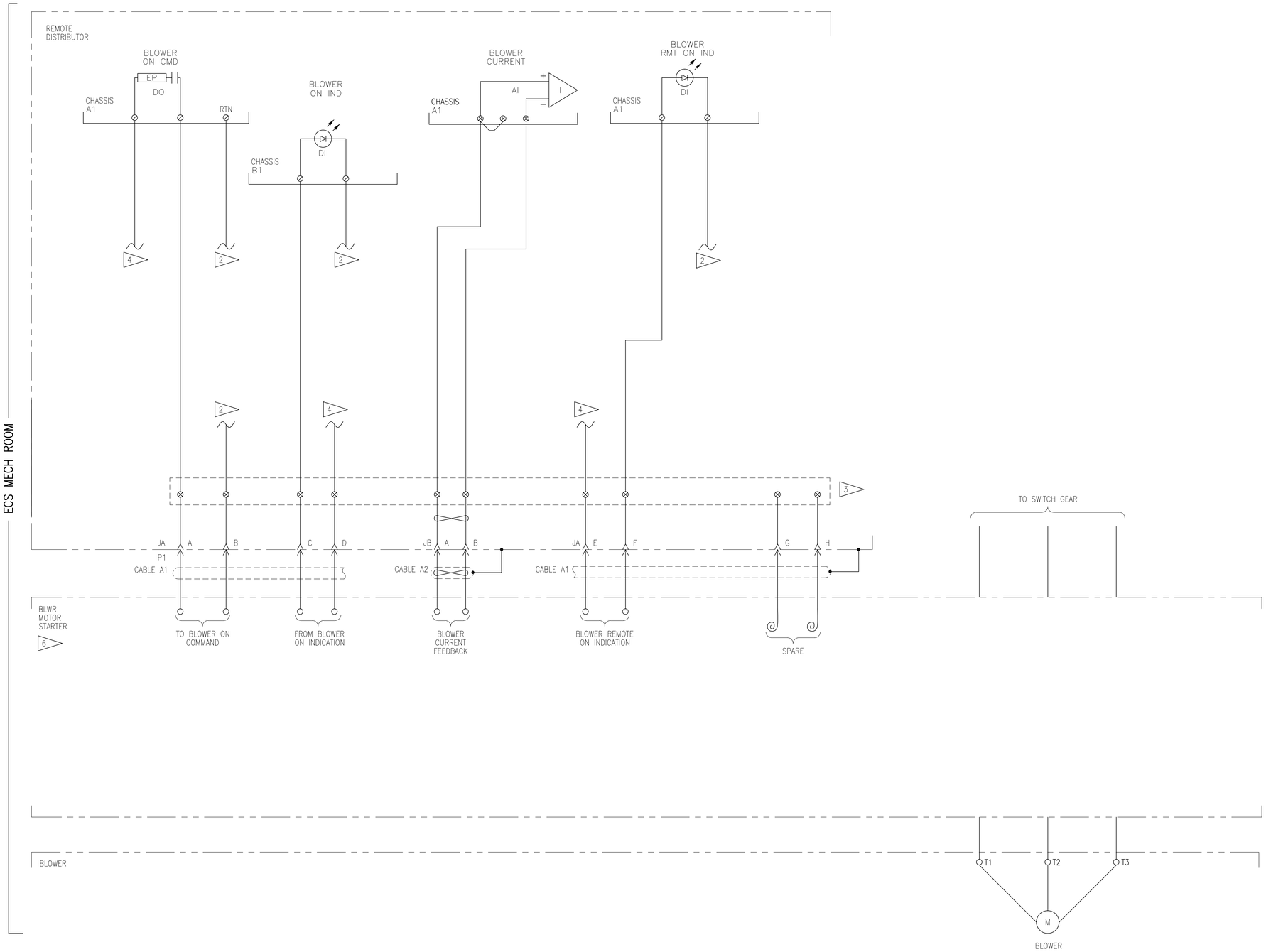

NOTES:

1. THIS SCHEMATIC IS TO BE USED IN CONJUNCTION WITH THE PLC AND REMOTE DISTRIBUTOR TAG INDEX TABLES. WIRING TERMINATIONS AND INTERFACE CONNECTOR ASSIGNMENTS ARE DEFINED IN THE REMOTE DISTRIBUTION CABINET TAG INDEX TABLES.

2. TO POWER RETURN/NEUTRAL LOCATED IN REMOTE DISTRIBUTOR ENCLOSURE.

3. THE CONTRACTOR SHALL USE THE EXISTING FIELD INTERFACE TERMINAL BLOCKS FOR CONNECTION OF THE PLC I/O TO THE ENCLOSURE INTERFACE CONNECTORS. IF ADDITIONAL TERMINAL BLOCKS ARE REQUIRED THE CONTRACTOR SHALL PROVIDE AND INSTALL.

4. TO SIGNAL/CONTROL POWER SOURCE BUS LOCATED IN REMOTE DISTRIBUTOR ENCLOSURE.

5. THIS SCHEMATIC SHALL BE USED FOR ICPS BLOWER 1 AND ICPS BLOWER 2.

6. REFERENCE ELECTRICAL SHEET E-020 FOR ICPS BLOWER MOTOR STARTER CONNECTION DETAILS.

7. FOR THE SINGLE FAULT TOLERANCE REQUIRED BY NASA. THE BLOWER MOTOR CONTROLS SHALL BE WIRED SO THAT:
   - ICPS BLOWER 1 IS CONNECTED TO SYSTEM A AND ICPS BLOWER 2 IS CONNECTED TO SYSTEM B
   - THE ICPS BLOWER INDICATIONS ARE CONNECTED TO THE OPPOSITE SYSTEM THAT THE BLOWER ON COMMAND IS WIRED INTO

8. THIS WIRING SCHEMATIC SHOWS A SINGLE BLOWER WIRED AS PRIMARY TO SYSTEM A. FOR A BLOWER WIRED AS PRIMARY TO SYSTEM B SWAP ALL OCCURANCES OF A1 WITH B1 AND B1 WITH A1.

9. THE CONTRACTOR SHALL BE RESPONSIBLE FOR PROGRAMMING THE CONTROL CHANGE OF A BLOWER SUCH THAT WHEN ONE BLOWER FAILS THE BLOWER ON THE NON-FAULTED BLOWER WILL TURN ON TO TAKE THE LOAD OF THE FAILED BLOWER.

10. THE CONTRACTOR SHALL BE RESPONSIBLE FOR PROGRAMMING THE ICPS BLOWER START ROTATION.

SYM	ZONE	DESCRIPTION	DATE	APPROVED
REVISIONS				

JACOBS
Jacobs Technology Inc.

NATIONAL AERONAUTICS AND SPACE ADMINISTRATION
JOHN F. KENNEDY SPACE CENTER, NASA
KENNEDY SPACE CENTER, FLORIDA

SIGNATURES		DATE
DRAWN	M. HENNIGH	3/07/14
CHECKED	J. WHITEFORD	3/07/14
SUBMITTED	S. RITTER	3/07/14
ST OF LICENSURE: TN LICENSE NO: 00110556		
APPROVED	G. WARD	3/07/14
	S. HUNT	3/07/14

KSC LAUNCH PAD 39-B
ENVIRONMENTAL CONTROL SYSTEM (ECS) REFURBISHMENT
INSTRUMENTATION
BLOWER MOTOR TYPE 2
CONTROLS SCHEMATIC

FILE NO.	SIZE	DWG.NO.	REV
	F	79K39602	

PCN. NO. 98898 | SHEET 160 OF 187

I-077

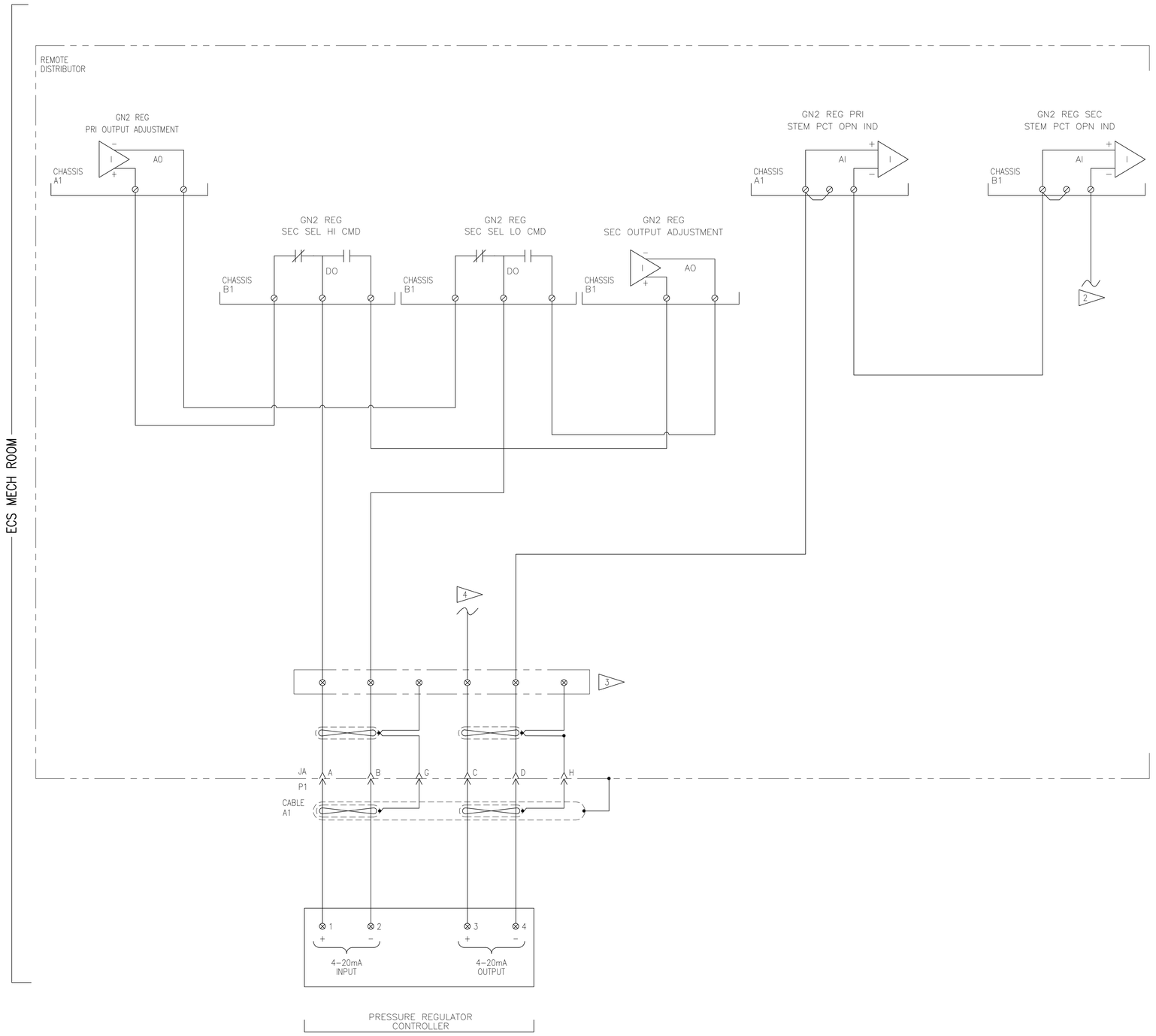

NOTES:

1. THIS SCHEMATIC IS TO BE USED IN CONJUNCTION WITH THE PLC AND REMOTE DISTRIBUTOR TAG INDEX TABLES. WIRING TERMINATIONS AND INTERFACE CONNECTOR ASSIGNMENTS ARE DEFINED IN THE REMOTE DISTRIBUTION CABINET TAG INDEX TABLES.

2. TO POWER RETURN/NEUTRAL LOCATED IN REMOTE DISTRIBUTOR ENCLOSURE.

3. CONTRACTOR SHALL USE EXISTING FIELD INTERFACE TERMINAL BLOCKS TO CONNECT PLC CHANNEL I/O TO THE REMOTE DISTRIBUTION ENCLOSURES INTERFACE CONNECTORS. IF ADDITIONAL TERMINAL BLOCKS ARE REQUIRED THE CONTRACTOR SHALL PROVIDE AND INSTALL.

4. TO SIGNAL/CONTROL POWER SOURCE BUS LOCATED IN REMOTE DISTRIBUTOR ENCLOSURE.

5. THIS SCHEMATIC SHALL BE USED FOR GN2 PRESSURE REDUCING/CONTROL VALVE PRV–702.

6. FOR THE SINGLE FAULT TOLERANCE REQUIRED BY NASA. THE SINGLE FAIL IN PLACE REGULATOR SHALL BE WIRED SO THAT:
   - EITHER SYSTEM A OR SYSTEM B CAN HAVE FULL CONTROL OVER THE REGULATOR
   - BOTH SYSTEM A AND SYSTEM B RECEIVE THE REGULATORS POSITION FEEDBACK
   - ON A SYSTEM A OR B PLC FAULT CONTROL OF THE REGULATOR WILL AUTOMATICALLY SWITCH TO THE UN–FAULTED SYSTEM

7. THE REGULATOR CONTROL SCHEMATIC SHOWN DETAILS SYSTEM A AS PRIMARY AND SYSTEM B AS THE SECONDARY.

8 FOR THIS REGULATOR THE CONTRACTOR SHALL BE RESPONSIBLE FOR PROGRAMMING THE CONTROL CHANGE ON A REGULATOR FAILURE SO THAT THE CONTROL CHANGE RESULTS IN A BUMPLESS TRANSFER OF THE REGULATOR CONTROLS TO THE NON–FAULTED REGULATOR.

9. THE TYPE OF REGULATOR USED SHALL FAIL IN PLACE ON THE LOSS OF DEVICE POWER OR CONTROL SIGNAL.

SYM	ZONE	DESCRIPTION	DATE	APPROVED
		REVISIONS		

JACOBS™
Jacobs Technology Inc.

SIGNATURES		DATE
DRAWN	M. HENNIGH	3/07/14
CHECKED	J. WHITEFORD	3/07/14
SUBMITTED	S. RITTER	3/07/14
ST OF LICENSURE: TN LICENSE NO: 00110556		
APPROVED	G. WARD	3/07/14
	S. HUNT	3/07/14

NATIONAL AERONAUTICS AND SPACE ADMINISTRATION
JOHN F. KENNEDY SPACE CENTER, NASA
KENNEDY SPACE CENTER, FLORIDA

KSC LAUNCH PAD 39-B
ENVIRONMENTAL CONTROL SYSTEM (ECS) REFURBISHMENT

INSTRUMENTATION
GN2 REGULATOR
CONTROL SCHEMATIC

FILE NO.	SIZE	DWG.NO.	REV
	F	79K39602	
PCN. NO. 98898		SHEET 161 OF 187	

I-078

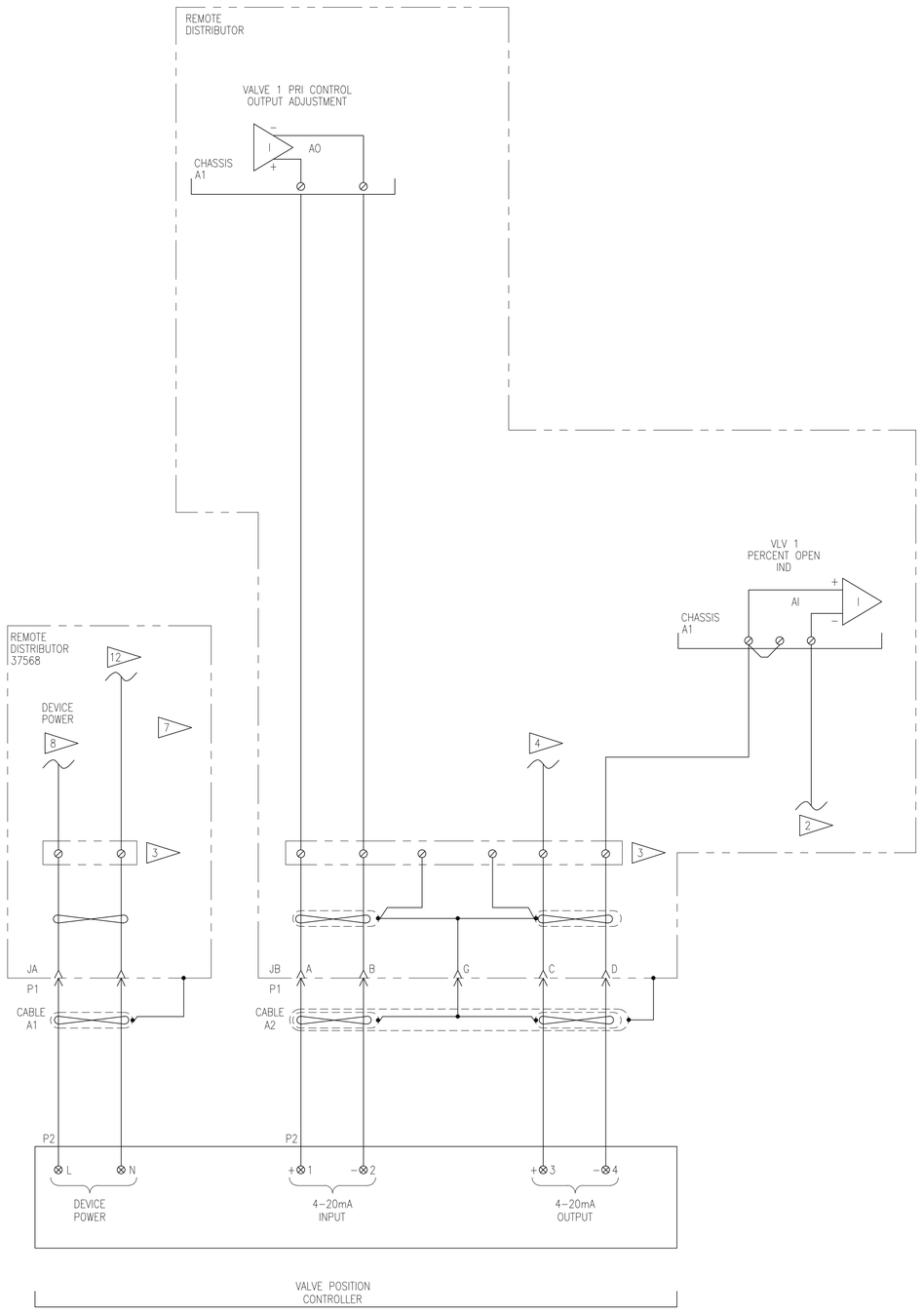

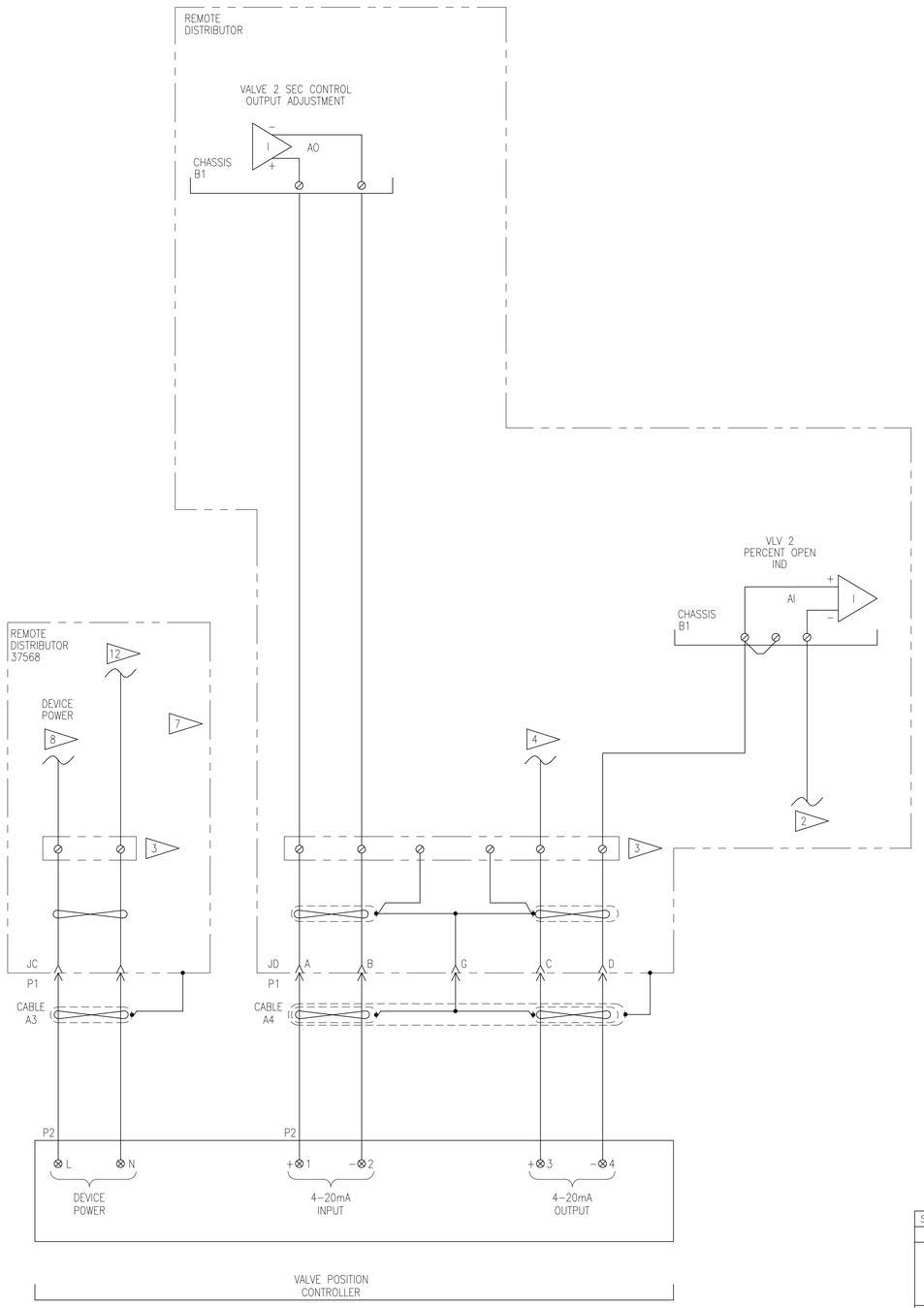

NOTES:

1. THIS SCHEMATIC IS TO BE USED IN CONJUNCTION WITH THE PLC AND REMOTE DISTRIBUTOR TAG INDEX TABLES. WIRING TERMINATIONS AND INTERFACE CONNECTOR ASSIGNMENTS ARE DEFINED IN THE REMOTE DISTRIBUTION CABINET TAG INDEX TABLES.
2. TO POWER RETURN/NEUTRAL LOCATED IN REMOTE DISTRIBUTOR ENCLOSURE.
3. CONTRACTOR SHALL USE EXISTING FIELD INTERFACE TERMINAL BLOCKS TO CONNECT PLC CHANNEL I/O TO THE REMOTE DISTRIBUTION ENCLOSURES INTERFACE CONNECTORS. IF ADDITIONAL TERMINAL BLOCKS ARE REQUIRED THE CONTRACTOR SHALL PROVIDE AND INSTALL.
4. TO SIGNAL/CONTROL POWER SOURCE BUS LOCATED IN REMOTE DISTRIBUTOR ENCLOSURE.
5. THIS SCHEMATIC SHALL BE USED FOR HUMIDITY CONTROL VALVES:
   - FCV-213 A & B — FCV-273 A & B
   - FCV-223 A & B — FCV-303 A & B
   - FCV-233 A & B
6. FOR THE SINGLE FAULT TOLERANCE REQUIRED BY NASA. THE REDUNDANT PAIR OF VALVES SHALL BE WIRED SO THAT:
   - VALVE 1 IS CONNECTED TO SYSTEM A AND VALVE 2 IS CONNECTED TO SYSTEM B
   - ON A FAILURE OF SYSTEM A OR B THE VALVE ON THE NON-FAILED SYSTEM IS ABLE TO RESUME CONTROL OVER THE PROCESS.
7. REFERENCE SHEET I-060 FOR DEVICE POWER SUPPLY CIRCUIT AND/OR POWER CONNECTION DETAILS.
8. VALVE SHALL BE POWERED FROM THE REGULATED 110VAC POWER SUPPLY LOCATED IN REMOTE POWER DISTRIBUTOR 37568.
9. THE CONTRACTOR SHALL BE RESPONSIBLE FOR PROGRAMMING THE CONTROL CHANGE ON A VALVE FAILURE SO THAT THE CONTROL CHANGE BETWEEN THE ABOVE HUMIDITY CONTROL VALVE PAIRS LISTED IN NOTE 5, RESULTS IN A BUMPLESS TRANSFER OF THE HUMIDITY CONTROLS TO THE NON-FAULTED VALVE.
10. REFERENCE SHEET I-089 FOR THE REDUNDANT DUAL ISOLATION SOLENOID VALVE SCHEMATIC.
11. THE TYPE OF HUMIDITY CONTROL VALVE USED SHALL FAIL IN PLACE ON LOSS OF DEVICE POWER OR CONTROL SIGNAL.
12. TO COMMON REGULATED 11VAC NEUTRAL BUS LOCATED IN REMOTE POWER DISTRIBUTOR 37568.
13. THE CONTRACTOR SHALL BE RESPONSIBLE FOR PROGRAMMING EACH OF THE VALVES SO THAT ONLY ONE VALVE IN THE REDUNDANT PAIR SHALL CONTROL THE DUCT HUMIDITY AT ANY ONE TIME.

SYM	ZONE	DESCRIPTION	DATE	APPROVED
REVISIONS				

JACOBS
Jacobs Technology Inc.

SIGNATURES		DATE
DRAWN	M. HENNIGH	3/07/14
CHECKED	J. WHITEFORD	3/07/14
SUBMITTED	S. RITTER	3/07/14
ST OF LICENSURE: TN LICENSE NO: 00110556		
APPROVED	G. WARD	3/07/14
	S. HUNT	3/07/14

NATIONAL AERONAUTICS AND SPACE ADMINISTRATION
JOHN F. KENNEDY SPACE CENTER, NASA
KENNEDY SPACE CENTER, FLORIDA

KSC LAUNCH PAD 39-B
ENVIRONMENTAL CONTROL SYSTEM (ECS) REFURBISHMENT

INSTRUMENTATION
4-20mA REDUNDANT DUAL CONTROL VALVE SCHEMATIC

FILE NO.	SIZE	DWG.NO.	REV
	F	79K39602	
PCN. NO. 98898		SHEET 162 OF 187	

I-079

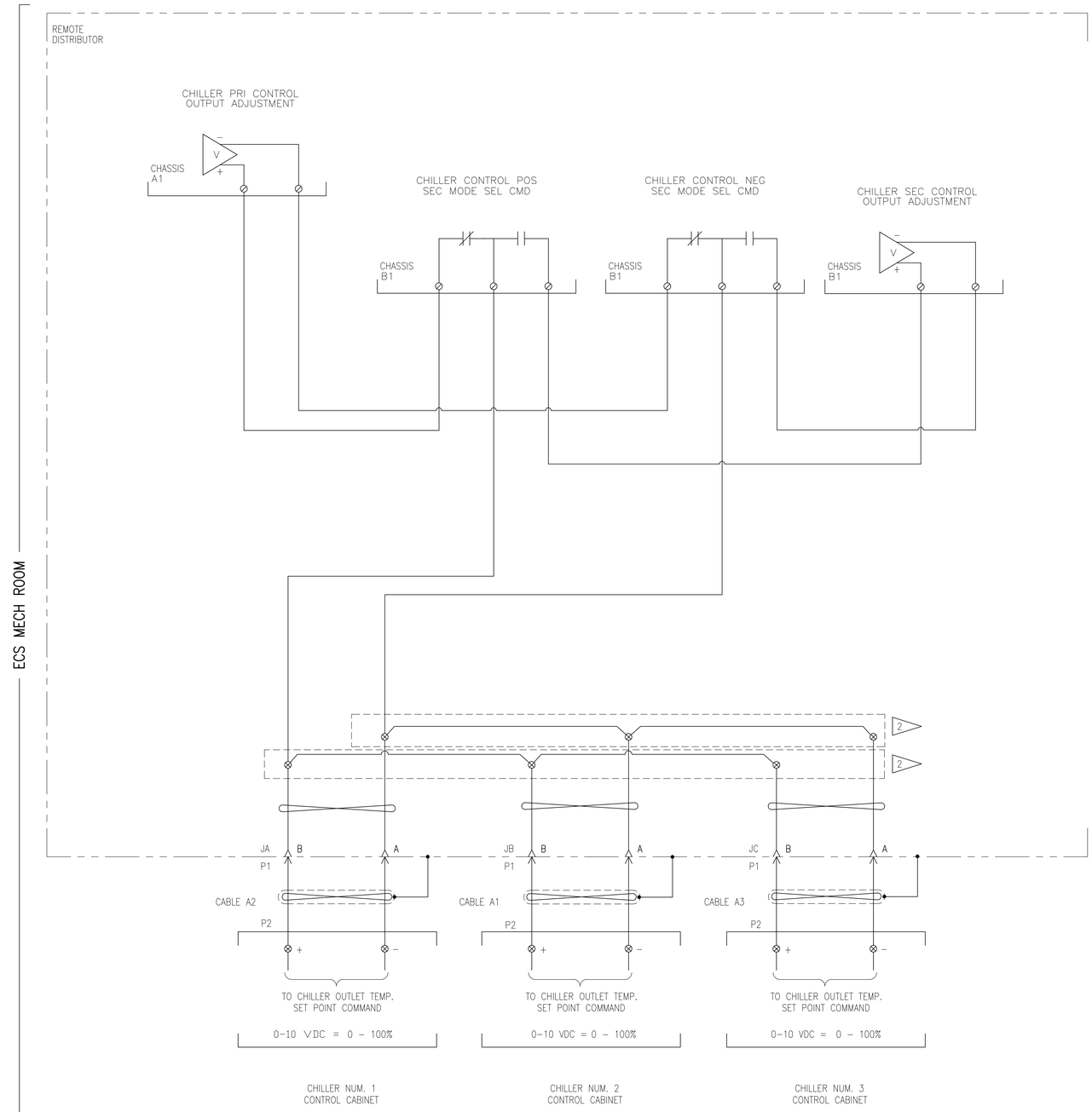

NOTES:

1. THIS SCHEMATIC IS TO BE USED IN CONJUNCTION WITH THE PLC AND REMOTE DISTRIBUTOR TAG INDEX TABLES. WIRING TERMINATIONS AND INTERFACE CONNECTOR ASSIGNMENTS ARE DEFINED IN THE REMOTE DISTRIBUTION CABINET TAG INDEX TABLES.

2. THE CONTRACTOR SHALL USE THE EXISTING FIELD INTERFACE TERMINAL BLOCKS FOR CONNECTION OF THE PLC I/O TO THE ENCLOSURE INTERFACE CONNECTORS. IF ADDITIONAL TERMINAL BLOCKS ARE REQUIRED THE CONTRACTOR SHALL PROVIDE AND INSTALL.

3. THIS CHILLER SETPOINT CONTROL SCHEMATIC SHALL BE USED FOR TEMPERATURE CONTROL SETPOINTS TO CHILLERS 1, 2, AND 3.

4. FOR THE SINGLE FAULT TOLERANCE REQUIRED BY NASA. THE 3 CHILLER TEMPERATURE SETPOINTS SHALL BE WIRED SO THAT:
   - EITHER SYSTEM A OR B IS ABLE TO SEND THE TEMPERATURE CONTROL SETPOINT TO CHILLERS 1, 2, AND 3.
   - ON A FAILURE OF SYSTEM A OR B THE TEMPERATURE SETPOINT SHALL BE CONTROLLED FROM THE NON–FAULTED SYSTEM.

5. DURING OPERATION OF THE CHILLER SYSTEMS 1 OF THE 3 CHILLER SYSTEMS SHALL ALWAYS BE DESIGNATED AS A BACKUP. THE DETERMINATION AS TO WHICH CHILLER IS USED AS THE BACKUP SHALL BE DETERMINED BY THE OPERATOR.

SYM	ZONE	DESCRIPTION	DATE	APPROVED
REVISIONS				

JACOBS
Jacobs Technology Inc.

SIGNATURES		DATE
DRAWN	M. HENNIGH	3/07/14
CHECKED	J. WHITEFORD	3/07/14
SUBMITTED	S. RITTER	3/07/14
ST OF LICENSURE: TN LICENSE NO: 00110556		
APPROVED	G. WARD	3/07/14
	S. HUNT	3/07/14

NATIONAL AERONAUTICS AND SPACE ADMINISTRATION
JOHN F. KENNEDY SPACE CENTER, NASA
KENNEDY SPACE CENTER, FLORIDA

KSC LAUNCH PAD 39-B
ENVIRONMENTAL CONTROL SYSTEM (ECS) REFURBISHMENT
INSTRUMENTATION
CHILLERS 1, 2, AND 3 TEMPERATURE COMMAND SCHEMATIC

FILE NO.	SIZE	DWG.NO.	REV
	F	79K39602	
PCN. NO. 98898		SHEET 163 OF 187	

I-080

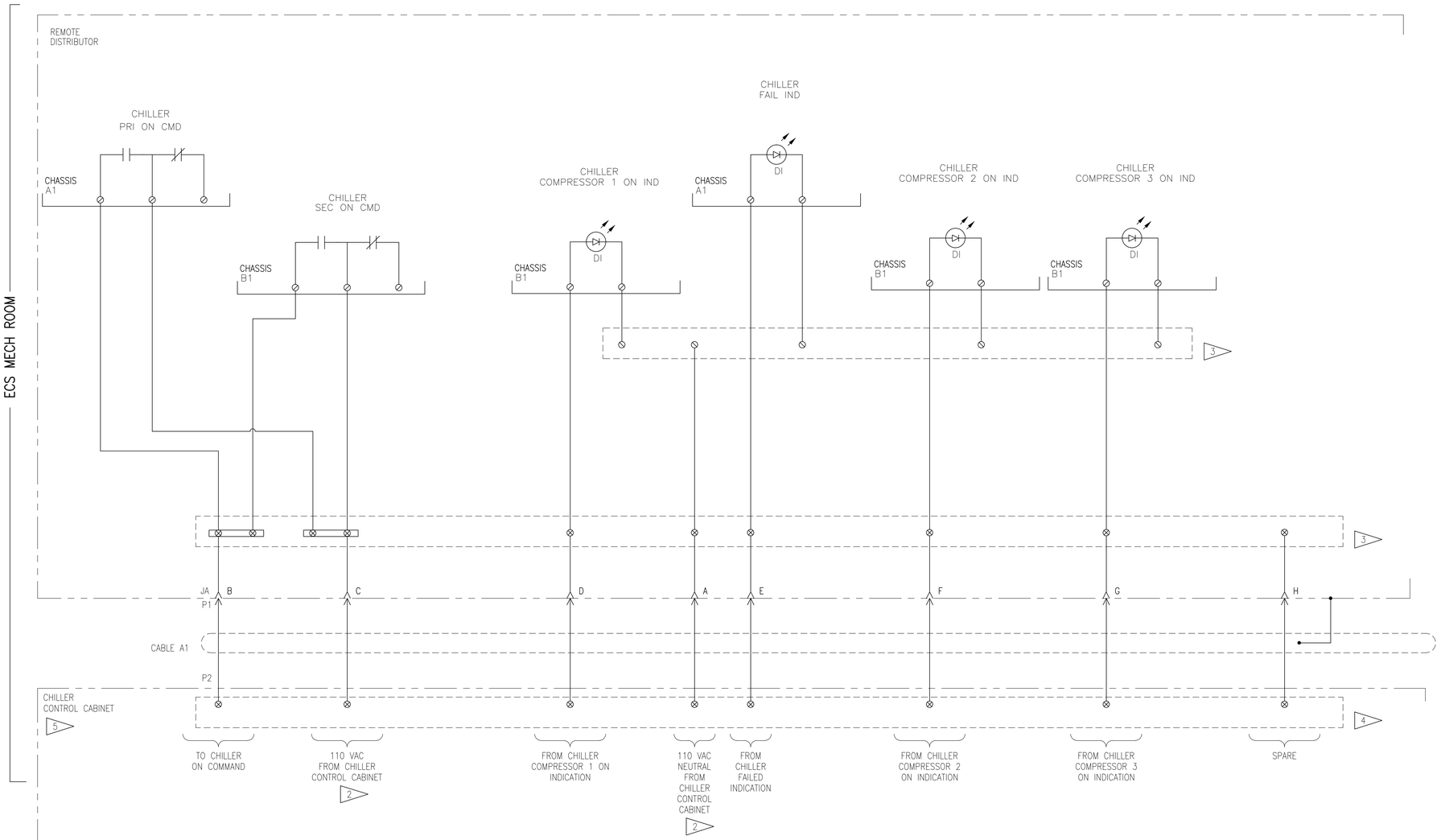

NOTES:

1. THIS SCHEMATIC IS TO BE USED IN CONJUNCTION WITH THE PLC AND REMOTE DISTRIBUTOR TAG INDEX TABLES. WIRING TERMINATIONS AND INTERFACE CONNECTOR ASSIGNMENTS ARE DEFINED IN THE REMOTE DISTRIBUTION CABINET TAG INDEX TABLES.
2. ALL 110VAC CONTROL AND I/O POWER IS SOURCED FROM THE RESPECTIVE CHILLER CONTROL CABINET.
3. THE CONTRACTOR SHALL USE THE EXISTING FIELD INTERFACE TERMINAL BLOCKS FOR CONNECTION OF THE PLC I/O TO THE ENCLOSURE INTERFACE CONNECTORS. IF ADDITIONAL TERMINAL BLOCKS ARE REQUIRED THE CONTRACTOR SHALL PROVIDE AND INSTALL.
4. CHILLER CONTROL CABINET REMOTE INTERFACE TERMINAL BLOCKS.
5. CHILLER CONTROL CABINET SHALL BE SUPPLIED BY CHILLER MANUFACTURER.
6. THIS CHILLER CONTROL SCHEMATIC SHALL BE USED FOR CONTROL OF CHILLERS 1, 2, AND 3.
7. FOR THE SINGLE FAULT TOLERANCE REQUIRED BY NASA. THE 3 CHILLERS 110VAC REMOTE CONTROLS SHALL BE WIRED SO THAT:
   - CHILLERS 1 AND 2 SHALL BE PRIMARY TO SYSTEM A AND CHILLER 3 PRIMARY TO SYSTEM B.
   - CHILLERS 1, 2, AND 3 CAN BE STARTED FROM EITHER SYSTEM A OR SYSTEM B.
8. THE CONTRACTOR SHALL BE RESPONSIBLE FOR PROGRAMMING THE CHILLER OPERATIONS SO THAT ON A FAILURE OF ONE OF THE CHILLER SYSTEMS, THE REDUNDANT (STANDBY) CHILLER WILL START AND TAKEOVER THE LOAD OF THE FAILED CHILLER SYSTEM.

SYM	ZONE	DESCRIPTION	DATE	APPROVED
		REVISIONS		

JACOBS
Jacobs Technology Inc.

SIGNATURES		DATE
DRAWN	M. HENNIGH	3/07/14
CHECKED	J. WHITEFORD	3/07/14
SUBMITTED	S. RITTER	3/07/14
ST OF LICENSURE: TN LICENSE NO: 00110556		
APPROVED	G. WARD	3/07/14
	S. HUNT	3/07/14

NATIONAL AERONAUTICS AND SPACE ADMINISTRATION
JOHN F. KENNEDY SPACE CENTER, NASA
KENNEDY SPACE CENTER, FLORIDA

KSC LAUNCH PAD 39-B
ENVIRONMENTAL CONTROL SYSTEM (ECS) REFURBISHMENT

INSTRUMENTATION
GENERAL CHILLER INTERFACE CONTROLS SCHEMATIC

FILE NO.	SIZE	DWG.NO.	REV
I-081	F	79K39602	
PCN. NO. 98898		SHEET 164 OF 187	

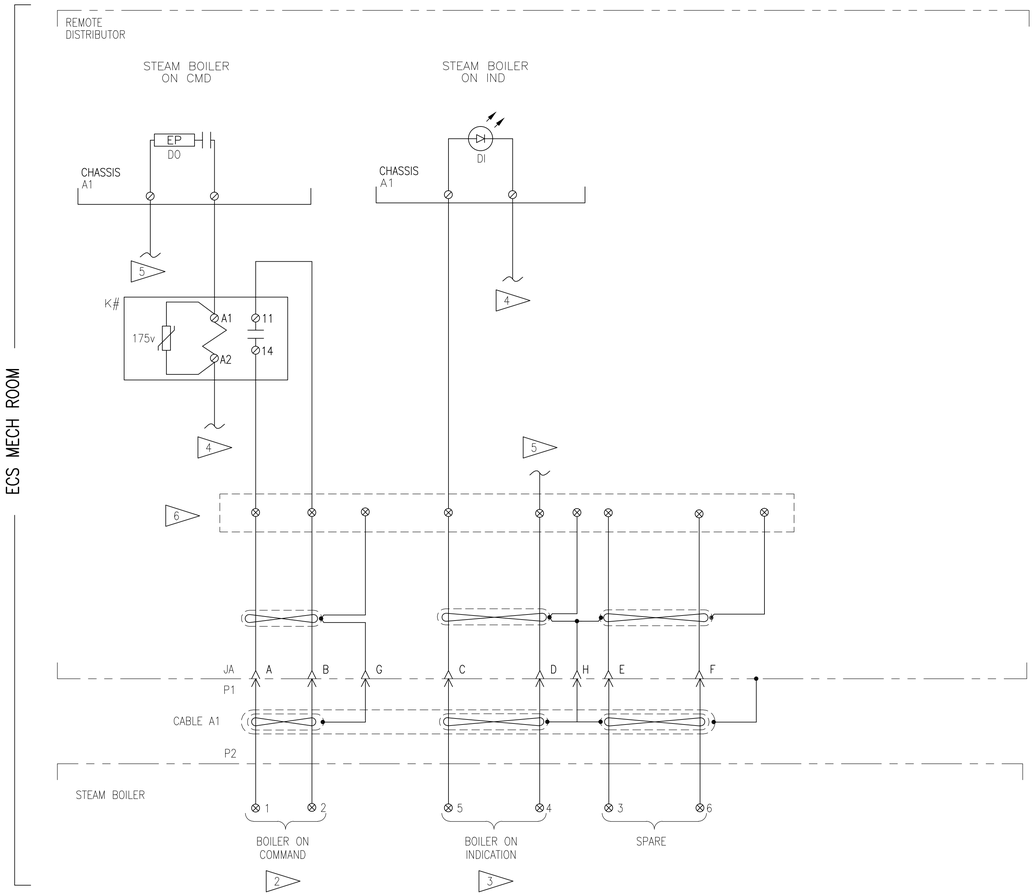

NOTES:

1. THIS SCHEMATIC IS TO BE USED IN CONJUNCTION WITH THE PLC AND REMOTE DISTRIBUTOR TAG INDEX TABLES. WIRING TERMINATIONS AND INTERFACE CONNECTOR ASSIGNMENTS ARE DEFINED IN THE REMOTE DISTRIBUTION CABINET TAG INDEX TABLES.
2. 110VAC POWER FOR BOILER ON COMMAND SHALL BE SOURCED FROM BOILER CONTROL PANEL.
3. BOILER ON INDICATION SHALL BE A FORM C DRY CONTACT LOCATED IN THE BOILER CONTROL PANEL.
4. TO UNREGULATED 110VAC POWER RETURN/NEUTRAL LOCATED IN REMOTE DISTRIBUTOR ENCLOSURE.
5. TO UNREGULATED 110VAC POWER SOURCE BUS LOCATED IN REMOTE DISTRIBUTOR ENCLOSURE.
6. THE CONTRACTOR SHALL USE THE EXISTING FIELD INTERFACE TERMINAL BLOCKS FOR CONNECTION OF THE PLC I/O TO THE ENCLOSURE INTERFACE CONNECTORS. IF ADDITIONAL TERMINAL BLOCKS ARE REQUIRED THE CONTRACTOR SHALL PROVIDE AND INSTALL.
7. THIS BOILER CONTROL SCHEMATIC SHALL BE USED FOR BOILERS NBO-601 AND SBO-602.
8. FOR THE SINGLE FAULT TOLERANCE REQUIRED BY NASA, THE TWO BOILER SYSTEMS SHALL BE WIRED SO THAT:
   - THE NORTH BOILER IS CONNECTED TO SYSTEM B AND THE SOUTH BOILER IS CONNECTED TO SYSTEM A.
   - THE NORTH AND SOUTH BOILERS PLC I/O ARE POWERED FROM SEPARATE UNREGULATED 110VAC CIRCUITS.
9. THE CONTRACTOR SHALL BE RESPONSIBLE FOR PROGRAMMING THE BOILER OPERATIONS SO THAT ON A BOILER SYSTEM FAILURE THE REDUNDANT BOILER WILL START AND TAKE OVER THE LOAD OF THE FAILED BOILER SYSTEM.

SYM	ZONE	DESCRIPTION	DATE	APPROVED
REVISIONS				

JACOBS
Jacobs Technology Inc.

SIGNATURES		DATE
DRAWN	M. HENNIGH	3/07/14
CHECKED	J. WHITEFORD	3/07/14
SUBMITTED	S. RITTER	3/07/14
ST OF LICENSURE: TN LICENSE NO: 00110556		
APPROVED	G. WARD	3/07/14
	S. HUNT	3/07/14

NATIONAL AERONAUTICS AND SPACE ADMINISTRATION
JOHN F. KENNEDY SPACE CENTER, NASA
KENNEDY SPACE CENTER, FLORIDA

KSC LAUNCH PAD 39-B
ENVIRONMENTAL CONTROL SYSTEM (ECS) REFURBISHMENT
INSTRUMENTATION
GENERAL BOILER INTERFACE
CONTROLS SCHEMATIC

FILE NO.	SIZE	DWG.NO.	REV
	F	79K39602	
PCN. NO. 98898		SHEET 165 OF 187	

I-082

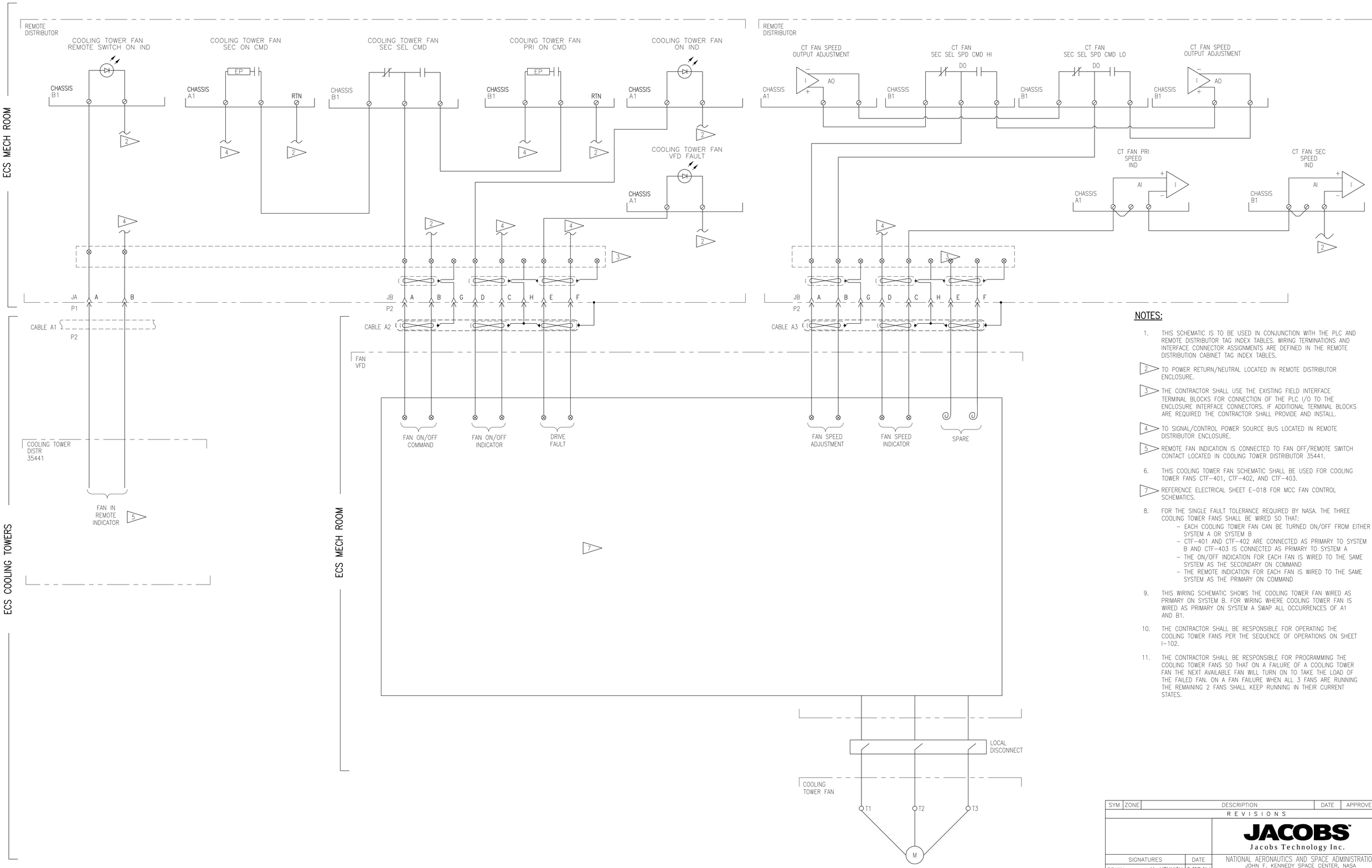

NOTES:

1. THIS SCHEMATIC IS TO BE USED IN CONJUNCTION WITH THE PLC AND REMOTE DISTRIBUTOR TAG INDEX TABLES. WIRING TERMINATIONS AND INTERFACE CONNECTOR ASSIGNMENTS ARE DEFINED IN THE REMOTE DISTRIBUTION CABINET TAG INDEX TABLES.

2. TO POWER RETURN/NEUTRAL LOCATED IN REMOTE DISTRIBUTOR ENCLOSURE.

3. THE CONTRACTOR SHALL USE THE EXISTING FIELD INTERFACE TERMINAL BLOCKS FOR CONNECTION OF THE PLC I/O TO THE ENCLOSURE INTERFACE CONNECTORS. IF ADDITIONAL TERMINAL BLOCKS ARE REQUIRED THE CONTRACTOR SHALL PROVIDE AND INSTALL.

4. TO SIGNAL/CONTROL POWER SOURCE BUS LOCATED IN REMOTE DISTRIBUTOR ENCLOSURE.

5. REMOTE FAN INDICATION IS CONNECTED TO FAN OFF/REMOTE SWITCH CONTACT LOCATED IN COOLING TOWER DISTRIBUTOR 35441.

6. THIS COOLING TOWER FAN SCHEMATIC SHALL BE USED FOR COOLING TOWER FANS CTF-401, CTF-402, AND CTF-403.

7. REFERENCE ELECTRICAL SHEET E-018 FOR MCC FAN CONTROL SCHEMATICS.

8. FOR THE SINGLE FAULT TOLERANCE REQUIRED BY NASA. THE THREE COOLING TOWER FANS SHALL BE WIRED SO THAT:
   - EACH COOLING TOWER FAN CAN BE TURNED ON/OFF FROM EITHER SYSTEM A OR SYSTEM B
   - CTF-401 AND CTF-402 ARE CONNECTED AS PRIMARY TO SYSTEM B AND CTF-403 IS CONNECTED AS PRIMARY TO SYSTEM A
   - THE ON/OFF INDICATION FOR EACH FAN IS WIRED TO THE SAME SYSTEM AS THE SECONDARY ON COMMAND
   - THE REMOTE INDICATION FOR EACH FAN IS WIRED TO THE SAME SYSTEM AS THE PRIMARY ON COMMAND

9. THIS WIRING SCHEMATIC SHOWS THE COOLING TOWER FAN WIRED AS PRIMARY ON SYSTEM B. FOR WIRING WHERE COOLING TOWER FAN IS WIRED AS PRIMARY ON SYSTEM A SWAP ALL OCCURRENCES OF A1 AND B1.

10. THE CONTRACTOR SHALL BE RESPONSIBLE FOR OPERATING THE COOLING TOWER FANS PER THE SEQUENCE OF OPERATIONS ON SHEET I-102.

11. THE CONTRACTOR SHALL BE RESPONSIBLE FOR PROGRAMMING THE COOLING TOWER FANS SO THAT ON A FAILURE OF A COOLING TOWER FAN THE NEXT AVAILABLE FAN WILL TURN ON TO TAKE THE LOAD OF THE FAILED FAN. ON A FAN FAILURE WHEN ALL 3 FANS ARE RUNNING THE REMAINING 2 FANS SHALL KEEP RUNNING IN THEIR CURRENT STATES.

SYM	ZONE	DESCRIPTION	DATE	APPROVED
REVISIONS				

JACOBS
Jacobs Technology Inc.

SIGNATURES		DATE
DRAWN	M. HENNIGH	3/07/14
CHECKED	J. WHITEFORD	3/07/14
SUBMITTED	S. RITTER	3/07/14
ST OF LICENSURE: TN LICENSE NO: 00110556		
APPROVED	G. WARD	3/07/14
	S. HUNT	3/07/14

NATIONAL AERONAUTICS AND SPACE ADMINISTRATION
JOHN F. KENNEDY SPACE CENTER, NASA
KENNEDY SPACE CENTER, FLORIDA

KSC LAUNCH PAD 39-B
ENVIRONMENTAL CONTROL SYSTEM (ECS) REFURBISHMENT

INSTRUMENTATION
GENERAL COOLING TOWER FAN CONTROLS SCHEMATIC

FILE NO.	SIZE	DWG.NO.	REV
I-083	F	79K39602	
PCN. NO. 98898		SHEET 166 OF 187	

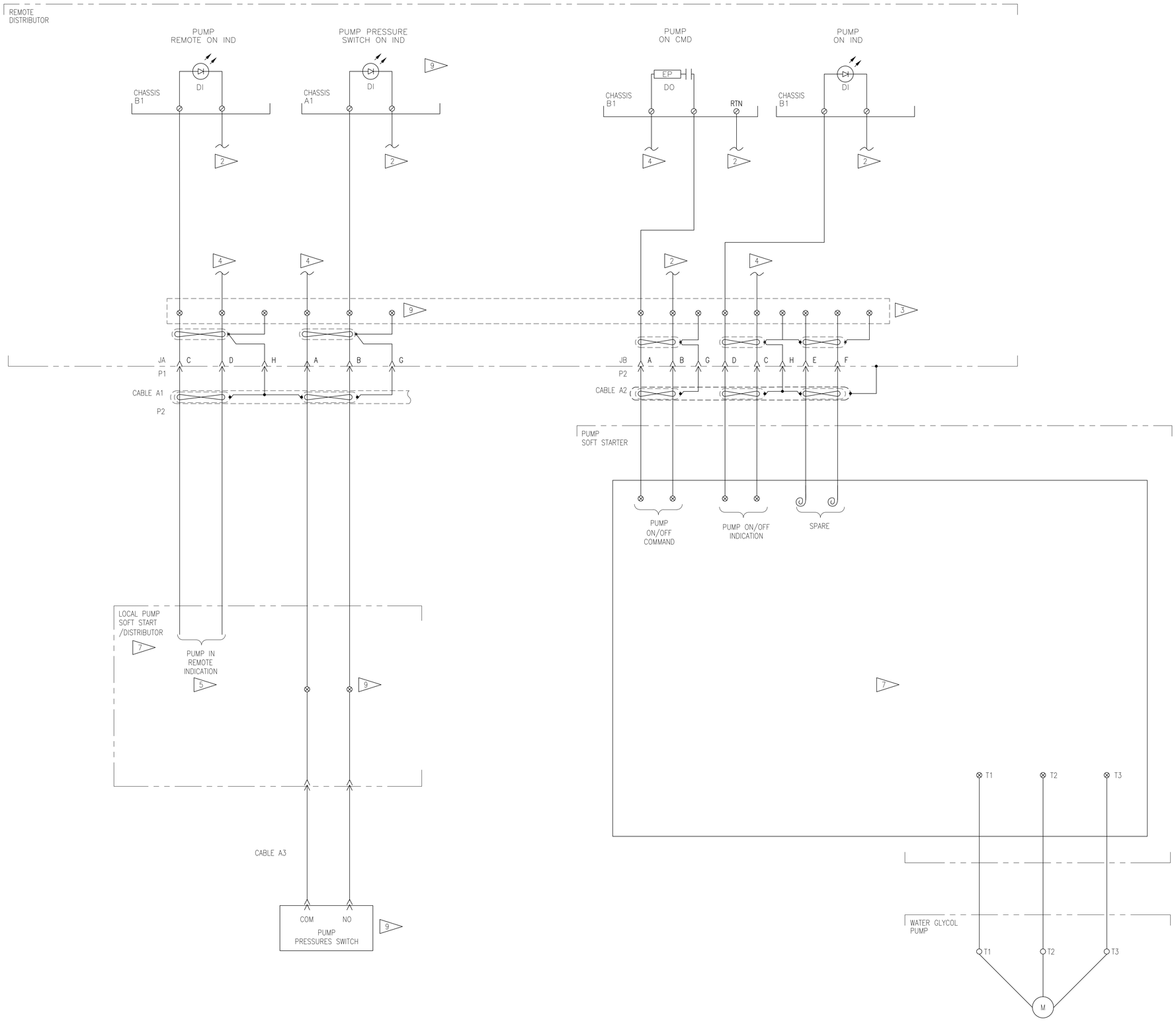

NOTES:

1. THIS SCHEMATIC IS TO BE USED IN CONJUNCTION WITH THE PLC AND REMOTE DISTRIBUTOR TAG INDEX TABLES. WIRING TERMINATIONS AND INTERFACE CONNECTOR ASSIGNMENTS ARE DEFINED IN THE REMOTE DISTRIBUTION CABINET TAG INDEX TABLES.

2. TO POWER RETURN/NEUTRAL LOCATED IN REMOTE DISTRIBUTOR ENCLOSURE.

3. THE CONTRACTOR SHALL USE THE EXISTING FIELD INTERFACE TERMINAL BLOCKS FOR CONNECTION OF THE PLC I/O TO THE ENCLOSURE INTERFACE CONNECTORS. IF ADDITIONAL TERMINAL BLOCKS ARE REQUIRED THE CONTRACTOR SHALL PROVIDE AND INSTALL.

4. TO SIGNAL/CONTROL POWER SOURCE BUS LOCATED IN REMOTE DISTRIBUTOR ENCLOSURE.

5. REMOTE PUMP INDICATION IS CONNECTED TO PUMP OFF/REMOTE SWITCH CONTACT LOCATED IN THE PUMP SOFT START FOR GLYCOL PUMPS AND COOLING TOWER DISTRIBUTOR 35441 FOR COOLING TOWER PUMPS.

6. THIS COOLING PUMP CONTROL SCHEMATIC SHALL BE USED FOR COOLING TOWER AND GLYCOL PUMPS P-411, P-412, P-511 AND P-512.

7. REFERENCE ELECTRICAL SHEET E-018 FOR MCC PUMP CONTROL SCHEMATICS.

8. FOR THE SINGLE FAULT TOLERANCE REQUIRED BY NASA. THE COOLING TOWER AND GLYCOL PUMP PAIRS SHALL BE WIRED SO THAT:
   - EACH PUMP IN THE PAIR SHALL BE WIRED TO DIFFERENT SYSTEMS. P-411 AND P-511 SHALL BE WIRED TO SYSTEM B AND P-412 AND P-512 SHALL BE WIRED TO SYSTEM A.
   - THE PUMP ON INDICATION PRESSURE SWITCHES SHALL BE WIRED TO THE OPPOSITE SYSTEM THAT THE PUMP ON COMMAND IS WIRED INTO.

9. WATER/GLYCOL PUMPS 1 AND 2 PRESSURE SWITCHES SHALL BE ROUTED DIRECTLY FROM THE REMOTE DISTRIBUTOR, USING A SEPARATE CONNECTOR, TO THE PRESSURE SWITCH. REFERENCE REMOTE DISTRIBUTOR 35426 TAG INDEXES FOR THE GLYCOL PUMP PRESSURE SWITCH CONNECTOR AND PLC CHANNEL DESIGNATIONS.

10. THIS WIRING SCHEMATIC SHOWS THE PUMP WIRED AS PRIMARY ON SYSTEM B. FOR PUMPS WIRED AS PRIMARY ON SYSTEM A SWAP ALL OCCURRENCES OF A1 AND B1.

11. THE CONTRACTOR SHALL BE RESPONSIBLE FOR PROGRAMMING THE CONTROL CHANGE ON A FAILURE OF A WATER GLYCOL PUMP SUCH THAT WHEN A PUMP FAILS, THE NON-FAULTED PUMP WILL TURN ON TO TAKE THE LOAD OF THE FAILED PUMP.

12. THE CONTRACTOR SHALL BE RESPONSIBLE FOR PROGRAMMING THE START ROTATION FOR THE COOLING TOWER AND GLYCOL PUMPS.

SYM	ZONE	DESCRIPTION	DATE	APPROVED
REVISIONS				

JACOBS
Jacobs Technology Inc.

SIGNATURES		DATE
DRAWN	M. HENNIGH	3/07/14
CHECKED	J. WHITEFORD	3/07/14
SUBMITTED	S. RITTER	3/07/14
ST OF LICENSURE: TN LICENSE NO: 00110556		
APPROVED	G. WARD	3/07/14
	S. HUNT	3/07/14

NATIONAL AERONAUTICS AND SPACE ADMINISTRATION
JOHN F. KENNEDY SPACE CENTER, NASA
KENNEDY SPACE CENTER, FLORIDA

KSC LAUNCH PAD 39-B
ENVIRONMENTAL CONTROL SYSTEM (ECS) REFURBISHMENT
INSTRUMENTATION
GENERAL PUMP
CONTROLS SCHEMATIC

FILE NO.	SIZE	DWG.NO.	REV
	F	79K39602	

PCN. NO. 98898 | SHEET 167 OF 187

I-084

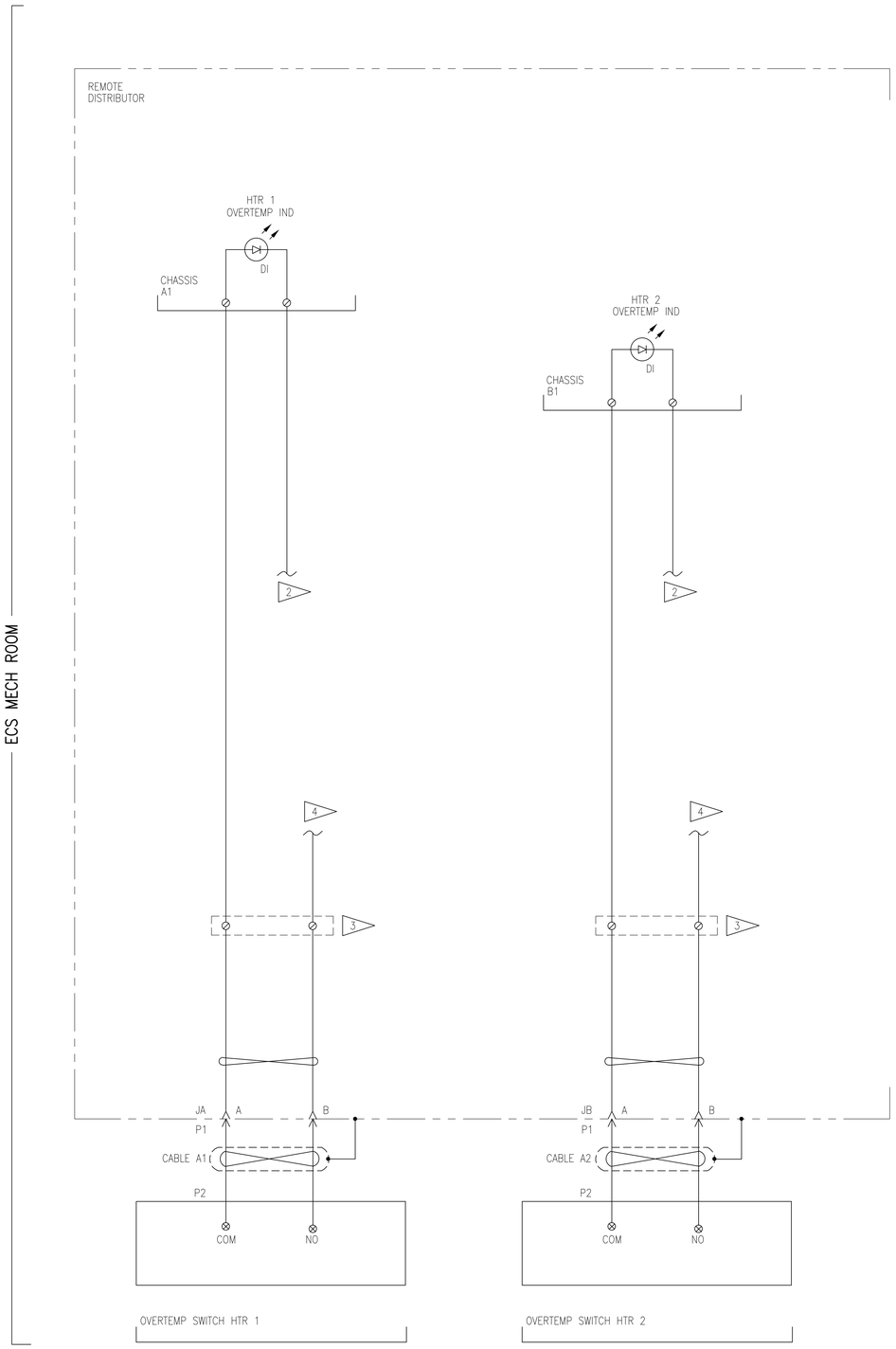

NOTES:

1. THIS SCHEMATIC IS TO BE USED IN CONJUNCTION WITH THE PLC AND REMOTE DISTRIBUTOR TAG INDEX TABLES. WIRING TERMINATIONS AND INTERFACE CONNECTOR ASSIGNMENTS ARE DEFINED IN THE REMOTE DISTRIBUTION CABINET TAG INDEX TABLES.

2. TO POWER RETURN/NEUTRAL LOCATED IN REMOTE DISTRIBUTOR ENCLOSURE.

3. THE CONTRACTOR SHALL USE THE EXISTING FIELD INTERFACE TERMINAL BLOCKS FOR CONNECTION OF THE PLC I/O TO THE ENCLOSURE INTERFACE CONNECTORS. IF ADDITIONAL TERMINAL BLOCKS ARE REQUIRED THE CONTRACTOR SHALL PROVIDE AND INSTALL.

4. TO SIGNAL/CONTROL POWER SOURCE BUS LOCATED IN REMOTE DISTRIBUTOR ENCLOSURE.

5. THIS HEATER OVER TEMPERATURE SWITCH SCHEMATIC SHALL BE USED FOR SWITCHES:
   - OTS-201 A & B
   - OTS-211 A & B
   - OTS-221 A & B
   - OTS-231 A & B
   - OTS-251 A & B
   - OTS-261 A & B
   - OTS-271 A & B
   - OTS-301 A & B

6. FOR THE SINGLE FAULT TOLERANCE REQUIRED BY NASA. THE REDUNDANT PAIR OF OVER TEMPERATURE SWITCHES SHALL BE WIRED SO THAT:
   - OTS HTR 1 IS WIRED TO SYSTEM A AND OTS HTR 2 IS WIRED TO SYSTEM B

7. THE CONTRACTOR SHALL BE RESPONSIBLE FOR PROGRAMMING THE HEATER OVER TEMP SWITCHES WITH THE HEATERS SO THAT THE CONTROL CHANGE RESULTS IN A BUMPLESS TRANSFER TO THE NON-FAULTED HEATER.

8. REFERENCE SHEET I-104 FOR SUPPLY AIR/GN2 DUCT SEQUENCE OF OPERATIONS.

SYM	ZONE	DESCRIPTION	DATE	APPROVED
REVISIONS				

JACOBS
Jacobs Technology Inc.

SIGNATURES		DATE
DRAWN	M. HENNIGH	3/07/14
CHECKED	J. WHITEFORD	3/07/14
SUBMITTED	S. RITTER	3/07/14
ST OF LICENSURE: TN LICENSE NO: 00110556		
APPROVED	G. WARD	3/07/14
	S. HUNT	3/07/14

NATIONAL AERONAUTICS AND SPACE ADMINISTRATION
JOHN F. KENNEDY SPACE CENTER, NASA
KENNEDY SPACE CENTER, FLORIDA

KSC LAUNCH PAD 39-B
ENVIRONMENTAL CONTROL SYSTEM (ECS) REFURBISHMENT

INSTRUMENTATION
REDUNDANT OVERTEMPERATURE SWITCH SCHEMATIC

FILE NO.	SIZE	DWG.NO.	REV
	F	79K39602	
PCN. NO. 98898		SHEET 168 OF 187	

I-085

NOTES:

1. THIS SCHEMATIC IS TO BE USED IN CONJUNCTION WITH THE PLC AND REMOTE DISTRIBUTOR TAG INDEX TABLES. WIRING TERMINATIONS AND INTERFACE CONNECTOR ASSIGNMENTS ARE DEFINED IN THE REMOTE DISTRIBUTION CABINET TAG INDEX TABLES.

2. THE CONTRACTOR SHALL USE THE EXISTING FIELD INTERFACE TERMINAL BLOCKS FOR CONNECTION OF THE PLC I/O TO THE ENCLOSURE INTERFACE CONNECTORS. IF ADDITIONAL TERMINAL BLOCKS ARE REQUIRED THE CONTRACTOR SHALL PROVIDE AND INSTALL.

3. THIS TEMPERATURE SIGNAL SCHEMATIC SHALL BE USED FOR ALL REDUNDANT PAIRS OF RTD TEMPERATURE PROBES.

4. FOR SINGLE FAULT TOLERANCE REQUIRED BY NASA ONE TEMPERATURE PROBE SHALL BE CONNECTED TO SYSTEM A AND THE OTHER TO SYSTEM B.

5. THE CONTRACTOR SHALL BE RESPONSIBLE FOR PROGRAMMING THE TEMPERATURE MEASUREMENT CHANGE ON A FAILURE OF A RTD TEMPERATURE PROBE TO THE NON-FAULTED RTD TEMPERATURE PROBE.

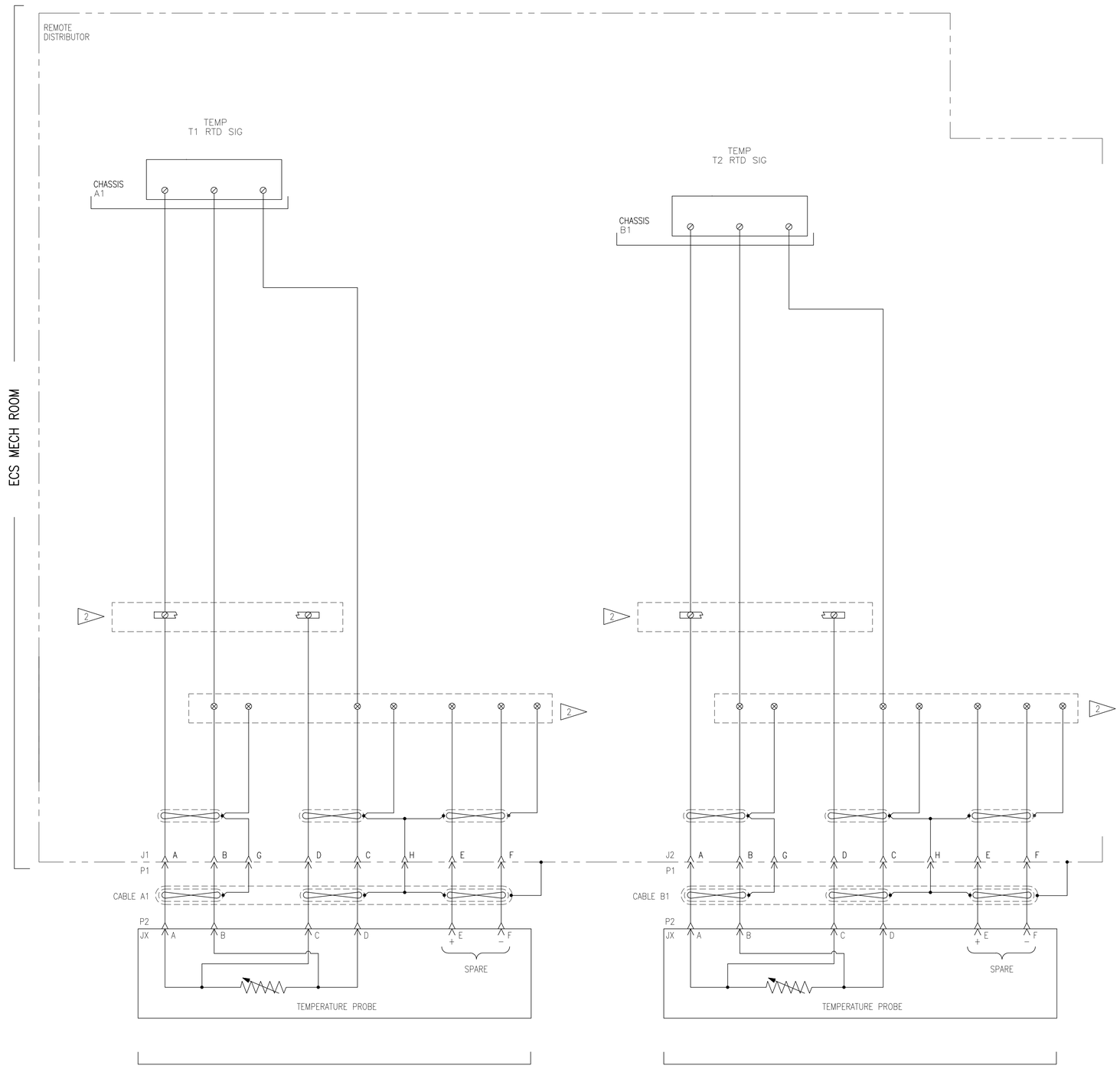

SYM	ZONE	DESCRIPTION	DATE	APPROVED
		REVISIONS		

JACOBS
Jacobs Technology Inc.

SIGNATURES		DATE
DRAWN	M. HENNIGH	3/07/14
CHECKED	J. WHITEFORD	3/07/14
SUBMITTED	S. RITTER	3/07/14
ST OF LICENSURE: TN LICENSE NO: 00110556		
APPROVED	G. WARD	3/07/14
	S. HUNT	3/07/14

NATIONAL AERONAUTICS AND SPACE ADMINISTRATION
JOHN F. KENNEDY SPACE CENTER, NASA
KENNEDY SPACE CENTER, FLORIDA

KSC LAUNCH PAD 39-B
ENVIRONMENTAL CONTROL SYSTEM (ECS) REFURBISHMENT

INSTRUMENTATION GENERAL REDUNDANT TEMPERATURE SIGNAL SCHEMATIC

FILE NO.	SIZE	DWG.NO.	REV
	F	79K39602	
PCN. NO. 98898		SHEET 169 OF 187	

I-086

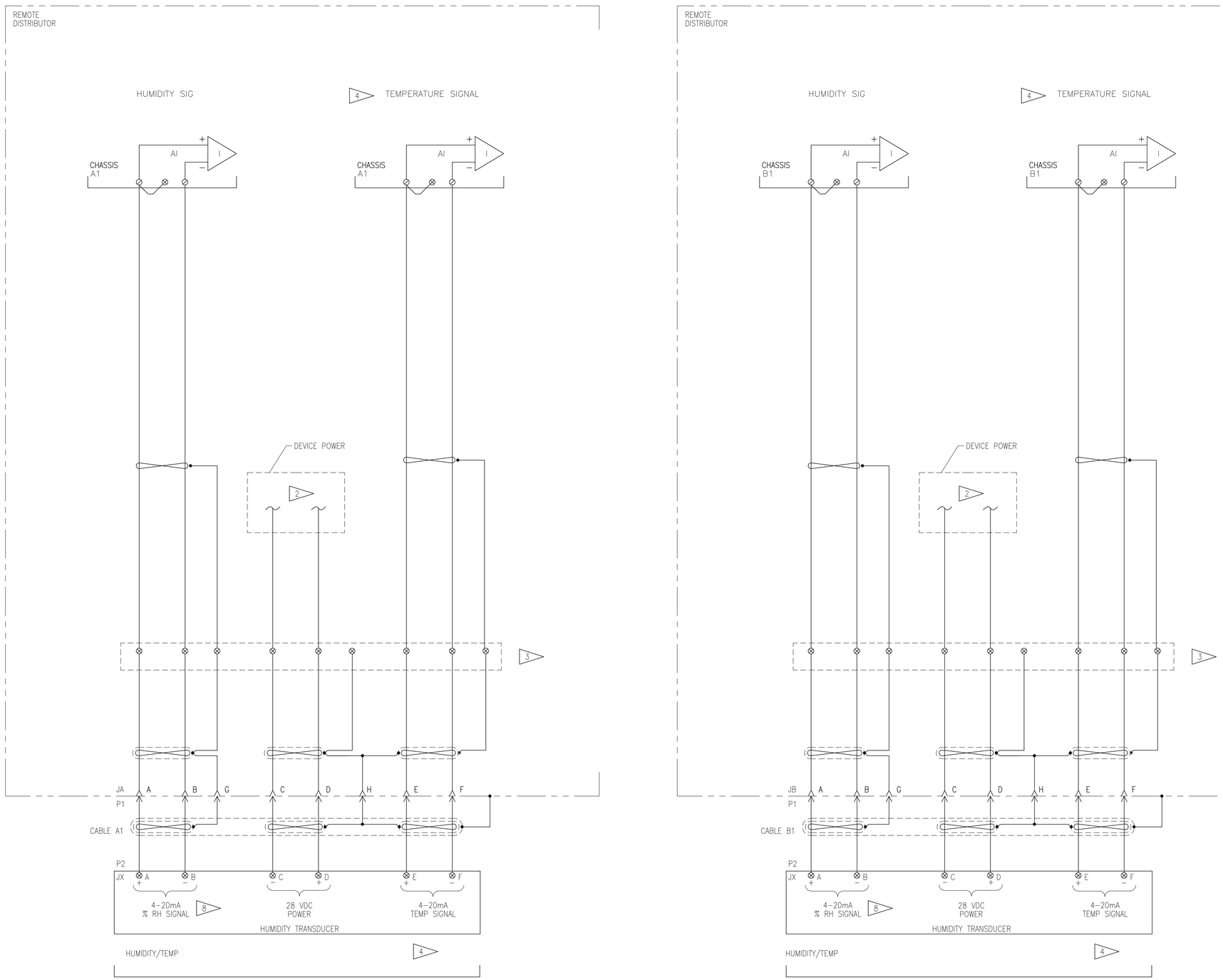

NOTES:

1. THIS SCHEMATIC IS TO BE USED IN CONJUNCTION WITH THE PLC AND REMOTE DISTRIBUTOR TAG INDEX TABLES. WIRING TERMINATIONS AND INTERFACE CONNECTOR ASSIGNMENTS ARE DEFINED IN THE REMOTE DISTRIBUTION CABINET TAG INDEX TABLES.

2. REFERENCE REMOTE I/O ENCLOSURE DEVICE POWER SCHEDULES FOR DEVICE POWER SUPPLY CIRCUIT AND/OR POWER CONNECTION DETAILS.

3. THE CONTRACTOR SHALL USE THE EXISTING FIELD INTERFACE TERMINAL BLOCKS FOR CONNECTION OF THE PLC I/O TO THE ENCLOSURE INTERFACE CONNECTORS. IF ADDITIONAL TERMINAL BLOCKS ARE REQUIRED THE CONTRACTOR SHALL PROVIDE AND INSTALL.

4. NOT ALL HUMIDITY TRANSDUCERS USE THE SECOND ANALOG OUTPUT TEMPERATURE SIGNAL. FOR HUMIDITY TRANSDUCERS THAT DO NOT, THE PLC CONNECTION SHALL NOT BE WIRED AND SIGNAL CONNECTION AT THE TRANSDUCER SHALL BE SPARE.

5. THIS HUMIDITY TEMPERATURE SIGNAL SCHEMATIC SHALL BE USED FOR ALL REDUNDANT PAIRS OF HUMIDITY/TEMPERATURE TRANSDUCERS.

6. FOR THE SINGLE FAULT TOLERANCE REQUIRED BY NASA. ONE HUMIDITY/TEMPERATURE TRANSDUCER SHALL BE CONNECTED TO SYSTEM A AND THE OTHER TO SYSTEM B.

7. THE CONTRACTOR SHALL BE RESPONSIBLE FOR PROGRAMMING THE HUMIDITY AND/OR TEMPERATURE MEASUREMENT CHANGE ON A FAILURE OF A HUMIDITY/TEMP TRANSDUCER.

8. THE CALCULATION OF ABSOLUTE HUMIDITY SHALL BE PERFORMED IN THE ECS CONTROL PLC AND NOT WITHIN THE VAISALA TRANSMITTER.

SYM	ZONE	DESCRIPTION	DATE	APPROVED
REVISIONS				

JACOBS
Jacobs Technology Inc.

SIGNATURES		DATE
DRAWN	M. HENNIGH	3/07/14
CHECKED	J. WHITEFORD	3/07/14
SUBMITTED	S. RITTER	3/07/14
ST OF LICENSURE: TN LICENSE NO: 00110556		
APPROVED	G. WARD	3/07/14
	S. HUNT	3/07/14

NATIONAL AERONAUTICS AND SPACE ADMINISTRATION
JOHN F. KENNEDY SPACE CENTER, NASA
KENNEDY SPACE CENTER, FLORIDA

KSC LAUNCH PAD 39-B
ENVIRONMENTAL CONTROL SYSTEM (ECS) REFURBISHMENT

INSTRUMENTATION
GENERAL REDUNDANT
HUMIDITY SIGNAL SCHEMATIC

FILE NO.	SIZE	DWG.NO.	REV
	F	79K39602	
PCN. NO. 98898		SHEET 170 OF 187	

I-087

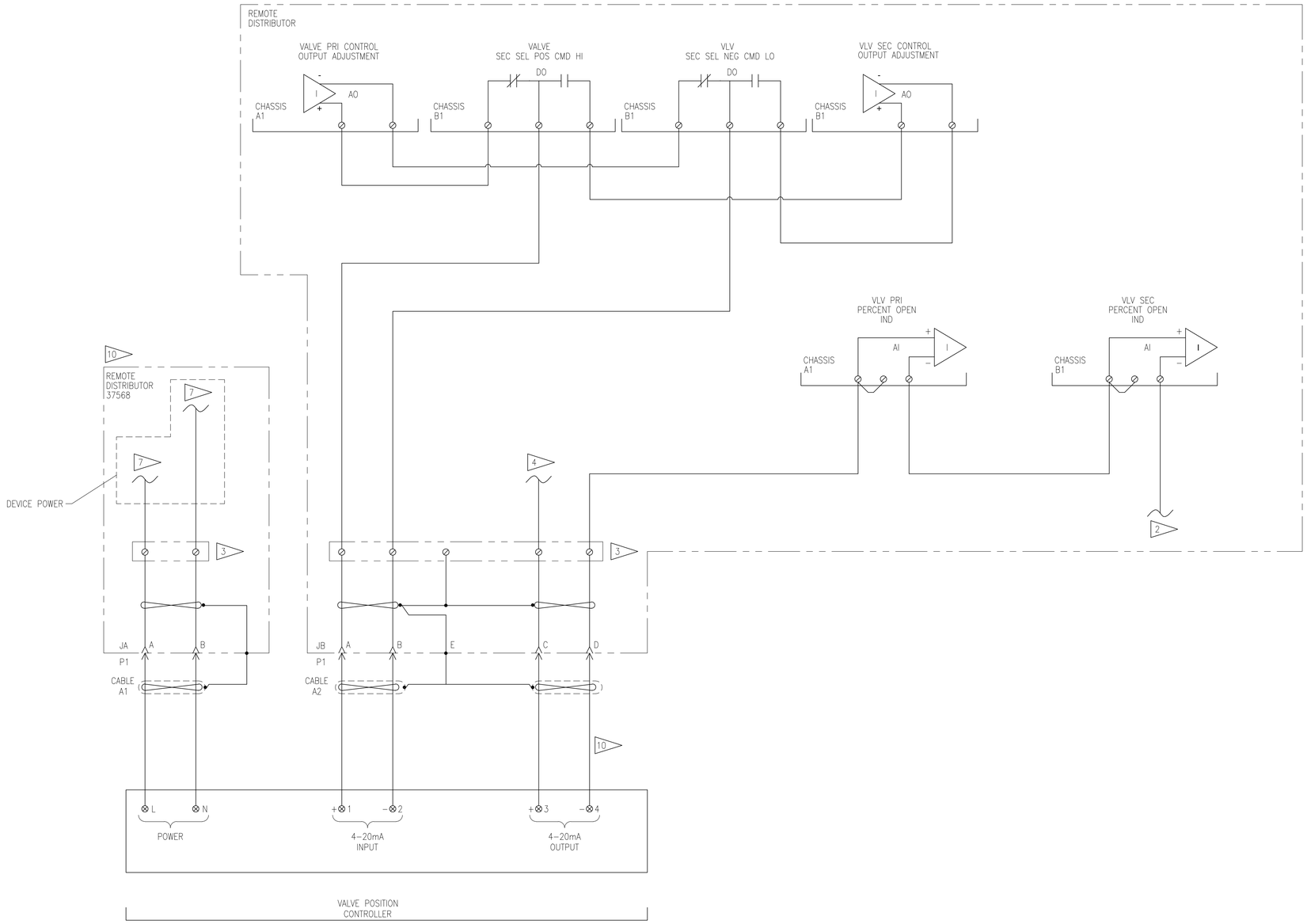

NOTES:

1. THIS SCHEMATIC IS TO BE USED IN CONJUNCTION WITH THE PLC AND REMOTE DISTRIBUTOR TAG INDEX TABLES. WIRING TERMINATIONS AND INTERFACE CONNECTOR ASSIGNMENTS ARE DEFINED IN THE REMOTE DISTRIBUTION CABINET TAG INDEX TABLES.

2. TO POWER RETURN/NEUTRAL LOCATED IN REMOTE DISTRIBUTOR ENCLOSURE.

3. THE CONTRACTOR SHALL USE THE EXISTING FIELD INTERFACE TERMINAL BLOCKS FOR CONNECTION OF THE PLC I/O TO THE ENCLOSURE INTERFACE CONNECTORS. IF ADDITIONAL TERMINAL BLOCKS ARE REQUIRED THE CONTRACTOR SHALL PROVIDE AND INSTALL.

4. TO SIGNAL/CONTROL POWER SOURCE BUS LOCATED IN REMOTE DISTRIBUTOR ENCLOSURE.

5. THIS SCHEMATIC SHALL BE USED FOR TEMPERATURE CONTROL AND FLOW CONTROL VALVES:
   - TCV–517
   - TCV–518
   - TCV–519
   - FCV–205
   - FCV–215
   - FCV–225
   - FCV–235
   - FCV–245 (SPARE DUCT 1)
   - FCV–255
   - FCV–265
   - FCV–275
   - FCV–285 (SPARE DUCT 2)
   - FCV–295 (SPARE DUCT 3)
   - FCV–305
   - FCV–315 (SPARE DUCT 4)
   - FCV–415

6. FOR THE SINGLE FAULT TOLERANCE REQUIRED BY NASA. THE SINGLE FAIL IN PLACE CONTROL VALVE SHALL BE WIRED SO THAT:
   - EITHER SYSTEM A OR SYSTEM B CAN HAVE FULL CONTROL OVER THE VALVE
   - BOTH SYSTEM A AND SYSTEM B RECEIVE THE VALVES POSITION FEEDBACK
   - ON A SYSTEM A OR SYSTEM B FAULT, CONTROL OF THE VALVE WILL AUTOMATICALLY SWITCH TO THE NON–FAULTED SYSTEM.

7. REFERENCE SHEET I–060 FOR DEVICE POWER SUPPLY CIRCUIT AND/OR POWER CONNECTION DETAILS.

8. THE VALVE CONTROL SCHEMATIC SHOWN DETAILS SYSTEM A AS THE PRIMARY AND SYSTEM B AS THE SECONDARY. FOR VALVES WHERE SYSTEM B IS THE PRIMARY, SWAP ALL OCCURRENCES OF A1 AND B1.

9. FOR THIS VALVE THE CONTRACTOR SHALL BE RESPONSIBLE FOR PROGRAMMING THE CONTROL CHANGE ON A VALVE FAILURE SO THAT THE CONTROL CHANGE RESULTS IN A BUMPLESS TRANSFER OF THE FLOW/TEMPERATURE CONTROL TO THE NON–FAULTED VALVE.

10. COOLING TOWER BYPASS VALVE FCV–415 IS A PNEUMATICALLY CONTROLLED VALVE WITH ONLY A 4–20mA CONTROL SIGNAL. THIS VALVE DOES NOT USE THE FEEDBACK SIGNAL AND DOES NOT REQUIRE A SEPARATE SOURCE OF POWER. VALVE FEEDBACKS AND POWER CONNECTIONS DO NOT APPLY TO FCV–415.

SYM	ZONE	DESCRIPTION	DATE	APPROVED
REVISIONS				

JACOBS
Jacobs Technology Inc.

SIGNATURES		DATE
DRAWN	M. HENNIGH	3/07/14
CHECKED	J. WHITEFORD	3/07/14
SUBMITTED	S. RITTER	3/07/14
ST OF LICENSURE: TN LICENSE NO: 00110556		
APPROVED	G. WARD	3/07/14
	S. HUNT	3/07/14

NATIONAL AERONAUTICS AND SPACE ADMINISTRATION
JOHN F. KENNEDY SPACE CENTER, NASA
KENNEDY SPACE CENTER, FLORIDA

KSC LAUNCH PAD 39-B
ENVIRONMENTAL CONTROL SYSTEM (ECS) REFURBISHMENT
INSTRUMENTATION
4-20mA REDUNDANT SINGLE
CONTROL VALVE SCHEMATIC

FILE NO.	SIZE	DWG.NO.	REV
	F	79K39602	

PCN. NO. 98898 SHEET 171 OF 187

I-088

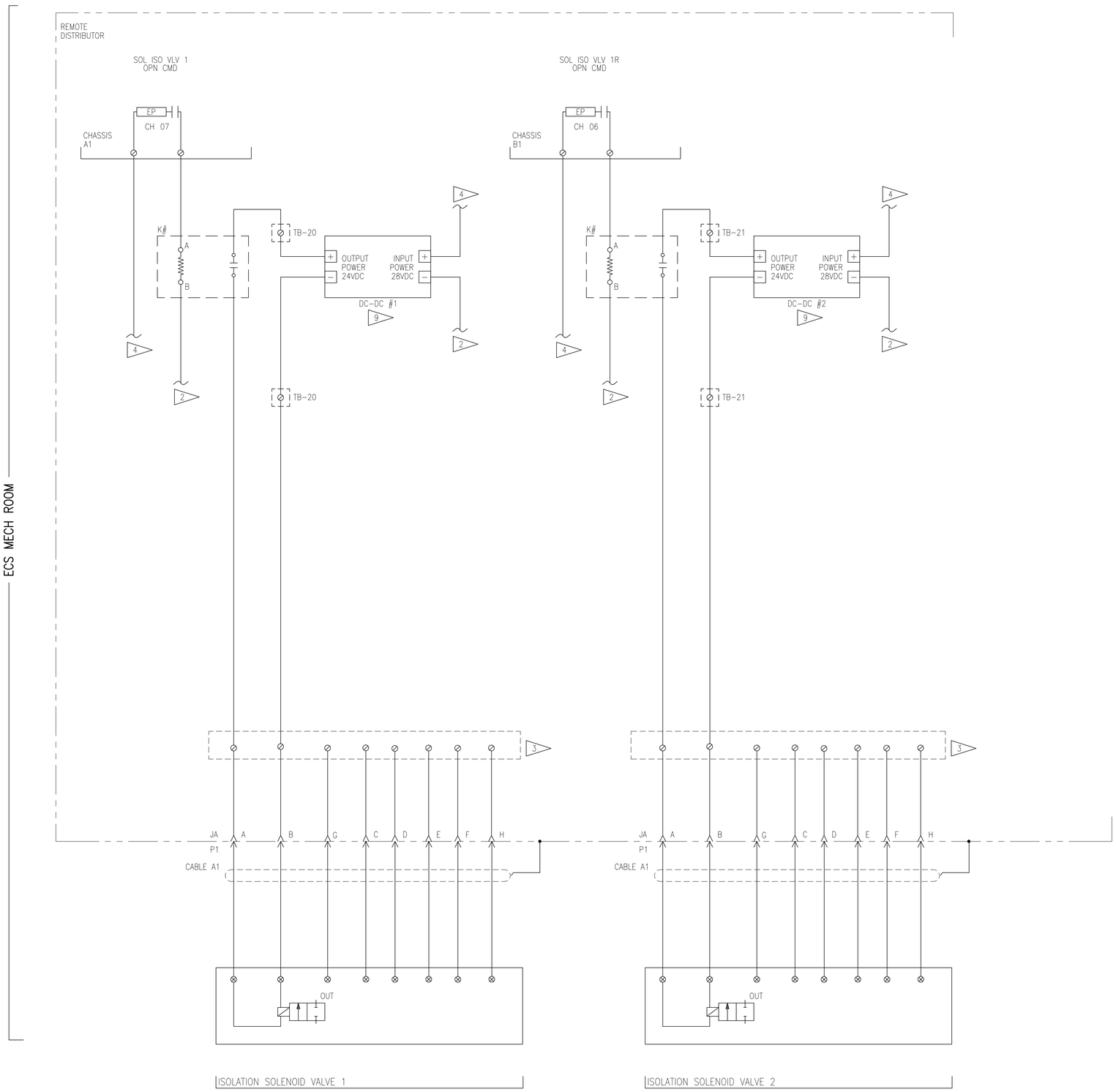

NOTES:

1. THIS SCHEMATIC IS TO BE USED IN CONJUNCTION WITH THE PLC AND REMOTE DISTRIBUTOR TAG INDEX TABLES. WIRING TERMINATIONS AND INTERFACE CONNECTOR ASSIGNMENTS ARE DEFINED IN THE REMOTE DISTRIBUTION CABINET TAG INDEX TABLES.

2. TO POWER RETURN/NEUTRAL LOCATED IN REMOTE DISTRIBUTOR ENCLOSURE.

3. THE CONTRACTOR SHALL USE THE EXISTING FIELD INTERFACE TERMINAL BLOCKS FOR CONNECTION OF THE PLC I/O TO THE ENCLOSURE INTERFACE CONNECTORS. IF ADDITIONAL TERMINAL BLOCKS ARE REQUIRED THE CONTRACTOR SHALL PROVIDE AND INSTALL.

4. TO SIGNAL/CONTROL POWER SOURCE BUS LOCATED IN REMOTE DISTRIBUTOR ENCLOSURE.

5. THIS HUMIDITY SOLENOID VALVE SCHEMATIC SHALL BE USED FOR VALVES:
   - SOV-214 A & B
   - SOV-224 A & B
   - SOV-234 A & B
   - SOV-274 A & B
   - SOV-304 A & B

6. FOR THE SINGLE FAULT TOLERANCE REQUIRED BY NASA. THE REDUNDANT PAIR OF SOLENOID VALVES SHALL BE WIRED SO THAT:
   - SOLENOID VALVE 1 IS WIRED TO SYSTEM A AND SOLENOID 2 IS WIRED TO SYSTEM B
   - ON A FAILURE OF SYSTEM A OR B, THE VALVE ON THE FAILED SYSTEM AUTOMATICALLY CLOSES AND THE REDUNDANT VALVE CAN BE CONTROLLED BY THE NON-FAULTED SYSTEM

7. THE CONTRACTOR SHALL BE RESPONSIBLE FOR PROGRAMMING THE HUMIDITY CONTROL SOLENOID VALVES WITH THE HUMIDITY CONTROL VALVES FOR THE BUMPLESS TRANSFER OF HUMIDITY CONTROL.

8. REFERENCE SHEET I-104 FOR DUCT HUMIDITY CONTROL SEQUENCE OF OPERATIONS.

9. REFERENCE REMOTE DISTRIBUTOR LAYOUTS I-037 AND I-051 FOR DC-DC CONVERTER MOUNTING DETAILS.

SYM	ZONE	DESCRIPTION	DATE	APPROVED
REVISIONS				

JACOBS
Jacobs Technology Inc.

NATIONAL AERONAUTICS AND SPACE ADMINISTRATION
JOHN F. KENNEDY SPACE CENTER, NASA
KENNEDY SPACE CENTER, FLORIDA

SIGNATURES		DATE
DRAWN	M. HENNIGH	3/07/14
CHECKED	J. WHITEFORD	3/07/14
SUBMITTED	S. RITTER	3/07/14
ST OF LICENSURE: TN LICENSE NO: 00110556		
APPROVED	G. WARD	3/07/14
	S. HUNT	3/07/14

KSC LAUNCH PAD 39-B
ENVIRONMENTAL CONTROL SYSTEM (ECS) REFURBISHMENT
INSTRUMENTATION
24VDC REDUNDANT DUAL ISOLATION SOLENOID VALVE SCHEMATIC

FILE NO. | SIZE F | DWG.NO. 79K39602 | REV
PCN. NO. 98898 | SHEET 172 OF 187

I-089

THIS SHEET LEFT INTENTIONALLY BLANK

SYM	ZONE	DESCRIPTION	DATE	APPROVED
REVISIONS				

JACOBS
Jacobs Technology Inc.

SIGNATURES		DATE
DRAWN	M. HENNIGH	3/07/14
CHECKED	J. WHITEFORD	3/07/14
SUBMITTED	S. RITTER	3/07/14
ST OF LICENSURE: TN LICENSE NO: 00110556		
APPROVED	G. WARD	3/07/14
	S. HUNT	3/07/14

NATIONAL AERONAUTICS AND SPACE ADMINISTRATION
JOHN F. KENNEDY SPACE CENTER, NASA
KENNEDY SPACE CENTER, FLORIDA

KSC LAUNCH PAD 39-B
ENVIRONMENTAL CONTROL SYSTEM (ECS) REFURBISHMENT
INSTRUMENTATION
GENERAL
CONTROLS SCHEMATIC

FILE NO.	SIZE	DWG.NO.	REV
I-090	F	79K39602	
PCN. NO. 98898		SHEET 173 OF 187	

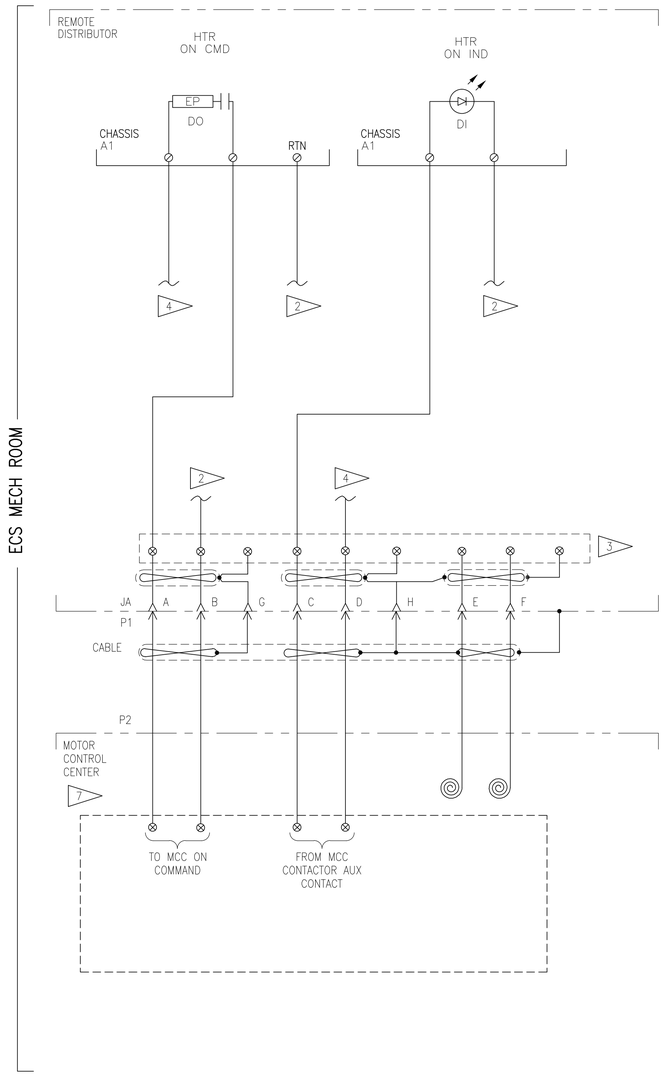

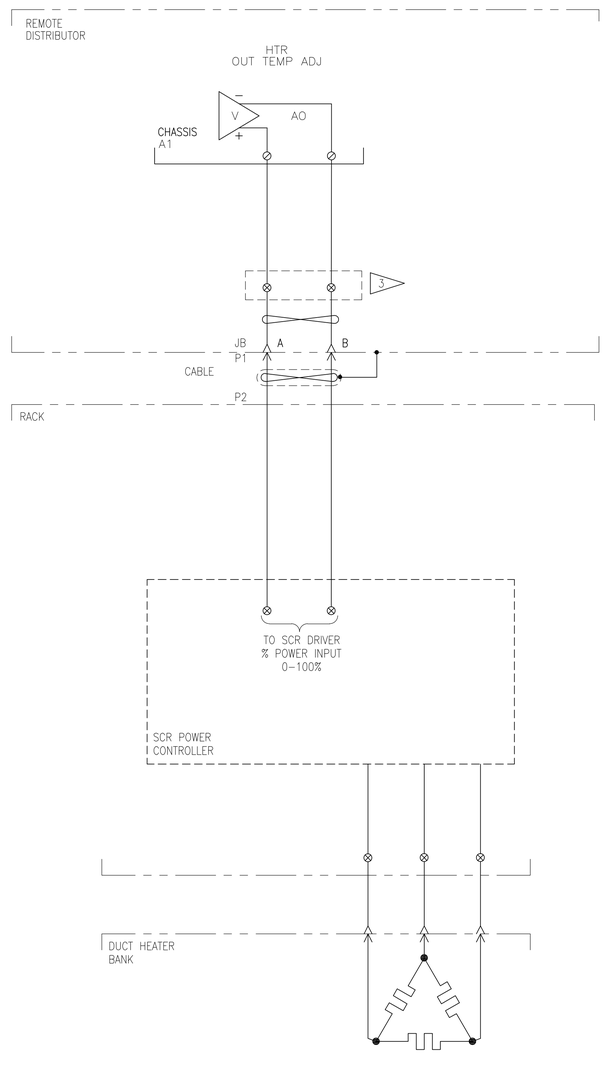

NOTES:

1. THIS SCHEMATIC IS TO BE USED IN CONJUNCTION WITH THE PLC AND REMOTE DISTRIBUTOR TAG INDEX TABLES. WIRING TERMINATIONS AND INTERFACE CONNECTOR ASSIGNMENTS ARE DEFINED IN THE REMOTE DISTRIBUTION CABINET TAG INDEX TABLES.

2. TO POWER RETURN/NEUTRAL LOCATED IN REMOTE DISTRIBUTOR ENCLOSURE.

3. THE CONTRACTOR SHALL USE THE EXISTING FIELD INTERFACE TERMINAL BLOCKS FOR CONNECTION OF THE PLC I/O TO THE ENCLOSURE INTERFACE CONNECTORS. IF ADDITIONAL TERMINAL BLOCKS ARE REQUIRED THE CONTRACTOR SHALL PROVIDE AND INSTALL.

4. TO SIGNAL/CONTROL POWER SOURCE BUS LOCATED IN REMOTE DISTRIBUTOR ENCLOSURE.

5. THE CONTRACTOR SHALL BE RESPONSIBLE FOR PROGRAMMING THE CONTROL CHANGE ON A FAILURE OF A HEATER SCR SUCH THAT WHEN ONE HEATER FAILS, THE NON–FAULTED HEATER WILL TURN ON TO TAKE THE LOAD OF THE FAILED HEATER SCR'S.

6. THIS HEATER SCR'S CONTROL SCHEMATIC SHALL BE USED FOR HEATER SCR'S:
   - SCR–201 A & B
   - SCR–211 A & B
   - SCR–221 A & B
   - SCR–231 A & B
   - SCR–241 A & B
   - SCR–251 A & B
   - SCR–261 A & B
   - SCR–271 A & B
   - SCR–281 A & B
   - SCR–291 A & B
   - SCR–301 A & B
   - SCR–311 A & B

7. REFERENCE ELECTRICAL SHEET E–015 FOR MCC HEATER SCR'S CONTROL SCHEMATICS.

8. FOR THE SINGLE FAULT TOLERANCE REQUIRED BY NASA. THE HEATER SCR PAIRS SHALL BE WIRED SO THAT:
   - EACH HEATER SCR IN THE PAIR SHALL BE WIRED TO DIFFERENT SYSTEMS.
   - THE HEATER SCR'S ON COMMAND AND INDICATION SHALL BE WIRED TO THE MCC WHICH PROVIDES POWER TO THE SCR.

9. THIS WIRING SCHEMATIC SHOWS THE HEATER SCR'S WIRED AS PRIMARY ON SYSTEM A. FOR HEATER SCR'S WIRED AS PRIMARY ON SYSTEM B, SWAP ALL OCCURRENCES OF A1 AND B1.

SYM	ZONE	DESCRIPTION	DATE	APPROVED
REVISIONS				

JACOBS
Jacobs Technology Inc.

SIGNATURES		DATE
DRAWN	M. HENNIGH	3/07/14
CHECKED	J. WHITEFORD	3/07/14
SUBMITTED	S. RITTER	3/07/14
ST OF LICENSURE: TN LICENSE NO: 00110556		
APPROVED	G. WARD	3/07/14
	S. HUNT	3/07/14

NATIONAL AERONAUTICS AND SPACE ADMINISTRATION
JOHN F. KENNEDY SPACE CENTER, NASA
KENNEDY SPACE CENTER, FLORIDA

KSC LAUNCH PAD 39-B
ENVIRONMENTAL CONTROL SYSTEM (ECS) REFURBISHMENT
INSTRUMENTATION
GENERAL CONTACTOR FED HEATER
SCR CONTROLS SCHEMATIC

FILE NO.	SIZE	DWG.NO.	REV
I-091	F	79K39602	
PCN. NO. 98898		SHEET 174 OF 187	

ECS CONTROL ROOM

REMOTE
DISTRIBUTOR
35427

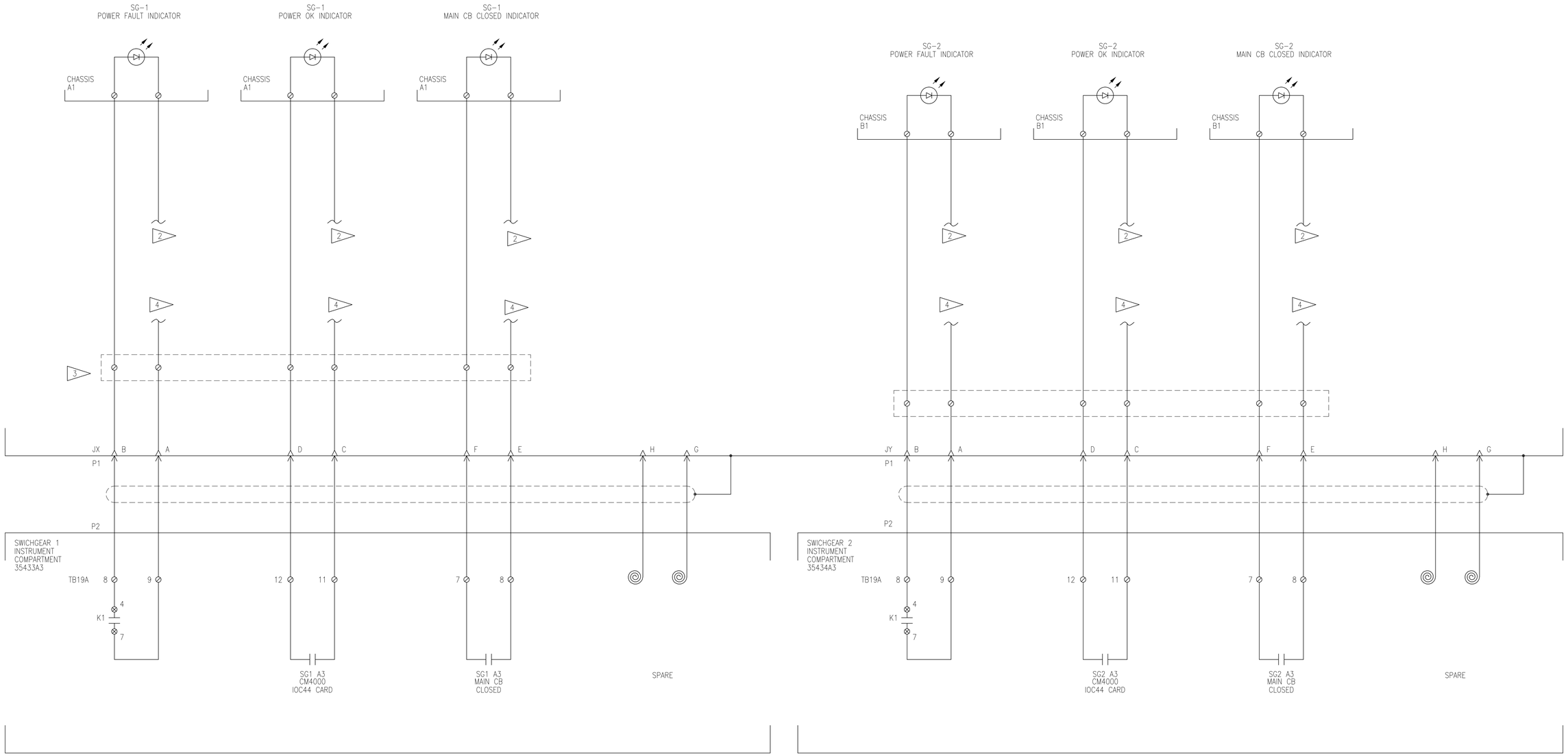

NOTES:

1. THIS SCHEMATIC IS TO BE USED IN CONJUNCTION WITH THE PLC AND REMOTE DISTRIBUTOR TAG INDEX TABLES. WIRING TERMINATIONS AND INTERFACE CONNECTOR ASSIGNMENTS ARE DEFINED IN THE REMOTE DISTRIBUTION CABINET TAG INDEX TABLES.

2. TO POWER RETURN/NEUTRAL LOCATED IN REMOTE DISTRIBUTOR ENCLOSURE.

3. THE CONTRACTOR SHALL USE THE EXISTING FIELD INTERFACE TERMINAL BLOCKS FOR CONNECTION OF THE PLC I/O TO THE ENCLOSURE INTERFACE CONNECTORS. IF ADDITIONAL TERMINAL BLOCKS ARE REQUIRED THE CONTRACTOR SHALL PROVIDE AND INSTALL.

4. TO SIGNAL/CONTROL POWER SOURCE BUS LOCATED IN REMOTE DISTRIBUTOR ENCLOSURE.

5. THIS SCHEMATIC SHALL BE USED FOR THE POWER MONITORING FEEDBACKS FOR SWITCHGEAR #1 AND SWITCHGEAR #2.

6. SWITCHGEAR #1 AND SWITCHGEAR #2 POWER INDICATORS SHALL BE WIRED INTO SEPARATE SYSTEMS.

SYM	ZONE	DESCRIPTION	DATE	APPROVED
REVISIONS				

JACOBS
Jacobs Technology Inc.

SIGNATURES		DATE
DRAWN	M. HENNIGH	3/07/14
CHECKED	J. WHITEFORD	3/07/14
SUBMITTED	S. RITTER	3/07/14
ST OF LICENSURE: TN LICENSE NO: 00110556		
APPROVED	G. WARD	3/07/14
	S. HUNT	3/07/14

NATIONAL AERONAUTICS AND SPACE ADMINISTRATION
JOHN F. KENNEDY SPACE CENTER, NASA
KENNEDY SPACE CENTER, FLORIDA

KSC LAUNCH PAD 39-B
ENVIRONMENTAL CONTROL SYSTEM (ECS) REFURBISHMENT
INSTRUMENTATION
SWITCHGEAR AC POWER MONITOR
SCHEMATIC

FILE NO.	SIZE	DWG.NO.	REV
I-092	F	79K39602	
PCN. NO. 98898		SHEET 175 OF 187	

ECS CONTROL ROOM

ECS MACH ROOM

GSP 34609

SYSTEM A

+28 JX P2 B

RTN E

SYSTEM B

RTN JY P1 E

+28 B

REMOTE DISTRIBUTOR

P2 JA E

P2 B

P2 JB B

E

GND STUD

D160A/+D100

PDB1

PDB2

PDB3

D160B/+D200

PDB4

DISC1 25A DISCONNECT

DISC2 25A DISCONNECT

TB3 D1R 1 2 5 10 15 17 18 20 25 30 34 35

TB10 PE9 1 2 3 4 5 6

TB2 EGND

TB9 EGND

TB4 EGND

TB5 EGND

R1 15KΩ

R2 5KΩ

R3 15KΩ

R4 5KΩ

TB1 +D110 1 2 3 4 5A 5B 6B 6A

TB2 +D210 1 2 3 4 5A 5B 6A 6B

TB3 D1R 1

TB3 D1R 2

GSP BUS A VDC

GSP BUS B VDC

CHASSIS A1

CHASSIS B1

AI

V

CB1 10A

CB2 10A

CB3 8A

CB4 10A

CB5 10A

CB6 8A

CHASSIS A1

CHASSIS B1

PS + – GND

17 SLOTS

STUD

GND TAP

TB10 PE3 4 2

TB10 PE3 5 3

TB3 D1R 2

TB3 D1R 8

K1

K2

K3

K4

TB6 +D120 1 THRU 5

TB7 +D121 1 THRU 5

TB8 +D220 1 THRU 5

TB9 +D221 1 THRU 5

D120 INSTR BUS PWR ON CMD

D220 INSTR BUS PWR ON CMD

EP DO RTN

TB3 D1R 4

TB3 D1R 10

D120 INSTR BUS POWER ON IND

D121 CMD BUS POWER ON IND

D220 INSTR BUS POWER ON IND

D221 CMD BUS POWER ON IND

DI

TB3 D1R 6

TB3 D1R 12

D121 CMD BUS PWR ON CMD

D221 CMD BUS PWR ON CMD

TB3 D1R 5

TB3 D1R 11

NOTES:

1. THIS SCHEMATIC IS TO BE USED IN CONJUNCTION WITH THE PLC AND REMOTE DISTRIBUTOR TAG INDEX TABLES. WIRING TERMINATIONS AND INTERFACE CONNECTOR ASSIGNMENTS ARE DEFINED IN THE REMOTE DISTRIBUTION CABINET TAG INDEX TABLES.
2. THIS REMOTE I/O DC POWER DISTRIBUTION SCHEMATIC IS REPRESENTATIVE OF ALL DC DISTRIBUTION FOR THE EXISTING ECS REMOTE DISTRIBUTION ENCLOSURES. THE CONTRACTOR SHALL ADHERE TO THIS DRAWING FOR THE DC POWER DISTRIBUTION WITHIN NEW DISTRIBUTION ENCLOSURES UNLESS OTHERWISE SPECIFIED.
3. REFERENCE DRAWING I-014 FOR NEW AND EXISTING GSP POWER PANEL DISTRIBUTION TO ALL ECS DISTRIBUTORS.
4. CONTRACTOR SHALL SUPPLY TEMPORARY 28VDC SUPPLIED TO ENCLOSURE 37462. REFERENCE SHEET I-014 FOR REMOTE I/O ENCLOSURE 28VDC DISTRIBUTION PLAN.

SYM	ZONE	DESCRIPTION	DATE	APPROVED
REVISIONS				

JACOBS
Jacobs Technology Inc.

SIGNATURES		DATE
DRAWN	M. HENNIGH	3/07/14
CHECKED	J. WHITEFORD	3/07/14
SUBMITTED	S. RITTER	3/07/14
ST OF LICENSURE: TN LICENSE NO: 00110556		
APPROVED	G. WARD	3/07/14
	S. HUNT	3/07/14

NATIONAL AERONAUTICS AND SPACE ADMINISTRATION
JOHN F. KENNEDY SPACE CENTER, NASA
KENNEDY SPACE CENTER, FLORIDA

KSC LAUNCH PAD 39-B
ENVIRONMENTAL CONTROL SYSTEM (ECS) REFURBISHMENT
INSTRUMENTATION
REMOTE I/O DC POWER DISTRIBUTION
SCHEMATIC SHEET 1

FILE NO.	SIZE	DWG.NO.	REV
	F	79K39602	
PCN. NO. 98898		SHEET 176 OF 187	

I-093

REMOTE DISTRIBUTOR

ECS MACHINE ROOM

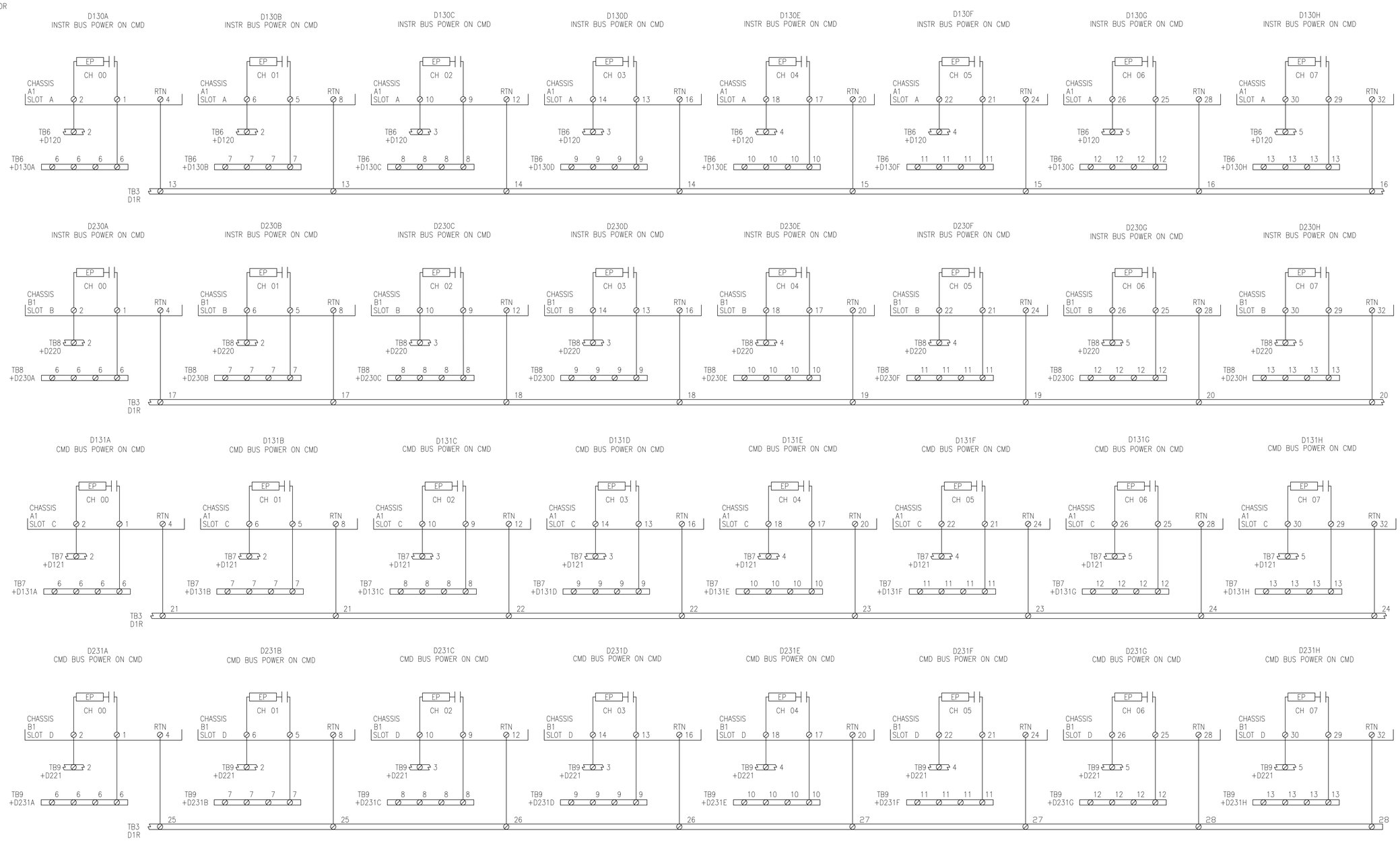

NOTES:

1. THIS SCHEMATIC IS TO BE USED IN CONJUNCTION WITH THE PLC AND REMOTE DISTRIBUTOR TAG INDEX TABLES. WIRING TERMINATIONS AND INTERFACE CONNECTOR ASSIGNMENTS ARE DEFINED IN THE REMOTE DISTRIBUTION CABINET TAG INDEX TABLES.
2. THIS REMOTE I/O DC POWER DISTRIBUTION SCHEMATIC IS REPRESENTATIVE OF ALL DC DISTRIBUTION FOR THE EXISTING ECS REMOTE DISTRIBUTION ENCLOSURES. THE CONTRACTOR SHALL ADHERE TO THIS DRAWING FOR THE DC POWER DISTRIBUTION WITHIN NEW DISTRIBUTION ENCLOSURES SPECIFIED UNLESS OTHERWISE STATED.
3. FOR THE SINGLE FAULT TOLERANCE REQUIRED BY NASA, INSTRUMENT BUS AND COMMAND BUS POWER CONNECTIONS SHALL ADHERE TO THE FOLLOWING CRITERIA:
   - SYSTEM A INSTRUMENT AND COMMAND POWER MUST ONLY BE USED FOR CONNECTION OF INSTRUMENTATION AND PLC I/O CONNECTIONS TO SYSTEM A
   - SYSTEM B INSTRUMENT AND COMMAND POWER MUST ONLY BE USED FOR CONNECTION OF INSTRUMENTATION AND PLC I/O CONNECTIONS TO SYSTEM B
   - ALTHOUGH ALL OF THE TB3DIR CONNECTIONS ARE TIED TOGETHER BETWEEN SYSTEMS A AND SYSTEM B. THE CONTRACTOR SHALL ORGANIZE ALL DC RETURNS TO FACILITATE WIRING AND NEATNESS OF THE ENCLOSURE.
   - THE CONTRACTOR SHALL NOT CONNECT A DEVICE OR GROUP OF DEVICES WHICH EXCEED MORE THAN 80% OF THE MAX CONTINUOUS CURRENT SPECIFICATION FOR ANY ALLEN BRADLEY 1756–OB8EI CHANNEL OR MODULE.
   - FOR DEVICES WHICH ARE CONNECTED AND SWITCHED BETWEEN A AND B SYSTEMS BOTH THE POSITIVE AND RETURN FROM EACH SYSTEM SHALL BE SEPARATED. EACH COMMAND OR INSTRUMENTATION POWER WIRE MUST HAVE ITS OWN RETURN WIRE UNLESS STATED OTHERWISE.

SYM	ZONE	DESCRIPTION	DATE	APPROVED
REVISIONS				

JACOBS
Jacobs Technology Inc.

SIGNATURES		DATE
DRAWN	M. HENNIGH	3/07/14
CHECKED	J. WHITEFORD	3/07/14
SUBMITTED	S. RITTER	3/07/14
ST OF LICENSURE: TN LICENSE NO: 00110556		
APPROVED	G. WARD	3/07/14
	S. HUNT	3/07/14

NATIONAL AERONAUTICS AND SPACE ADMINISTRATION
JOHN F. KENNEDY SPACE CENTER, NASA
KENNEDY SPACE CENTER, FLORIDA

KSC LAUNCH PAD 39-B
ENVIRONMENTAL CONTROL SYSTEM (ECS) REFURBISHMENT
INSTRUMENTATION
REMOTE I/O DC POWER DISTRIBUTION
SCHEMATIC SHEET 2

I-094

FILE NO. | SIZE F | DWG.NO. 79K39602 | REV
PCN. NO. 98898 | SHEET 177 OF 187

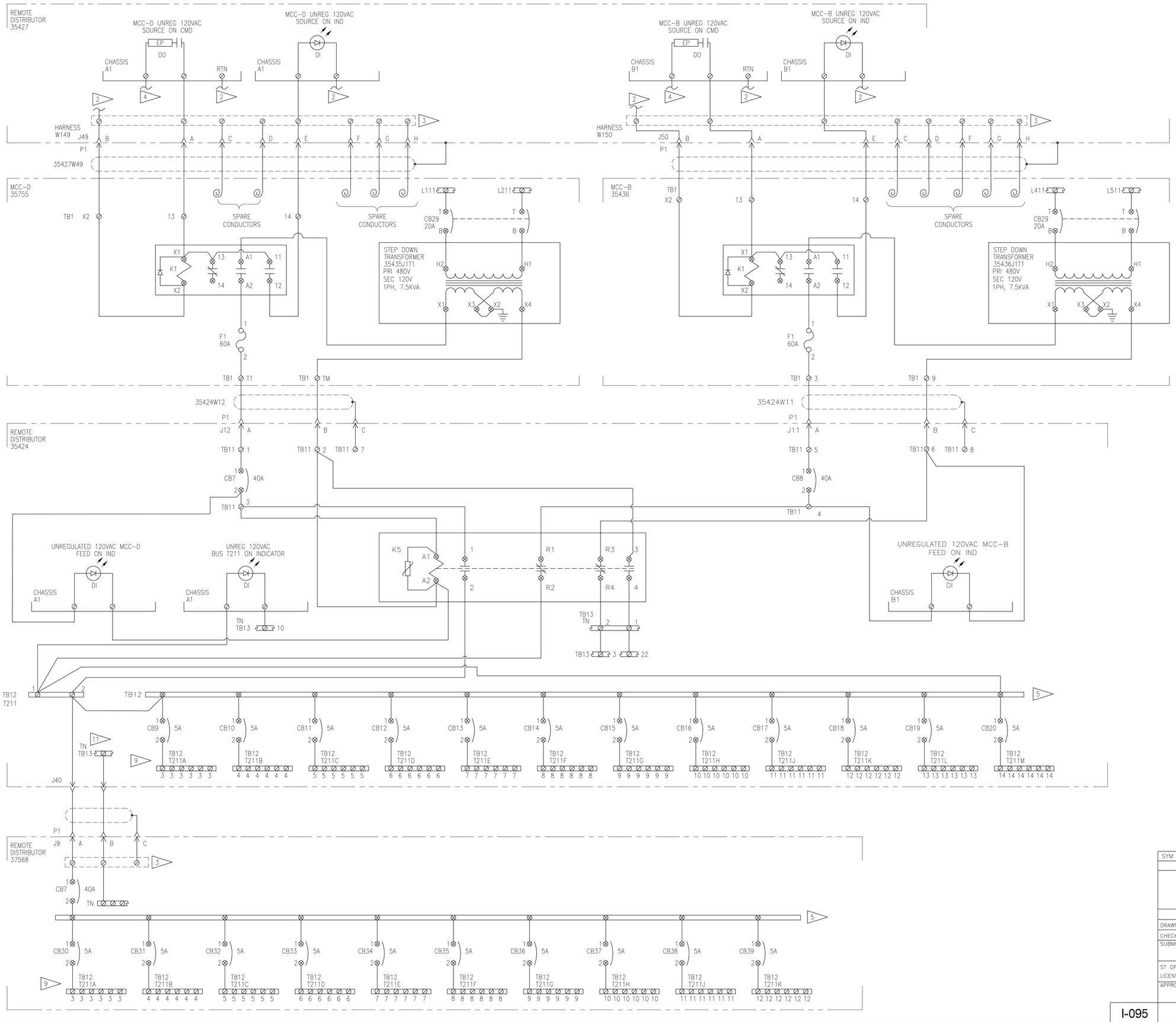

NOTES:

1. THIS SCHEMATIC IS TO BE USED IN CONJUNCTION WITH THE PLC AND REMOTE DISTRIBUTOR TAG INDEX TABLES. WIRING TERMINATIONS AND INTERFACE CONNECTOR ASSIGNMENTS ARE DEFINED IN THE REMOTE DISTRIBUTION CABINET TAG INDEX TABLES.
2. TO POWER RETURN/NEUTRAL LOCATED IN REMOTE DISTRIBUTOR ENCLOSURE.
3. THE CONTRACTOR SHALL USE THE EXISTING FIELD INTERFACE TERMINAL BLOCKS FOR CONNECTION OF THE PLC I/O TO THE ENCLOSURE INTERFACE CONNECTORS. IF ADDITIONAL TERMINAL BLOCKS ARE REQUIRED THE CONTRACTOR SHALL PROVIDE AND INSTALL.
4. TO SIGNAL/CONTROL POWER SOURCE BUS LOCATED IN REMOTE DISTRIBUTOR ENCLOSURE.
5. CIRCUIT BREAKER BUS BAR.
6. THIS SCHEMATIC SHALL BE USED FOR THE UNREGULATED 110VAC DISTRIBUTION TO THE ECS EQUIPMENT AND INSTRUMENTATION DETAILED IN THE INSTRUMENTATION DRAWINGS AND SPECIFICATIONS.
7. ALL WIRING ON THIS DRAWING IS CURRENTLY RUN AND TERMINATED. CONTRACTOR SHALL VERIFY THAT ALL TERMINATIONS ARE CORRECT PER THE REMOTE DISTRIBUTION ENCLOSURE TAG INDEXES AND THIS SCHEMATIC.
8. CONTRACTOR SHALL BE RESPONSIBLE FOR VALIDATION AND VERIFICATION OF ALL EQUIPMENT AND PLC I/O PARAMETERS ON THIS SHEET.
9. CONTRACTOR SHALL PROVIDE AND INSTALL ADDITIONAL DEVICE POWER BREAKERS AS REQUIRED TO CONNECT ANY NEW ECS INSTRUMENTATION SPECIFIED IN THE INSTRUMENTATION DRAWINGS AND SPECIFICATIONS.
10. THE UNREGULATED POWER SHALL ONLY BE USED FOR THE DEVICES SPECIFIED IN THE INSTRUMENTATION DRAWINGS. ANY ADDITIONAL DEVICE CONNECTION TO THE UNREGULATED 110VAC SHALL BE APPROVED BY THE NASA CONTRACTING OFFICER.
11. CONTRACTOR SHALL ADD ANY REQUIRED TERMINAL BLOCKS TO CONNECT THE UNREGULATED 110VAC BETWEEN TB12 AND CONNECTOR 35424-J40.

SYM	ZONE	DESCRIPTION	DATE	APPROVED
		REVISIONS		

JACOBS
Jacobs Technology Inc.

SIGNATURES		DATE
DRAWN	M. HENNIGH	3/07/14
CHECKED	J. WHITEFORD	3/07/14
SUBMITTED	S. RITTER	3/07/14
ST OF LICENSURE: TN LICENSE NO: 00110556		
APPROVED	G. WARD	3/07/14
	S. HUNT	3/07/14

NATIONAL AERONAUTICS AND SPACE ADMINISTRATION
JOHN F. KENNEDY SPACE CENTER, NASA
KENNEDY SPACE CENTER, FLORIDA

KSC LAUNCH PAD 39-B
ENVIRONMENTAL CONTROL SYSTEM (ECS) REFURBISHMENT

INSTRUMENTATION
REMOTE I/O 35424 UNREGULATED AC POWER SCHEMATIC

FILE NO.	SIZE	DWG.NO.	REV
	F	79K39602	
PCN. NO. 98898		SHEET 178 OF 187	

I-095

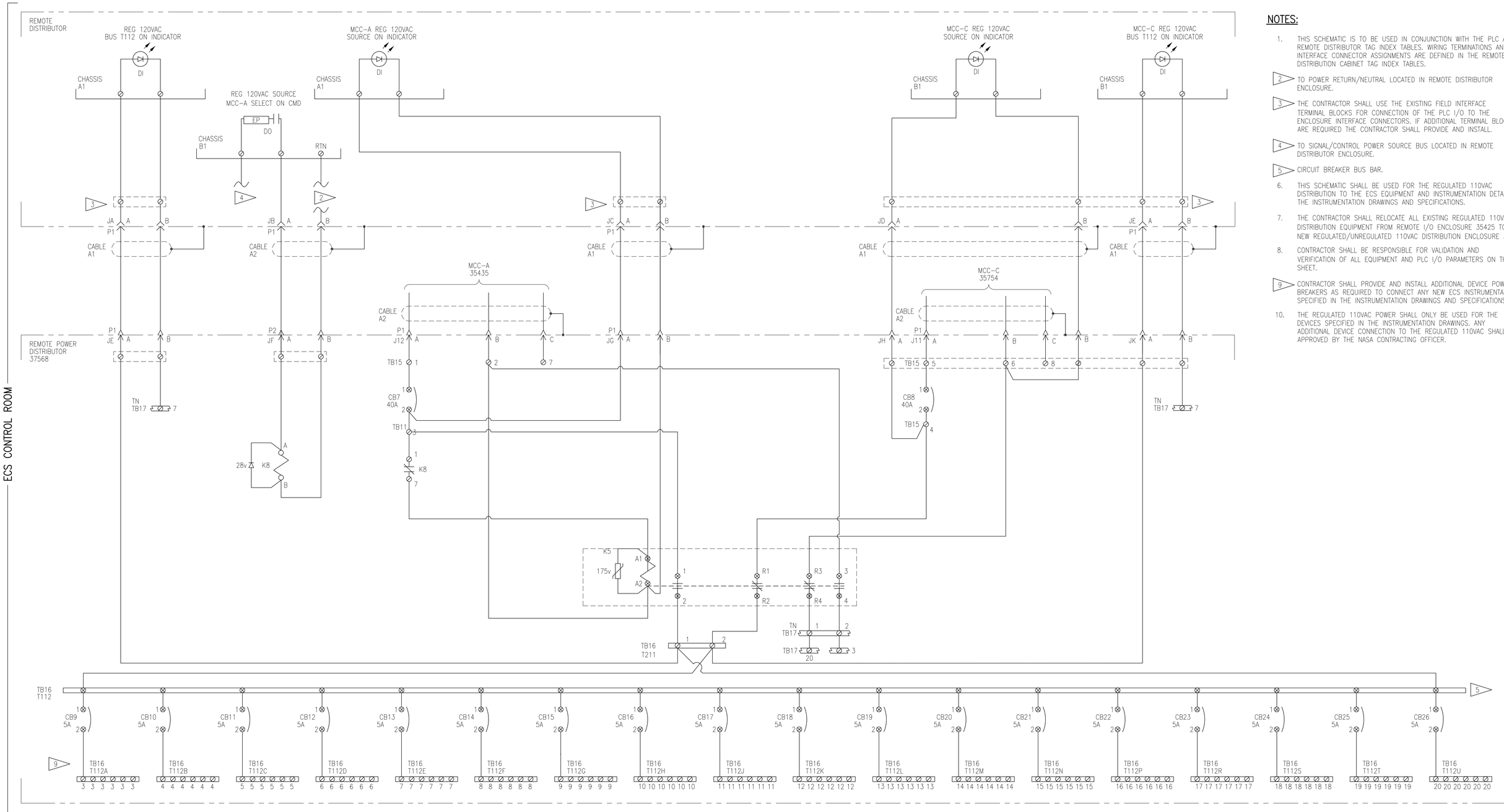

NOTES:

1. THIS SCHEMATIC IS TO BE USED IN CONJUNCTION WITH THE PLC AND REMOTE DISTRIBUTOR TAG INDEX TABLES. WIRING TERMINATIONS AND INTERFACE CONNECTOR ASSIGNMENTS ARE DEFINED IN THE REMOTE DISTRIBUTION CABINET TAG INDEX TABLES.
2. TO POWER RETURN/NEUTRAL LOCATED IN REMOTE DISTRIBUTOR ENCLOSURE.
3. THE CONTRACTOR SHALL USE THE EXISTING FIELD INTERFACE TERMINAL BLOCKS FOR CONNECTION OF THE PLC I/O TO THE ENCLOSURE INTERFACE CONNECTORS. IF ADDITIONAL TERMINAL BLOCKS ARE REQUIRED THE CONTRACTOR SHALL PROVIDE AND INSTALL.
4. TO SIGNAL/CONTROL POWER SOURCE BUS LOCATED IN REMOTE DISTRIBUTOR ENCLOSURE.
5. CIRCUIT BREAKER BUS BAR.
6. THIS SCHEMATIC SHALL BE USED FOR THE REGULATED 110VAC DISTRIBUTION TO THE ECS EQUIPMENT AND INSTRUMENTATION DETAILED IN THE INSTRUMENTATION DRAWINGS AND SPECIFICATIONS.
7. THE CONTRACTOR SHALL RELOCATE ALL EXISTING REGULATED 110VAC DISTRIBUTION EQUIPMENT FROM REMOTE I/O ENCLOSURE 35425 TO THE NEW REGULATED/UNREGULATED 110VAC DISTRIBUTION ENCLOSURE 37568.
8. CONTRACTOR SHALL BE RESPONSIBLE FOR VALIDATION AND VERIFICATION OF ALL EQUIPMENT AND PLC I/O PARAMETERS ON THIS SHEET.
9. CONTRACTOR SHALL PROVIDE AND INSTALL ADDITIONAL DEVICE POWER BREAKERS AS REQUIRED TO CONNECT ANY NEW ECS INSTRUMENTATION SPECIFIED IN THE INSTRUMENTATION DRAWINGS AND SPECIFICATIONS.
10. THE REGULATED 110VAC POWER SHALL ONLY BE USED FOR THE DEVICES SPECIFIED IN THE INSTRUMENTATION DRAWINGS. ANY ADDITIONAL DEVICE CONNECTION TO THE REGULATED 110VAC SHALL BE APPROVED BY THE NASA CONTRACTING OFFICER.

SYM	ZONE	DESCRIPTION	DATE	APPROVED
REVISIONS				

JACOBS
Jacobs Technology Inc.

SIGNATURES		DATE
DRAWN	M. HENNIGH	3/07/14
CHECKED	J. WHITEFORD	3/07/14
SUBMITTED	S. RITTER	3/07/14
ST OF LICENSURE: TN LICENSE NO: 00110556		
APPROVED	G. WARD	3/07/14
	S. HUNT	3/07/14

NATIONAL AERONAUTICS AND SPACE ADMINISTRATION
JOHN F. KENNEDY SPACE CENTER, NASA
KENNEDY SPACE CENTER, FLORIDA

KSC LAUNCH PAD 39-B
ENVIRONMENTAL CONTROL SYSTEM (ECS) REFURBISHMENT

INSTRUMENTATION
REMOTE I/O 37568 REGULATED AC POWER SCHEMATIC

FILE NO.	SIZE	DWG.NO.	REV
	F	79K39602	

PCN. NO. 98898 SHEET 179 OF 187

I-096

NOTES:

1. THIS SCHEMATIC IS TO BE USED IN CONJUNCTION WITH THE PLC AND REMOTE DISTRIBUTOR TAG INDEX TABLES. WIRING TERMINATIONS AND INTERFACE CONNECTOR ASSIGNMENTS ARE DEFINED IN THE REMOTE DISTRIBUTION CABINET TAG INDEX TABLES.
2. THE CONTRACTOR SHALL USE THE EXISTING FIELD INTERFACE TERMINAL BLOCKS FOR CONNECTION OF THE PLC I/O TO THE ENCLOSURE INTERFACE CONNECTORS. IF ADDITIONAL TERMINAL BLOCKS ARE REQUIRED THE CONTRACTOR SHALL PROVIDE AND INSTALL.
3. THIS PRESSURE SIGNAL SCHEMATIC SHALL BE USED FOR ALL REDUNDANT PAIRS OF PRESSURE PROBES.
4. FOR SINGLE FAULT TOLERANCE REQUIRED BY NASA ONE PRESSURE PROBE SHALL BE CONNECTED TO SYSTEM A AND THE OTHER TO SYSTEM B.
5. THE CONTRACTOR SHALL BE RESPONSIBLE FOR PROGRAMMING THE PRESSURE MEASUREMENT CHANGE ON A FAILURE OF A PROCESS SENSOR TO THE REDUNDANT PROCESS SENSOR.
6. REFERENCE THE RIO DC DEVICE POWER SCHEDULE FOR DEVICE POWER SUPPLY CIRCUIT AND/OR POWER CONNECTION DETAILS.

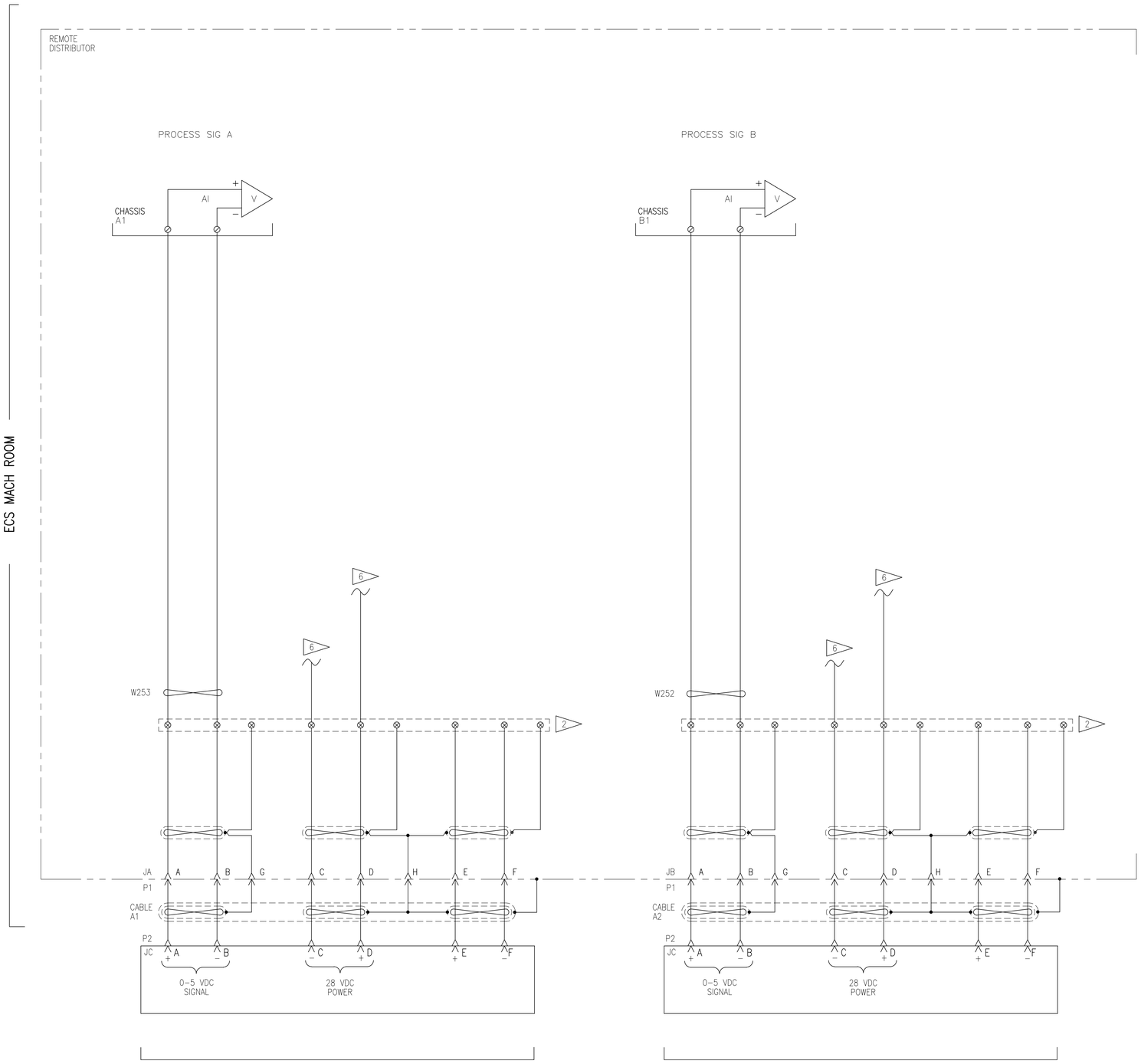

SYM	ZONE	DESCRIPTION	DATE	APPROVED
		REVISIONS		

JACOBS
Jacobs Technology Inc.

SIGNATURES		DATE
DRAWN	M. HENNIGH	3/07/14
CHECKED	J. WHITEFORD	3/07/14
SUBMITTED	S. RITTER	3/07/14
ST OF LICENSURE: TN LICENSE NO: 00110556		
APPROVED	G. WARD	3/07/14
	S. HUNT	3/07/14

NATIONAL AERONAUTICS AND SPACE ADMINISTRATION
JOHN F. KENNEDY SPACE CENTER, NASA
KENNEDY SPACE CENTER, FLORIDA

KSC LAUNCH PAD 39-B
ENVIRONMENTAL CONTROL SYSTEM (ECS) REFURBISHMENT
INSTRUMENTATION
REDUNDANT PROCESS TRANSDUCER WIRING DETAILS

FILE NO.	SIZE	DWG.NO.	REV
	F	79K39602	
PCN. NO. 98898		SHEET 180 OF 187	

I-097

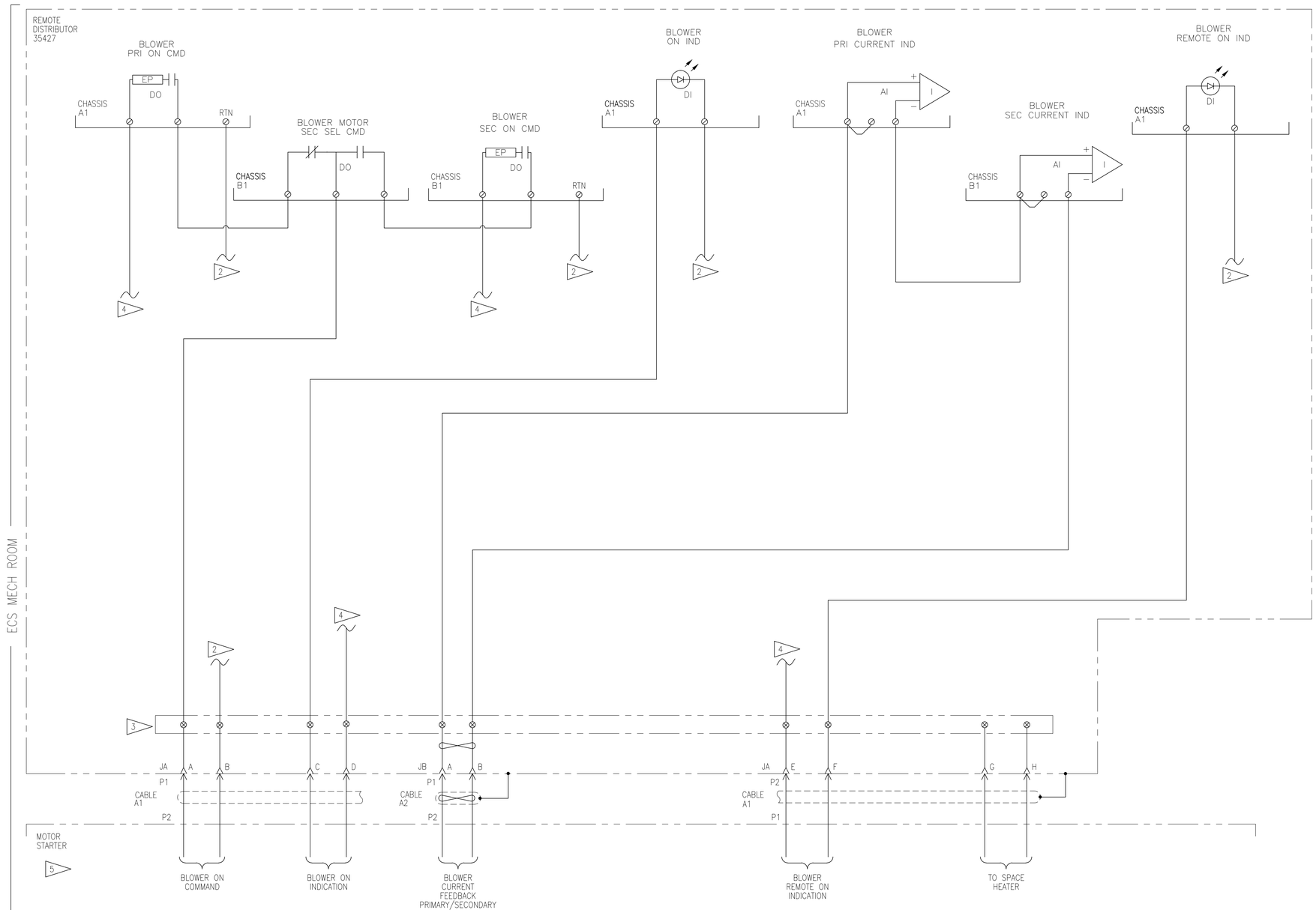

NOTES:

1. THIS SCHEMATIC IS TO BE USED IN CONJUNCTION WITH THE PLC AND REMOTE DISTRIBUTOR TAG INDEX TABLES. WIRING TERMINATIONS AND INTERFACE CONNECTOR ASSIGNMENTS ARE DEFINED IN THE REMOTE DISTRIBUTION CABINET TAG INDEX TABLES.
2. TO POWER RETURN/NEUTRAL LOCATED IN REMOTE DISTRIBUTOR ENCLOSURE.
3. CONTRACTOR SHALL USE EXISTING FIELD INTERFACE TERMINAL BLOCKS TO CONNECT PLC CHANNEL I/O TO THE REMOTE DISTRIBUTION ENCLOSURES INTERFACE CONNECTORS. IF ADDITIONAL TERMINAL BLOCKS ARE REQUIRED THE CONTRACTOR SHALL PROVIDE AND INSTALL.
4. TO SIGNAL/CONTROL POWER SOURCE BUS LOCATED IN REMOTE DISTRIBUTOR ENCLOSURE.
5. REFERENCE ELECTRICAL SHEET E-017 FOR NORTH, SOUTH AND STANDBY MOTOR STARTER CONNECTION DETAILS.
6. THIS SCHEMATIC SHALL BE USED FOR THE NORTH, SOUTH AND STANDBY BLOWER CONTROLS.
7. FOR THE SINGLE FAULT TOLERANCE REQUIRED BY NASA, THE BLOWER MOTOR CONTROLS SHALL BE WIRED SO THAT EITHER PLC SYSTEM A OR PLC SYSTEM B CAN:
   - START/STOP THE BLOWER MOTOR
   - RECEIVE THE BLOWER MOTOR CURRENT FEEDBACK
   - SWITCH FROM PRIMARY TO SECONDARY CONTROL ON A SYSTEM A FAULT
8. THIS WIRING SCHEMATIC SHOWS THE BLOWER CONTROLS IN WHICH SYSTEM A IS THE PRIMARY SYSTEM AND B IS THE SECONDARY. FOR WIRING SYSTEM B AS THE PRIMARY ALL OCCURRENCES OF A1 AND B1 MUST BE SWAPPED.
9. THE CONTRACTOR SHALL BE RESPONSIBLE FOR PROGRAMMING THE CONTROL CHANGE ON A FAILURE OF A BLOWER SUCH THAT WHEN ONE BLOWER FAILS, THE REDUNDANT NON-FAULTED BLOWER WILL TURN ON AND TAKE THE LOAD OF THE FAILED BLOWER.

SYM	ZONE	DESCRIPTION	DATE	APPROVED
REVISIONS				

JACOBS
Jacobs Technology Inc.

SIGNATURES		DATE
DRAWN	M. HENNIGH	3/07/14
CHECKED	J. WHITEFORD	3/07/14
SUBMITTED	S. RITTER	3/07/14
ST OF LICENSURE: TN LICENSE NO: 00110556		
APPROVED	G. WARD	3/07/14
	S. HUNT	3/07/14

NATIONAL AERONAUTICS AND SPACE ADMINISTRATION
JOHN F. KENNEDY SPACE CENTER, NASA
KENNEDY SPACE CENTER, FLORIDA

KSC LAUNCH PAD 39-B
ENVIRONMENTAL CONTROL SYSTEM (ECS) REFURBISHMENT

INSTRUMENTATION
BLOWER MOTOR
CONTROLS SCHEMATIC

FILE NO.	SIZE	DWG.NO.	REV
I-098	F	79K39602	

PCN. NO. 98898 SHEET 181 OF 187

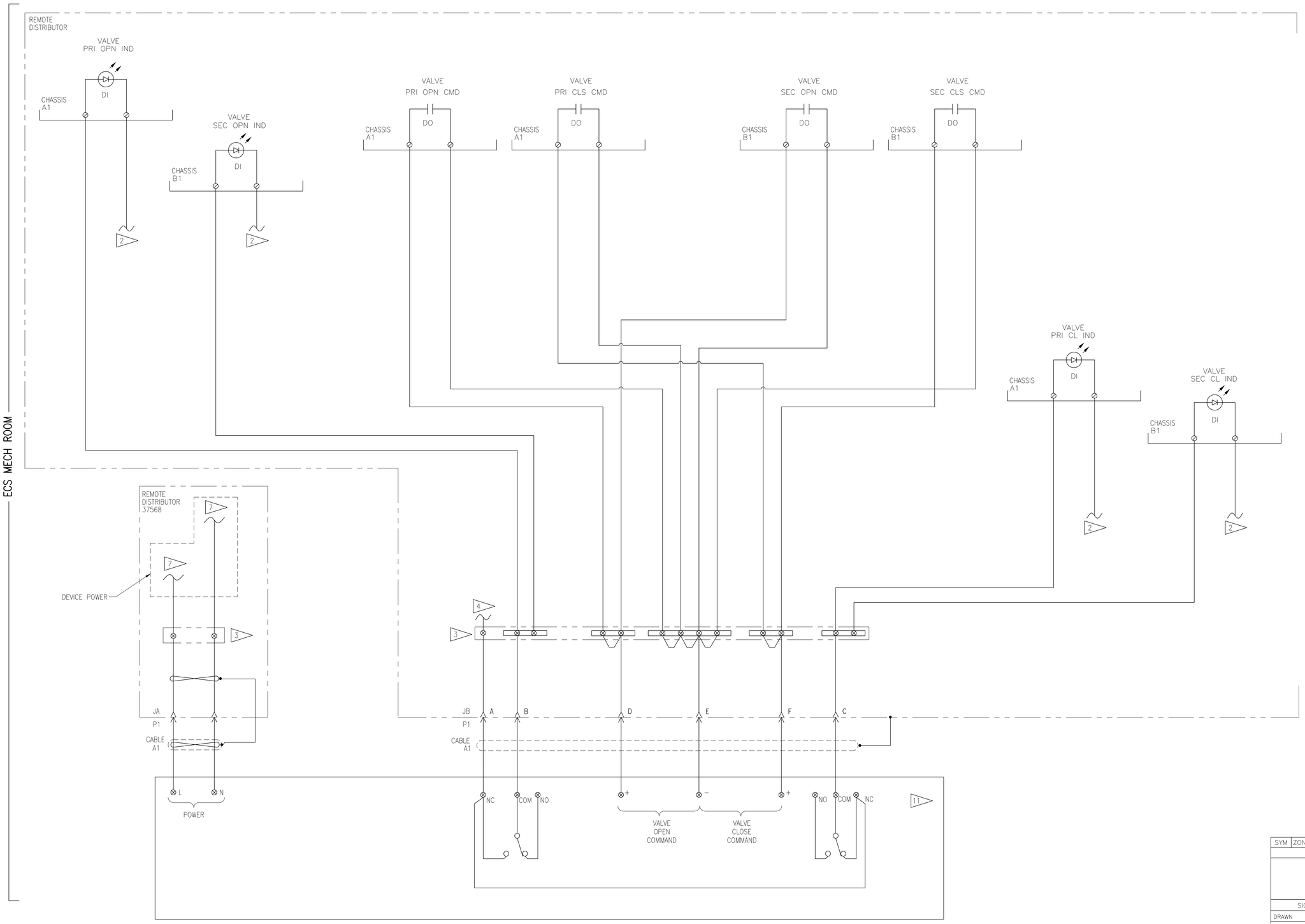

NOTES:

1. THIS SCHEMATIC IS TO BE USED IN CONJUNCTION WITH THE PLC AND REMOTE DISTRIBUTOR TAG INDEX TABLES. WIRING TERMINATIONS AND INTERFACE CONNECTOR ASSIGNMENTS ARE DEFINED IN THE REMOTE DISTRIBUTION CABINET TAG INDEX TABLES.

2. TO POWER RETURN/NEUTRAL LOCATED IN REMOTE DISTRIBUTOR ENCLOSURE.

3. CONTRACTOR SHALL USE EXISTING FIELD INTERFACE TERMINAL BLOCKS TO CONNECT PLC CHANNEL I/O TO THE REMOTE DISTRIBUTION ENCLOSURES INTERFACE CONNECTORS. IF ADDITIONAL TERMINAL BLOCKS ARE REQUIRED THE CONTRACTOR SHALL PROVIDE AND INSTALL.

4. TO SIGNAL/CONTROL POWER SOURCE BUS LOCATED IN REMOTE DISTRIBUTOR ENCLOSURE.

5. THIS SCHEMATIC SHALL BE USED FOR THE FOLLOWING DEVICES:
   - MOV-017
   - MOV-018
   - MOV-019
   - MOV-020
   - MOV-021
   - MOV-022
   - MOV-023

6. FOR THE SINGLE FAULT TOLERANCE REQUIRED BY NASA, THE SINGLE 24VDC CONFIGURATION VALVE SHALL BE WIRED SO THAT:
   - EITHER SYSTEM A OR SYSTEM B CAN HAVE FULL CONTROL OVER THE VALVE
   - BOTH SYSTEM A AND SYSTEM B RECEIVE THE VALVE FULL OPEN AND FULL CLOSE FEEDBACKS

7. REFERENCE SHEET I-060 FOR DEVICE POWER SUPPLY CIRCUIT AND/OR POWER CONNECTION DETAILS.

8. FOR THIS TYPE OF CONTROL VALVE THE CONTRACTOR SHALL BE RESPONSIBLE FOR PROGRAMMING THE CONTROL SUCH THAT THE OPEN AND CLOSE SIGNALS FROM EITHER SYSTEM A OR B ARE NEVER ON AT THE SAME TIME.

9. FOR THIS TYPE OF CONTROL VALVE THE CONTRACTOR SHALL BE RESPONSIBLE FOR PROGRAMMING THE OPEN AND CLOSE COMMANDS SO THAT ONCE A FULL OPEN OR FULL CLOSE LIMIT SWITCH IS REACHED THE RESPECTIVE OPEN OR CLOSE COMMAND FROM THE PLC IS SHUT OFF. (POWER TO THE VALVE MOTOR SHALL BE SHUT OFF ONCE A VALVE LIMIT HAS BEEN REACHED)

10. THE VALVE SCHEMATIC SHOWN DETAILS SYSTEM A AS PRIMARY. FOR VALVES WHERE SYSTEM B IS THE PRIMARY SWAP ALL OCCURRENCES OF A1 WITH B1 AND B1 WITH A1.

11. ACTUAL VALVE WIRING SHALL DEPEND ON TYPE OF MOTORIZED ACTUATOR SELECTED.

SYM	ZONE	DESCRIPTION	DATE	APPROVED
		REVISIONS		

JACOBS
Jacobs Technology Inc.

SIGNATURES		DATE
DRAWN	M. HENNIGH	3/07/14
CHECKED	J. WHITEFORD	3/07/14
SUBMITTED	S. RITTER	3/07/14
ST OF LICENSURE: TN LICENSE NO: 00110556		
APPROVED	G. WARD	3/07/14
	S. HUNT	3/07/14

NATIONAL AERONAUTICS AND SPACE ADMINISTRATION
JOHN F. KENNEDY SPACE CENTER, NASA
KENNEDY SPACE CENTER, FLORIDA

KSC LAUNCH PAD 39-B
ENVIRONMENTAL CONTROL SYSTEM (ECS) REFURBISHMENT
INSTRUMENTATION
GENERAL 24VDC
CONTROLLED SINGLE VALVE SCHEMATIC

FILE NO.	SIZE	DWG.NO.	REV
	F	79K39602	

PCN. NO. 98898 | SHEET 182 OF 187

I-099

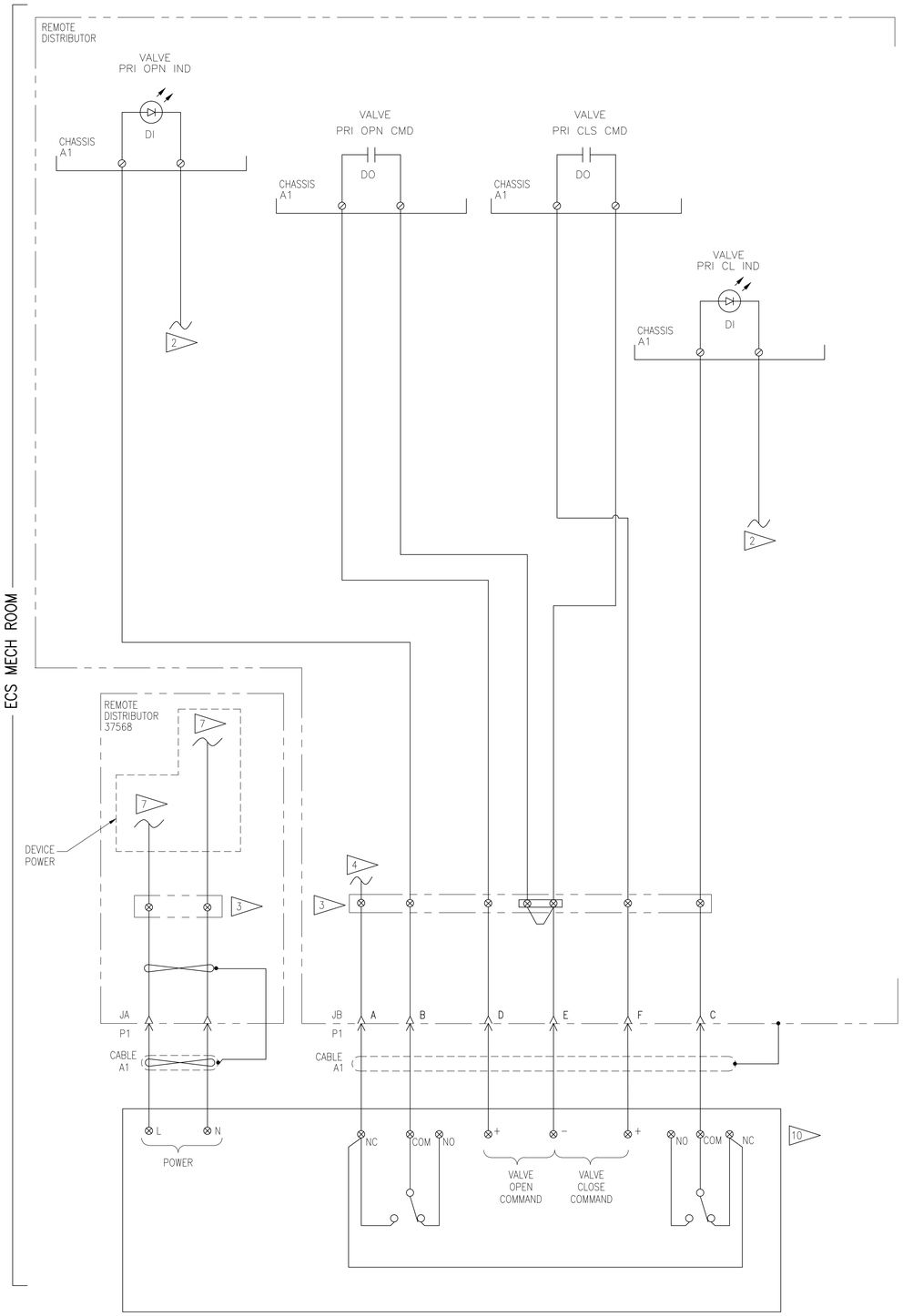

24VDC
CONTROL VALVE

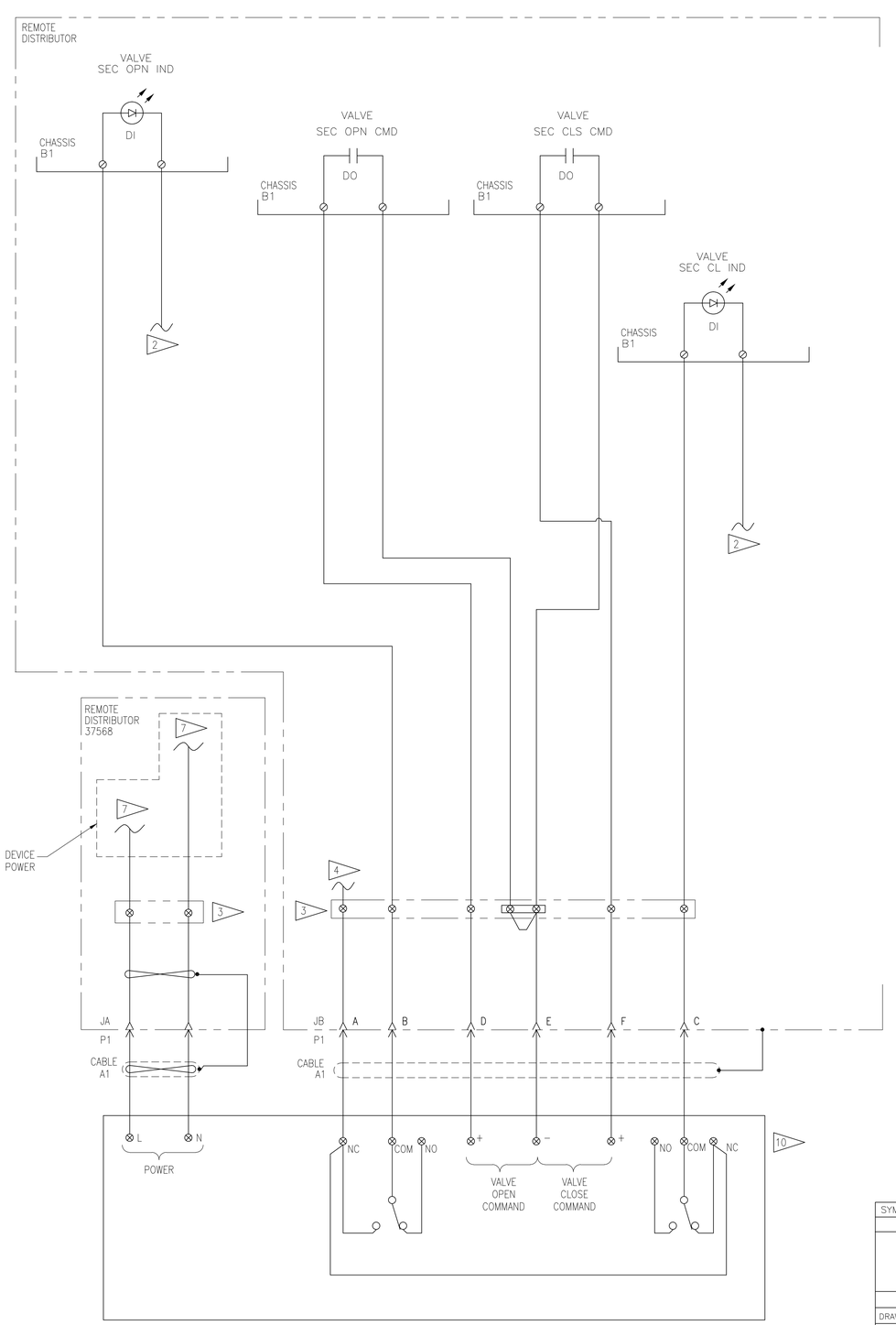

24VDC
CONTROL VALVE

NOTES:

1. THIS SCHEMATIC IS TO BE USED IN CONJUNCTION WITH THE PLC AND REMOTE DISTRIBUTOR TAG INDEX TABLES. WIRING TERMINATIONS AND INTERFACE CONNECTOR ASSIGNMENTS ARE DEFINED IN THE REMOTE DISTRIBUTION CABINET TAG INDEX TABLES.

2. TO POWER RETURN/NEUTRAL LOCATED IN REMOTE DISTRIBUTOR ENCLOSURE.

3. CONTRACTOR SHALL USE EXISTING FIELD INTERFACE TERMINAL BLOCKS TO CONNECT PLC CHANNEL I/O TO THE REMOTE DISTRIBUTION ENCLOSURES INTERFACE CONNECTORS. IF ADDITIONAL TERMINAL BLOCKS ARE REQUIRED THE CONTRACTOR SHALL PROVIDE AND INSTALL.

4. TO SIGNAL/CONTROL POWER SOURCE BUS LOCATED IN REMOTE DISTRIBUTOR ENCLOSURE.

5. THIS SCHEMATIC SHALL BE USED FOR THE FOLLOWING DEVICES:
   - MOV-300A
   - MOV-240A
   - MOV-300B
   - MOV-240B

6. FOR THE SINGLE FAULT TOLERANCE REQUIRED BY NASA, THE SINGLE 24VDC CONFIGURATION VALVE SHALL BE WIRED SO THAT:

7. REFERENCE SHEET I-060 FOR DEVICE POWER SUPPLY CIRCUIT AND/OR POWER CONNECTION DETAILS.

8. FOR THESE TYPES OF CONTROL VALVES THE CONTRACTOR SHALL BE RESPONSIBLE FOR PROGRAMMING THE CONTROL SUCH THAT THE OPEN AND CLOSE SIGNALS ARE NEVER ON AT THE SAME TIME.

9. FOR THIS TYPE OF CONTROL VALVE THE CONTRACTOR SHALL BE RESPONSIBLE FOR PROGRAMMING THE OPEN AND CLOSE COMMANDS SO THAT ONCE A FULL OPEN OR FULL CLOSE LIMIT SWITCH IS REACHED THE RESPECTIVE OPEN OR CLOSE COMMAND FROM THE PLC IS SHUT OFF. (POWER TO THE VALVE MOTOR SHALL BE SHUT OFF ONCE A VALVE LIMIT HAS BEEN REACHED)

10. ACTUAL VALVE WIRING SHALL DEPEND ON TYPE OF MOTORIZED ACTUATOR SELECTED.

11. FOR THESE VALVES THE CONTRACTOR SHALL BE RESPONSIBLE FOR PROGRAMMING THE CONTROL CHANGE ON A VALVE FAILURE SO THAT THE CONTROL CHANGE RESULTS IN A BUMPLESS TRANSFER OF CONTROL TO THE REDUNDANT VALVE.

SYM	ZONE	DESCRIPTION	DATE	APPROVED
		REVISIONS		

JACOBS
Jacobs Technology Inc.

SIGNATURES		DATE
DRAWN	M. HENNIGH	3/07/14
CHECKED	J. WHITEFORD	3/07/14
SUBMITTED	S. RITTER	3/07/14
ST OF LICENSURE: TN LICENSE NO: 00110556		
APPROVED	G. WARD	3/07/14
	S. HUNT	3/07/14

NATIONAL AERONAUTICS AND SPACE ADMINISTRATION
JOHN F. KENNEDY SPACE CENTER, NASA
KENNEDY SPACE CENTER, FLORIDA

KSC LAUNCH PAD 39-B
ENVIRONMENTAL CONTROL SYSTEM (ECS) REFURBISHMENT
INSTRUMENTATION
GENERAL 24VDC CONTROLLED
DUAL VALVE SCHEMATIC

FILE NO.	SIZE	DWG.NO.	REV
	F	79K39602	

PCN. NO. 98898 SHEET 183 OF 187

I-100

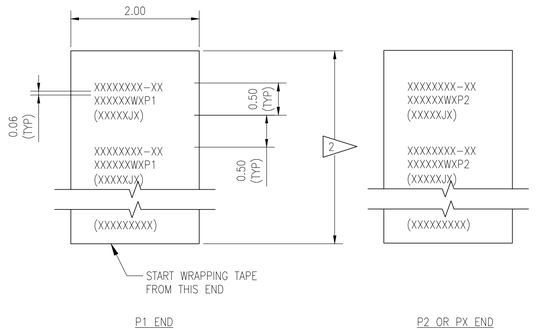

LABEL MARKING DETAIL

NOTES:

1. DASH NUMBER AFTER SUBASSEMBLY DRAWING NUMBER DENOTES THE ESTIMATED CABLE LENGTH IN METERS TO THE NEAREST ONE-TENTH METER. USE LETTER D IN LIEU OF THE DECIMAL, LENGTH TO BE DETERMINED AT FABRICATION AND RED LINE DRAWINGS AS REQUIRED.
EXAMPLE: 79KXXXXX-18D3 DENOTES 18.3 METER CABLE.

2. PRINT REQUIRED CABLE HARNESS INDENTIFICATION ONTO GREEN 75M11300-1 LABEL TAPE IN ACCORDANCE WITH PARAGRAPH 3.1 OF KSC-STD-E-0015, USING 0.125 INCH BLACK UPPER CASE BLOCK CHARACTERS AND THE TAPE MANUFACTURER'S RECOMMENDED LABELING SYSTEM, FOR CABLES WITH A DIAMETER LESS THAN .25 INCH, APPLY GLASS FIBER TAPE MIL-1 -19166, AS REQUIRED, TO INCREASE CABLE DIAMETER TO .25INCH(MINIMUM) AT LABEL TAPE MOUNTING LOCATIONS AND COVER WITH HEAT SHRINK TUBING PER MIL-1-23053/1 PRIOR TO LABEL TAPE INSTALLATION. LABEL TAPE WITH REQUIRED IDENTIFICATION REPEATED OVER THE ENTIRE LENGTH OF THE TAPE. PRINTING SHALL BE IN ACCORDANCE LABEL MARKING DETAIL SHOWN ON THIS DRAWING AND LABELS SHALL BE INSTALLED WHERE SHOWN. REQUIRED CABLE /HARNESS ASSEMBLY IDENTIFICATIONS SHALL CORRESPOND TO THE FOLLOWING

LINE 1: CABLE (OR HARNESS) ASSEMBLY DRAWING + DASH NUMBER	XXXEXXXXXXX-XX
LINE 2: CABLE REFERENCE DESIGNATOR NUMBER + CONNECTOR "P" NUMBER	XXXXXXPX
LINE 3: CABLE TERMINATION REFERENCE DESIGNATOR NUMBER	XXXXXXX

3. TBD

4. THE CONTRACTOR SHALL ADHERE TO THE ELECTRICAL CABLE FABRICATION REQUIREMENTS WITHIN DOCUMENT 120E3100003.

5. THE CONTRACTOR SHALL POT AND MOULD ALL CONTROL CABLE CONNECTORS PER STANDARD KSC-STD-132 AND THE ELECTRICAL CABLE FABRICATION REQUIREMENTS OUTLINED IN 120E3100003 SECTIONS 2 AND 3.

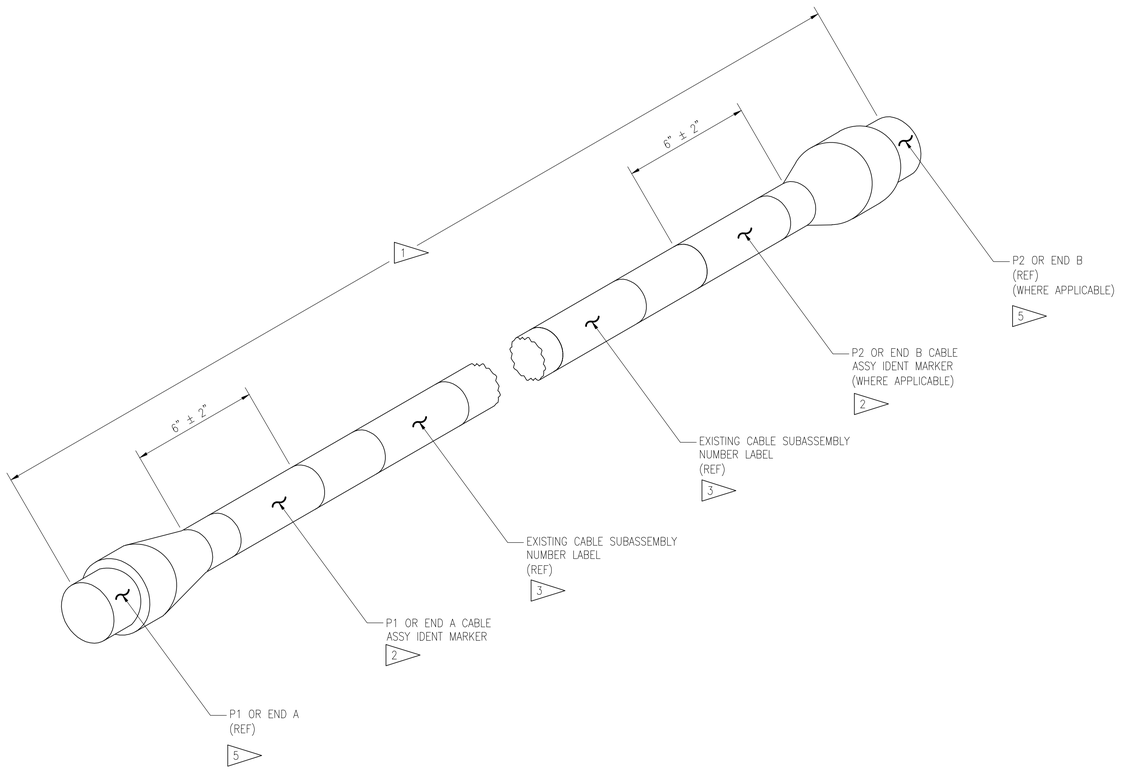

TYPICAL CABLE MARKING DETAIL

SYM	ZONE	DESCRIPTION	DATE	APPROVED
		REVISIONS		

JACOBS
Jacobs Technology Inc.

NATIONAL AERONAUTICS AND SPACE ADMINISTRATION
JOHN F. KENNEDY SPACE CENTER, NASA
KENNEDY SPACE CENTER, FLORIDA

KSC LAUNCH PAD 39-B
ENVIRONMENTAL CONTROL SYSTEM (ECS) REFURBISHMENT

INSTRUMENTATION GENERAL WIRING AND TERMINATION DETAILS SHEET 2

SIGNATURES		DATE
DRAWN	M. HENNIGH	3/07/14
CHECKED	J. WHITEFORD	3/07/14
SUBMITTED	S. RITTER	3/07/14
ST OF LICENSURE: TN LICENSE NO: 00110556		
APPROVED	G. WARD	3/07/14
	S. HUNT	3/07/14

FILE NO.	SIZE	DWG.NO.	REV
I-101	F	79K39602	
PCN. NO. 98898		SHEET 184 OF 187	

COOLING TOWER SEQUENCE OF OPERATIONS

CTF-401, CTF-402, CTF-403, P-411 AND P-412

THE COOLING TOWER IS USED TO PROVIDE COOLING WATER TO THE ECS CHILLERS, AND THE COOLING CHAMBER PRE-COOL COILS. THE COOLING TOWER CONSISTS OF TWO REDUNDANT CONDENSER WATER PUMPS, THREE COOLING TOWER FANS, AND ASSOCIATED PRESSURE, TEMPERATURE, AND FLOW INSTRUMENTATION USED FOR CONTROL. THE COOLING TOWER SYSTEM IS CONTROLLED FROM THE REDUNDANT ECS CONTROL PLC SYSTEM LOCATED IN THE ECS CONTROL ROOM. THE FOLLOWING CONTROL DESCRIPTIONS DESCRIBE THE OPERATIONAL CHARACTERISTICS OF THE COOLING TOWER.

FAN VFD START/STOP OPERATION:	DURING NORMAL OPERATION EACH FAN VFD SHALL BE SET IN REMOTE. LOCAL/OFF/REMOTE SWITCHES ARE LOCATED IN THE COOLING TOWER DISTRIBUTION ENCLOSURE 35441. THESE SWITCHES ALLOW EACH FAN TO BE PLACED IN THE REMOTE, LOCAL, OR OFF STATE. FOR AUTOMATIC CONTROL OF THE COOLING TOWER, THE SWITCHES FOR EACH ONE OF THE COOLING TOWER FANS SHALL BE PLACED IN REMOTE. WITH ALL OF THE COOLING TOWER FANS IN REMOTE, THE ON/OFF STATE AND THE SPEED OF THE COOLING TOWER FANS SHALL BE CONTROLLED, BY THE ECS CONTROL SYSTEM, USING DIGITAL AND 4-20MA SIGNALS TO EACH OF THE COOLING TOWER FAN VFDS TO CONTROL CONDENSER WATER SUPPLY TEMPERATURE.
FAN VFD INTERLOCKS:	THE COOLING TOWER FANS SHALL BE INTERLOCKED, WITHIN THE ECS PLCS SO THAT NONE OF THE COOLING TOWER FANS WILL RUN UNLESS ONE OF THE COOLING TOWER PUMPS IS RUNNING AND THERE IS COOLING WATER FLOW AS INDICATED BY DPT-417A AND DPT-417B, OR IF THE COOLING TOWER BYPASS VALVE FCV-415 IS PLACED IN BYPASS MODE.
FAN FAULT:	EACH COOLING TOWER FAN SHALL HAVE VIBRATION SWITCHES AND OVERLOAD PROTECTION WHICH SHALL SHUT DOWN THE RESPECTIVE COOLING TOWER FAN ON HIGH VIBRATION, HIGH FAN MOTOR CURRENT OR FAN MOTOR TEMPERATURE. THE ECS CONTROL SYSTEM SHALL MONITOR THE ON/OFF STATES OF THE COOLING TOWER FANS TO DETERMINE IF A FAULT OCCURS. IF A FAN IS COMMANDED ON AND THE ON/OFF STATUS FEEDBACK TO THE ECS CONTROL SYSTEM DOES NOT MATCH THE COMMAND STATE AFTER 10 SEC. (CONFIGURABLE IN CODE) THE ECS CONTROL SYSTEM SHALL AUTOMATICALLY REGISTER A FAULT. THIS FAULT SHALL BE DISPLAYED ON THE ECS CONTROL SCADA AND THE FAN ON/OFF COMMAND SIGNAL FROM THE ECS CONTROL SYSTEM SHALL BE TURNED OFF.
COOLING TOWER FAN CONTROL:	DURING NORMAL OPERATION THE ECS CONTROL SYSTEM SHALL CONTROL THE COOLING TOWER CONDENSER WATER SUPPLY TEMPERATURE TO 60 DEGF (CONFIGURABLE IN CODE). EACH OF THE COOLING TOWER FANS SHALL BE CONTROLLED USING THE CONDENSER WATER SUPPLY TEMPERATURE AS FEEDBACK. WHEN THE COOLING TOWER SYSTEM IS ENABLED THE ECS CONTROL SYSTEM SHALL STAGGER START OR START EACH OF THE COOLING TOWER FANS . WHEN A FAN IS COMMANDED ON, THE FAN SHALL START AT ITS MINIMUM SPEED. EACH FAN SHALL THEN BE MODULATED BASED ON THE CONDENSER WATER SUPPLY TEMPERATURE. WHEN THE TEMPERATURE RISES ABOVE THE CONTROL TEMPERATURE SETPOINT PLUS A DEADBAND OF +/-2.5 DEGF (CONFIGURABLE IN CODE), THE ECS CONTROL PLC WILL SPEED UP ONE OF THE COOLING TOWER FANS. IF THE COOLING TOWER FAN HAS REACHED ITS UPPER SPEED LIMIT THEN THE ECS CONTROL SYSTEM SHALL START ANOTHER COOLING TOWER FAN AT ITS MINIMUM SPEED AND THEN BEGIN MODULATING THIS FAN UNTIL THE CONDENSER WATER SUPPLY TEMPERATURE IS WITHIN A DEAD BAND OF+/-2.5 DEGF (CONFIGURABLE IN CODE). THE CONTROL SYSTEM SHALL THEN MAINTAIN THE COOLING TOWER FANS SPEED UNTIL THE FEEDBACK TEMPERATURE MOVES OUTSIDE THE DEADBAND OF THE SETPOINT. WHEN THE TEMPERATURE FALLS BELOW THE CONTROL TEMPERATURE SETTING MINUS A DEADBAND OF +/-2.5 DEGF (CONFIGURABLE IN CODE), THE ECS CONTROL PLC WILL SLOW DOWN ONE OF THE COOLING TOWER FANS. IF THE COOLING TOWER FAN HAS REACHED ITS MINIMUM SPEED LIMIT, AND THE CONDENSER WATER TEMPERATURE IS STILL BELOW THE SETPOINT MINUS THE DEADBAND, THEN THE ECS CONTROL SYSTEM SHALL STOP THE COOLING TOWER FAN. THE ECS CONTROL SYSTEM SHALL THEN BEGIN TO MODULATE THE NEXT COOLING TOWER FAN, WHICH IS AT MAXIMUM SPEED UNTIL THE CONDENSER WATER SUPPLY TEMPERATURE RISES TO WITHIN A DEAD BAND OF+/-2.5 DEGF (CONFIGURABLE IN CODE). THE CONTROL SYSTEM SHALL THEN MAINTAIN THE COOLING TOWER FANS SPEED UNTIL THE FEEDBACK TEMPERATURE MOVES OUTSIDE THE DEADBAND OF THE SETPOINT.
PUMP SOFTSTARTER START/STOP OPERATION:	DURING NORMAL OPERATION THE PUMP SOFT-STARTER WILL BE SET IN REMOTE AND BE CONTROLLED BY THE ECS CONTROL SYSTEM PLCS. LOCAL/OFF/REMOTE SWITCHES FOR THE PUMPS ARE LOCATED IN THE COOLING TOWER DISTRIBUTION ENCLOSURE 35441. THESE SWITCHES ALLOW EACH OF THE TWO PUMPS TO BE PLACED IN THE REMOTE,LOCAL, OR OFF STATE. FOR AUTOMATIC CONTROL OF THE COOLING TOWER, THE SWITCHES FOR EACH ONE OF THE COOLING TOWER PUMPS SHALL BE PLACED IN REMOTE. WITH ALL OF THE COOLING TOWER PUMPS IN REMOTE, THE ON/OFF STATE OF THE COOLING TOWER PUMPS SHALL BE CONTROLLED BY THE ECS CONTROL SYSTEM, USING DIGITAL SIGNALS TO EACH OF THE COOLING TOWER PUMP SOFT-STARTERS.
PUMP INTERLOCKS:	THE COOLING TOWER PUMPS SHALL BE INTERLOCKED, WITHIN THE ECS PLCS, SO THAT NONE OF THE COOLING TOWER PUMPS WILL RUN ON A HIGH SUPPLY PRESSURE, OR IF THERE IS NO COOLING WATER FLOW FOR 10 SEC. (CONFIGURABLE IN CODE). THE HIGH SUPPLY PRESSURE IS DETERMINED BY A DIGITAL SIGNAL FROM A PRESSURE SWITCH DIRECTLY DOWNSTEAM OF EACH OF THE COOLING TOWER PUMPS. THIS SWITCH WILL HAVE TO BE ACTUATED WITHIN 5 SEC. OF A START COMMAND BEFORE THE ECS CONTROL SYSTEM AUTOMATICALLY SHUTS DOWN THE PUMP.
PUMP FAULT:	EACH COOLING TOWER PUMP SHALL HAVE OVERLOAD PROTECTION WHICH SHALL SHUT DOWN THE RESPECTIVE COOLING TOWER PUMP ON HIGH MOTOR CURRENT OR TEMPERATURE. THE ECS CONTROL SYSTEM SHALL MONITOR THE ON/OFF STATES OF THE COOLING TOWER PUMPS TO DETERMINE IF A FAULT OCCURS. IF A PUMP IS COMMANDED ON AND THE ON/OFF STATUS FEEDBACK TO THE ECS CONTROL SYSTEM DOES NOT MATCH THE COMMAND STATE AFTER 10 SEC. (CONFIGURABLE IN CODE), THE ECS CONTROL SYSTEM SHALL AUTOMATICALLY REGISTER A FAULT. THIS FAULT SHALL BE DISPLAYED ON THE ECS CONTROL SCADA AND THE PUMP COMMAND SIGNAL FROM THE ECS CONTROL SYSTEM SHALL BE TURNED OFF.
PUMP OPERATION:	DURING NORMAL OPERATION THE COOLING TOWER PUMPS SHALL BE TURNED ON AND OFF FROM THE ECS CONTROL SYSTEM PLCS. THE PUMPS SHALL BE OPERATED SO THAT THEY ARE REDUNDANT TO EACH OTHER AND THAT ON A FAILURE OF ONE PUMP THE OTHER PUMP WILL TURN ON TO MAINTAIN NORMAL OPERATION OF THE COOLING TOWER. DURING INITIAL STARTUP OF THE COOLING TOWER, THE COOLING PUMPS SHALL BE STAGGER STARTED SO THAT THE COOLING TOWER PUMP WHICH IS TURNED ON IS NOT THE LAST PUMP THAT WAS RUNNING.
ECS PLC FAILURE:	IF ONE OF THE PLCS FAILS DURING OPERATION OF THE COOLING TOWER, THE NON-FAULTED PLC SHALL ASSUME CONTROL OF THE COOLING TOWER EQUIPMENT. THE ECS CONTROL PLC SHALL TURN ON AND OFF EQUIPMENT TO MAINTAIN CONTROL OF THE COOLING TOWER SYSTEMS AT THE SAME OPERATIONAL STATE THAT IT WAS AT BEFORE THE PLC FAILURE. THE SYSTEM SHALL NOTIFY THE OPERATOR OF ALL ALARMS, WARNINGS, AND FAULTS BY DISPLAYING THEM ON THE ECS CONTROL ROOM SCADA SYSTEM.
ECS CONTROL AND FEEDBACK:	THE COOLING TOWER SYSTEM SHALL BE TURNED ON AND OFF BY AN OPERATOR FROM THE ECS CONTROL ROOM USING THE ECS SCADA SYSTEM. THE ECS CONTROL PLC SHALL MONITOR ALL OF THE COOLING TOWER EQUIPMENT STATUSES AND PROCESS FEEDBACKS AND DISPLAY THEM ON THE ECS SCADA SYSTEM. A DEDICATED SCREEN ON THE ECS SCADA SYSTEM SHALL BE USED TO DISPLAY THE OVERALL LAYOUT OF THE COOLING TOWER SYSTEM AS WELL AS ALL OF THE PROCESS FEEDBACKS IN THEIR PROPER LOCATIONS WITHIN THE ECS MECHANICAL ROOM AND OUTSIDE COOLING TOWER AREA.
COOLING WATER FREEZE PROTECTION BYPASS:	THE CONDENSER WATER LOOP BY-PASS FEATURE SHALL BE CONTROLLED USING FCV-415 TO DIVERT THE RETURN WATER DIRECTLY TO THE SUMP. DURING COLD DAYS THIS VALVE SHALL BE PLACED IN FULL BY-PASS MODE IF THE CONDENSER WATER SUPPLY TEMP FALLS BELOW 38 DEG F (CONFIGURABLE IN CODE).

CHILLER AND CHILLED WATER/GLYCOL SEQUENCE OF OPERATIONS

CH-501, CH-502, CH-503, P-511, AND P-512

THE ECS CHILLER SYSTEMS ARE USED TO PROVIDE CHILLED WATER/GLYCOL TO THE COOLING CHAMBER POST-COOL COILS WHICH ARE USED TO CONTROL THE AIR TEMPERATURE TO THE 12 ECS PURGE AIR DUCTS. THE ECS CHILLER SYSTEM CONSISTS OF THREE CHILLER SKIDS WITH LOCAL SYSTEM CONTROLS, TWO REDUNDANT WATER/GLYCOL PUMPS, WATER/GLYCOL MIXING/EXPANSION TANK, AND ASSOCIATED PRESSURE, TEMPERATURE, AND FLOW INSTRUMENTATION USED FOR CONTROL. THE CHILLER AND WATER/GLYCOL SYSTEM IS CONTROLLED FROM THE REDUNDANT ECS CONTROL PLC SYSTEMS LOCATED IN THE ECS CONTROL ROOM. THE FOLLOWING CONTROL DESCRIPTIONS DESCRIBE THE OPERATIONAL CHARACTERISTICS OF THE CHILLER AND CHILLED WATER/GLYCOL SYSTEM.

WATER GLYCOL PUMP STARTER OPERATION:	DURING NORMAL OPERATION THE WATER/GLYCOL PUMP STARTER WILL BE SET IN REMOTE AND BE CONTROLLED BY THE ECS CONTROL SYSTEM PLCS. LOCAL OFF/REMOTE SWITCHES FOR THE PUMPS ARE LOCATED IN THE LOCAL PUMP CONTROLLER 35762 AND SHALL BE USED TO PLACE THE PUMPS IN LOCAL, OFF, OR REMOTE MODES. FOR AUTOMATIC CONTROL OF THE CHILLER COOLING SYSTEM, THE SWITCHES FOR EACH ONE OF THE WATER/GLYCOL PUMPS SHALL BE PLACED IN REMOTE. WITH ALL OF THE WATER/GLYCOL PUMPS IN REMOTE, THE ON/OFF STATE OF THE WATER/GLYCOL PUMPS SHALL BE CONTROLLED,BY THE ECS CONTROL SYSTEM, USING DIGITAL SIGNALS TO EACH OF THE WATER/GLYCOL PUMP STARTERS. EACH DRIVE CAN BE LOCALLY TURNED ON AND OFF BY PLACING THEIR RESPECTIVE LOCAL SWITCHES TO LOCAL OR OFF. THE WATER/GLYCOL PUMPS SHALL BE STARTED BEFORE THE CHILLERS.
WATER/GLYCOL PUMP INTERLOCKS:	THE WATER/GLYCOL PUMPS SHALL BE INTERLOCKED, WITHIN THE ECS PLCS, SO THAT NONE OF THE WATER/GLYCOL PUMPS WILL RUN ON A HIGH SUPPLY PRESSURE, OR IF THERE IS NO WATER/GLYCOL FLOW FOR 10 SEC. (CONFIGURABLE IN CODE). THE HIGH SUPPLY PRESSURE IS DETERMINED BY A DIGITAL SIGNAL FROM A PRESSURE SWITCH DIRECTLY DOWNSTREAM OF EACH OF WATER/GLYCOL PUMP. THIS SWITCH WILL HAVE TO BE ACTUATED WITHIN 5 SEC. OF A START COMMAND BEFORE THE ECS CONTROL SYSTEM AUTOMATICALLY SHUTS DOWN THE PUMP.
WATER/GLYCOL PUMP FAULT:	EACH WATER/GLYCOL PUMP SHALL HAVE OVERLOAD PROTECTION WHICH SHALL SHUT DOWN THE RESPECTIVE WATER/GLYCOL PUMP ON HIGH MOTOR CURRENT OR TEMPERATURE. THE ECS CONTROL SYSTEM SHALL MONITOR THE ON/OFF STATES OF THE WATER/GLYCOL PUMPS TO DETERMINE IF A FAULT OCCURS. IF A PUMP IS COMMANDED ON AND THE ON/OFF STATUS FEEDBACK TO THE ECS CONTROL SYSTEM DOES NOT MATCH THE COMMAND STATE AFTER 10 SEC. (CONFIGURABLE IN CODE) THE ECS CONTROL SYSTEM SHALL AUTOMATICALLY REGISTER A FAULT. THIS FAULT SHALL BE DISPLAYED ON THE ECS CONTROL SCADA AND THE PUMP COMMAND SIGNAL FROM THE ECS CONTROL SYSTEM SHALL BE TURNED OFF.
WATER/GLYCOL PUMP START/STOP OPERATION:	IN NORMAL OPERATION THE WATER/GLYCOL PUMPS SHALL BE STARTED AND RUN CONTINUOUSLY UNTIL THEY ARE COMMANDED OFF. THE PUMPS SHALL BE OPERATED SO THAT THEY ARE REDUNDANT TO EACH OTHER AND THAT ON A FAILURE OF ONE PUMP THE OTHER PUMP WILL TURN ON TO MAINTAIN NORMAL OPERATION OF THE CHILLER AND WATER/GLYCOL SYSTEM. DURING INITIAL STARTUP OF THE CHILLER AND WATER/GLYCOL SYSTEM, THE WATER/GLYCOL PUMPS SHALL BE STAGGER STARTED SO THAT THE WATER/GLYCOL PUMP WHICH IS TURNED ON IS NOT THE LAST PUMP THAT WAS RUNNING. IN REMOTE MODE, THE ECS PLCS WILL START AND STOP THE PUMPS IN RESPONSE TO A START/STOP COMMAND FROM THE ECS CONTROL SCADA. IN BOTH THE LOCAL ON AND REMOTE THE WATER/GLYCOL PUMP OPERATION WILL BE SUBJECT TO ALL EQUIPMENT SAFETY CONTROLS.
CHILLER START/STOP OPERATION:	EACH OF THE THREE CHILLER SYSTEM HAS ITS OWN LOCAL CONTROL PANEL. THIS CONTROL PANEL IS USED TO TURN THE CHILLER SYSTEM ON IN REMOTE STANDBY MODE. ONCE IN REMOTE STANDBY, THE ECS CONTROL SYSTEM PLCS IS ABLE TO REMOTELY START, STOP, AND SEND CHILLER OUTLET TEMPERATURE COMMANDS TO THE CHILLERS. WHEN THE CHILLERS ARE LOCALLY SET TO OFF, THE CHILLERS ARE PREVENTED FROM STARTING EVEN IF A REMOTE START COMMAND IS ISSUED FROM THE ECS CONTROL PLCS. IN BOTH LOCAL AND REMOTE MODES THE CHILLER OPERATION IS SUBJECT TO THE CHILLER CONTROLS SAFETY PROTECTION FEATURES. WHEN A START COMMAND IS RECEIVED FROM THE ECS SCADA THE ECS CONTROL PLCS ISSUES A START SIGNAL TO THE CHILLER CONTROL PANEL AND SENDS A SUPPLY WATER/GLYCOL SETPOINT OF 31 DEGF (ADJUSTABLE IN CODE) TO EACH OF THE CHILLER CONTROL PANELS. THE CHILLER CONTROL PANEL THEN OPENS THE CHILLED AND CONDENSER WATER VALVES, AND WAITS FOR VERIFICATION OF CHILLED AND CONDENSER WATER FLOW BEFORE STARTING THE COMPRESSOR. WHEN A STOP COMMAND IS RECEIVED FROM THE ECS SCADA SYSTEM, THE ECS CONTROL PLCS WILL COMMAND THE CHILLER CONTROL PANEL TO STOP.
CHILLER INTERLOCKS:	ALL OF THE ECS CHILLERS SHALL BE INTERLOCKED WITH THE WATER/GLYCOL PUMPS AND THE COOLING TOWER CONTROLS. A CHILLER CAN ONLY BE STARTED WHEN EITHER OF THE COOLING TOWER PUMPS ARE RUNNING, EITHER OF THE WATER/GLYCOL PUMPS RUNNING, THE CONDENSER WATER FLOW HAS BEEN ESTABLISHED, AND THE WATER/GLYCOL FLOW HAS BEEN ESTABLISHED.
CHILLER STAGING:	THE ON/OFF STATE FOR CHILLERS 1,2, AND 3 SHALL BE DETERMINED BY THE WATER/GLYCOL SUPPLY TEMPERATURE. DURING NORMAL OPERATION THE ECS CONTROL SYSTEM SHALL SEND A WATER/GLYCOL TEMPERATURE SETPOINT OF 31 DEGF (CONFIGURABLE IN CODE) TO EACH OF THE THREE CHILLERS. EACH OF THE CHILLER SYSTEMS SHALL CONTROL THEIR WATER/GLYCOL SUPPLY TEMPERATURES USING THE WATER/GLYCOL SUPPLY TEMPERATURE TO THE COOLING CHAMBERS AS FEEDBACK. WHEN THE CHILLER AND WATER/GLYCOL SYSTEMS ARE STARTED THE ECS CONTROL SYSTEM SHALL STAGGER START EACH OF THE ECS CHILLERS DEPENDING ON THE HEAT LOADS OF THE ECS SYSTEM COOLING CHAMBERS. WHEN A CHILLER IS COMMANDED TO START, THE CHILLER SHALL START AT ITS MINIMUM LOADING. EACH CHILLER SHALL THEN MODULATE ITS CAPACITY BASED ON THE WATER GLYCOL SUPPLY TEMPERATURE. WHEN THE CURRENTLY OPERATING CHILLERS ARE UNABLE TO HOLD THE TEMPERATURE SETPOINT AND THE TEMPERATURE RISES ABOVE THE CONTROL TEMPERATURE SETPOINT PLUS A DEADBAND OF +/-1.0 DEGF (CONFIGURABLE IN CODE), THE ECS CONTROL PLC SHALL START ANOTHER CHILLER AT ITS MINIMUM LOAD. THE CURRENTLY STARTED CHILLER SHALL THEN BEGIN TO MODULATE ITS CAPACITY UNTIL THE CONDENSER WATER SUPPLY TEMPERATURE IS WITHIN A DEAD BAND OF+/-1.0 DEGF (CONFIGURABLE IN CODE). THE CONTROL SYSTEM SHALL THEN MAINTAIN THE WATER/GLYCOL TEMPERATURE UNTIL THE FEEDBACK TEMPERATURE MOVES OUTSIDE THE DEADBAND OF THE SETPOINT. WHEN THE WATER/GLYCOL TEMPERATURE FALLS BELOW THE CONTROL TEMPERATURE SETTING MINUS A DEADBAND OF +/-1.0 DEGF (CONFIGURABLE IN CODE), THE ECS CONTROL PLC WILL SHUT DOWN THE LAST CHILLER THAT WAS STARTED ONCE THE CHILLER HAS REACHED ITS MINIMUM CAPACITY. ONCE THE CHILLER HAS BEEN TURNED OFF THE CHILLER, NEXT IN LINE, SHALL THEN BEGIN TO MODULATE ITS CAPACITY UNTIL THE CONDENSER WATER SUPPLY TEMPERATURE RISES TO WITHIN A DEAD BAND OF+/-1.0 DEGF (CONFIGURABLE IN CODE). THE CHILLER SYSTEMS SHALL THEN MAINTAIN THE WATER/GLYCOL TEMPERATURE UNTIL THE FEEDBACK TEMPERATURE OUTSIDE THE DEADBAND OF THE SETPOINT. THE DETERMINATION OF WHICH CHILLER SHALL BE TURNED ON AND OFF SHALL BE BASED UPON THE CHILLER RUNTIME HOURS (I.E. LEAST AMOUNT OF HOURS TURNED ON FIRST AND MOST AMOUNT OF HOURS TURNED OFF FIRST). THE PLC SHALL ALSO ALLOW MANUAL OVERRIDE OF THE CHILLER STAGING TO ALLOW THE OPERATOR TO DETERMINE WHICH CHILLERS SHALL BE TURNED ON AND OFF.
CHILLER WATER/GLYCOL TEMPERATURE CONTROL:	IN LOCAL OR REMOTE MODE, EACH CHILLER CONTROL PANEL WILL BE RESPONSIBLE FOR CONTROLLING THE COMPRESSORS AND HOT GAS BYPASS (IF EQUIPPED) TO MAINTAIN THE LEAVING WATER TEMPERATURE USING ITS INTERNAL CONTROL LOOPS.
ECS PLC FAILURE:	IF ONE OF THE PLCS FAILS, DURING OPERATION OF THE CHILLED WATER SYSTEM, THE NON-FAULTED PLC SHALL ASSUME CONTROL OF THE CHILLER AND WATER/GLYCOL SYSTEM EQUIPMENT. THE ECS CONTROL PLC SHALL TURN ON AND OFF THE EQUIPMENT TO MAINTAIN CONTROL OF THE CHILLER AND WATER/GLYCOL SYSTEMS AT THE SAME OPERATIONAL STATE THAT IT WAS AT BEFORE THE PLC FAILURE. THE SYSTEM SHALL NOTIFY THE OPERATOR OF ALL ALARMS, WARNINGS, AND FAULTS BY DISPLAYING THEM ON THE ECS CONTROL ROOM SCADA SYSTEM.
ECS CONTROL AND FEEDBACK:	THE CHILLER AND WATER/GLYCOL SYSTEM SHALL BE TURNED ON AND OFF, BY AN OPERATOR, FROM THE ECS CONTROL ROOM USING THE ECS SCADA SYSTEM. THE ECS CONTROL PLC SHALL MONITOR ALL OF THE CHILLER AND WATER/GLYCOL EQUIPMENT STATUSES AND PROCESS FEEDBACKS AND DISPLAY THEM ON THE ECS SCADA SYSTEM. A DEDICATED SCREEN ON THE ECS SCADA SYSTEM SHALL BE USED TO DISPLAY THE OVERALL LAYOUT OF THE CHILLERS SYSTEM AS WELL AS ALL OF THE PROCESS FEEDBACKS IN THEIR PROPER LOCATIONS WITHIN THE ECS MECHANICAL ROOM. A DEDICATED SCREEN ON THE ECS SCADA SYSTEM SHALL BE USED TO DISPLAY THE OVERALL LAYOUT OF THE WATER/GLYCOL SYSTEM AS WELL AS ALL OF THE PROCESS FEEDBACKS IN THEIR PROPER LOCATIONS WITHIN THE ECS ROOM.

SYM	ZONE	DESCRIPTION	DATE	APPROVED
REVISIONS				

JACOBS
Jacobs Technology Inc.

SIGNATURES		DATE
DRAWN	M. HENNIGH	3/07/14
CHECKED	J. WHITEFORD	3/07/14
SUBMITTED	S. RITTER	3/07/14
ST OF LICENSURE: TN LICENSE NO: 00110556		
APPROVED	G. WARD	3/07/14
	S. HUNT	3/07/14

NATIONAL AERONAUTICS AND SPACE ADMINISTRATION
JOHN F. KENNEDY SPACE CENTER, NASA
KENNEDY SPACE CENTER, FLORIDA

KSC LAUNCH PAD 39-B
ENVIRONMENTAL CONTROL SYSTEM (ECS) REFURBISHMENT
INSTRUMENTATION
SEQUENCE OF OPERATIONS
SHEET 1

FILE NO.	SIZE	DWG.NO.	REV
	F	79K39602	

PCN. NO. 98898 SHEET 185 OF 187

I-102

ICPS BLOWERS SEQUENCE OF OPERATIONS

BLOWERS ICPS #1 AND ICPS #2 (REDUNDANT)

THE ECS FACILITY HAS TWO REDUNDANT CONSTANT SPEED BLOWERS, ICPS BLOWER #1 AND ICPS BLOWER #2 (REDUNDANT), WHICH SUPPLY PRESSURIZED AIR TO PURGE AIR DUCT ICPS AND PURGE AIR DUCT SPARE #4 . THE REDUNDANT BLOWERS SHALL ONLY BE USED FOR THE NORMAL PURGE AIR FLOW. DURING HAZOPS WHERE GN2 IS SUPPLIED TO THE ICPS PURGE AIR DUCT, THE BLOWERS SHALL BE SHUT DOWN AND ISOLATED FROM THE GN2 USING A SERIES OF MANUAL AND MOTORIZED VALVES (SEE THE SUPPLY AIR/GN2 DUCT SEQUENCE OF OPERATIONS).

BLOWER START/STOP OPERATION:	A LOCAL/OFF/REMOTE SWITCH MOUNTED IN EACH OF THE BLOWER MOTOR STARTERS IS USED TO PUT THE BLOWER MOTORS IN LOCAL MODE, OFF MODE OR REMOTE MODE. – IN LOCAL MODE, THE OPERATOR IS ABLE TO START/ STOP THE BLOWER FROM THE BLOWER'S MOTOR STARTER. IN THIS MODE BOTH OF THE ICPS DUMP VALVES MUST TO BE SET IN FULL BY–PASS (FULLY OPEN). LOCAL MODE SHALL BE USED FOR MAINTENANCE AND CHECKOUT OF THE BLOWER SYSTEMS AND IS NOT MEANT FOR ACTUAL OPERATION OF THE ECS SYSTEM. AFTER A LOCAL START COMMAND IS ISSUED THE BLOWER SHALL START AND OPERATE CONTINUOUSLY AT CONSTANT SPEED. – IN OFF MODE, THE BLOWER IS GIVEN AN UNCONDITIONAL STOP SIGNAL WHICH SHALL INHIBIT THE BLOWER FROM STARTING. LOCAL AND REMOTE START SIGNALS ARE IGNORED IN OFF MODE. – IN REMOTE MODE, THE OPERATOR IS ABLE TO START/STOP EACH OF THE BLOWERS REMOTELY USING THE ECS CONTROL SYSTEM SCADA. WHEN THE OPERATOR ISSUES A START COMMAND FROM THE ECS SCADA SYSTEM, THE REDUNDANT ECS PLC SYSTEM SETS A START/STOP DIGITAL OUTPUT WHICH SIGNALS A BLOWER TO TURN ON. WHEN THE OPERATOR ISSUES A STOP COMMAND FROM THE ECS SCADA SYSTEM, THE REDUNDANT ECS PLC SYSTEM RESETS THE START/STOP DIGITAL OUTPUT WHICH SIGNALS THE BLOWER TO STOP.
BLOWER PRESSURE CONTROL OPERATION:	THE BLOWER PRESSURE CONTROL IS PERFORMED WITHIN THE ECS CONTROL PLCS. A REDUNDANT PAIR OF STATIC PRESSURE TRANSDUCERS (PT–121A AND PT–121B) IS USED AS THE FEEDBACK FOR THE PRESSURE CONTROL ALGORITHM WHICH CONTROLS THE BLOWER OUTLET PRESSURE. THE OUTLET PRESSURE SETPOINT IS ADJUSTABLE BY THE OPERATOR FROM THE ECS SCADA SYSTEM. CONTROL OF THE OUTLET PRESSURE IS ACHIEVED USING ONE OF TWO REDUNDANT DUMP VALVES THAT ARE LOCATED DOWN STREAM OF BOTH ICPS BLOWERS. DURING BLOWER STARTUP, BOTH OF THE DUMP VALVES ARE COMMANDED FULL OPEN. WHEN THE BLOWER HAS ACHIEVED FULL SPEED, THE PRIMARY DUMP VALVE MODULATES TO CONTROL THE BLOWER OUTLET PRESSURE TO THE OPERATOR SETPOINT ENTERED FROM THE ECS SCADA SYSTEM. THE PRESSURE CONTROL ALGORITHM FUNCTIONS AS FOLLOWS: WHEN THE PRESSURE RISES ABOVE THE CONTROL PRESSURE SETPOINT PLUS AN 0.25 PSIA DEADBAND(CONFIGURABLE IN CODE), THE ECS CONTROL PLC MODULATES THE ICPS DUMP VALVE OPEN UNTIL THE OUTLET PRESSURE IS WITHIN THE SETPOINT PRESSURE +/– 0.25 PSIA DEADBAND(CONFIGURABLE IN CODE). WHEN THE OUTLET PRESSURE FALLS BELOW THE CONTROL PRESSURE SETTING MINUS 0.25 PSIA DEADBAND(CONFIGURABLE IN CODE), THE ECS CONTROL PLC MODULATES THE ICPS DUMP VALVE CLOSED UNTIL THE OUTLET PRESSURE IS WITHIN THE SETPOINT PRESSURE +/– 0.25 PSIA DEADBAND (CONFIGURABLE IN CODE). WHILE THE OULET PRESSURE REMAINS WITHIN THE SETPOINT PRESSURE +/– 0.25 PSIA DEADBAND, THE ECS CONTROL PLC MAINTAINS THE CURRENT DUMP VALVE POSITION UNTIL THE FEEDBACK PRESSURE MOVES OUTSIDE THE DEADBAND OF THE SETPOINT. IF THE DUMP VALVE REACHED FULL OPEN OR FULL CLOSED AND THE OUTLET PRESSURE IS STILL OUTSIDE OF THE SETPOINT +/– THE DEADBAND, THE ECS CONTROL PLC GENERATES AN ALARM TO THE ECS SCADA SYSTEM NOTIFYING THE OPERATOR OF THE PRESSURE CONTROL FAULT. IF CLOSURE OF THE PRIMARY DUMP VALVE FAILS TO RAISE THE DISCHARGE PRESSURE, AND THE PRIMARY DUMP VALVE IS NOT FULLY CLOSED, THE PLC SHALL DECLARE THAT THE VALVE IS IN A FAULTED STATE. THIS FAULT SHALL GENERATE AN ALARM ON THE SCADA, AND THE SECONDARY DUMP VALVE SHALL BE USED FOR CONTROL.
BLOWER INTERLOCKS:	THE ICPS BLOWER MOTORS ARE INTERLOCKED IN THE ECS PLCS TO PREVENT ICPS BLOWER OPERATION IF THE AIR SUPPLY CONFIGURATION IS IN HAZOPS MODE, ANY OF THE ICPS BLOWER SUPPLY AIR VALVES ARE CLOSED, OR AN ACTIVE ICPS BLOWER FAULT IS PRESENT. ALL ICPS BLOWER FAULTS MUST BE CLEARED AND INTERLOCKS SATISFIED BEFORE THE ECS CONTROL PLC WILL ALLOW A REMOTE START SIGNAL TO BE SENT TO THE RESPECTIVE ICPS BLOWER MOTOR STARTER. IF A BLOWER MOTOR INTERLOCK IS REMOVED DURING BLOWER MOTOR OPERATION THE RUN COMMAND WILL BE RESET AND THE BLOWER MOTOR STOPPED.
BLOWER FAULT:	EACH ICPS BLOWER MOTOR INCORPORATES OVERLOAD, SURGE, AND OVER TEMPERATURE PROTECTION. THE ECS CONTROL SYSTEM MONITORS THE ON/OFF STATES OF THE ICPS BLOWERS TO DETERMINE IF A FAULT OCCURS. IF AN ICPS BLOWER IS COMMANDED ON, AND THE ON/OFF STATUS FEEDBACK TO THE ECS CONTROL PLC DOES NOT MATCH THE COMMAND STATE AFTER 10 SEC. (CONFIGURABLE IN CODE), THE ECS CONTROL PLC AUTOMATICALLY REGISTERS A FAULT. THIS FAULT SHALL BE DISPLAYED ON THE ECS CONTROL SCADA AND UPON FAULT DETECTION, THE ICPS BLOWER COMMAND SIGNAL FROM THE ECS CONTROL SYSTEM IS TURNED OFF. THE ECS CONTROL PLCS MONITOR THE BLOWER FEEDBACK CURRENT AND USE THIS FEEDBACK TO MONITOR THE HEALTH OF THE RESPECTIVE ICPS BLOWER MOTOR DURING NORMAL OPERATIONS. THE ECS CONTROL PLC INDICATES AN ICPS BLOWER FAULT IF THE ICPS BLOWER CURRENT RISES ABOVE TBD AMPS OR FALLS BELOW TBD AMPS. IF AN ICPS BLOWER SHUTS DOWN ON A FAULT THE ECS CONTROL PLC AUTOMATICALLY STARTS THE REDUNDANT BLOWER.
ECS PLC FAILURE:	IF ONE OF THE PLCS FAILS DURING OPERATION OF THE ICPS BLOWERS THE NON–FAULTED PLC ASSUMES CONTROL OF THE BLOWER AND PRESSURE CONTROL EQUIPMENT. THE ECS CONTROL PLC TURNS ON AND OFF THE REDUNDANT EQUIPMENT TO MAINTAIN CONTROL OF THE ICPS PURGE AIR SUPPLY SYSTEM AT THE SAME OPERATIONAL STATE THAT IT WAS AT BEFORE THE PLC FAILURE. THE SYSTEM NOTIFIES THE OPERATOR OF ALL ALARMS, WARNINGS, AND FAULTS BY DISPLAYING THEM ON THE ECS CONTROL ROOM SCADA SYSTEM.
ECS CONTROL AND FEEDBACK:	THE ICPS PURGE AIR SUPPLY SYSTEM IS OPERATED FROM THE ECS CONTROL ROOM USING THE ECS SCADA SYSTEM. THE ECS CONTROL PLC MONITORS ALL OF THE ICPS PURGE AIR SUPPLY EQUIPMENT STATUSES AND PROCESS FEEDBACKS AND DISPLAYS THEM ON THE ECS SCADA SYSTEM. A DEDICATED SCREEN ON THE ECS SCADA SYSTEM IS USED TO DISPLAY THE OVERALL LAYOUT OF THE ICPS PURGE AIR SUPPLY SYSTEM AS WELL AS ALL OF THE PROCESS FEEDBACKS IN THIER PROPER LOCATIONS WITHIN THE ECS MECHANICAL ROOM.

NORTH, SOUTH, STANDBY BLOWERS SEQUENCE OF OPERATIONS

BLOWERS NORTH, SOUTH, AND STANDBY

THE ECS FACILITY HAS THREE REDUNDANT CONSTANT SPEED BLOWERS, NORTH BLOWER, SOUTH BLOWER, AND STANDBY BLOWER. THE NORTH BLOWER SENDS COMPRESSED SUPPLY AIR TO PURGE AIR DUCTS CS/IT, CS/FS, SM, SPARE DUCT 5–N, AND CS/AFT. THE SOUTH BLOWER SENDS COMPRESSED SUPPLY AIR TO PURGE AIR DUCTS LAS, EC/CC, CS/ENG, SPARE DUCT 9–S, AND SPARE DUCT 10–S. THE STANDBY BLOWER ACTS AS THE REDUNDANT BLOWER FOR EITHER THE NORTH OR SOUTH BLOWER DURING NORMAL OPERATION.
THE NORTH, SOUTH, AND STANDBY BLOWERS SHALL ONLY BE USED FOR THE NORMAL PURGE AIR FLOW. DURING HAZOPS WHERE GN2 IS SUPPLIED TO THE PURGE AIR DUCTS THE BLOWERS SHALL BE SHUT DOWN AND ISOLATED FROM THE GN2 USING A SERIES OF MANUAL AND MOTORIZED VALVES (SEE THE SUPPLY AIR/GN2 DUCT SEQUENCE OF OPERATIONS). WITH THE ECS VALVES IN THE PROPER CONFIGURATION IT IS POSSIBLE FOR THE BLOWERS TO OPERATE THE NORTH DUCTS IN HAZOPS AND THE SOUTH DUCTS IN NORMAL OPERATION AND VICE–VERSA.

BLOWER START/STOP OPERATION:	A LOCAL/OFF/REMOTE SWITCH MOUNTED IN EACH OF THE BLOWER MOTOR STARTERS IS USED TO PUT THE BLOWER MOTORS IN LOCAL MODE, OFF MODE OR REMOTE MODE. – IN LOCAL MODE, THE OPERATOR IS ABLE TO START/ STOP THE BLOWER FROM THE BLOWER'S MOTOR STARTER. IN THIS MODE BOTH OF THE NORTH DUMP VALVES OR BOTH OF THE SOUTH DUMP VALVES MUST BE SET IN FULL BYPASS (FULLY OPEN) DEPENDING ON WHICH BLOWER IS TO BE LOCALLY STARTED. IF THE STANDBY BLOWER IS TO BE STARTED LOCALLY, THE OPERATOR MUST SET THE ECS CONFIGURATION VALVES SO THAT THE STANDBY BLOWER USES EITHER THE NORTH AIR SUPPLY CIRCUIT AND DUMP VALVES OR THE SOUTH AIR SUPPLY CIRCUIT AND DUMP VALVES. LOCAL MODE SHALL BE USED FOR MAINTENANCE AND CHECKOUT OF THE BLOWER SYSTEMS AND IS NOT MEANT FOR ACTUAL OPERATION OF THE ECS SYSTEM. AFTER A LOCAL START COMMAND IS ISSUED THE BLOWER SHALL START AND OPERATE CONTINUOUSLY AT CONSTANT SPEED. – IN OFF MODE, THE BLOWER IS GIVEN AN UNCONDITIONAL STOP SIGNAL WHICH SHALL INHIBIT THE BLOWER FROM STARTING. LOCAL AND REMOTE START SIGNALS ARE IGNORED IN OFF MODE. – IN REMOTE MODE, THE OPERATOR IS ABLE TO START/STOP EACH OF THE BLOWERS REMOTELY USING THE ECS CONTROL SYSTEM SCADA. WHEN THE OPERATOR ISSUES A START COMMAND FROM THE ECS SCADA SYSTEM, THE REDUNDANT ECS PLC SYSTEM SETS A START/STOP DIGITAL OUTPUT WHICH SIGNALS A BLOWER TO TURN ON. WHEN THE OPERATOR ISSUES A STOP COMMAND FROM THE ECS SCADA SYSTEM THE REDUNDANT ECS PLC SYSTEM RESETS THE START/STOP DIGITAL OUTPUT WHICH SIGNALS A BLOWER TO STOP.
BLOWER PRESSURE CONTROL OPERATION:	THE BLOWER PRESSURE CONTROL IS PERFORMED WITHIN THE ECS CONTROL PLCS. REDUNDANT PAIRS OF STATIC PRESSURE TRANSDUCERS, TWO FOR THE NORTH CIRCUIT (PT–101A AND PT–101B) AND TWO FOR THE SOUTH CIRCUIT (PT–111A AND PT–111B), SHALL BE USED AS THE FEEDBACK FOR THE PRESSURE CONTROL ALGORITHM WHICH CONTROLS THE BLOWER OUTLET PRESSURE. THE OUTLET PRESSURE SETPOINT IS ADJUSTABLE BY THE OPERATOR FROM THE ECS SCADA SYSTEM. CONTROL OF THE OUTLET PRESSURE IS ACHIEVED USING ONE OF TWO REDUNDANT DUMP VALVES THAT ARE LOCATED DOWN STREAM OF THE NORTH AND SOUTH BLOWERS. DURING BLOWER STARTUP BOTH DUMP VALVES ARE COMMANDED FULL OPEN. WHEN THE BLOWER HAS ACHIEVED FULL SPEED, THE PRIMARY DUMP VALVE IS MODULATED TO CONTROL THE BLOWER OUTLET PRESSURE TO THE OPERATOR SETPOINT ENTERED FROM THE ECS SCADA SYSTEM. THE PRESSURE CONTROL ALGORITHM FUNCTIONS AS FOLLOWS: WHEN THE PRESSURE RISES ABOVE THE CONTROL PRESSURE SETPOINT PLUS 0.25 PSIA DEADBAND(CONFIGURABLE IN CODE), THE ECS CONTROL PLC BEGINS TO MODULATE THE DUMP VALVE OPEN UNTIL THE OUTLET PRESSURE IS WITHIN THE SETPOINT PRESSURE +/– 0.25 PSIA DEADBAND(CONFIGURABLE IN CODE). WHEN THE OUTLET PRESSURE FALLS BELOW THE CONTROL PRESSURE SETTING MINUS AN 0.25 PSIA DEADBAND (CONFIGURABLE IN CODE), THE ECS CONTROL PLC BEGINS TO MODULATE THE DUMP VALVE CLOSED UNTIL THE OUTLET PRESSURE IS WITHIN THE SETPOINT PRESSURE +/– 0.25 PSIA DEADBAND (CONFIGURABLE IN CODE). WHILE THE OUTLET PRESSURE REMAINS WITHIN THE SETPOINT PRESSURE +/– 0.25 PSIA DEADBAND (CONFIGURABLE IN CODE), THE ECS CONTROL PLC MAINTAINS THE CURRENT DUMP VALVE POSITION UNTIL THE FEEDBACK PRESSURE MOVES OUTSIDE THE DEADBAND OF THE SETPOINT. IF THE DUMP VALVE REACHES FULL OPEN OR FULL CLOSED AND THE OUTLET PRESSURE IS STILL OUTSIDE OF THE SETPOINT +/– THE DEADBAND, THE ECS CONTROL PLC GENERATES AN ALARM, TO THE ECS SCADA SYSTEM, NOTIFYING THE OPERATOR OF THE PRESSURE CONTROL FAULT. IF CLOSURE OF THE PRIMARY DUMP VALVE FAILS TO RAISE THE DISCHARGE PRESSURE, AND THE PRIMARY DUMP VALVE IS NOT FULLY CLOSED, THE PLC SHALL DECLARE THAT THE VALVE IS IN A FAULTED STATE. THIS FAULT SHALL GENERATE AN ALARM ON THE SCADA, AND THE SECONDARY DUMP VALVE SHALL BE USED FOR CONTROL.
BLOWER INTERLOCKS:	THE NORTH, SOUTH, AND STANDBY BLOWER MOTORS ARE INTERLOCKED IN THE ECS PLCS TO PREVENT BLOWER OPERATION IF THE AIR SUPPLY CONFIGURATION IS IN HAZOPS MODE, ANY OF THE BLOWER SUPPLY AIR VALVES ARE CLOSED, OR AN ACTIVE BLOWER FAULT IS PRESENT. ALL BLOWER FAULTS MUST BE CLEARED AND INTERLOCKS SATISFIED BEFORE THE ECS CONTROL PLC WILL ALLOW A REMOTE START SIGNAL TO BE SENT TO THE RESPECTIVE BLOWER MOTOR STARTER.
BLOWER FAULT:	EACH NORTH, SOUTH, AND STANDBY BLOWER MOTOR INCORPORATES OVERLOAD, SURGE, AND OVER TEMPERATURE PROTECTION. THE ECS CONTROL SYSTEM MONITORS THE ON/OFF STATES OF THE BLOWERS TO DETERMINE IF A FAULT OCCURS. IF A BLOWER IS COMMANDED ON, AND THE ON/OFF STATUS FEEDBACK TO THE ECS CONTROL PLC DOES NOT MATCH THE COMMAND STATE AFTER 10 SEC. (CONFIGURABLE IN CODE), THE ECS CONTROL PLC AUTOMATICALLY REGISTERS A FAULT. THIS FAULT IS DISPLAYED ON THE ECS CONTROL SCADA. UPON FAULT DETECTION, THE BLOWER COMMAND SIGNAL FROM THE ECS CONTROL SYSTEM IS TURNED OFF. THE ECS CONTROL PLCS MONITOR THE BLOWER FEEDBACK CURRENT AND USES THIS FEEDBACK TO MONITOR THE HEALTH OF THE NORTH, SOUTH, AND STANDBY BLOWER MOTORS DURING NORMAL OPERATIONS. THE ECS CONTROL PLC INDICATES A BLOWER FAULT IF THE BLOWER CURRENT RISES ABOVE TBD AMPS OR FALLS BELOW TBD AMPS. IF A NORTH, SOUTH, OR STANDBY BLOWER SHUTS DOWN ON A FAULT THE ECS CONTROL PLC AUTOMATICALLY STARTS THE REDUNDANT BLOWER.
ECS PLC FAILURE:	IF ONE OF THE PLCS FAILS DURING OPERATION OF THE NORTH, SOUTH, AND STANDBY BLOWERS, THE NON–FAULTED PLC ASSUMES CONTROL OF THE BLOWER AND PRESSURE CONTROL EQUIPMENT. THE ECS CONTROL PLC TURNS ON AND OFF THE REDUNDANT EQUIPMENT TO MAINTAIN CONTROL OF THE BLOWER SYSTEM AT THE SAME OPERATIONAL STATE THAT IT WAS AT BEFORE THE PLC FAILURE. THE ECS PLC SYSTEM NOTIFIES THE OPERATOR OF ALL ALARMS, WARNINGS, AND FAULTS BY DISPLAYING THEM ON THE ECS CONTROL ROOM SCADA SYSTEM.
ECS CONTROL AND FEEDBACK:	THE NORTH AND SOUTH PURGE AIR SUPPLY SYSTEM IS OPERATED FROM THE ECS CONTROL ROOM USING THE ECS SCADA SYSTEM. THE ECS CONTROL PLC MONITORS ALL OF THE NORTH AND SOUTH PURGE AIR SUPPLY EQUIPMENT STATUSES AND PROCESS FEEDBACKS AND DISPLAYS THEM ON THE ECS SCADA SYSTEM. TWO DEDICATED SCREENS ON THE ECS SCADA SYSTEM ARE USED TO DISPLAY THE OVERALL LAYOUT OF THE NORTH AND SOUTH PURGE AIR SUPPLY SYSTEM AS WELL AS ALL OF THE PROCESS FEEDBACKS IN THIER PROPER LOCATIONS WITHIN THE ECS MECHANICAL ROOM.

SYM	ZONE	DESCRIPTION	DATE	APPROVED
REVISIONS				

JACOBS
Jacobs Technology Inc.

SIGNATURES		DATE
DRAWN	M. HENNIGH	3/07/14
CHECKED	J. WHITEFORD	3/07/14
SUBMITTED	S. RITTER	3/07/14
ST OF LICENSURE: TN LICENSE NO: 00110556		
APPROVED	G. WARD	3/07/14
	S. HUNT	3/07/14

NATIONAL AERONAUTICS AND SPACE ADMINISTRATION
JOHN F. KENNEDY SPACE CENTER, NASA
KENNEDY SPACE CENTER, FLORIDA

KSC LAUNCH PAD 39-B
ENVIRONMENTAL CONTROL SYSTEM (ECS) REFURBISHMENT
INSTRUMENTATION
SEQUENCE OF OPERATIONS
SHEET 2

I-103

FILE NO.	SIZE	DWG.NO.	REV
	F	79K39602	
PCN. NO. 98898		SHEET 186 OF 187	

ECS COOLING CHAMBER SEQUENCE OF OPERATIONS

NORTH COOLING CHAMBER, SOUTH COOLING CHAMBER, AND ICPS COOLING CHAMBER

THE NORTH, SOUTH, AND ICPS COOLING CHAMBERS ARE USED TO CONDITION THE PURGE AIR, SUPPLIED BY THE BLOWERS, TO 34 DEGF AND AT 29 GRAINS/LB. THIS CONDITIONED AIR IS THEN DUCTED TO THE NORTH, SOUTH, AND ICPS DISTRIBUTION HEADERS BEFORE FLOWING THROUGH EACH ONE OF THE ECS SYSTEMS 12 DUCTS (REFERENCE THE ECS PURGE AIR SUPPLY P&IDS). EACH OF THE THREE COOLING CHAMBERS CONSISTS OF A PRE-COOL COIL AND A POST-COOL COIL. THE PRE-COOL COIL IS SUPPLIED BY THE COOLING TOWER CONDENSER WATER SYSTEM AND IS USED TO PRE-COOL THE PURGE AIR SUPPLIED BY THE ECS BLOWERS OR THE GN2 PROVIDED BY THE GN2 PRESSURE REDUCING STATION. THE POST-COOL COIL IS THEN USED TO CONDITION THE PURGE SUPPLY AIR TO 34 DEGF AT LESS THAN OR EQUAL TO 29 GRAINS/LB. THE POST-COOL COIL IS SUPPLIED BY THE CHILLER AND WATER/GLYCOL SYSTEM. THE POST-COOL COIL OUTLET TEMPERATURE IS CONTROLLED USING A WATER/GLYCOL BYPASS VALVE WHICH MODULATES THE AMOUNT OF WATER/GLYCOL THROUGH THE POST-COOL COIL. GN2 IS PROVIDED TO ONLY FIVE OUT OF TWELVE DUCTS.

COOLING CHAMBER STARTUP/ SHUTDOWN:	THE COOLING CHAMBER TEMPERATURE CONTROL STARTS AND STOPS AUTOMATICALLY. INTERLOCKS WITHIN THE ECS PLC ARE USED TO ENABLE AND DISABLE THE TEMPERATURE CONTROL DURING ECS SYSTEM STARTUP/SHUTDOWN, NORMAL OPERATION, AND GN2 OPERATION.
COOLING CHAMBER TEMP. CONTROL OPERATION:	THE COOLING CHAMBER PURGE AIR/GN2 TEMPERATURE CONTROL IS PERFORMED WITHIN THE ECS CONTROL PLCS. REDUNDANT TEMPERATURE MEASUREMENTS ARE USED AS THE FEEDBACK FOR THE TEMPERATURE CONTROL ALGORITHM WHICH CONTROLS THE PURGE AIR OUTLET TEMPERATURE. THE COOLING CHAMBER OUTLET TEMPERATURE SETPOINT IS ADJUSTABLE BY THE OPERATOR FROM THE ECS SCADA SYSTEM. CONTROL OF THE OUTLET TEMPERATURE IS ACHIEVED USING A WATER/GLYCOL BY-PASS VALVE THAT IS LOCATED UPSTREAM OF THE POST-COOL COILS FOR EACH OF THE THREE COOLING CHAMBERS. WHILE THE COOLING CHAMBER INTERLOCKS ARE NOT SATISFIED, THE COOLING CHAMBER TEMPERATURE CONTROL VALVE IS COMMANDED TO MAINTAIN ITS CURRENT POSITION. WHEN ALL OF THE INTERLOCKS HAVE BEEN SATISFIED, THE COOLING CHAMBER TEMPERATURE CONTROL VALVE MODULATES TO CONTROL THE PURGE AIR/GN2 OUTLET TEMEPERATURE TO THE SETPOINT ENTERED BY THE OPERATOR +/- 0.5 DEGF DEADBAND (ADJUSTABLE IN CODE). THE TEMPERATURE CONTROL ALGORITHM FUNCTIONS FOR EACH COOLING CHAMBER AS FOLLOWS: WHEN THE OUTLET PURGE AIR TEMPERATURE RISES ABOVE THE CONTROL TEMPERATURE SETPOINT PLUS +/-0.5 DEGF DEADBAND (CONFIGURABLE IN CODE), THE ECS CONTROL PLC MODULATES THE POST-COOL COIL BYPASS VALVE OPEN UNTIL THE OUTLET PURGE AIR TEMPERATURE IS WITHIN THE SETPOINT TEMPERATURE +/- 0.5 DEGF DEADBAND (CONFIGURABLE IN CODE). WHEN THE OUTLET PURGE AIR TEMPERATURE FALLS BELOW THE CONTROL TEMPERATURE SETPOINT MINUS AN 0.5 DEGF DEADBAND (CONFIGURABLE IN CODE), THE ECS CONTROL PLC MODULATES THE POST-COOL COIL BY-PASS VALVE CLOSED UNTIL THE OUTLET TEMPERATURE IS WITHIN THE SETPOINT TEMPERATURE +/- 0.5 DEGF DEADBAND (CONFIGURABLE IN CODE). WHILE THE OULET TEMPERATURE REMAINS WITHIN THE SETPOINT TEMPERATURE +/- 0.5 DEGF DEADBAND, THE ECS CONTROL PLC MAINTAINS THE CURRENT POST-COOL COIL BY-PASS VALVE POSITION UNTIL THE FEEDBACK TEMPERATURE MOVES OUTSIDE THE DEADBAND OF THE SETPOINT. IF THE POST-COOL COIL BYPASS VALVE REACHES FULL OPEN OR FULL CLOSED AND THE OUTLET PURGE AIR/GN2 TEMPERATURE IS STILL OUTSIDE OF THE SETPOINT +/- THE DEADBAND, THE ECS CONTROL PLC GENERATES AN ALARM TO THE ESC SCADA SYSTEM NOTIFYING THE OPERATOR OF THE TEMPERATURE CONTROL FAULT.
COOLING CHAMBER INTERLOCKS:	THE COOLING CHAMBER TEMPERATURE CONTROL IS INTERLOCKED, WITHIN THE ECS CONTROL PLCS, SO THAT THE TEMPERATURE IS ONLY CONTROLLED WHEN THERE IS COOLING WATER FLOW, WATER/GLYCOL FLOW, AND PURGE AIR SUPPLY OR GN2 FLOW. IF ANY OF THESE INTERLOCKS ARE NOT SATISFIED THE POST-COOL COIL TEMPERATURE CONTROL VALVE REMAINS IN PLACE.
ECS PLC FAILURE:	IF ONE OF THE PLCS FAIL, DURING OPERATION OF THE COOLING CHAMBER TEMPERATURE CONTROL, THE NON FAULTED PLC SHALL ASSUME CONTROL OF THE COOLING CHAMBER CONTROL EQUIPMENT. THE NON-FAULTED PLC SHALL MAINTAIN TEMPERATURE OF THE PURGE AIR/GN2 SUPPLY AT THE SAME TEMPERATURE SETPOINT THAT IT WAS AT BEFORE THE PLC FAILURE. WHEN A FAILURE OCCURS, THE ECS CONTROL SYSTEM NOTIFIES THE OPERATOR OF ALL ALARMS, WARNINGS, AND FAULTS BY DISPLAYING THEM ON THE ECS CONTROL ROOM SCADA SYSTEM.
ECS CONTROL AND FEEDBACK:	THE COOLING CHAMBER TEMPERATURE CONTROL IS OPERATED FROM THE ECS CONTROL ROOM USING THE ECS SCADA SYSTEM. THE ECS CONTROL PLC MONITORS ALL OF THE NORTH, SOUTH, AND ICPS COOLING CHAMBER EQUIPMENT STATUSES AND PROCESS FEEDBACKS. THE COOLING CHAMBER STATUSES AND FEEDBACKS, FOR EACH COOLING CHAMBER ARE DISPLAYED ON BOTH THE COOLING SYSTEM AND PURGE AIR SUPPLY SCADA SCREENS.

SUPPLY AIR DUCT CHANGEOVER SEQUENCE OF OPERATIONS

NORMAL PURGE, HAZOPS GN2

THE SUPPLY AIR CHANGEOVER BETWEEN AIR AND GN2 OPERATIONS IS ACHIEVED BY SETTING A SERIES OF MANUAL AND MOTORIZED VALVES. THESE VALVES SHALL ONLY BE OPERATED WHEN ALL OF THE ECS BLOWER MOTORS ARE SHUT DOWN AND THE GN2 SUPPLY IS LOCALLY TURNED OFF.

CHANGEOVER FROM AIR TO GN2 OPERATION:	CHANGEOVER FROM AIR OPERATION TO GN2 OPERATION IS ACHIEVED USING THE FOLLOWING PROCEDURE: - VERIFY AND/OR SHUTDOWN ALL ECS BLOWER SYSTEMS. - CLOSE ALL MANUAL VALVES TO THE SUPPLY DUCTS THAT WILL NOT BE USED FOR GN2 OPERATION. THE DUCTS THAT WILL BE ISOLATED WILL BE DECIDED BY GROUND CONTROL OPERATIONS. -VERIFY THAT ALL MANUAL DUCT ISOLATION VALVES ARE OPEN FOR THE DUCTS WHICH WILL BE USED DURING GN2 OPERATIONS - CLOSE MOTORIZED AIR SUPPLY VALVES MOV-008, MOV-011, MOV-012, MOV-013, MOV-017, MOV-018, MOV-020, AND MOV-021. - CLOSE DUMP VALVES PCV-010A, PCV-010B, PCV-015A, AND PCV-015B. - OPEN MOTORIZED BLEED VALVES MOV-019, MOV-022, MOV--023. - VERIFY THE ECS BUILDING GN2 SUPPLY PRESSURE IS AT 150PSI. - OPEN THE MANUAL GN2 ISOLATION VALVES. THE ECS SYSTEM IS NOW READY FOR GN2 OPERATION. TO CONTROL THE DUCT GN2 SUPPLIES SEE THE THE "SUPPLY AIR/GN2 DUCT SEQUENCE OF OPERATIONS".
CHANGEOVER FROM GN2 TO AIR OPERATION:	CHANGEOVER FROM AIR OPERATION TO GN2 OPERATION IS ACHIEVED USING THE FOLLOWING PROCEDURE: - VERIFY AND/OR SHUTDOWN THE GN2 SUPPLY CONTROL AND ISOLATE THE GN2 USING MOV-701A AND MOV-701B. - CLOSE MANUAL GN2 VALVES TO ISOLATE GN2 FROM THE SUPPLY DUCTS. -VERIFY THAT ALL MANUAL DUCT ISOLATION VALVES ARE OPEN FOR THE DUCTS WHICH WILL BE USED DURING AIR OPERATIONS - CLOSE MOTORIZED BLEED VALVES MOV-019, MOV-022, MOV--023. - OPEN MOTORIZED AIR SUPPLY VALVES MOV-008, MOV-013, MOV-017, MOV-018, MOV-020, AND MOV-021. (OPEN MOV-011 AND MOV-012 IF THE STANDBY BLOWER IS TO BE USED.) THE ECS SYSTEM IS NOW READY FOR AIR OPERATION. TO CONTROL THE DUCT AIR SUPPLIES SEE THE "SUPPLY AIR/GN2 DUCT SEQUENCE OF OPERATIONS".

SUPPLY AIR/GN2 DUCT SEQUENCE OF OPERATIONS

PURGE AIR DUCTS CS/IT, CS/FS, SM, SPARE DUCT 5-N, CS/AFT, LAS, EC/CC, CS/ENG, SPARE DUCT 9-S, SPARE DUCT 10-S, ICPS, AND SPARE DUCT 4-L

THE 12 ECS PURGE AIR SUPPLY DUCTS ARE USED TO SUPPLY THE FINAL CONDITIONED PURGE AIR OR GN2 TO THE MOBILE LAUNCHER INTERFACE WHILE INSTALLED ON THE LAUNCH PAD. ALL OF THE 12 PURGE AIR DUCTS HAVE INDEPENDENT CONTROLS WHICH CONTROL THE PURGE AIR FLOW RATE, TEMPERATURE TO THE ML INTERFACE. FIVE OF THE DUCTS (CS/FS, SM, CS/AFT, CS/ENG, AND ICPS) ALSO HAVE HUMIDITY CONTROL WHICH IS PRIMARILY USED DURING PYRO OPERATIONS (HAZARDOUS OPERATIONS, HAZOPS). THE DUCT SUPPLY AIR CONTROL CODE IS CONTAINED WITHIN THE REDUNDANT ECS CONTROL PLC SYSTEM LOCATED IN THE ECS CONTROL ROOM. THE FOLLOWING CONTROL DESCRIPTIONS DESCRIBE THE OPERATIONAL CHARACTERISTICS OF THE 12 ECS SUPPLY AIR DUCTS.

SUPPLY DUCT START/STOP OPERATION:	DURING NORMAL OR GN2 OPERATION EACH DUCT IS SEPARATELY ENABLED OR DISABLED FROM THE ECS SCADA SYSTEM DEPENDING ON THE OPERATIONAL CONFIGURATION DETERMINED DURING THE ECS FACILITY STARTUP. WHEN A DUCT IS IN THE ENABLE STATE THE OPERATOR IS ABLE TO SET AIR FLOW SETPOINTS, AIR TEMPERATURE SETPOINTS, AND IF EQUIPPED, ENABLE/DISABLE HUMIDITY CONTROL TO SET AIR HUMIDITY SETPOINTS. WHEN A DUCT IS IN THE DISABLED STATE ALL FLOW, TEMPERATURE, AND HUMIDITY CONTROLS ARE DISABLED AND THE AIR SUPPLY DUCT IS ISOLATED FROM THE REST OF THE SYSTEM.
SUPPLY DUCT FLOW CONTROL OPERATION:	THE PURGE AIR FLOW CONTROL IS PERFORMED WITHIN THE ECS CONTROL PLCS. A REDUNDANT PAIR OF AIR FLOW MEASUREMENTS ON EACH OF THE 12 PURGE AIR DUCTS ARE USED AS FEEDBACK TO THE FLOW CONTROL ALGORITHMS WHICH CONTROL EACH OF THE 12 DUCT PURGE AIR FLOWS. THE PURGE AIR FLOW SETPOINT IS ADJUSTABLE BY THE OPERATOR FROM THE ECS SCADA SYSTEM. CONTROL OF THE PURGE AIR FLOW IS ACHIEVED USING A SINGLE FAIL IN PLACE FLOW CONTROL VALVE THAT IS LOCATED DIRECTLY DOWNSTREAM OF THE HEATER AND HUMIDITY CONTROLS EQUIPMENT. AFTER PURGE AIR FLOW HAS BEEN COMMANDED TO START, BY THE OPERATOR, THE ECS CONTOL PLC STARTS MODULATING THE DUCT FLOW CONTROL VALVE TO CONTROL THE THE PURGE AIR FLOW TO THE OPERATOR SETPOINT ENTERED FROM THE ECS SCADA SYSTEM. THE DUCT AIR FLOW CONTROL ALGORITHM FUNCTIONS AS FOLLOWS: WHEN THE PURGE AIR FLOW RISES ABOVE THE AIR FLOW SETPOINT PLUS +/-2.5 LBS/MIN DEADBAND (CONFIGURABLE IN CODE), THE ECS CONTROL PLC MODULATES THE FLOW CONTROL VALVE CLOSED UNTIL THE PURGE AIR FLOW IS WITHIN THE FLOW SETPOINT +/- 2.5 LBS/MIN DEADBAND (CONFIGURABLE IN CODE). WHEN THE PURGE AIR FLOW FALLS BELOW THE FLOW SETPOINT MINUS 2.5 LBS/MIN DEADBAND (CONFIGURABLE IN CODE), THE ECS CONTROL PLC MODULATES THE FLOW CONTROL VALVE OPEN UNTIL THE PURGE AIR FLOW IS WITHIN THE FLOW SETPOINT +/- 2.5 LBS/MIN DEADBAND (CONFIGURABLE IN CODE). WHILE THE PURGE AIR FLOW REMAINS WITHIN THE FLOW SETPOINT +/- 2.5 LBS/MIN DEADBAND, THE ECS CONTROL PLC MAINTAINS THE CURRENT FLOW CONTROL VALVE POSITION UNTIL THE PURGE AIR FLOW FEEDBACK MOVES OUTSIDE THE DEADBAND OF THE SETPOINT. IF THE FLOW CONTROL VALVE HAS REACHED FULL OPEN OR FULL CLOSED AND THE PURGE AIR FLOW IS STILL OUTSIDE OF THE SETPOINT +/- THE DEADBAND, OR THE FLOW CONTROL VALVE HAS FAULTED THE ECS CONTROL PLC GENERATES AN ALARM TO THE ESC SCADA SYSTEM NOTIFYING THE OPERATOR OF THE FLOW CONTROL FAULT.
SUPPLY DUCT FLOW CONTROL INTERLOCKS:	THE DUCT FLOW CONTROLS ARE INTERLOCKED WITHIN THE ECS PLCS, SO THAT THE THE PURGE AIR FLOW IS ONLY CONTROLLED WHEN THE OPERATOR ENABLES CONTROL OF THE DUCT FROM THE ECS SCADA SYSTEM. IF THE OPERATOR DOES NOT ENABLE THE DUCT, THE MAIN FLOW CONTROL VALVE FOR THAT DUCT IS COMMANDED TO FULL CLOSED EFFECTIVELY ISOLATING THE DUCT FROM THE PURGE AIR SUPPLY. DURING HAZOPS A MANUAL VALVE ON EACH DUCT NOT RECIEVING GN2 WILL NEED TO BE CLOSED TO PROVIDE DOUBLE ISOLATION BETWEEN PURGE AIR AND GN2 SUPPLIES.
SUPPLY DUCT HEATER CONTROL OPERATION:	FOR EACH OF THE 12 DUCTS THERE IS A HEATING CHAMBER WITH TWO REDUNDANT ELECTRIC HEATERS. THESE HEATERS ARE USED TO CONTROL THE TEMPERATURE OF THE DUCT AIR/GN2 SUPPLY. EACH OF THE HEATERS IS CONTROLLED BY MODULATING THE CURRENT THROUGH THE HEATER USING AN SCR. WHEN THE DUCT TEMPERATURE CONTROL IS ENABLED, FROM THE ECS SCADA, THE ECS PLC SYSTEM TURNS ON THE POWER TO THE HEATER SCR BY SETTING THE HEATER DIGITAL OUTPUT SIGNAL FROM THE ECS CONTROL PLCS. ONCE THE POWER TO THE SCR IS TURNED ON THE ECS PLC SYSTEM STARTS CONTROLLING CURRENT TO THE HEATER BY SENDING A 4 - 20MA ANALOG SIGNAL TO THE SCR CONTROLLER. WHEN THE OPERATOR DISABLES THE TEMPERATURE CONTROL THE PLC SENDS A MINIMUM POWER SETPOINT TO THE SCR CONTROLLER AND THEN IT TURNS OFF POWER TO THE HEATER SCR BY RESETING THE HEATER DIGITAL OUTPUT SIGNAL.
SUPPLY DUCT TEMPERATURE CONTROL OPERATION:	THE SUPPLY DUCT PURGE AIR TEMPERATURE CONTROL IS PERFORMED WITHIN THE ECS CONTROL PLCS FOR EACH OF THE 12 DUCTS. REDUNDANT TEMPERATURE MEASUREMENTS, DOWNSTREAM OF THE PURGE DUCT HEATER BANKS, ARE USED AS THE FEEDBACK TO THE TEMPERATURE CONTROL ALGORITHM WHICH CONTROLS THE PURGE AIR OUTLET TEMPERATURE. THE DUCT PURGE AIR TEMPERATURE SETPOINT IS ADJUSTABLE BY THE OPERATOR FROM THE ECS SCADA SYSTEM. CONTROL OF THE DUCT PURGE AIR TEMPERATURE IS ACHIEVED USING A REDUNDANT SET OF SCR CONTROLLED HEATERS LOCATED UPSTREAM OF THE DUCT FLOW CONTROL VALVE. WHILE THE DUCT TEMPERATURE CONTROL INTERLOCKS ARE NOT SATISFIED, THE SCR HEATER AND CONTROLS ARE COMMANDED OFF. WHEN ALL OF THE INTERLOCKS HAVE BEEN SATISFIED, THE HEATER SCR CONTROLLERS ARE MODULATED, USING S 4-20 MA SIGNAL, TO CONTROL THE DUCT PURGE AIR TEMEPERATURE TO AN OPERATOR ENTERED SETPOINT +/- 0.5 DEGF DEADBAND (ADJUSTABLE IN CODE). THE TEMPERATURE CONTROL ALGORITHM FUNCTIONS FOR EACH COOLING CHAMBER AS FOLLOWS: WHEN THE OUTLET PURGE AIR TEMPERATURE RISES ABOVE THE CONTROL TEMPERATURE SETPOINT PLUS +/-0.5 DEGF DEADBAND(CONFIGURABLE IN CODE), THE ECS CONTROL PLC MODULATES THE CONTROL SIGNAL TO THE HEATER SCR TO PROVIDE LESS HEATING UNTIL THE DUCT AIR TEMPERATURE IS WITHIN THE SETPOINT TEMPERATURE +/- 0.5 DEGF DEADBAND(CONFIGURABLE IN CODE). WHEN THE DUCT AIR TEMPERATURE FALLS BELOW THE CONTROL TEMPERATURE SETPOINT MINUS 0.5 DEGF DEADBAND(CONFIGURABLE IN CODE), THE ECS CONTROL PLC MODULATES THE CONTROL SIGNAL TO THE HEATER SCR TO PROVIDE MORE HEATING UNTIL THE DUCT TEMPERATURE IS WITHIN THE SETPOINT TEMPERATURE +/- 0.5 DEGF DEADBAND (CONFIGURABLE IN CODE). WHILE THE DUCT TEMPERATURE REMAINS WITHIN THE SETPOINT TEMPERATURE +/- 0.5 DEGF DEADBAND, THE ECS CONTROL PLC MAINTAINS THE CONTROL SIGNAL TO THE SCR UNTIL THE FEEDBACK TEMPERATURE MOVES OUTSIDE THE DEADBAND OF THE SETPOINT. IF THE CONTROL SIGNAL TO THE HEATER SCR REACHES THE MAXIMUM OR MINIMUM LEVEL AND THE DUCT AIR TEMPERATURE IS STILL OUTSIDE OF THE SETPOINT +/- THE DEADBAND, THE ECS CONTROL PLC GENERATES AN ALARM TO THE ESC SCADA SYSTEM NOTIFYING THE OPERATOR OF THE DUCT TEMPERATURE CONTROL FAULT. IF THE PRIMARY HEATER COIL FAULTS. THE PLC AUTOMATICALLY INITIATES OPERATION OF THE SECONDARY HEATER COIL.
SUPPLY DUCT TEMPERATURE CONTROL INTERLOCKS:	THE SUPPLY DUCT TEMPERATURE CONTROL IS INTERLOCKED, WITHIN THE ECS CONTROL PLCS, SO THAT THE DUCT TEMPERATURE IS ONLY CONTROLLED WHEN THE OPERATOR ENABLES TEMPERATURE CONTROL FROM THE ECS SCADA SYSTEM, THERE IS PURGE AIR OR GN2 FLOW, AND THE DUCT HEATER POWER IS ON AND THE HEATER SCR'S ARE ENABLED. IF ANY OF THESE INTERLOCKS ARE NOT SATISFIED THE TEMPERATURE CONTROL SYSTEM IS DISABLED AND THE DUCT HEATERS ARE TURNED OFF.
SUPPLY DUCT BOILER START/STOP OPERATION:	THERE ARE TWO ECS ELECTRIC BOILER SYSTEMS (NORTH AND SOUTH) WHICH SUPPLY STEAM TO THE DUCT HUMIDITY CONTROL VALVES. BOTH BOILERS CAN BE REMOTELY STARTED AND STOPPED, FROM THE ECS CONTROL PLCS OR, LOCALLY STARTED AND STOPPED FROM THE BOILER CONTROL PANELS. DURING NORMAL OPERATION BOTH BOILER SYSTEMS ARE SET IN REMOTE AND CAN BE CONTROLLED BY THE ECS CONTROL SYSTEM PLCS. AN AUTO/MANUAL SWITCH, FOR EACH OF THE BOILERS ARE LOCATED ON THE BOILER SYSTEM CONTROL PANEL. THESE SWITCHES ALLOW EACH OF THE TWO BOILERS TO BE PLACED IN THE REMOTE(AUTO) OR LOCAL(MANUAL) MODE. FOR REMOTE CONTROL OF THE BOILERS, THE SWITCH FOR EACH ONE OF THE BOILERS IS PLACED IN REMOTE. WITH BOTH OF THE BOILERS IN REMOTE, THE ON/OFF STATE OF THE BOILERS IS CONTROLLED, BY THE ECS CONTROL SYSTEM, USING DIGITAL OUTPUT SIGNALS TO EACH OF THE BOILER CONTROL PANELS.

SUPPLY DUCT HUMIDITY CONTROL OPERATION:	THE DUCT HUMIDITY CONTROL IS PERFORMED WITHIN THE ECS CONTROL PLCS. REDUNDANT HUMIDITY MEASUREMENTS, DOWNSTREAM OF THE STEAM INJECTION MANIFOLD, ARE USED AS THE FEEDBACK FOR THE HUMIDITY CONTROL ALGORITHM. THE PURGE AIR HUMIDITY SETPOINT IS ADJUSTABLE BY THE OPERATOR FROM THE ECS SCADA SYSTEM. DUCT HUMIDITY IS CONTROLLED USING TWO FLOW CONTROL AND ISOLOATION VALVE PAIRS. THESE VALVE PAIRS ARE PLUMBED IN PARALLEL TO PROVIDE MECHANICAL REDUNDANCY FOR THE HUMIDITY CONTROL SYSTEM. IN NORMAL OPERATION, WHEN THE HUMIDITY SYSTEM IS ENABLED BY THE OPERATOR, ONLY ONE OF THE TWO ISOLATION VALVES IS OPENED. THE ECS CONTROL PLCS THEN MODULATE THE FLOW CONTROL VALVE BASED UPON THE OPERATOR ENTERED HUMIDITY SETPOINT AND THE PURGE AIR HUMIDITY FEEDBACK. THE HUMIDITY CONTROL ALGORITHM FUNCTIONS FOR THE HUMIDITY EQUIPPED PURGE AIR SUPPLY DUCTS AS FOLLOWS: WHEN THE OUTLET PURGE AIR HUMIDITY RISES ABOVE THE HUMIDITY SETPOINT PLUS +/-2.5 %RH DEADBAND(CONFIGURABLE IN CODE), THE ECS CONTROL PLC MODULATES THE HUMIDITY CONTROL VALVE CLOSED UNTIL THE OUTLET PURGE AIR HUMIDITY IS WITHIN THE HUMIDITY SETPOINT +/- 2.5 %RH DEADBAND (CONFIGURABLE IN CODE). WHEN THE OUTLET PURGE AIR HUMIDITY FALLS BELOW THE CONTROL HUMIDITY SETPOINT MINUS 2.5 %RH DEADBAND (CONFIGURABLE IN CODE), THE ECS CONTROL PLC MODULATES THE HUMIDITY FLOW CONTROL VALVE OPENED UNTIL THE OUTLET HUMIDITY IS WITHIN THE HUMIDITY SETPOINT +/- 2.5 %RH DEADBAND (CONFIGURABLE IN CODE). WHILE THE HUMIDITY REMAINS WITHIN THE HUMIDITY SETPOINT +/- 2.5 %RH DEADBAND, THE ECS CONTROL PLC MAINTAINS THE CURRENT HUMIDITY FLOW CONTROL VALVE POSITION UNTIL THE HUMIDITY FEEDBACK MOVES OUTSIDE THE DEADBAND OF THE SETPOINT. IF THE HUMIDITY FLOW CONTROL VALVE REACHES FULL OPEN OR FULL CLOSED AND THE OUTLET PURGE AIR HUMIDITY IS STILL OUTSIDE OF THE SETPOINT +/- THE DEADBAND, THE ECS CONTROL PLC GENERATES AN ALARM TO THE ESC SCADA SYSTEM NOTIFYING THE OPERATOR OF THE HUMIDITY CONTROL FAULT.
SUPPLY DUCT HUMIDITY REDUNDANT OPERATION:	REDUNDANT OPERATION OF THE HUMIDITY CONTROL SYSTEM IS AS FOLLOWS: WHILE THE HUMIDITY SYSTEM IS ENABLED ONLY ONE OF THE HUMIDITY ISOLATION VALVES SHALL BE OPENED. HOWEVER BOTH FLOW CONTROL VALVES SHALL BE MODULATED AT THE SAME TIME AND USING THE SAME SETPOINT. ALTHOUGH ONLY THE PRIMARY FLOW CONTROL VALVES IS ACTUALLY CONTROLLING THE STEAM FLOW INTO THE PURGE AIR DUCT, IF A FALURE OCCURS IN THE PRIMARY FLOW CONTROL VALVE THE PRIMARY ISOLATION VALVE SHALL CLOSE, ISOALTING THE FAULTED FLOW CONTROL VALVE, AND THE REDUNDANT ISOLATION VALVE SHALL OPEN. SINCE BOTH FLOW CONTORL VALVES ARE MODULATED AT THE SAME TIME THIS WILL RESULT IN A BUMPLESS TRANSFER OF HUMIDITY CONTROL FROM THE PRIMARY FLOW CONTROL VALVE TO THE REDUNDANT FLOW CONTROL VALVE.
SUPPLY DUCT HUMIDITY CONTROL INTERLOCKS:	THE SUPPLY DUCT HUMIDITY CONTROL IS INTERLOCKED, WITHIN THE ECS CONTROL PLCS, SO THAT HUMIDITY CONTROL IS ONLY ENABLED WHEN THE OPERATOR ENABLES HUMIDITY CONTROL FROM THE ECS SCADA SYSTEM, THERE IS PURGE AIR OR GN2 FLOW, AND THE ECS BOILERS 1 OR 2 ARE RUNNING. WHILE THE HUMIDITY CONTROL INTERLOCKS ARE NOT SATISFIED THE HUMIDITY FLOW CONTROL VALVES ARE COMMANDED TO MAINTAIN THEIR CURRENT POSITION AND THE ISOLATION VALVES ARE CLOSED. WHEN ALL OF THE INTERLOCKS HAVE BEEN SATISFIED, THE HUMIDITY FLOW CONTROL VALVE MODULATES TO CONTROL THE PURGE AIR HUMIDITY TO THE SETPOINT ENTERED BY THE OPERATOR +/- 2.5 %RH DEADBAND (ADJUSTABLE IN CODE).
ECS PLC FAILURE:	IF ONE OF THE PLCS FAILS DURING OPERATION OF THE SUPPLY DUCTS, THE NON FAULTED PLC SHALL ASSUME CONTROL OF THE SUPPLY DUCTS CONTROL EQUIPMENT. THE NON-FAULTED PLC SHALL MAINTAIN TEMPERATURE, FLOW, AND HUMIDITY CONTROL OF THE PURGE AIR SUPPLY AT THE SAME PROCESS SETPOINTS THAT IT WAS AT BEFORE THE PLC FAILURE. WHEN A FAILURE OCCURS, THE ECS CONTROL SYSTEM NOTIFIES THE OPERATOR OF ALL ALARMS, WARNINGS, AND FAULTS BY DISPLAYING THEM ON THE ECS CONTROL ROOM SCADA SYSTEM. THE FLOW VALVE CONTROL AND FEEDBACK CONNECTIONS, FOR EACH DUCT, ARE WIRED TO BOTH ECS PLCS. DURING A PLC FAULT THE REDUNDANT PLC CONTROL CONNECTIONS SHALL CONTROL THE PURGE AIR FLOW. ON A HARDWARE FAULT, OF THE FLOW CONTROL VALVE, THE VALVE WILL FAIL IN PLACE SO THAT CURRENT FLOW THROUGH THE DUCT REMAINS UNINTERUPTED.
ECS SUPPLY DUCT CONTROL AND FEEDBACK:	THE SUPPLY DUCT FLOW, TEMPERATURE, AND HUMIDITY CONTROL IS OPERATED FROM THE ECS CONTROL ROOM USING THE ECS SCADA SYSTEM. THE ECS CONTROL PLC MONITORS ALL OF THE 12 SUPPLY DUCT CONTROLS, STATUSES AND PROCESS FEEDBACKS. THE 12 SUPPLY DUCTS ARE SEPARATED BY PLENUM, INTO THREE GROUPS AND DISPLAYED ON THREE DEDICATED SCADA SCREENS. THE THREE GROUPS ARE THE NORTH PLENUM, THE SOUTH PLENUM, AND THE ICPS PLENUM.

SYM	ZONE	DESCRIPTION	DATE	APPROVED
REVISIONS				

JACOBS
Jacobs Technology Inc.

SIGNATURES		DATE
DRAWN	M. HENNIGH	3/07/14
CHECKED	J. WHITEFORD	3/07/14
SUBMITTED	S. RITTER	3/07/14
ST OF LICENSURE: TN LICENSE NO: 00110556		
APPROVED	G. WARD	3/07/14
	S. HUNT	3/07/14

NATIONAL AERONAUTICS AND SPACE ADMINISTRATION
JOHN F. KENNEDY SPACE CENTER, NASA
KENNEDY SPACE CENTER, FLORIDA

KSC LAUNCH PAD 39-B
ENVIRONMENTAL CONTROL SYSTEM (ECS) REFURBISHMENT
INSTRUMENTATION
SEQUENCE OF OPERATIONS
SHEET 3

FILE NO.	SIZE	DWG.NO.	REV
	F	79K39602	
PCN. NO. 98898		SHEET 187 OF 187	

I-104