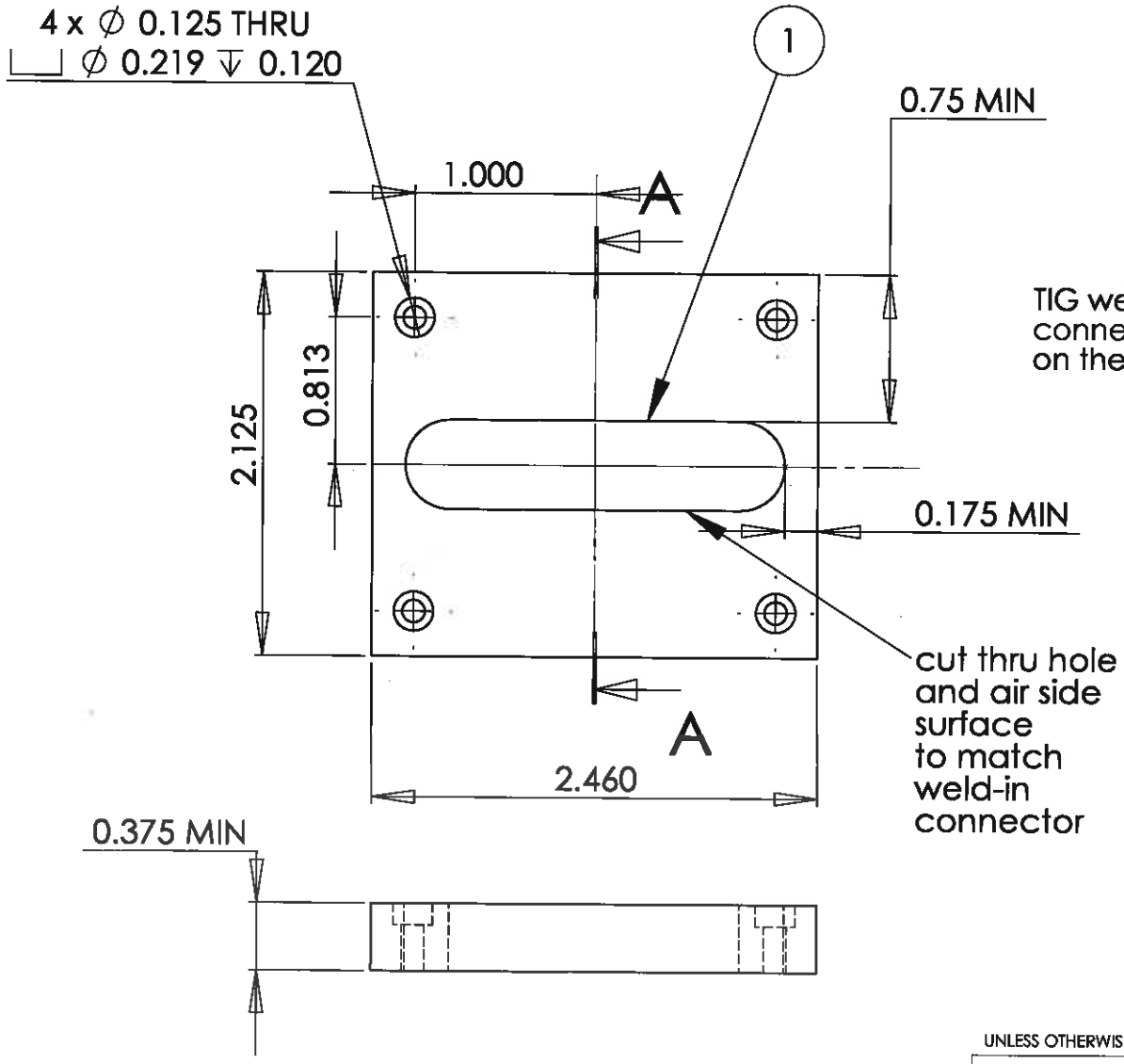

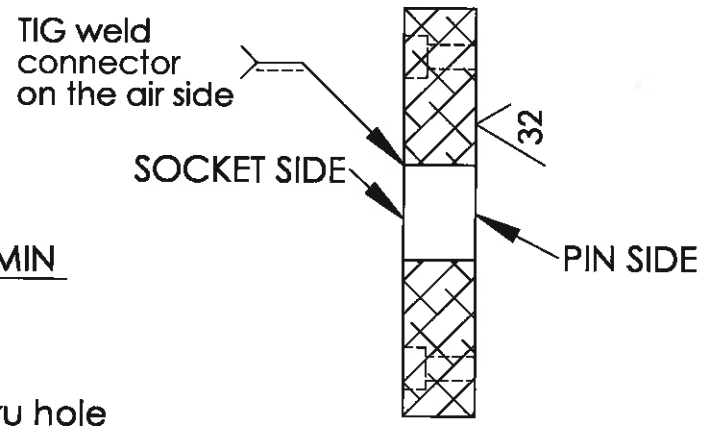

SECTION A-A

1. Weld in 100 pin Micro-D Hermetic Feedthru Connector MIL-DTL-8313/2.
Weldment must pass a vacuum leak test at 10^-9 mbar L/s

UNLESS OTHERWISE SPECIFIED:

DIMENSIONS ARE IN INCHES
TOLERANCES:
ANGULAR: MACH ± 0.05° BEND ± 0.1°
TWO PLACE DECIMAL ± 0.010
THREE PLACE DECIMAL ± 0.005

NASA-- PIPER PROJECT

MDM_plate_onesie
Stainless 304 or 316
Weld connector MDM100

SCALE: 1:1