Revitalize Building 4755

Mechanical Systems

MARSHALL SPACE FLIGHT CENTER, ALABAMA

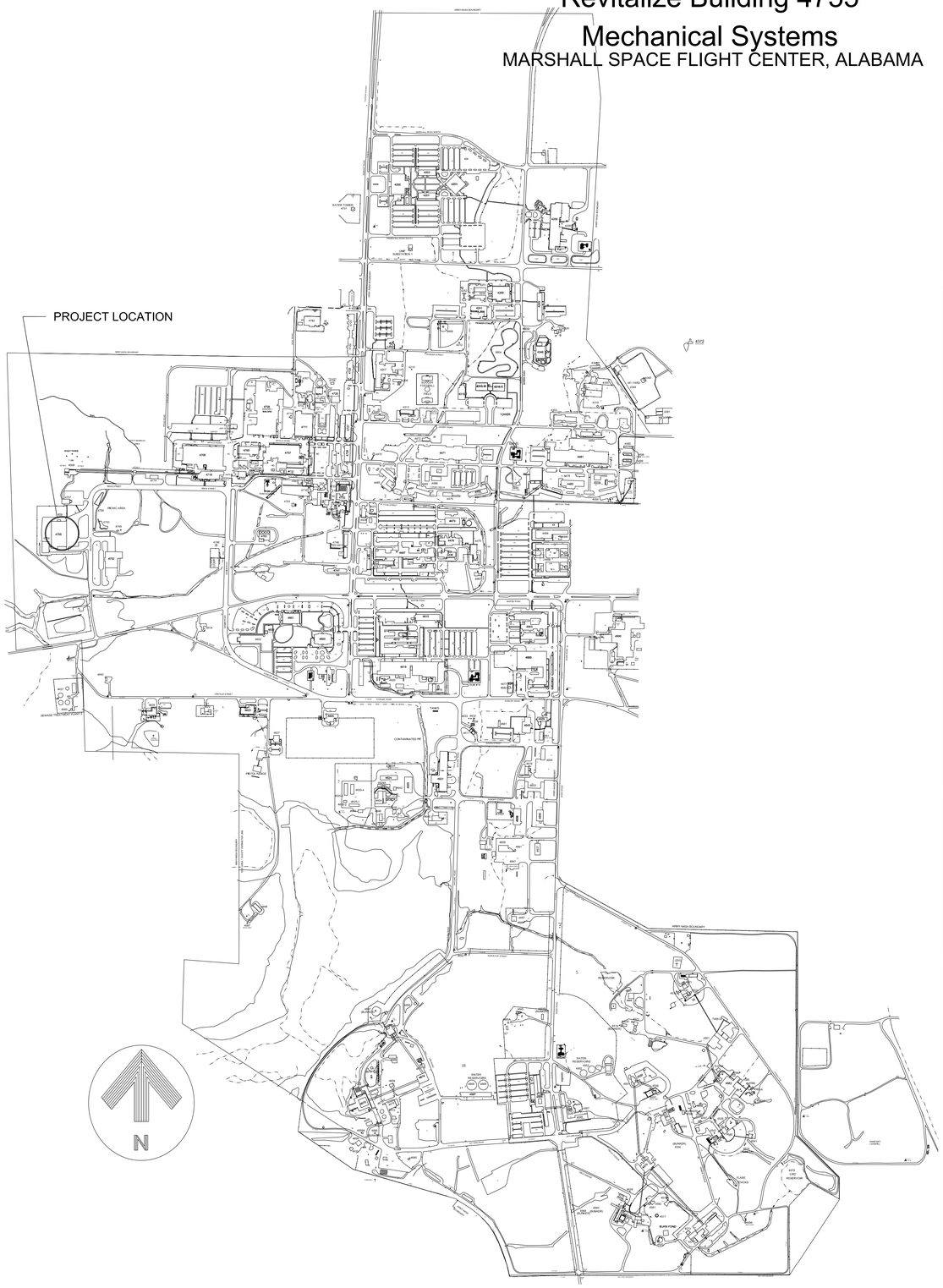

VICINITY MAP
NO SCALE

INDEX OF DRAWINGS

GENERAL			
REF. NO.	SHEET TITLE	DRAWING NO.	REV.
G001	INDEX OF DRAWINGS	FAC-DA-4755- G001	

ARCHITECTURAL			
REF. NO.	SHEET TITLE	DRAWING NO.	REV.
A001	GENERAL NOTES	FAC-DA-4755- A001	
A501	REFLECTED CEILING PLAN - FIRST FLOOR	FAC-DA-4755- A501	
A502	REFLECTED CEILING PLAN - SECOND FLOOR	FAC-DA-4755- A502	
A503	REFLECTED CEILING PLAN - THIRD FLOOR	FAC-DA-4755- A503	
A504	REFLECTED CEILING PLAN - FOURTH FLOOR	FAC-DA-4755- A504	
A601	RESTROOM PLAN ENLARGEMENTS	FAC-DA-4755- A601	
A602	RESTROOM PLAN ENLARGEMENTS - ALTERNATE #3	FAC-DA-4755- A602	

MECHANICAL			
REF. NO.	SHEET TITLE	DRAWING NO.	REV.
M001	MECHANICAL GEN NOTES, ABBREVIATIONS, & LEGEND	FAC-DA-4755- M001	
M002	DEMOLITION PHOTOGRAPHS SERIES 1	FAC-DA-4755- M002	
M003	DEMOLITION PHOTOGRAPHS SERIES 2	FAC-DA-4755- M003	
M004	DEMOLITION PHOTOGRAPHS SERIES 3	FAC-DA-4755- M004	
M005	DEMOLITION PHOTOGRAPHS SERIES 4	FAC-DA-4755- M005	
M100	HVAC BASEMENT DEMOLITION PLAN	FAC-DA-4755- M100	
M101	HVAC FIRST FLOOR DEMOLITION PLAN - AREA "A"	FAC-DA-4755- M101	
M102	HVAC FIRST FLOOR DEMOLITION PLAN - AREA "B"	FAC-DA-4755- M102	
M103	HVAC FIRST FLOOR DEMOLITION PLAN - AREA "C"	FAC-DA-4755- M103	
M104	HVAC SECOND FLOOR DEMOLITION PLAN - AREA "B"	FAC-DA-4755- M104	
M105	HVAC THIRD FLOOR DEMOLITION PLAN - AREA "B"	FAC-DA-4755- M105	
M106	HVAC FOURTH FLOOR DEMOLITION PLAN - AREA "B"	FAC-DA-4755- M106	
M200	HVAC BASEMENT NEW WORK DUCTWORK PLAN	FAC-DA-4755- M200	
M201	HVAC FIRST FLOOR NEW WORK DUCTORK PLAN - AREA "A"	FAC-DA-4755- M201	
M202	HVAC FIRST FLOOR NEW WORK DUCTWORK PLAN - AREA "B"	FAC-DA-4755- M202	
M203	HVAC FIRST FLOOR NEW WORK DUCTWORK PLAN - AREA "C"	FAC-DA-4755- M203	
M204	HVAC SECOND FLOOR NEW WORK DUCTWORK PLAN - AREA "B"	FAC-DA-4755- M204	
M205	HVAC THIRD FLOOR NEW WORK DUCTWORK PLAN - AREA "B"	FAC-DA-4755- M205	
M206	HVAC FOURTH FLOOR NEW WORK DUCTWORK PLAN - AREA "B"	FAC-DA-4755- M206	
M300	HVAC BASEMENT NEW WORK PIPING PLAN	FAC-DA-4755- M300	
M301	HVAC FIRST FLOOR NEW WORK PIPING PLAN - AREA "A"	FAC-DA-4755- M301	
M302	HVAC FIRST FLOOR NEW WORK PIPING PLAN - AREA "B"	FAC-DA-4755- M302	
M303	HVAC FIRST FLOOR NEW WORK PIPING PLAN - AREA "C"	FAC-DA-4755- M303	
M304	HVAC SECOND FLOOR NEW WORK PIPING PLAN - AREA "B"	FAC-DA-4755- M304	
M305	HVAC THIRD FLOOR NEW WORK PIPING PLAN - AREA "B"	FAC-DA-4755- M305	
M306	HVAC FOURTH FLOOR NEW WORK PIPING PLAN - AREA "B"	FAC-DA-4755- M306	
M401	HVAC ENLARGED FIRST FLOOR MECHANICAL PLAN	FAC-DA-4755- M401	
M501	HVAC DETAILS	FAC-DA-4755- M501	
M502	HVAC DETAILS	FAC-DA-4755- M502	
M601	MECHANICAL EQUIPMENT SCHEDULES	FAC-DA-4755- M601	
M602	MECHANICAL EQUIPMENT SCHEDULES	FAC-DA-4755- M602	
M701	MECHANICAL CONTROLS SEQUENCES	FAC-DA-4755- M701	
M702	MECHANICAL CONTROLS SEQUENCES	FAC-DA-4755- M702	
M703	MECHANICAL CONTROLS SEQUENCES	FAC-DA-4755- M703	
M704	MECHANICAL CONTROLS CHILLED WATER SCHEMATIC	FAC-DA-4755- M704	
M705	MECHANICAL CONTROLS HEATING HOT WATER SCHEMATIC	FAC-DA-4755- M705	
M706	MECHANICAL CONTROLS SEQUENCES	FAC-DA-4755- M706	

PLUMBING			
REF. NO.	SHEET TITLE	DRAWING NO.	REV.
P001	PLUMBING GEN NOTES, ABBREVIATIONS, LEGEND & SCHEDULES	FAC-DA-4755- P001	
P101	PLUMBING - FIRST FLOOR DEMOLITION PLAN - AREA"B"	FAC-DA-4755- P101	
P102	PLUMBING - ADDITIONAL FLOORS DEMOLITION PLANS	FAC-DA-4755- P102	
P201	PLUMBING - FIRST FLOOR NEW WORK PLAN - AREA "B"	FAC-DA-4755- P201	
P202	PLUMBING - ADDITIONAL FLOORS NEW WORK PLANS	FAC-DA-4755- P202	
P301	PLUMBING - DETAILS	FAC-DA-4755- P301	
P401	PLUMBING - RISER DIAGRAMS	FAC-DA-4755- P401	
P402	PLUMBING - RISER DIAGRAMS	FAC-DA-4755- P402	

ADDITIVE ALTERNATES

ADD ALTERNATIVE #1 - REPLACE EXISTING CHILLED WATER AND HEATING HOT WATER PIPING WITH ALL NEW PIPING. EXCEPT NEWLY INSTALLED HEATING HOT WATER RUNOUTS TO HIGH BAY AIR HANDLERS. IF ADD ALTERNATE #1 IS NOT SELECTED, ONLY PIPING BRANCHES TO DEMOLISHED EQUIPMENT SHALL BE DEMOLISHED. SEE MECHANICAL DRAWINGS FOR THIS ALTERNATE.

ADD ALTERNATE #2 - REPLACE ALL WATER CLOSETS, URINALS, AND SELECTED LAVATORIES AS SHOWN, WITH NEW FIXTURES AND REPLACE ALL LAVATORY FAUCETS. REMOVE ALL DOMESTIC HOT WATER HEATERS AND REPLACE WITH A SINGLE UNIT LOCATED ON THE 4TH FLOOR. REMOVE ALL HOT WATER PIPING AND REPLACE WITH NEW PIPING. ADD A HOT WATER RE-CIRCULATION PUMP AND ASSOCIATED HOT WATER RE-CIRCULATION PIPING. SEE DRAWING A601 AND PLUMBING DRAWINGS FOR THIS ALTERNATE.

ADD ALTERNATIVE #3 - REPLACE EXISTING SANITARY AND POTABLE WATER SYSTEMS OCCURRING ABOVE THE FIRST FINISHED FLOOR SLAB AT LOCATIONS SHOWN ON DRAWINGS. IF ADD ALTERNATE #3 IS SELECTED, DEMOLISH UNUSED SANITARY AND POTABLE WATER SUPPLY LINES. SEE PLUMBING DRAWINGS FOR THIS ALTERNATE.

ADD ALTERNATE #4 - REMOVE LIGHT FIXTURES SHOWN ON ARCHITECTURAL DRAWINGS A501 THROUGH A504 IN AREAS TO RECEIVE NEW CEILING GRID AND ACOUSTICAL TILE. FURNISH AND INSTALL NEW LIGHT FIXTURES SHOWN AND SCHEDULED ON DRAWINGS E406 & E407. USE EXISTING LIGHTING CIRCUITS AND LIGHTING CONTROLS FOR THIS ALTERNATE. COORDINATE INSTALLATION OF LIGHTING FIXTURES WITH THE MECHANICAL CONTRACTOR.

ATTENTION!

ALL CONTRACTORS AND SUBCONTRACTORS PREPARING BIDS FOR THIS PROJECT

USING A 'COMPARABLE, EQUAL' OR 'SUBSTITUTION' PRODUCT, IN THE PLACE OF A 'BASIS OF DESIGN' PRODUCT, MAY REQUIRE CHANGES TO THE MECHANICAL, ELECTRICAL, STRUCTURAL OR ARCHITECTURAL BUILDING SYSTEMS IN ORDER TO ACCOMODATE THE PRODUCT. THE CONTRACTOR IS RESPONSIBLE FOR ALL COSTS OF MAKING CHANGES TO THE BUILDING SYSTEMS. SUBMIT IN ACCORDANCE WITH SPEC SECTION 01 60 00 PRODUCT REQUIREMENT.

ELECTRICAL			
REF. NO.	SHEET TITLE	DRAWING NO.	REV.
E001	GENERAL NOTES & LEGENDS	FAC-DA-4755- E001	
E101	DEMO ELECTRICAL PLAN - 1ST FLOOR AREA A	FAC-DA-4755- E101	
E102	DEMO ELECTRICAL PLAN - 1ST FLOOR AREA C	FAC-DA-4755- E102	
E103	DEMO ELECTRICAL PLAN - 4TH FLOOR AREA B	FAC-DA-4755- E103	
E201	ELECTRICAL PLAN - BASEMENT	FAC-DA-4755- E201	
E202	ELECTRICAL PLAN - 1ST FLOOR AREA A	FAC-DA-4755- E202	
E203	ELECTRICAL PLAN - 1ST FLOOR AREA B	FAC-DA-4755- E203	
E204	ELECTRICAL PLAN - 1ST FLOOR AREA C	FAC-DA-4755- E204	
E205	ELECTRICAL PLAN - 2ND FLOOR AREA B	FAC-DA-4755- E205	
E206	ELECTRICAL PLAN - 3RD FLOOR AREA B	FAC-DA-4755- E206	
E207	ELECTRICAL PLAN - 4TH FLOOR AREA B	FAC-DA-4755- E207	
E301	SCHEDULES	FAC-DA-4755- E301	
E401	ONE LINE DIAGRAM - SUBSTATION #2	FAC-DA-4755- E401	
E402	ONE LINE DIAGRAM - SUBSTATION #2 NEW WORK	FAC-DA-4755- E402	
E403	ONE LINE DIAGRAM - SUBSTATION #3	FAC-DA-4755- E403	
E404	ONE LINE DIAGRAM - SUBSTATION #3 NEW WORK	FAC-DA-4755- E404	
E405	SUBSTATION ELEVATIONS	FAC-DA-4755- E405	
E406	LIGHTING PLAN - 1ST & 2ND FLOOR AREA B ADD ALT #4	FAC-DA-4755- E406	
E407	LIGHTING PLAN - 3RD & 4TH FLOOR AREA B ADD ALT #4	FAC-DA-4755- E407	

UCS			
REF. NO.	SHEET TITLE	DRAWING NO.	REV.
UCS1	UCS GENERAL NOTES AND BLDG 4754 DEMO AND NEW PLAN	FAC-DA-4755- UCS1	
UCS2	FIRST FLOOR UCS DEMO PLAN - AREA "A"	FAC-DA-4755- UCS2	
UCS3	FIRST FLOOR UCS DEMO PLAN - AREA "B"	FAC-DA-4755- UCS3	
UCS4	FIRST FLOOR UCS DEMO PLAN - AREA "C"	FAC-DA-4755- UCS4	
UCS5	SECOND AND THIRD FLOOR UCS DEMO PLAN	FAC-DA-4755- UCS5	
UCS6	FOURTH FLOOR UCS DEMO PLAN	FAC-DA-4755- UCS6	
UCS7	BASEMENT AND ENLARGED ROOM 119/E-1 UCS DEMO PLAN	FAC-DA-4755- UCS7	
UCS8	FIRST FLOOR UCS NEW WORK PLAN - AREA "A"	FAC-DA-4755- UCS8	
UCS9	FIRST FLOOR UCS NEW WORK PLAN - AREA "B"	FAC-DA-4755- UCS9	
UCS10	FIRST FLOOR UCS NEW WORK PLAN - AREA "C"	FAC-DA-4755- UCS10	
UCS11	SECOND FLOOR UCS NEW WORK PLAN	FAC-DA-4755- UCS11	
UCS12	THIRD FLOOR UCS NEW WORK PLAN	FAC-DA-4755- UCS12	
UCS13	FOURTH FLOOR UCS NEW WORK PLAN	FAC-DA-4755- UCS13	
UCS14	BASEMENT AND ENLARGED ROOM 119/E-1 NEW UCS PLAN	FAC-DA-4755- UCS14	
UCS15	UCS FIDO1 DEMO SCHEDULE	FAC-DA-4755- UCS15	
UCS16	UCS DEMO WIRING DETAILS	FAC-DA-4755- UCS16	
UCS17	UCS DEMO WIRING DETAILS	FAC-DA-4755- UCS17	
UCS18	UCS DEMO WIRING DETAILS	FAC-DA-4755- UCS18	
UCS19	UCS DEMO WIRING DETAILS	FAC-DA-4755- UCS19	
UCS20	UCS COMM TRUNK DEMO	FAC-DA-4755- UCS20	
UCS21	UCS DEMO AND NEW NETWORK INFRASTRUCTURE	FAC-DA-4755- UCS21	
UCS22	NEW UCS COMM TRUNK LAYOUT	FAC-DA-4755- UCS22	
UCS23	NEW UCS COMM TRUNK LAYOUT	FAC-DA-4755- UCS23	
UCS24	UCS0001, CARDS 1-3 NEW WIRING DETAILS	FAC-DA-4755- UCS24	
UCS25	UCS0001, CARD 4 NEW WIRING DETAILS	FAC-DA-4755- UCS25	
UCS26	UCS0002, CARDS 1-3 NEW WIRING DETAILS	FAC-DA-4755- UCS26	
UCS27	UCS0002, CARD 4 NEW WIRING DETAILS	FAC-DA-4755- UCS27	
UCS28	UCS0003, CARDS 1-3 NEW WIRING DETAILS	FAC-DA-4755- UCS28	
UCS29	UCS0003, CARD 4 NEW WIRING DETAILS	FAC-DA-4755- UCS29	
UCS30	UCS0004, CARDS 1-3 NEW WIRING DETAILS	FAC-DA-4755- UCS30	
UCS31	UCS0004, CARD 4 NEW WIRING DETAILS	FAC-DA-4755- UCS31	
UCS32	UCS0005 AND 4754-UCS0001 NEW WIRING DETAILS	FAC-DA-4755- UCS32	
UCS33	UCS0006 AND UCS0007 NEW WIRING DETAILS	FAC-DA-4755- UCS33	
UCS34	UCS SK'S	FAC-DA-4755- UCS34	
UCS35	UCS SK'S	FAC-DA-4755- UCS35	
UCS36	UCS SK'S	FAC-DA-4755- UCS36	
UCS37	UCS SK'S	FAC-DA-4755- UCS37	
UCS38	UCS SK'S	FAC-DA-4755- UCS38	
UCS39	UCS SK'S	FAC-DA-4755- UCS39	
UCS40	UCS VAV CROSS REFERENCE TABLE	FAC-DA-4755- UCS40	

FINAL SUBMITTAL
FOR CONSTRUCTION

CONCURRENCE: DATE: 3/14
PLANNING AND BUSINESS MANAGEMENT GROUP
CONCURRENCE: DATE: 2/21/14
CONTRACT MANAGEMENT TEAM
CONCURRENCE: DATE: 11/19/13
OPERATIONS & MAINTENANCE GROUP
CONCURRENCE: DATE: 12/10/13
ENVIROMENTAL ENGINEERING DEPT.
CONCURRENCE: DATE: 3/10/14
USING OFFICE
CONCURRENCE: DATE: 2-18-14
ENVIRONMENTAL HEALTH
CONCURRENCE: DATE: 11/13/2013
SAFETY OFFICE
CONCURRENCE: DATE: 2/24/14
PROJECT CM
CONCURRENCE: DATE: 11/20/13
COMMUNICATIONS OFFICE

SIGNATURES ON INDEX SHEET INDICATE ACCEPTANCE OF THIS SHEET

REF. NO. G001 SHEET 1 OF 1

WARNING
DO NOT SCALE THIS DRAWING
THIS DRAWING WAS DESIGNED TO BE PRINTED AT A NASA SHEET SIZE: MSFC STD. SIZE 40" X 28"

PRELIMINARY CADD DWG.
CHANGES TO THIS DRAWING SHALL BE MADE ON CADD ONLY.
LATEST CADD UPDATE: 29 Oct 2013
BY:

REV.	BY	DATE	REVISION	C.I. NO.	APPROVED

Marshall Space Flight Center
Huntsville, Alabama 35812

REVITALIZE BUILDING
MECHANICAL SYSTEMS (4755)

INDEX OF DRAWINGS

AE FIRM: GOODWYN | MILLS | CAWOOD — MERRICK & COMPANY — JOINT VENTURE

NASA AE CONTRACT NO.
NASA NNM12AA49C
NNM12AA68T

SUBMITTED: JENNIFER LANDRY
AE: DATE: 09/17/13
DESIGNED L. ROBINSON
DRAWN L. ROBINSON
CHECKED L. ROBINSON
SCALE: N/A

APPROVAL RECOMMENDED: ANDY ROWLAND — AS22 PROJECT A/E
APPROVAL RECOMMENDED: ANDY ROWLAND — AS22 SUPPORT A/E
APPROVAL RECOMMENDED: NELSON OLINGER — AS22 TEAM LEAD
SPEC. NO. FAC M5057

APPROVED: JIMMY GUARIN — AS22 GROUPLEAD — DATE: 10/24/13

DRAWING NO.
FAC-DA-4755-G001

MSFC-FORM 232 REV. 8-21-89-RCL

ANNOTATION SYMBOLS:

Room name

ROOM REFERENCE SYMBOL:
-- Room Name
1--: Area number
-- 01: space number

COLUMN LINES

677.52
or
+677.52

DATUM SYMBOL (ELEVATION MARK)

677.52 - ELEVATION (FT)

NORTH ARROW

TOILET ACCESSORY TAG:

-TOILET ACCESSORY TYPE 1
SEE TOILET ACCESSORY SCHEDULE

PLAN KEYNOTE TAG

- NOTE NUMBER 1
SEE PLAN KEYNOTE SCHEDULE

DOOR SYMBOL:

-DOOR NUMBER 101
SEE DOOR SCHEDULE AND FLOOR PLANS

WINDOW SYMBOL:

-WINDOW TYPE A
SEE EXTERIOR ELEVATIONS AND WINDOW SCHEDULE

LOUVER SYMBOL:

-LOUVER TYPE L1
SEE LOUVER SCHEDULE

WALL SYMBOL:

-WALL TYPE 2A1
SEE PARTITION LEGEND
THIRD NUMBER/LETTER DESIGNATES OPTION TO BE INCLUDED

FFE

BUILDING SECTION SYMBOL:

SECTION 1 ON SHEET A101

WALL SECTION SYMBOL:

SECTION 1 ON SHEET A101

ENLARGED PLAN/DETAIL SYMBOL:

ENLARGED PLAN 1 ON SHEET A601
REFERENCED FROM PLAN A501

EXTERIOR ELEVATION SYMBOL:

ELEVATION 1 ON SHEET A101

INTERIOR ELEVATION SYMBOL:

INTERIOR ELEVATION 3 ON SHEETA101

REVISION SYMBOL

Used to indicate scope of current revision

EQUIPMENT AND DEVICE MOUNTING HEIGHTS FOR ADD ALTERNATE #3:

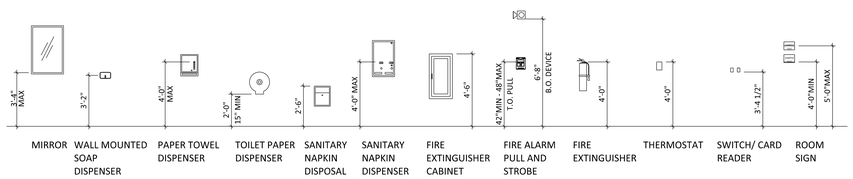

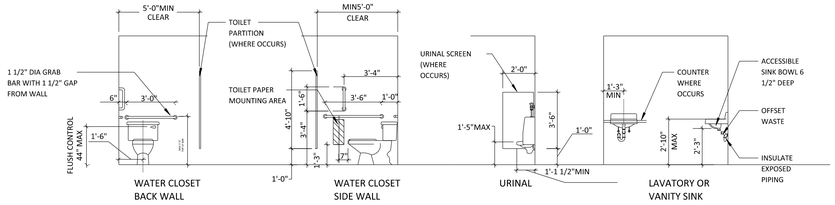

GENERAL NOTES

GENERAL:

1. COMPLETE CONTRACT DOCUMENTS: The drawings, specifications, addenda constitute the Construction Documents and shall remain in-tact. The General Contractor is fully responsible for compliance with the requirements hereof. Do not issue partial sets or otherwise cause incomplete information to be provided to parties to the contract or associated sub-contracts.

2. DRAWING SCALE: Modern reprographic techniques may render drawings differently than the intended printed scale. Therefore, do not rely upon the scale of drawings. Contact the COR for required dimensions that are not provided herein.

3. DIMENSIONAL STANDARD: Standard dimension conventions utilized herein call for dimensions to face of finish, or centerline of column line or other reference line, unless otherwise noted or indicated. Dimensions noted as "CLEAR" shall be strictly enforced.

4. CODE COMPLIANCE: Perform all work in strict accordance with applicable laws, codes, and ordinances.

5. DISCREPANCIES: The General Contractor shall promptly notify the COR of identified discrepancies.

6. CONSTRUCTION LOADS: The General Contractor shall not load new or existing construction beyond its design capacity with stored material, construction equipment, or similar items.

7. CONCEAL PIPING: Piping, ductwork, and electrical raceways/conduits shall be concealed in the building construction to the fullest extent possible. The General Contractor shall include, in the base bid, required furring to conceal all piping, mechanical ductwork, and/ or electrical raceways unless specifically indicated as exposed to view.

8. WOOD IN CONTACT WITH CONCRETE/ MASONRY: All wood in contact with concrete or masonry construction shall be Pressure Treated [PT].

9. GENERAL SEALANTS: Continuously seal perimeter of all door and window frames, millwork, trim, cabinets, and similar fixed construction. All control and expansion joints shall be continuously sealed, both sides of joint.

10. The General Contractor shall coordinate with COR for the location of a layout/storage area if required.

11. CoF project "Replace Asbestos Siding, FAC-CY-4755" will be in concurrent construction with this project. Contractor shall coordinate with COR as required to ensure project construction takes place and equipment is installed in proper sequence. Contractor shall coordinate with COR to avoid conflicts, delays and to provide a finished project at completion.

12. Asbestos Containing Materials (ACMs) have been identified in this building. Building materials identified as ACM, include 9" x 9" floor tile of various colors, HVAC duct insulation, pipe insulation, gray pipe mastic, white mastic and mud on ducts. The 9" x 9" floor tile is beyond the scope of this project and should not be disturbed. Before demolition of mechanical units, duct work and piping, all ACMs related to those items to be removed, shall be legally remediated. If during the course of the work material which may contain asbestos is discovered, stop work immediately and comply with EPA and NASA regulations to protect workers and occupants. Contact and coordinate with the COR.

GENERAL PHASING NOTES:

1. HIGH BAYS NORTH AND SOUTH: The High-Bay areas will remain occupied and operational throughout this construction project.

2. THIRD AND FOURTH FLOORS: These floors shall be the first floors to have the mechanical systems revitalized. During this phase, the first and second floors will remain operational and occupied.

3. FIRST AND SECOND FLOORS: During the revitalization of these floors the Third and Fourth floors will be occupied and fully operational.

4. ELEVATOR ACCESS: The General contractor shall maintain safe access to the elevator throughout construction.

5. The COR will determine the final phasing schedule after dicussions with the user.

GENERAL DEMOLITION NOTES:

1. Contractor shall field verify pertinent dimensions and notify COR of any conflicts with the scheduled new work prior to start of work to receive clarification.

2. Contractor to field verify all conditions herein and notify COR of any discrepancies or conflicts within documents prior to start of work.

3. The contractor shall verify existing conditions, construction, materials, methods of construction, elevations, etc. prior to construction. Notify COR of any concealed conditions effecting construction prior to start of work.

4. All work shall be coordinated with the work of other trades to avoid interferences and conflicts. Refer to the drawings of the respective systems prior to submission of bids for additional work which may be required as part of their work. No allowances will be made for the lack of coordination between disciplines or systems and equipment.

5. The contractor shall take extreme caution to fully investigate existing finishes, construction equipment, mechanical, electrical and plumbing systems prior to demolition to assure critical services are not interrupted.

6. It is the Contractor's responsibility to barricade off area of work and provide protected entrances and exits to and from the building.

7. Project plans have been developed from drawings previously prepared by others. Actual conditions may vary. Contractor shall verify dimensions and details related to existing construction and make minor adjustments as required. Contractor shall report any significant differences to the COR prior to start of work.

8. Demolition drawings illustrate the general scope of demolition work required and are not intended to be all-inclusive of demolition work required by the scope of new construction work, including that required of plumbing, mechanical, and electrical drawings and specifications. The General Contractor's demolition scope included in the bid for this project shall include the successful completion of the scope of new architectural and finish work, and demolition required for completion of the work required of plumbing, mechanical, electrical and fire protection disciplines.

9. Contractor to closely coordinate with COR during the replacement of laboratory exhaust and ventilation systems to insure that hazardous operations normally preformed under the hoods have ended and all hazardous materials have been removed from the hoods.

10. The government will reclaim the mechanical system refrigerant prior to removal of HVAC equipment and systems. Notify COR 30 days in advance of removal of HVAC systems.

GENERAL CEILING PLAN (RCP) NOTES:

1. CEILING HEIGHTS: The General Contractor, shall install new ceiling grid and tiles at the same heights as the removed ceiling. In no event shall the General Contractor modify the ceiling heights without prior written approval of the COR.

2. CONTROL JOINTS: All gypsum board ceilings shall be constructed with control joints in accordance with the drawings and specifications. Where not specifically indicated, control joints shall be installed, at a minimum, in accordance with the recommendations of the Gypsum Association of America Handbook, latest edition. Control joints shall be USG Control Joint # 093, or equal, unless specifically indicated otherwise. At fire rated floor/ ceiling assemblies, back-up control joints with additional layer of gypsum board to assure continuous fire rating.

3. EXPANSION JOINTS: All exposed to view ceiling expansion joints shall receive expansion joint cover finished to match adjacent ceiling surface.

4. EQUIPMENT ACCESS DOORS: The General contractor shall provide proposed location of ceiling access doors to the COR for approval. Access doors shall be painted to match adjacent finish.

ABBREVIATIONS

AB	anchor bolt
AC	acre
ACC	access
ACI	American Concrete Institute
ACT	acoustical ceiling tile
ADD	addendum
AFF	above finished floor
ALT	alternate
ALUM	aluminum
APPROX	approximate
ARCH	architect (ural)
B&B	balled and burlapped
B/B	back to back
BC	base of curb
BD	board
BLDG	building
BLK	block
BLKG	blocking
BM	beam
B.M.	benchmark
BOT	bottom
BRG	bearing
BRK	brick
BSMT	basement
BT	bent
BUR	built-up roof
BW	bottom of wall
CAB	cabinet
CAL	caliper
CB	catch basin
C/C	center to center
CD	core deck
CF	cubic foot
CHAN	channel
CI	cast iron
CIP	cast iron pipe
CJ	construction or control joint
CLG	ceiling
CLO	closet
CLR	clear (ance)
CLS	closure
CMP	corrugated metal pipe
CMU	concrete masonry unit
CO	clean out
COL	column
CONC	concrete
CONN	connection
CONST	construction
CONT	continuous or continue
CONTR	contract or contractor
CNTR	center
CPT	carpet (ed)
CRS	course (s)
CS	countersink
CSMU	ca
CT	ceramic tile
CY	cubic yard
D	dryer
DBL	double
DEM	demolish or demolition
DET	detail
DH	double hung
DIA	diameter
DIAG	diagonal
DIM	dimension
DIP	ductile iron pipe
DL	dead load
DR	door
DS	downspout
DWG	drawing
DF	drinking fountain
EA	each
EF	each face
EIFS	exterior insulation finish system
EJ	expansion joint
ELEV	elevation/elevator
ELEC	electric (al)
EMER	emergency
ENGR	engineer
EOP	edge of pavement
EOS	edge of slab
EPNT	epoxy paint
EQ	equal
EW	each way
EWC	electric water cooler
EXH	exhaust
EXIST	existing
EXP	expansion
EXT	exterior
FBO	furnished by others
Flr Drn	floor drain
FEC	fire extinguisher and cabinet
FFE	finished floor elevation
FFL	finished floorline
FHC	fire hose and cabinet
F/	face of
F/F	face to face
FIN	finish (ed)
FL	floor
FLG	flange
FND	foundation
F.O.	face of
FOB	face of brick
FOC	face of concrete
FOF	face of finish
FOM	face of masonry
FOS	face of stud
FL	floor
FR	frame (ed), (ing)
FRT	fire retardant treated
FT	foot/feet
FTG	footing
GL	glaze/glue
GA	gauge
GALV	galvanized
GB	grab bar
GI	galvanized iron
GA	gauge
GWB	gypsum wall board
GYP	gypsum
HC	hollow core
HDW	hardware
HK	hook
HM	hollow metal
HORIZ	horizontal
HP	high point/
'H'	pile beam
HT	height
HVAC	heating/ventilating/air conditioning
HK	hook
HWH	hot water heater
ID	inside diameter
IE	invert elevation
IFS	inside face of stud
IJ	isolation joint
IN	inch/inches
INSUL	insulation
JAN	janitor's closet
JG	joist girder
JST	joist
JT	joint

K	thousand
KIP	1000 #
KIT	kitchen
KJ	key joint
KSI	1000 # per sq in
LAM	laminate (d)
LF	linear foot
L	length
LAB	laboratory
LAV	lavatory
LH	left hand
LL	live load
LLH	long leg horizontal
LLV	long leg vertical
LP	low point
LT.GA	light gage
LT	light
MAS	masonry
MATL	material
MAX	maximum
MC	misc. channel
MCJ	masonry control joint
MECH	mechanical
MEZZ	mezzanine
MANUF	manufacture (er)
MH	manhole
MIN	minimum
MIR	mirror
MO	masonry opening
MT	mounted (ed), (ing)
MTL	metal
MULL	mullion
NIC	not in contract
NO	number
NOM	nominal
NT'D	noted
NTS	not to scale
OC	on center (s)
OD	outside diameter
OFS	outside face of stud
OH	overhead
OPG	opening
OPH	opposite hand
OPP	opposite
PAR	parallel
P.C.	point of curvature
PL	property line, plate
PLAM	plastic laminate
PM	premolded
PNL	panel
PNT	paint (ed)
PSF	pounds per square foot
PSI	pounds per square inch
PT	point/pressure treated/ point of tangency
PV	pave (d), (ing)
PVC	polyvinyl chloride
PVMT	pavement
PWD	plywood
QT	quarry tile
R	riser
RA	return air
RAD	radius
RB	rubber base
RCP	reinforced concrete pipe
RD	roof drain
REBAR	reinforcement bar
REF	refrigerator/ reference
REINF	reinforce (d), (ing)
REQ'D	required
RET	retaining
REV	revision (s), revised
RFG	roofing
RH	right hand
RM	room
R.M.	reinforced masonry
RO	rough opening
ROW	right of way
RTU	roof top unit
RVS	reversed (side)
SC	solid core
SCH	schedule
SD	storm drain
SECT	section
SH	shelf, shelving
SIM	similar
SPEC	specification (s)
SQ	square
SS	sanitary sewer
SST	stainless steel
ST	split tee
STL	steel
STD	standard
STOR	storage
STRUCT	structural
SV	sheet vinyl/soffit vent
SY	square yard
STL	steel
T	tread
T/	top of
TC	terra cotta, top of curb
TELE	telephone
T&G	tongue and groove
THK	thick (ness)
TOS	top of slab
TS	tubular steel
T/FTG	top of footing
T/J	top of joist
T/S	top of steel
TW	top of wall
TYP	typical
TZ	terrazzo
UR	urinal
UNO	unless noted otherwise
VAR	varnish
VB	vinyl base
VCT	vinyl composition tile
VERT	vertical VIN vinyl
VJ	v-joint (ed)
VWC	vinyl wall covering
VIN	vinyl
W	washer/width/wide flange
WB	wood base
WC	water closet
WD	wood
WH	wall hung
WIN	window
W.P.	work point
WSCT	wainscot
WT	weight
WTW	wall to wall
WWF	welded wire fabric
W/	with
W/O	without

ALL WORK SHOWN ON THIS SHEET IS BASE BID OR ALT #3 AS NOTED.

WARNING
DO NOT SCALE THIS DRAWING
THIS DRAWING WAS DESIGNED TO BE PRINTED AT A NASA SHEET SIZE: MSFC STD. SIZE 40" X 28"

REV.	BY	DATE	REVISION	C.I. NO.	APPROVED

Marshall Space Flight Center
Huntsville, Alabama 35812

REVITALIZE BUILDING
MECHANICAL SYSTEMS (4755)

GENERAL NOTES

FINAL SUBMITTAL
ISSUED FOR CONSTRUCTION

SIGNATURES ON INDEX SHEET INDICATE ACCEPTANCE OF THIS SHEET

REF. NO. A001 SHEET 1 OF 7

AE FIRM: GOODWYN | MILLS | CAWOOD — MERRICK & COMPANY — JOINT VENTURE

NASA AE CONTRACT NO.
NASA- NNM12AA49C
NNM12AA68T

SUBMITTED: JENNIFER LANDRY
APPROVAL RECOMMENDED: ANDY ROWLAND, AS22 PROJECT A/E
APPROVED: JIMMY GUARIN

AE: DATE: 11/04/13
APPROVAL RECOMMENDED: ANDY ROWLAND, AS22 SUPPORT A/E
AS22 GROUP LEAD DATE:

DESIGNED L. ROBINSON
DRAWN L. ROBINSON
CHECKED L. ROBINSON
APPROVAL RECOMMENDED: NELSON OLINGER, AS22 TEAM LEAD

SCALE: N/A
SPEC. NO. FAC M5057

DRAWING NO.
FAC-DA-4755-A001

MSFC-FORM 232 REV. 8-21-89-RCL

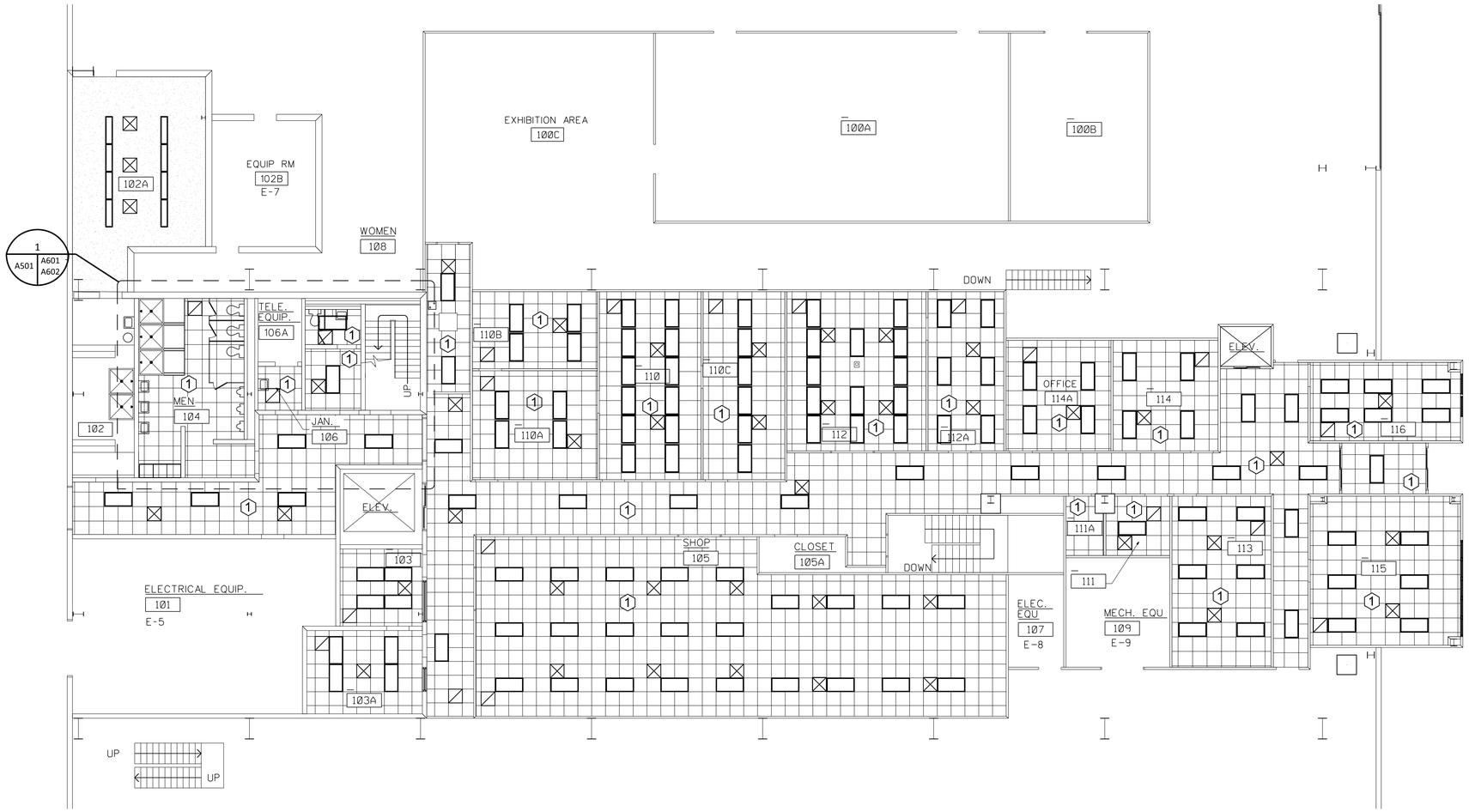

NORTH

FIRST FLOOR REFLECTED CEILING PLAN

1/8"= 1'-0"

REFLECTED CEILING PLAN

GENERAL CEILING NOTES

1. INTERIOR CEILING HEIGHTS TO MATCH EXISTING CEILING HEIGHTS.
2. LOCATION OF LIGHTS, DIFFUSERS, AND RETURN AIR GRILLES TO BE COORDINATED BETWEEN REFLECTED CEILING PLANS, LIGHTING PLANS, AND HVAC PLANS AND FINAL LOCATION TO BE APPROVED BY COR.
3. ALL BULKHEADS TO BE 2" BELOW ADJACENT ACT CEILING UNLESS NOTED OTHERWISE
4. REINSTALL EXISTING LIGHT FIXTURES IN SAME LOCATIONS AFTER NEW CEILING GRID HAS BEEN INSTALLED FOR BASE BID, ALT #1, ALT #2 AND ALT #3. IF ALT #4 IS TAKEN, REMOVE EXISTING LIGHT FIXTURES AND INSTALL NEW LIGHT FIXTURES AS SHOWN ON ELECTRICAL DRAWINGS E406 AND E407.
5. SUPPORT LIGHT FIXTURES AT EACH CORNER INDEPENDENT OF GRID.
6. SEE DRAWING A001 FOR GENERAL NOTES.
7. SEE SPECIFICATIONS FOR ADDITIONAL CEILING FINISH INFORMATION AND REQUIREMENTS. NOTIFY ARCHITECT WITH ANY DISCREPANCIES BETWEEN SPECIFICATION AND DRAWINGS.

KEYNOTE

(1) REMOVE AND REPLACE CEILING GRID AND TILES IN THIS AREA. NEW CEILING GRID AND TILE TO BE 2' X 2'.

REFLECTED CEILING PLAN LEGEND

CEILING FINSIHES:
- 2'X2' LAY-IN ACOUSTICAL CEILING & GRID SYSTEM
- EXISTING - NO WORK
- GYPSUM BOARD CEILING

LIGHTING:
- 2X4 LIGHT FIXTURE

MECHANICAL:
- SUPPLY DIFFUSER
- RETURN AIR GRILL

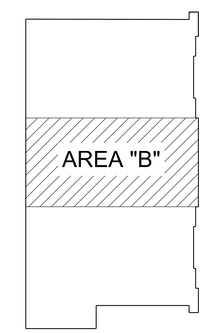

BUILDING 4755
KEY PLAN
NOT TO SCALE

ALL WORK SHOWN ON THIS SHEET IS BASE BID.

WARNING
DO NOT SCALE THIS DRAWING
THIS DRAWING WAS DESIGNED TO BE PRINTED AT A NASA SHEET SIZE: MSFC STD. SIZE 40" X 28"

REV.	BY	DATE	REVISION	C.I. NO.	APPROVED

Marshall Space Flight Center
Huntsville, Alabama 35812

REVITALIZE BUILDING
MECHANICAL SYSTEMS (4755)

Reflected Ceiling Plan - First Floor Area "B"

FINAL SUBMITTAL
ISSUED FOR CONSTRUCTION

SIGNATURES ON INDEX SHEET INDICATE ACCEPTANCE OF THIS SHEET

REF. NO. A501 SHEET 2 OF 7

AE FIRM: GOODWYN | MILLS | CAWOOD — MERRICK & COMPANY — JOINT VENTURE

NASA AE CONTRACT NO. NNM12AA49C NNM12AA68T

SUBMITTED: JENNIFER LANDRY
APPROVAL RECOMMENDED: ANDY ROWLAND, AS22 PROJECT A/E
APPROVED: JIMMY GUARIN, AS22 GROUP LEAD, DATE:
AE: DATE: 11/04/13
DESIGNED L. ROBINSON
DRAWN L. ROBINSON
CHECKED L. ROBINSON
APPROVAL RECOMMENDED: ANDY ROWLAND, AS22 SUPPORT A/E
APPROVAL RECOMMENDED: NELSON OLINGER, AS22 TEAM LEAD
SCALE: 1/8"=1'-0"
SPEC. NO. M5057
DRAWING NO. FAC-DA-4755-A501

MSFC-FORM 232 REV. 8-21-89-RCL

MSFC Master Bid Disk 03-26-2014

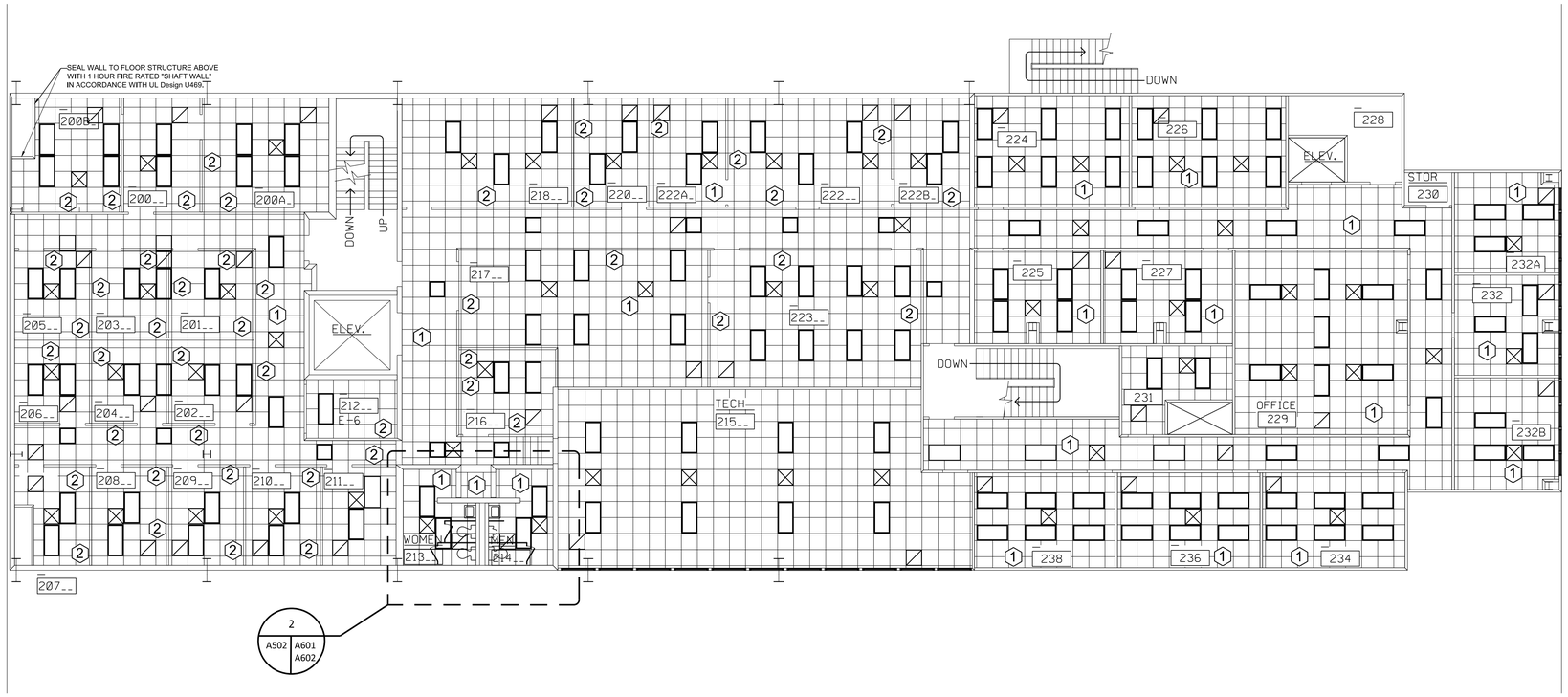

SECOND FLOOR REFLECTED CEILING PLAN

1/8"= 1'-0"

NORTH

REFLECTED CEILING PLAN

GENERAL CEILING NOTES

1. INTERIOR CEILING HEIGHTS TO MATCH EXISTING CEILING HEIGHTS.
2. LOCATION OF LIGHTS, DIFFUSERS, AND RETURN AIR GRILLES TO BE COORDINATED BETWEEN REFLECTED CEILING PLANS, LIGHTING PLANS, AND HVAC PLANS AND FINAL LOCATION TO BE APPROVED BY COR.
3. ALL BULKHEADS TO BE 2" BELOW ADJACENT ACT CEILING UNLESS NOTED OTHERWISE
4. REINSTALL EXISTING LIGHT FIXTURES IN SAME LOCATIONS AFTER NEW CEILING GRID HAS BEEN INSTALLED FOR BASE BID, ALT #1, ALT #2 AND ALT#3. IF ALT #4 IS TAKEN, REMOVE EXISTING LIGHT FIXTURES AND INSTALL NEW LIGHT FIXTURES AS SHOWN ON ELECTRICAL DRAWINGS E406 AND E407.
5. SUPPORT LIGHT FIXTURES AT EACH CORNER INDEPENDENT OF GRID.
6. SEE DRAWING A001 FOR GENERAL NOTES.
7. SEE SPECIFICATIONS FOR ADDITIONAL CEILING FINISH INFORMATION AND REQUIREMENTS. NOTIFY ARCHITECT WITH ANY DISCREPANCIES BETWEEN SPECIFICATION AND DRAWINGS.

KEYNOTES

1. REMOVE AND REPLACE CEILING GRID AND TILES IN THIS AREA. NEW CEILING GRID AND TILE TO BE 2' X 2'.
2. BRACE WALL TO DECK ABOVE BEFORE REMOVING GRID.

REFLECTED CEILING PLAN LEGEND

CEILING FINSIHES:
- 2'X2' LAY-IN ACOUSTICAL CEILING & GRID SYSTEM
- EXISTING - NO WORK
- GYPSUM BOARD CEILING

LIGHTING:
- 2X4 LIGHT FIXTURE

MECHANICAL:
- SUPPLY DIFFUSER
- RETURN AIR GRILL

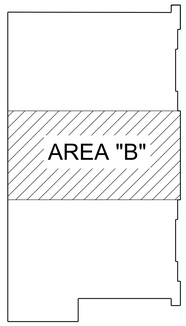

BUILDING 4755
KEY PLAN
NOT TO SCALE

WARNING
DO NOT SCALE THIS DRAWING
THIS DRAWING WAS DESIGNED TO BE PRINTED AT A NASA SHEET SIZE: MSFC STD. SIZE 40" X 28"

REV.	BY	DATE	REVISION	C.I. NO.	APPROVED

Marshall Space Flight Center
Huntsville, Alabama 35812

REVITALIZE BUILDING
MECHANICAL SYSTEMS (4755)

Reflected Ceiling Plan -Second Floor Area "B"

FINAL SUBMITTAL
ISSUED FOR CONSTRUCTION

SIGNATURES ON INDEX SHEET INDICATE ACCEPTANCE OF THIS SHEET

REF. NO. A502 SHEET 3 OF 7

AE FIRM: GOODWYN | MILLS | CAWOOD — MERRICK & COMPANY — JOINT VENTURE

NASA AE CONTRACT NO. NNM12AA49C NNM12AA68T

SUBMITTED: JENNIFER LANDRY
APPROVAL RECOMMENDED: ANDY ROWLAND, AS22 PROJECT A/E
APPROVED: JIMMY GUARIN
AE: DATE: 11/04/13
APPROVAL RECOMMENDED: ANDY ROWLAND, AS22 SUPPORT A/E
AS22 GROUP LEAD DATE:
DESIGNED L. ROBINSON
DRAWN L. ROBINSON
CHECKED L. ROBINSON
APPROVAL RECOMMENDED: NELSON OLINGER, AS22 TEAM LEAD
SCALE: 1/8"=1'-0"
SPEC. NO. M5057

DRAWING NO.
FAC-DA-4755-A502

ALL WORK SHOWN ON THIS SHEET IS BASE BID.

MSFC-FORM 232 REV. 8-21-89-RCL

MSFC Master Bid Disk 03-26-2014

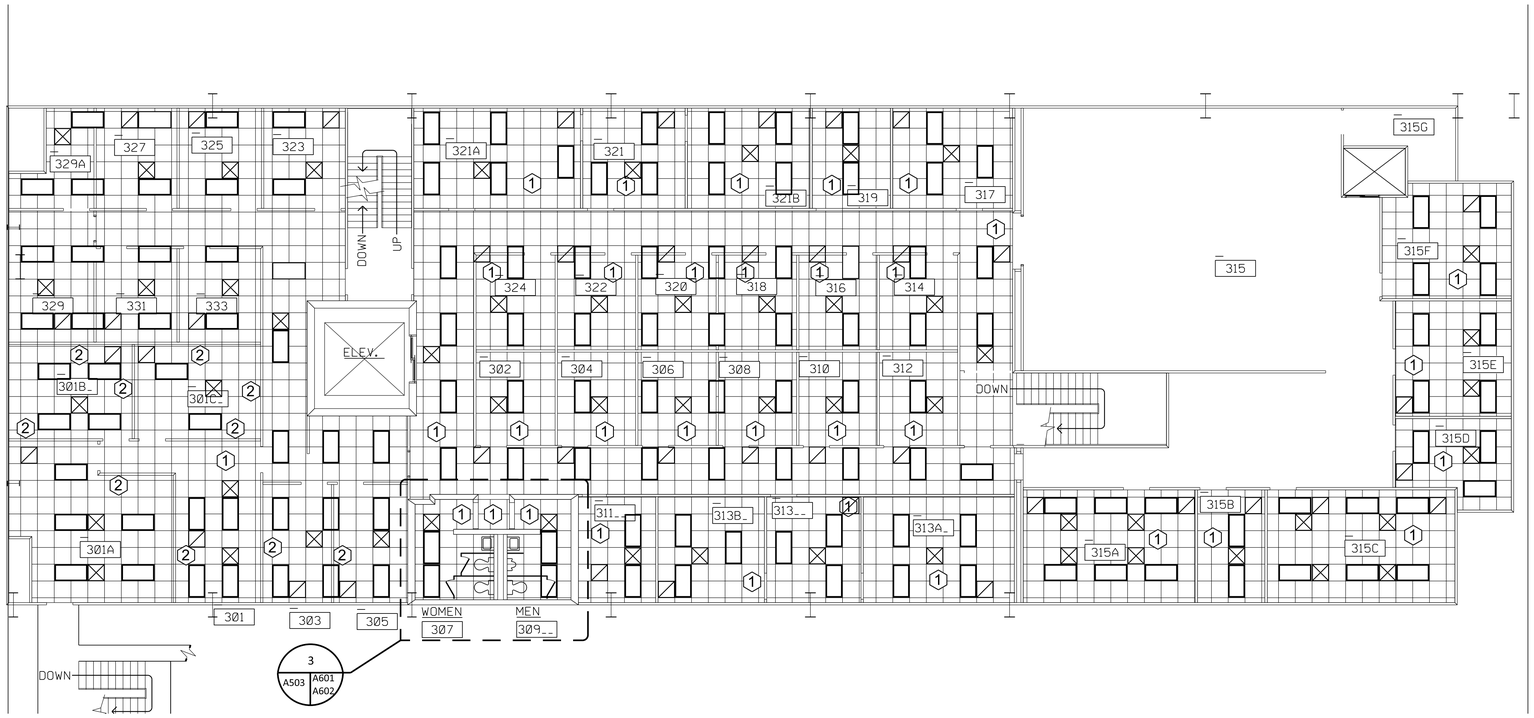

THIRD FLOOR REFLECTED CEILING PLAN

NORTH

1/8"= 1'-0"

REFLECTED CEILING PLAN

GENERAL CEILING NOTES

1. INTERIOR CEILING HEIGHTS TO MATCH EXISTING CEILING HEIGHTS.
2. LOCATION OF LIGHTS, DIFFUSERS, AND RETURN AIR GRILLES TO BE COORDINATED BETWEEN REFLECTED CEILING PLANS, LIGHTING PLANS, AND HVAC PLANS AND FINAL LOCATION TO BE APPROVED BY COR.
3. ALL BULKHEADS TO BE 2" BELOW ADJACENT ACT CEILING UNLESS NOTED OTHERWISE
4. REINSTALL EXISTING LIGHT FIXTURES IN SAME LOCATIONS AFTER NEW CEILING GRID HAS BEEN INSTALLED FOR BASE BID, ALT #1, ALT #2 AND ALT #3. IF ALT #4 IS TAKEN, REMOVE EXISTING LIGHT FIXTURES AND INSTALL NEW LIGHT FIXTURES AS SHOWN ON ELECTRICAL DRAWINGS E406 AND E407.
5. SUPPORT LIGHT FIXTURES AT EACH CORNER INDEPENDENT OF GRID.
6. SEE DRAWING A001 FOR GENERAL NOTES.
7. SEE SPECIFICATIONS FOR ADDITIONAL CEILING FINISH INFORMATION AND REQUIREMENTS. NOTIFY ARCHITECT WITH ANY DISCREPANCIES BETWEEN SPECIFICATION AND DRAWINGS.

KEYNOTES

1. REMOVE AND REPLACE CEILING GRID AND TILES IN THIS AREA. NEW CEILING GRID AND TILE TO BE 2' X 2'.
2. BRACE WALL TO DECK ABOVE BEFORE REMOVING GRID.

REFLECTED CEILING PLAN LEGEND

CEILING FINSIHES:

- 2'X2' LAY-IN ACOUSTICAL CEILING & GRID SYSTEM
- EXISTING - NO WORK
- GYPSUM BOARD CEILING

LIGHTING:

- 2X4 LIGHT FIXTURE

MECHANICAL:

- SUPPLY DIFFUSER
- RETURN AIR GRILL

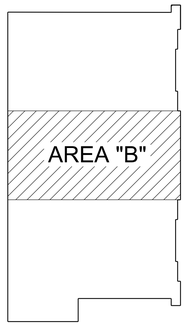

BUILDING 4755 KEY PLAN

NOT TO SCALE

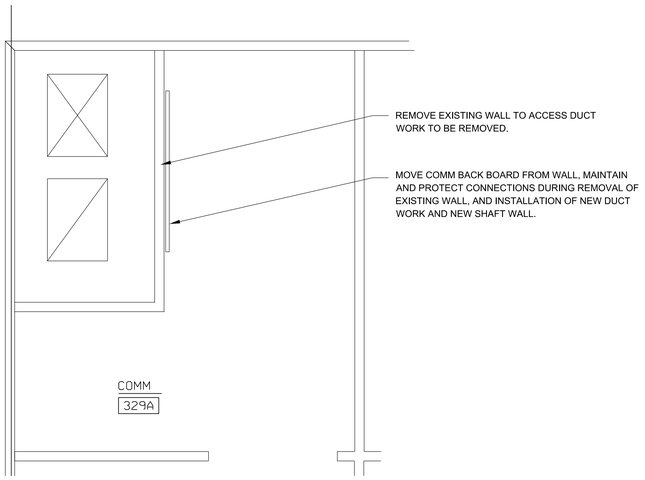

ENLARGED DEMO PLAN AT DUCT CHASE

NORTH

1/2"= 1'-0"

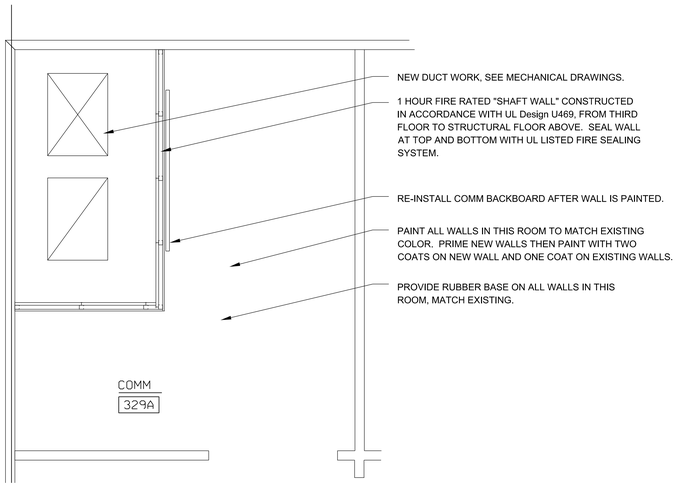

ENLARGED PLAN AT DUCT CHASE

NORTH

1/2"= 1'-0"

ALL WORK SHOWN ON THIS SHEET IS BASE BID.

WARNING

DO NOT SCALE THIS DRAWING

THIS DRAWING WAS DESIGNED TO BE PRINTED AT A NASA SHEET SIZE: MSFC STD. SIZE 40" X 28"

REV.	BY	DATE	REVISION	C.I. NO.	APPROVED

Marshall Space Flight Center
Huntsville, Alabama 35812

REVITALIZE BUILDING
MECHANICAL SYSTEMS (4755)

Reflected Ceiling Plan - Third Floor Area "B"

FINAL SUBMITTAL

ISSUED FOR CONSTRUCTION

SIGNATURES ON INDEX SHEET INDICATE ACCEPTANCE OF THIS SHEET

REF. NO. A503 SHEET 4 OF 7

AE FIRM: GOODWYN | MILLS | CAWOOD — MERRICK & COMPANY — JOINT VENTURE

NASA AE CONTRACT NO. NNM12AA49C NNM12AA68T

SUBMITTED: JENNIFER LANDRY	APPROVAL RECOMMENDED: ANDY ROWLAND, AS22 PROJECT A/E	APPROVED: JIMMY GUARIN	
AE: DATE: 11/04/13	APPROVAL RECOMMENDED: ANDY ROWLAND, AS22 SUPPORT A/E	AS22 GROUP LEAD	DATE:
DESIGNED L. ROBINSON		DRAWING NO.	
DRAWN L. ROBINSON	APPROVAL RECOMMENDED: NELSON OLINGER, AS22 TEAM LEAD	FAC-DA-4755-A503	
CHECKED L. ROBINSON			
SCALE: 1/8"=1'-0"	SPEC. NO. M5057		

MSFC-FORM 232 REV. 8-21-89-RCL

MSFC Master Bid Disk 03-26-2014

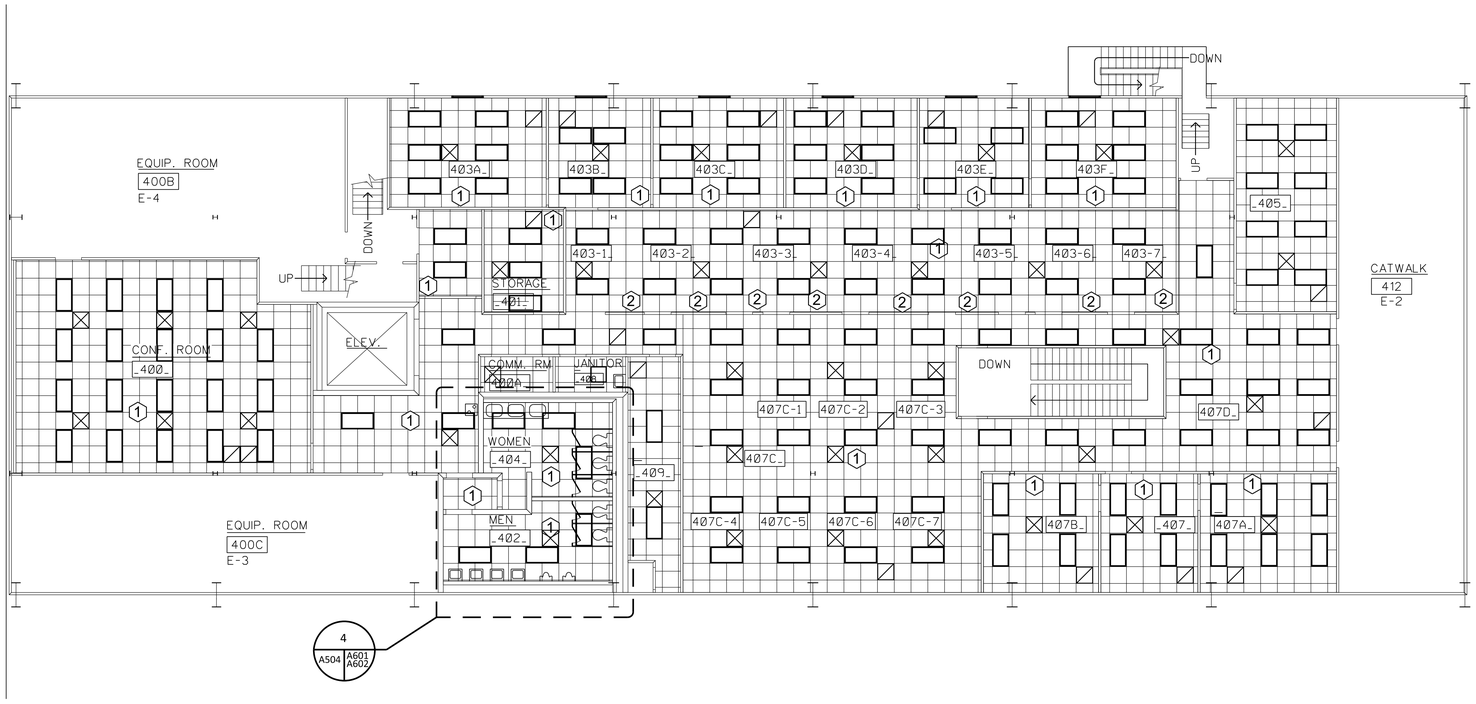

NORTH

FOURTH FLOOR REFLECTED CEILING PLAN

1/8"= 1'-0"

REFLECTED CEILING PLAN

GENERAL CEILING NOTES

1. INTERIOR CEILING HEIGHTS TO MATCH EXISTING CEILING HEIGHTS.
2. LOCATION OF LIGHTS, DIFFUSERS, AND RETURN AIR GRILLES TO BE COORDINATED BETWEEN REFLECTED CEILING PLANS, LIGHTING PLANS, AND HVAC PLANS AND FINAL LOCATION TO BE APPROVED BY COR.
3. ALL BULKHEADS TO BE 2" BELOW ADJACENT ACT CEILING UNLESS NOTED OTHERWISE
4. REINSTALL EXISTING LIGHT FIXTURES IN SAME LOCATIONS AFTER NEW CEILING GRID HAS BEEN INSTALLED FOR BASE BID, ALT #1, ALT #2 AND ALT #3. IF ALT #4 IS TAKEN, REMOVE EXISTING LIGHT FIXTURES AND INSTALL NEW LIGHT FIXTURES AS SHOWN ON ELECTRICAL DRAWINGS E406 AND E407.
5. SUPPORT LIGHT FIXTURES AT EACH CORNER INDEPENDENT OF GRID.
6. SEE DRAWING A001 FOR GENERAL NOTES.
7. SEE SPECIFICATIONS FOR ADDITIONAL CEILING FINISH INFORMATION AND REQUIREMENTS. NOTIFY ARCHITECT WITH ANY DISCREPANCIES BETWEEN SPECIFICATION AND DRAWINGS.

KEYNOTES

1. REMOVE AND REPLACE CEILING GRID AND TILES IN THIS AREA. NEW CEILING GRID AND TILE TO BE 2' X 2'.
2. BRACE WALL TO DECK ABOVE BEFORE REMOVING GRID.

REFLECTED CEILING PLAN LEGEND

CEILING FINSIHES:
- 2'X2' LAY-IN ACOUSTICAL CEILING & GRID SYSTEM
- EXISTING - NO WORK
- GYPSUM BOARD CEILING

LIGHTING:
- 2X4 LIGHT FIXTURE

MECHANICAL:
- SUPPLY DIFFUSER
- RETURN AIR GRILL

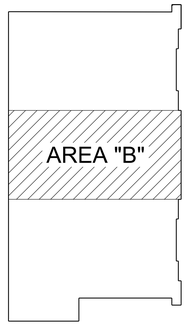

BUILDING 4755
KEY PLAN
NOT TO SCALE

WARNING
DO NOT SCALE THIS DRAWING
THIS DRAWING WAS DESIGNED TO BE PRINTED AT A NASA SHEET SIZE: MSFC STD. SIZE 40" X 28"

REV	BY	DATE	REVISION	C.I. NO.	APPROVED

Marshall Space Flight Center
Huntsville, Alabama 35812

REVITALIZE BUILDING
MECHANICAL SYSTEMS (4755)

Reflected Ceiling Plan - Fourth Floor Area "B"

FINAL SUBMITTAL
ISSUED FOR CONSTRUCTION

SIGNATURES ON INDEX SHEET INDICATE ACCEPTANCE OF THIS SHEET

REF. NO. A504 SHEET 5 OF 7

AE FIRM: GOODWYN | MILLS | CAWOOD — MERRICK & COMPANY — JOINT VENTURE

NASA AE CONTRACT NO. NNM12AA49C NNM12AA68T

SUBMITTED: JENNIFER LANDRY
AE: DATE: 11/04/13
DESIGNED L. ROBINSON
DRAWN L. ROBINSON
CHECKED L. ROBINSON
SCALE: 1/8"=1'-0"

APPROVAL RECOMMENDED: ANDY ROWLAND, AS22 PROJECT A/E
APPROVAL RECOMMENDED: ANDY ROWLAND, AS22 SUPPORT A/E
APPROVAL RECOMMENDED: NELSON OLINGER, AS22 TEAM LEAD
SPEC. NO. M5057

APPROVED: JIMMY GUARIN, AS22 GROUP LEAD DATE:

DRAWING NO. FAC-DA-4755-A504

ALL WORK SHOWN ON THIS SHEET IS BASE BID.

MSFC-FORM 232 REV. 8-21-89-RCL

MSFC Master Bid Disk 03-26-2014

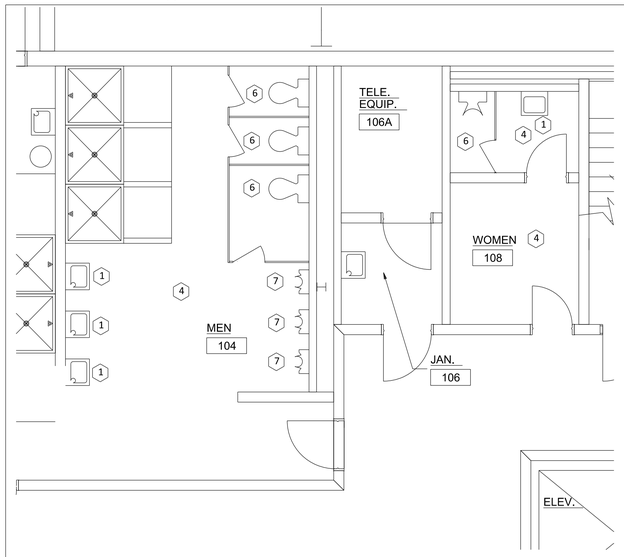

NORTH 1 A501 A601 FIRST FLOOR RESTROOM PLANS
1/4"= 1'-0"

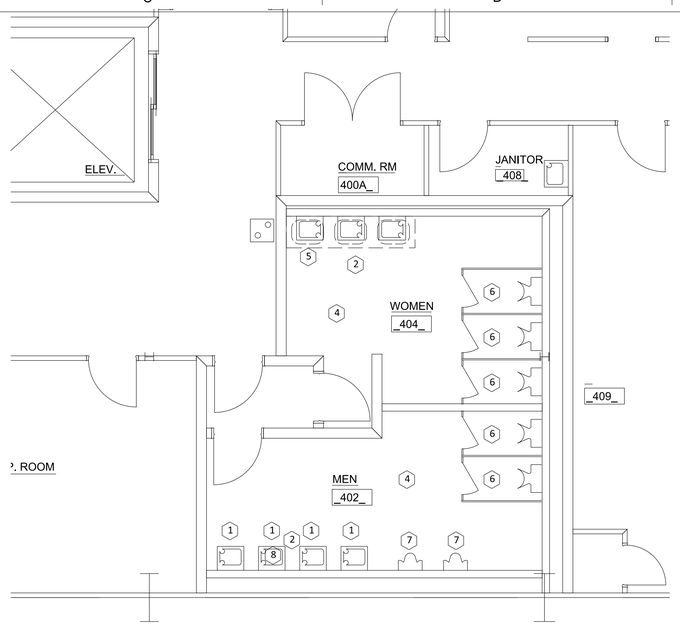

NORTH 4 A504 A601 FOURTH FLOOR RESTROOM PLANS
1/4"= 1'-0"

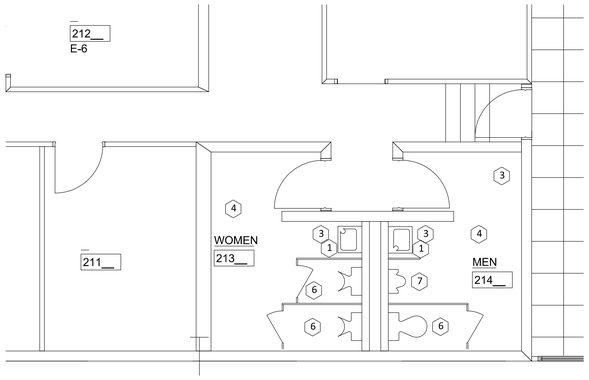

NORTH 2 A502 A601 SECOND FLOOR RESTROOM PLANS
1/4"= 1'-0"

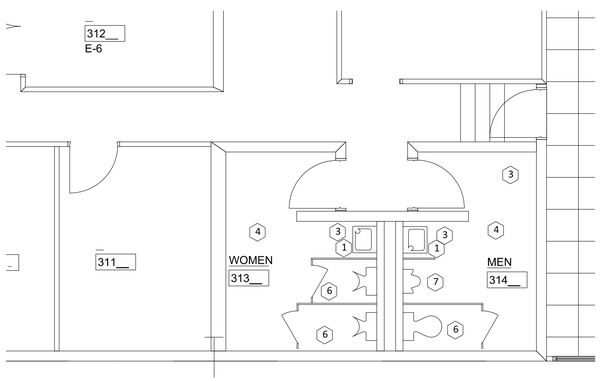

NORTH 3 A503 A601 THIRD FLOOR RESTROOM PLANS
1/4"= 1'-0"

PLAN KEY NOTES (ADDITIVE ALTERNATE #2)

1. REMOVE AND REPLACE LAVATORY FAUCET AND COVER EXTRANEOUS HOLES.
2. REPAIR WALL TILE DAMAGED DURING REPLACEMENT OF LAVATORIES.
3. REPAIR DAMAGED GYPSUM BOARD AND PAINT WALLS.
4. PAINT GYPSUM BOARD WALLS.
5. REMOVE SINKS, VANITY, & COUNTER AND INSTALL THREE WALL HUNG LAVATORIES.
6. REMOVE AND REPLACE WATERCLOSETS.
7. REMOVE AND REPLACE URNIALS.
8. REMOVE AND REPLACE LAVATORY.

ALL WORK SHOWN ON THIS SHEET IS BID ALTERNATE # 2.

ROOM FINISH SCHEDULE

Room Number	Room Name	Floors: Floor Finish	Floors: Base Finish	Walls: N Wall Finish	Walls: E Wall Finish	Walls: S Wall Finish	Walls: W Wall Finish	Ceilings: Ceiling Material	Comments
104	MEN	CT-1	HTB-1	PNT-1	PNT-1	PNT-1	PNT-1	ACT-1	
108	WOMEN	CT-1	HTB-1	PNT-1	PNT-1	PNT-1	PNT-1	ACT-1	
213	WOMEN	CT-1	RB-1	PNT-1	PNT-1	PNT-1	PNT-1	ACT-1	
214	MEN	CT-1	RB-1	PNT-1	PNT-1	PNT-1	PNT-1	ACT-1	
313	WOMEN	CT-1	RB-1	PNT-1	PNT-1	PNT-1	PNT-1	ACT-1	
314	MEN	CT-1	RB-1	PNT-1	PNT-1	PNT-1	PNT-1	ACT-1	
402	MEN	CT-1	HTB-1	PNT-1	PNT-1	PNT-1	PNT-1	ACT-1	
404	WOMEN	CT-1	HTB-1	PNT-1	PNT-1	PNT-1	PNT-1	ACT-1	

NOTES:
1. Where Floor Tile is indicated, it is for repairing existing surfaces damaged during replacement of plumbing fixtures or ceiling tile.
2. Where Tile Base is indicated, it is for repairing existing surfaces damaged during replacement of plumbing fixtures or ceiling tile.
3. If Wall Tile is present in restroom, paint walls above tile with PNT-1.
4. Where Wall Tile is indicated, it is for repairing existing surfaces damaged during replacement of plumbing fixtures or ceiling tile.
5. Refer to Reflected Ceiling Plans for ceiling grid, light fixture and mechanical register and diffuser layout.

FINISH LEGEND

FLOOR

NUMBER	TYPE	DETAIL DESCRIPTION
CT-1	CERAMIC TILE FLOOR	PRODUCT EQUAL TO EXISTING Manufacturer: Match Existing Style Name: Match Existing Color: Match Existing Size: Match Existing

BASE

NUMBER	TYPE	
HTB-1	HARD TILE BASE	PRODUCT EQUAL TO Manufacturer: Crossville Ceramics Style Name: Match Existing Color: TBD Size: Match Existing
RB-1	RUBBER BASE	PRODUCT EQUAL TO Manufacturer: Johnsonite Style Name: Match ExistingColor: TBD Size: Match Existing

WALL

NUMBER	TYPE	DETAIL DESCRIPTION
PNT-1	PAINT	PRODUCT EQUAL TO Manufacturer: Sherwin Williams Paints Color: Match Existing
PNT-2	PAINT	PRODUCT EQUAL TO Manufacturer: Sherwin Williams Paints Color: Match Existing
HTW-1	HARD TILE WALL	PRODUCT EQUAL TO Manufacturer: Crossville Ceramics Style Name: Match Existing Color: Match Existing Size: Match Existing

CEILING

NUMBER	TYPE	DETAIL DESCRIPTION
ACT-1	ACOUSTICAL CEILING TILE SYSTEM	BASIS OF DESIGN, PRODUCT EQUAL TO MANUFACTURER: USG CEILINGS STYLE: ASTRO ClimaPlus - SQUARE LAY-IN #8221 SUSPENSION SYSTEM: USG/DONN DX/DXL24 15/16" TEE GRID COLOR: FLAT WHITE SIZE: 24" x 24" x 5/8"

ADDITIVE ALTERNATES

ADD ALTERNATIVE #1 - REPLACE EXISTING CHILLED WATER AND HEATING HOT WATER PIPING WITH ALL NEW PIPING. EXCEPT NEWLY INSTALLED HEATING HOT WATER RUNOUTS TO HIGH BAY AIR HANDLERS. IF ADD ALTERNATE #1 IS NOT SELECTED, ONLY PIPING BRANCHES TO DEMOLISHED EQUIPMENT SHALL BE DEMOLISHED. SEE MECHANICAL DRAWINGS FOR THIS ALTERNATE.

ADD ALTERNATE #2 - REPLACE ALL WATER CLOSETS, URINALS, AND SELECTED LAVATORIES AS SHOWN, WITH NEW FIXTURES AND REPLACE ALL LAVATORY FAUCETS. REMOVE ALL DOMESTIC HOT WATER HEATERS AND REPLACE WITH A SINGLE UNIT LOCATED ON THE 4TH FLOOR. REMOVE ALL HOT WATER PIPING AND REPLACE WITH NEW PIPING. ADD A HOT WATER RE-CIRCULATION PUMP AND ASSOCIATED HOT WATER RE-CIRCULATION PIPING. SEE DRAWING A601 AND PLUMBING DRAWINGS FOR THIS ALTERNATE.

NOTE: ADDITIVE ALTERNATE #2 IS SHOWN ON THIS DRAWING SHEET AND THE PLUMBING DRAWING SHEETS.

WARNING
DO NOT SCALE THIS DRAWING
THIS DRAWING WAS DESIGNED TO BE PRINTED AT A NASA SHEET SIZE: MSFC STD, SIZE 40" X 28"

REV.	BY	DATE	REVISION	C.I. NO.	APPROVED

Marshall Space Flight Center
Huntsville, Alabama 35812

REVITALIZE BUILDING
MECHANICAL SYSTEMS (4755)

Restroom Plan Enlargements

FINAL SUBMITTAL
ISSUED FOR CONSTRUCTION

SIGNATURES ON INDEX SHEET INDICATE ACCEPTANCE OF THIS SHEET

REF. NO. A601 SHEET 6 OF 6

AE FIRM: GOODWYN MILLS CAWOOD / MERRICK & COMPANY — JOINT VENTURE

NASA AE CONTRACT NO. NASA- NNM12AA49C NNM12AA68T

SUBMITTED: JENNIFER LANDRY
AE: DATE: 11/04/13
DESIGNED L. ROBINSON
DRAWN L. ROBINSON
CHECKED L. ROBINSON
SCALE: 1/4"=1'-0"

APPROVAL RECOMMENDED: ANDY ROWLAND, AS22 PROJECT A/E
APPROVAL RECOMMENDED: ANDY ROWLAND, AS22 SUPPORT A/E
APPROVAL RECOMMENDED: NELSON OLINGER, AS22 TEAM LEAD
SPEC. NO. FAC M5057

APPROVED: JIMMY GUARIN, AS22 GROUP LEAD DATE:

DRAWING NO. FAC-DA-4755-A601

MSFC-FORM 232 REV. 8-21-89-ROL

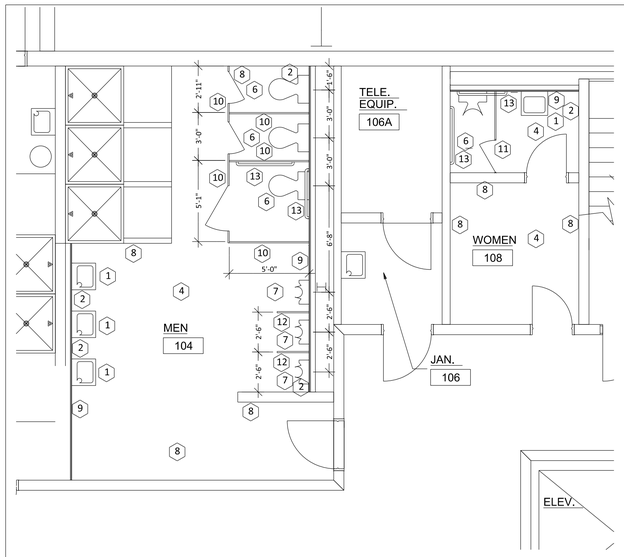

NORTH 1 A501 A602 FIRST FLOOR RESTROOM PLANS
1/4"= 1'-0"

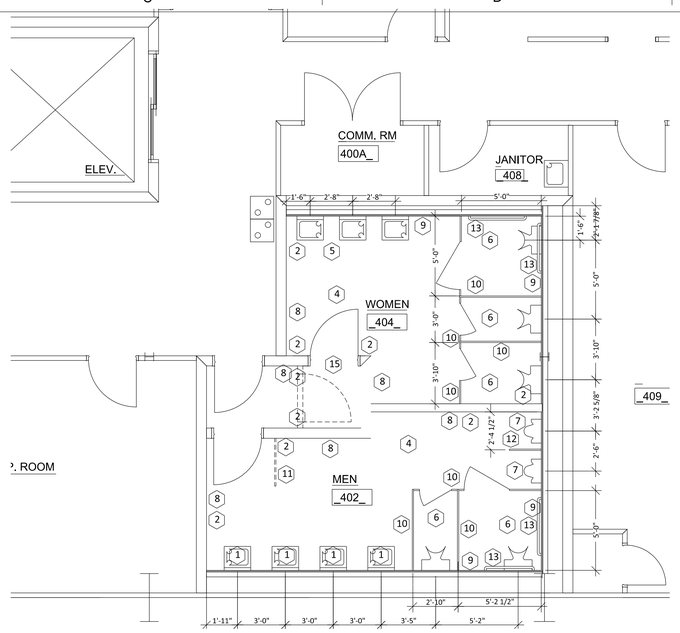

NORTH 4 A504 A602 FOURTH FLOOR RESTROOM PLANS
1/4"= 1'-0"

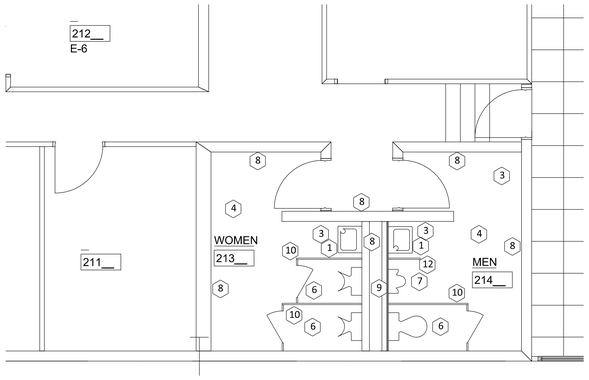

NORTH 2 A502 A602 SECOND FLOOR RESTROOM PLANS
1/4"= 1'-0"

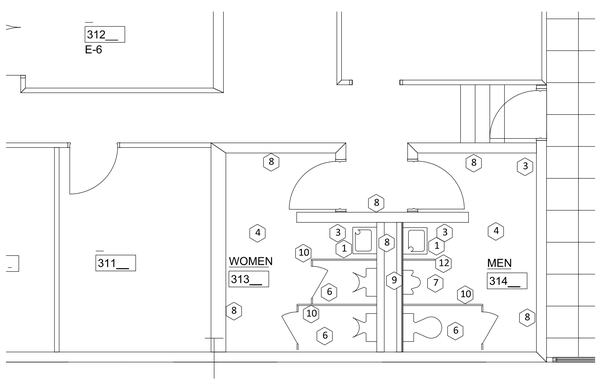

NORTH 3 A503 A602 THIRD FLOOR RESTROOM PLANS
1/4"= 1'-0"

ROOM FINISH SCHEDULE

Room Number	Room Name	Floors: Floor Finish	Floors: Base Finish	Walls: N Wall Finish	Walls: E Wall Finish	Walls: S Wall Finish	Walls: W Wall Finish	Ceilings: Ceiling Material	Comments
104	MEN	CT-1	HTB-1	PNT-1	PNT-1/HTW-1	PNT-1	PNT-1/HTW-1	ACT-1	
108	WOMEN	CT-1	HTB-1	PNT-1/HTW-1	PNT-1	PNT-1	PNT-1	ACT-1	
213	WOMEN	CT-1	RB-1	PNT-1	PNT-1	PNT-1	PNT-1	ACT-1	
214	MEN	CT-1	RB-1	PNT-1	PNT-1	PNT-1	PNT-1/HTW-1	ACT-1	
313	WOMEN	CT-1	RB-1	PNT-1	PNT-1	PNT-1	PNT-1	ACT-1	
314	MEN	CT-1	RB-1	PNT-1	PNT-1	PNT-1	PNT-1/HTW-1	ACT-1	
402	MEN	CT-1	HTB-1	PNT-1	PNT-1/HTW-1	PNT-1/HTW-1	PNT-1	ACT-1	
404	WOMEN	CT-1	HTB-1	PNT-1/HTW-1	PNT-1/HTW-1	PNT-1	PNT-1	ACT-1	

NOTES:
1. Where Floor Tile is indicated, it is for repairing existing surfaces damaged during replacement of plumbing fixtures or ceiling tile.
2. Where Tile Base is indicated, it is for repairing existing surfaces damaged during replacement of plumbing fixtures or ceiling tile.
3. If Wall Tile is present in restroom, paint walls above tile with PNT-1.
4. Where Wall Tile is indicated, it is for repairing existing surfaces damaged during replacement of plumbing fixtures or ceiling tile or for wainscot on re-placed walls. Height on wainscot to match existing height of wainscot on remaining existing walls.
5. Refer to Reflected Ceiling Plans for ceiling grid, light fixture and mechanical register and diffuser layout.

FINISH LEGEND

FLOOR

NUMBER	TYPE	DETAIL DESCRIPTION
CT-1	CERAMIC TILE FLOOR	PRODUCT EQUAL TO EXISTING Manufacturer: Match Existing Style Name: Match Existing Color: Match Existing Size: Match Existing

BASE

NUMBER	TYPE	
HTB-1	HARD TILE BASE	PRODUCT EQUAL TO Manufacturer: Crossville Ceramics Style Name: Match Existing Color: TBD Size: Match Existing

WALL

NUMBER	TYPE	DETAIL DESCRIPTION
PNT-1	PAINT	PRODUCT EQUAL TO Manufacturer: Sherwin Williams Paints Color: Match Existing
PNT-2	PAINT	PRODUCT EQUAL TO Manufacturer: Sherwin Williams Paints Color: Match Existing
HTW-1	HARD TILE WALL	PRODUCT EQUAL TO Manufacturer: Crossville Ceramics Style Name: Match Existing Color: To be selected from standard color palate. Size: Match Existing

CEILING

NUMBER	TYPE	DETAIL DESCRIPTION
ACT-1	ACOUSTICAL CEILING TILE SYSTEM	BASIS OF DESIGN, PRODUCT EQUAL TO: MANUFACTURER: USG CEILINGS STYLE: ASTRO ClimaPlus - SQUARE LAY-IN #8221 SUSPENSION SYSTEM: USG/DONN DX/DXL24 15/16" TEE GRID COLOR: FLAT WHITE SIZE: 24" x 24" x 5/8"

PLAN KEY NOTES (ADDITIVE ALTERNATE #3)

1. REMOVE AND REPLACE LAVATORY, FAUCETS, POTABLE WATER AND SANITARY PIPING.
2. REPAIR DAMAGED WALL TILE WITH SALVAGED TILE FROM REMOVED WALLS.
3. REPAIR DAMAGED GYPSUM BOARD AND PAINT WALLS.
4. PAINT GYPSUM BOARD WALLS.
5. REMOVE SINKS, VANITY, & COUNTER AND INSTALL THREE WALL HUNG LAVATORIES.
6. REMOVE AND REPLACE WATERCLOSETS.
7. REMOVE AND REPLACE URNIALS.
8. EXISTING WALL TO REMAIN.
9. REMOVE EXISTING WALL AND REPLACE WITH CERAMIC WALL TILE ON CEMENT BOARD (cement board up to wainscot height w/ GWB to deck above) OVER 3 5/8" MTL. STUDS @ 16' O.C.
10. REMOVE EXISTING TOILET PARTITIONS AND REPLACE WITH NEW TOILET PARTITIONS.
11. REMOVE EXISTING TOILET PARTITION AND DO NOT REPLACE.
12. PROVIDE 2'-0" WIDE BY 3'-6" TALL URINAL SCREEN MOUNT 12" A.F.F. TO BOTTOM.
13. PROVIDE HC GRAB BARS.
14. RE-INSTALL EXISTING TOILET ACCESSORIES.
15. REMOVE AND RE-INSTALL EXISTING DOOR AND HARDWARE.

ADDITIVE ALTERNATES

ADD ALTERNATIVE #1 - REPLACE EXISTING CHILLED WATER AND HEATING HOT WATER PIPING WITH ALL NEW PIPING. EXCEPT NEWLY INSTALLED HEATING HOT WATER RUNOUTS TO HIGH BAY AIR HANDLERS. IF ADD ALTERNATE #1 IS NOT SELECTED, ONLY PIPING BRANCHES TO DEMOLISHED EQUIPMENT SHALL BE DEMOLISHED. SEE MECHANICAL DRAWINGS FOR THIS ALTERNATE.

ADD ALTERNATE #2 - REPLACE ALL WATER CLOSETS, URINALS, AND SELECTED LAVATORIES AS SHOWN, WITH NEW FIXTURES AND REPLACE ALL LAVATORY FAUCETS. REMOVE ALL DOMESTIC HOT WATER HEATERS AND REPLACE WITH A SINGLE UNIT LOCATED ON THE 4TH FLOOR. REMOVE ALL HOT WATER PIPING AND REPLACE WITH NEW PIPING. ADD A HOT WATER RE-CIRCULATION PUMP AND ASSOCIATED HOT WATER RE-CIRCULATION PIPING. SEE DRAWING A601 AND PLUMBING DRAWINGS FOR THIS ALTERNATE.

ADD ALTERNATIVE #3 - REPLACE EXISTING SANITARY AND POTABLE WATER SYSTEMS OCCURRING ABOVE THE FIRST FINISHED FLOOR SLAB AT LOCATIONS SHOWN ON DRAWINGS. IF ADD ALTERNATE #3 IS SELECTED, DEMOLISH UNUSED SANITARY AND POTABLE WATER SUPPLY LINES. SEE PLUMBING DRAWINGS FOR THIS ALTERNATE.

ADD ALTERNATE #4 - REMOVE LIGHT FIXTURES SHOWN ON ARCHITECTURAL DRAWINGS A501 THROUGH A504 IN AREAS TO RECEIVE NEW CEILING GRID AND ACOUSTICAL TILE. FURNISH AND INSTALL NEW LIGHT FIXTURES SHOWN AND SCHEDULED ON DRAWINGS E406 & E407. USE EXISTING LIGHTING CIRCUITS AND LIGHTING CONTROLS FOR THIS ALTERNATE. COORDINATE INSTALLATION OF LIGHTING FIXTURES WITH THE MECHANICAL CONTRACTOR.

NOTE: ADDITIVE ALTERNATE #3 IS SHOWN ON THIS DRAWING SHEET AND THE PLUMBING DRAWING SHEETS.

ALL WORK SHOWN ON THIS SHEET IS BID ALTERNATE # 3.

WARNING
DO NOT SCALE THIS DRAWING
THIS DRAWING WAS DESIGNED TO BE PRINTED AT A NASA SHEET SIZE: MSFC STD, SIZE 40" X 28"

REV.	BY	DATE	REVISION	C.I. NO.	APPROVED

Marshall Space Flight Center
Huntsville, Alabama 35812

REVITALIZE BUILDING
MECHANICAL SYSTEMS (4755)

Restroom Plan Enlargements - ADD ALT #3

FINAL SUBMITTAL
ISSUED FOR CONSTRUCTION

SIGNATURES ON INDEX SHEET INDICATE ACCEPTANCE OF THIS SHEET

REF. NO. A602 SHEET 6 OF 7

AE FIRM: GOODWYN | MILLS | CAWOOD — MERRICK & COMPANY — JOINT VENTURE

NASA AE CONTRACT NO. NASA- NNM12AA49C NNM12AA68T

SUBMITTED: JENNIFER LANDRY
AE: DATE: 11/04/13
DESIGNED L. ROBINSON
DRAWN L. ROBINSON
CHECKED L. ROBINSON
SCALE: 1/4"=1'-0"

APPROVAL RECOMMENDED: ANDY ROWLAND — AS22 PROJECT A/E
APPROVAL RECOMMENDED: ANDY ROWLAND — AS22 SUPPORT A/E
APPROVAL RECOMMENDED: NELSON OLINGER — AS22 TEAM LEAD
SPEC. NO. FAC M5057

APPROVED: JIMMY GUARIN — AS22 GROUP LEAD
DATE:

DRAWING NO. FAC-DA-4755-A601

MSFC-F-FORM 232 REV. 8-21-89/RCL

ABBREVIATIONS

14x12	DUCT SIZE (RECTANGULAR)
8ø	DUCT SIZE (ROUND)
AAV	AUTOMATIC AIR VENT
A/C	ABOVE CEILING
AD	ACCESS DOOR
A/F	ABOVE FLOOR
AFF	ABOVE FINISHED FLOOR
AFG	ABOVE FINISHED GRADE
AMPS	AMPERES
AP	ACCESS PANEL
AS	AIR SEPARATOR
B/C	BELOW CEILING
BCS	BUILDING CONTROL SYSTEM
BD	BACKDRAFT DAMPER
B/F	BELOW FLOOR/RAISED
BFP	BACKFLOW PREVENTER
B/G	BELOW GRADE
BHP	BRAKE HORSEPOWER
BOD	BOTTOM OF DUCT
B/S	BELOW SLAB
BV	BALANCING VALVE
C	COMMON
C/W	COMPLETE WITH
C/C	COOLING COIL
CD	CONDENSATE DRAIN
CFH	CUBIC FEET PER HOUR
CFM	CUBIC FEET PER MINUTE
CL	CENTERLINE
CO	CLEANOUT
CV	CHECK VALVE OR CONSTANT VOLUME
DB	DRY BULB TEMPERATURE OR DECIBELS
DCW	DOMESTIC COLD WATER
DEG C	DEGREES CELSIUS
DEG F	DEGREES FAHRENHEIT
DG	DOOR GRILLE
DHW	DOMESTIC HOT WATER
DDC	DIRECT DIGITAL CONTROL
DOAS	DEDICATED OUTSIDE AIR SYSTEM
DN	DOWN
DR	DRAIN
DWH	DOMESTIC WATER HEATER
EAT	ENTERING AIR TEMPERATURE
EDB	ENTERING DRY BULB TEMPERATURE
EF	EXHAUST FAN
EG	EXHAUST GRILLE
ENT	ENTERING
ERD	EMERGENCY OVERFLOW ROOF DRAIN
ERV	ENERGY RECOVERY VENTILATOR
ET	EXPANSION TANK
ESP	EXTERNAL STATIC PRESSURE
EWB	ENTERING WET BULB TEMPERATURE
EWT	ENTERING WATER TEMPERATURE
EX	EXISTING
EXH	EXHAUST
F	FIRE LINE OR FILTER
FD	FIRE DAMPER/FLOOR DRAIN
FDC	FIRE DEPARTMENT CONNECTION
FDV	FIRE DEPARTMENT VALVE
FF	FINISHED FLOOR
FLA	FULL LOAD AMPS
FS	FLOW SWITCH
GA	GAUGE
GCO	GRADE CLEANOUT
GPM	GALLONS PER MINUTE
HB	HOSE BIBB
H/C	HEATING COIL
HD	HUB DRAIN
HRR	HEAT RECOVERY RETURN
HRS	HEAT RECOVERY SUPPLY
HRC	HEAT RECOVERY COIL
HTX	HEAT EXCHANGER
HRU	HOT WATER PUMP
HZ	HERTZ
IE	INVERT ELEVATION
INT	INTERMEDIATE
IW	INDIRECT WASTE
IN WC	INCHES OF WATER COLUMN
IN WG	INCHES OF WATER GAUGE
KW	KILOWATTS
LAT	LEAVING AIR TEMPERATURE
LRA	LOCKED ROTOR AMPS
LV	LOUVER
LVG	LEAVING
LWT	LEAVING WATER TEMPERATURE
MAX	MAXIMUM
MIN	MINIMUM
MOD	MOTOR OPERATED DAMPER
MS	MOP SINK
MT	MOUNT
MV	MIXING VALVE
MVD	MANUAL VOLUME DAMPER
NC	NORMALLY CLOSED
NIC	NOT IN CONTRACT
NTS	NOT TO SCALE
NO	NORMALLY OPEN
OA	OUTSIDE AIR
OBD	OPPOSED BLADE DAMPER
ODP	OPEN DRIP-PROOF
OSD	OPEN SITE DRAIN
P	PUMP
PD	PUMP DISCHARGE OR PRESSURE DROP
PG	PRESSURE GAUGE W/ COCK
PH	PHASE
PRV	PRESSURE REDUCING VALVE
PS	PRESSURE SWITCH
PSIG	POUNDS PER SQUARE INCH GAUGE
RA	RETURN AIR
RG	RETURN GRILLE
RHC	REHEAT COIL
RLA	RUNNING LOAD AMPS
RPM	REVOLUTIONS PER MINUTE
RPPBFP	REDUCE PRESSURE PRINCIPLE BACKFLOW PREVENTER
SA	SUPPLY AIR OR SOUND ATTENUATOR
SD	SUPPLY DIFFUSER OR SMOKE DETECTOR
SF	SUPPLY FAN
SFDC	SIAMESE FIRE DEPARTMENT CONNECTION
SCIF	SENSITIVE COMPARTMENTED INFORMATION FACILITY
SMP	SUMP
SP	STATIC PRESSURE
ST	SUPPLY TERMINAL OR STORM
SS	STAINLESS STEEL, SANITARY SEWER
SSD	SANITARY SEWER DRAINAGE
TBD	TO BE DETERMINED
TEMP	TEMPERATURE
TOD	TOP OF DUCT
T&P	TEMPERATURE & PRESSURE
TP	TRAP PRIMER
TS	TAMPER SWITCH
T/P	TEMPER & PRESSURE PORT
TSP	TOTAL STATIC PRESSURE
TYP	TYPICAL
U/C	UNDERCUT DOOR (3/4" U.N.O.)
UNO	UNLESS NOTED OTHERWISE
UR	URINAL
V	VOLTS OR VENT
VAV	VARIABLE AIR VOLUME
VD	VOLUME DAMPER
VSD	VARIABLE SPEED DRIVE
VTR	VENT THRU ROOF
W	WASTE
WB	WET BULB
WC	WATER COLUMN
WG	WATER GAUGE
WH	WATER HEATER
WHA	WATER HAMMER ARRESTER
WHYD	WALL HYDRANT

SCOPE OF ASBESTOS DEMOLITION WORK FOR HVAC

DESCRIPTION	QUANTITY
HVAC DUCT INSULATION, WITH GRAY MASTIC	400 LF
MASTIC, NEW DUCT MASTIC ON HVAC DUCTS	400 LF
MASTIC, WHITE MASTIC AND MUD ON HVAC DUCTS	400 LF
PIPE INSULATION, PIPE INSULATION MUD	600 ELBOWS
PIPE INSULATION, WITH GRAY MASTIC	3,000 LF
PIPE INSULATION, WITH PIPE MASTIC	3,000 LF

* ALL DATA PROVIDE BY NASA MSFC ASBESTOS INFORMATION SYSTEMS (AIS)

MECHANICAL SYMBOLS AND LEGEND

GENERAL SYMBOLS

- LINEAR DIFFUSER (LD)
- CEILING SUPPLY DIFFUSERS (SD)
- CEILING RETURN GRILLES (RG)
- CEILING EXHAUST GRILLES (EG)
- SIDE WALL SUPPLY GRILLE (SG)
- A XXX-XX — DIFFUSER SYMBOL (SEE SCHEDULE); QUANTITY; DESIGN AIRFLOW (CFM)
- H — HUMIDISTAT
- C02 — CARBON DIOXIDE SENSOR
- T — THERMOSTAT
- SPT — SPACE PRESSURE TRANSMITTER
- STATIC — STATIC PRESSURE SENSOR
- M — MOTORIZED VOLUME DAMPER
- ΔP — DUCT STATIC PRESSURE SENSOR
- EQUIPMENT NAME / EQUIPMENT NUMBER
- 1 — REVISION INDICATOR
- DS — DOOR SWITCH
- ES — EMERGENCY SHUTOFF
- SD — SMOKE DAMPER
- CONNECT TO EXISTING

SINGLE LINE PIPING

PIPE CAP		HWS	HEATING WATER SUPPLY
TEE DOWN		HWR	HEATING WATER RETURN
ELBOW DOWN		CHWS	CHILLED WATER SUPPLY
ELBOW UP		CHWR	CHILLED WATER RETURN
		CD	COIL CONDENSATE DRAIN
		RL	REFRIGERANT LIQUID
		RS	REFRIGERANT SUCTION

DOUBLE LINE DUCTWORK

- 12ø — ROUND DUCT SIZE, FIGURE IS DIAMETER IN INCHES
- 12x10 — RECTANGULAR DUCT SIZE, FIRST FIGURE IS SIDE SHOWN
- UP / DOWN — ROUND DUCT UP/DOWN
- UP / DOWN — EXHAUST DUCT UP/DOWN
- ROUND DUCT BREAK
- UP / DOWN — RETURN DUCT UP/DOWN
- FLEXIBLE DUCT
- UP / DOWN — SUPPLY DUCT UP/DOWN
- 90° LATERAL TAKE-OFF
- SQUARE-TO-ROUND OR ROUND-TO-SQUARE TRANSITIONS CONCENTRIC OR ECCENTRIC
- VARIABLE ANGLE TAKE-OFF
- TRANSITIONS CONCENTRIC OR ECCENTRIC
- DOWN 45° TAKE-OFF
- BRANCH DUCT W/ HEEL
- DOWN 90° TAKE-OFF
- DUCT SPLIT
- DUCT SPLIT
- ROUND BRANCH TAKE-OFF w/ SQUARE-TO-ROUND FITTING
- 90° TRANSITIONING ELBOW
- ROUND BRANCH TAKE-OFF w/ SPIN-IN FITTING
- DOVETAIL WYE
- WYE
- RECTANGULAR DUCT BREAK
- SB — SECURITY BARS
- 90° MITERED ELBOW w/TURNING VANES
- MBD — MANUAL BALANCING DAMPER
- FIRE DAMPER
- DEMO
- FIRE & SMOKE DAMPER
- ADD ALTERNATIVE DEMO

MECHANICAL GENERAL NOTES

1. ALL FLEXIBLE DUCT RUN-OUTS SHALL BE FACTORY PRE-INSULATED, NO LONGER THAN 5 FEET IN LENGTH.
2. COORDINATE LAYOUT WITH ARCHITECTURAL PLANS.
3. ALL MITERED SHEETMETAL ELBOWS IN SUPPLY DUCTWORK SHALL BE CONSTRUCTED WITH TURNING VANES.
4. DIMENSIONS ARE IN INCHES UNLESS NOTED OTHERWISE.
5. ACCESS DOORS SHALL BE PROVIDED IN THE DUCTWORK AT ALL AIR FLOW MEASURING DEVICES, AUTOMATIC DAMPERS, FIRE DAMPERS, COILS, THERMOSTATS, AND OTHER APPARATUS REQUIRING SERVICE AND INSPECTION. ENSURE ACCESS DOORS CAN BE FULLY OPENED WITHOUT CONFLICTS AND ARE LARGE ENOUGH TO SERVICE ITEMS BEHIND THE DOOR. MAINTAIN CLEARANCE REQUIREMENTS FOR ALL EQUIPMENT.
6. VERIFY ALL DIMENSIONS OF THE WORK BEFORE COMMENCING FABRICATION OR INSTALLATION.
7. PLANS ARE DIAGRAMMATIC; THE MECHANICAL CONTRACTOR SHALL VERIFY AND CONFIRM EXISTING CONDITIONS PRIOR TO ORDERING AND INSTALLING EQUIPMENT. COORDINATE THE INSTALLATION OF ANY MECHANICAL EQUIPMENT, DUCTWORK, PIPING AND ACCESSORIES WITH THE SPACES AVAILABLE.
8. CONTRACTOR TO OBTAIN CUT-SHEETS ON ALL FIXTURES AND EQUIPMENT AND PROVIDE PROPER UTILITIES AND FINAL CONNECTIONS PER MANUFACTURER'S RECOMMENDATIONS. CONNECT ALL EQUIPMENT DRAINS FULL SIZE TO HUB AND/OR FLOOR DRAIN WITH MINIMUM 1 INCH GAP FOR INDIRECT CONNECTION.
9. ALL PIPING SHALL BE CONCEALED INSIDE WALLS AND PIPE CHASES OR ABOVE CEILINGS OR BELOW RAISED FLOORS IN ALL OFFICE AREAS OF THE BUILDING. LOCATE ALL SHUT OFF VALVES WITHIN 1'-0" FROM ACCESS POINT. HOLD ALL OTHER PIPING ABOVE CEILING AS HIGH AS POSSIBLE.
10. MAKE FINAL CONNECTION TO ALL EQUIPMENT INDICATED ON DRAWINGS. FINAL CONNECTION SHALL INCLUDE ANY ADAPTERS, NIPPLES, SHUTOFF VALVES, PRESSURE REGULATING VALVES, DIRT LEGS, SHOCK ABSORBERS, BACKFLOW PREVENTION DEVICES, ETC., AS REQUIRED TO PROVIDE A FULLY OPERATIONAL SYSTEM.
11. DO NOT RUN PIPING THROUGH THE COMMUNICATIONS ROOMS OR OVER ELECTRICAL GEAR.
12. ALL STRUCTURAL PENETRATIONS (SLEEVES, BLOCKOUTS, ETC.) ARE TO BE LOCATED AND COORDINATED IN THE FIELD IN RELATION TO THE REQUIREMENTS OF FINAL EQUIPMENT AND FIXTURES SELECTED.
13. UNLESS OTHERWISE NOTED, ALL RETURN GRILLES LOCATED IN RETURN AIR PLENUMS SHALL HAVE 22"x22" NECKS.
14. PROVIDE EXPANSION LOOPS WHERE PIPING PASSES ACROSS BUILDING EXPANSION JOINTS.
15. ALL EQUIPMENT, VALVES, FANS AND DAMPERS INSTALL ABOVE CEILINGS SHALL BE ACCESSIBLE AND MEET MANUFACTURER'S CLEARANCE REQUIREMENTS FOR SERVICE AND COIL PULL. THE MECHANICAL CONTRACTOR SHALL PROVIDE ALL ACCESS PANELS IN CEILINGS OR WALLS WHERE ACCESS IS REQUIRED FOR MAINTENANCE OR REMOVAL. COORDINATE ANY INSTALLATION WITH THE COTR AND ARCHITECT.
16. PROVIDE FIRE DAMPERS IN ALL FIRE RATED WALLS AND FLOORS AS INDICATED ON DRAWINGS. RATINGS OF THE FIRE DAMPERS SHALL MEET THE WALL OR FLOOR RATINGS INDICATED ON THE DRAWINGS FOR THE INSTALLATION. INSTALL ALL FIRE DAMPERS ACCORDING TO THE MANUFACTURER'S RECOMMENDATIONS.
17. COORDINATE VOLTAGE AND PHASE OF ALL MECHANICAL EQUIPMENT WITH ELECTRICAL, THE ELECTRICAL CONTRACTOR AND THE ELECTRICAL CONTRACT DOCUMENTS PRIOR TO PURCHASE OF ANY EQUIPMENT.
18. MOUNT TEMPERATURE SENSORS, THERMOSTATS AND HUMIDISTATS AT 54" ABOVE FINISH FLOOR UNLESS INDICATED OTHERWISE. COORDINATE ANY CONFLICT WITH ARCHITECT.
19. ALL CEILING MOUNTED AIR DISTRIBUTION DEVICES MOUNTED IN INACCESSIBLE CEILINGS SHALL BE PROVIDED WITH REGULATOR TO ALLOW MANUAL BALANCING OF DEVICES.
20. ALL WIRING INSTALLED IN RETURN AIR PLENUMS SHALL BE PLENUM RATED CABLE PER NFPA-70 OR SHALL BE INSTALLED IN CONDUIT.
21. DUCT SIZES SHOWN ARE INSIDE CLEAR DIMENSIONS.
22. ALL PIPING, EQUIPMENT OR PORTIONS OF DUCTWORK VISIBLE THROUGH CEILING SLOTS, GRILLES OR DIFFUSERS IN FINISHED AREAS SHALL BE PAINTED FLAT BLACK.
23. ALL DIFFUSERS INSTALLED IN LAY-IN CEILINGS SHALL BE FOUR-WAY PATTERN UNLESS NOTED OTHERWISE. IN ALL CEILING DIFFUSERS IN CORRIDOR CEILINGS OR WITHIN THREE FEET OF THE WALL, PROVIDE TWO-WAY DIFFUSERS WITH BLOW PARALLEL TO WALL SURFACE.
24. HORIZONTAL CONDENSATE DRAIN PIPING SHALL BE SLOPED 1/4" PER FOOT DOWN IN THE DIRECTION OF FLOW.
25. AVERAGING TEMPERATURE SENSORS SHALL BE USED FOR ALL LARGE OPEN AREA WITH MULTIPLE TEMPERATURE SENSORS TO REPORT BACK TO THE UCS FOR CONTROL OF ANY MECHANICAL SYSTEM.
26. ALL SMOKE DETECTORS SHALL BE HARD WIRED INTO THE FIRE ALARM CONTROL PANEL.
27. ALL EQUIPMENT WILL BE UCS CONTROLLED.
28. GENERAL PHASING OF THE BUILDING SHALL BE FROM THE FOURTH FLOOR DOWN. CONTRACTOR SHALL KEEP BOTH HIGH BAY AREAS OPERATIONAL WHILE RENOVATING THE OFFICE AREAS.

DEMOLITION DEFINITIONS

REMOVE AND DEMOLISH	CONTRACTOR SHALL REMOVE ITEM INDICATED AND DISPOSE Of ITEM. CONTRACTOR SHALL BE RESPONSIBLE FOR DISCONNECTION Of ALL SERVICES, APPURTENANCES, AND ACCESSORIES Of ITEM INDICATED. COORDINATE DISCONNECTION OF ANY ELECTRICAL SERVICES WITH ELECTRICAL CONTRACTOR. DISPOSAL Of EQUIPMENT SHALL MEET ALL LOCAL. STATE AND FEDERAL REGULATIONS.
REMOVE AND SALVAGE	CONTRACTOR SHALL REMOVE ITEM INDICATED AND PROVIDE TO OWNER FOR USE BY OWNER. CONTRACTOR SHALL BE RESPONSIBLE FOR DISCONNECTION OF ALL SERVICES, APPURTENANCES, AND ACCESSORIES Of ITEM INDICATED. COORDINATE DISCONNECTION OF ANY ELECTRICAL SERVICES WITH ELECTRICAL CONTRACTOR.
REMOVE AND RE-USE	CONTRACTOR SHALL REMOVE ITEM FOR RE-USE ON THIS PROJECT. CONTRACTOR SHALL BE RESPONSIBLE FOR DISCONNECTION OF ALL SERVICES, APPURTENANCES. AND ACCESSORIES Of ITEM INDICATED. COORDINATE DISCONNECTION OF ANY ELECTRICAL SERVICES WITH ELECTRICAL CONTRACTOR. IN INTERIM TIME BETWEEN REMOVAL AND RE-INSTALLATION, CONTRACTOR SHALL STORE ITEM AT SITE AND PROTECT FROM DAMAGE. CONTRACTOR SHALL BE RESPONSIBLE FOR MAINTAINING EXISTING CONDITION Of ITEM AND FOR COSTS INCURRED FOR REPLACEMENT/REPAIR Of ITEM TO PRESENT CONDITION.

GENERAL PHASING NOTES

1. HIGH-BAYS NORTH AND SOUTH: THE HIGH-BAY AREAS WILL REMAIN OCCUPIED AND OPERATIONAL THROUGHOUT THIS CONSTRUCTION PROJECT.
2. THIRD AND FOURTH FLOORS: THESE FLOORS SHALL BE THE FIRST FLOORS TO HAVE THE MECHANICAL SYSTEMS REVITALIZED. DURING THIS PHASE, THE FIRST AND SECOND FLOORS WILL REMAIN OPERATIONAL AND OCCUPIED.
3. FIRST AND SECOND FLOORS: DURING THE REVITALIZATION OF THESE FLOORS THE THIRD AND FOURTH FLOORS WILL BE OCCUPIED AND FULLY OPERATIONAL.
4. ELEVATOR ACCESS: THE GENERAL CONTRACTOR SHALL MAINTAIN SAFE ACCESS TO THE ELEVATOR THROUGHOUT CONSTRUCTION.
5. THE COR WILL DETERMINE THE FINAL PHASING SCHEDULE AFTER DISCUSSIONS WITH THE USER.

GENERAL DEMOLITION NOTES

REFER TO GENERAL NOTES FOR ADDITIONAL INFORMATION AND REQUIREMENTS.

1. REPRESENTATIONS OF EXISTING SYSTEMS AND EQUIPMENT ARE BASED ON EXISTING DRAWINGS AND FIELD OBSERVATION. NOT ALL CONDITIONS COULD BE VERIFIED. CONTRACTOR SHALL FIELD-VERIFY EXTENTS OF DEMOLITION AND ALL POINTS OF CONNECTION AND COORDINATE HIS WORK TO COINCIDE WITH ALL OTHER TRADES PRIOR TO STARTING WORK. THE CONTRACTOR SHALL NOTIFY THE ENGINEER OF ANY DISCREPANCIES IN CONDITIONS WHICH WILL AFFECT THE WORK.
2. THE MECHANICAL RELATED DEMOLITION WORK INDICATED ON THE PLANS, SPECIFICATIONS, AND NOTES IS TO BE CLOSELY COORDINATED WITH THE OWNER'S REPRESENTATIVE. NO DEMOLITION SHALL TAKE PLACE IN ANY AREA OR BUILDING UNTIL THE CONTRACTOR HAS BEEN GIVEN APPROVAL TO PROCEED IN THAT SPECIFIC LOCATION. REFER TO ARCHITECTURAL DEMOLITION DRAWINGS FOR ADDITIONAL INFORMATION AND DEMOLITION SCOPE OF WORK. MECHANICAL DEMOLITION PLANS SHALL BE USED FOR MECHANICAL EQUIPMENT ONLY. REFER TO OTHER DISCIPLINE SHEETS FOR DEMOLITION OF ALL OTHER EQUIPMENT.
3. IF IT BECOMES NECESSARY DURING DEMOLITION TO TEMPORARILY REMOVE ANY EQUIPMENT, PIPING, ETC. WHICH IS NOT SPECIFICALLY NOTED TO BE REMOVED (THEREBY IMPLYING THAT THEY ARE TO BE LEFT FOR FUTURE USE), THE CONTRACTOR SHALL REINSTALL SAID SYSTEMS TO FULLY OPERABLE CONDITION IN THEIR ORIGINAL LOCATIONS.
4. DISPOSE OF REMOVED EQUIPMENT UNLESS NOTED OTHERWISE.
5. PATCH ALL OPENINGS IN WALLS, FLOORS AND CEILINGS WHICH ARE MADE FOR ACCESS TO THE EXISTING EQUIPMENT BEING DEMOLISHED OR OTHERWISE MODIFIED.
6. ANY DAMAGE TO THE OWNER'S OR TENANT'S PROPERTY, TO THE STRUCTURE OR BUILDING, OR TO EQUIPMENT RESULTING FROM THE CONTRACTOR'S OPERATIONS SHALL BE REPAIRED OR REPLACED BY THE CONTRACTOR TO THE SATISFACTION OF THE OWNER WITHOUT ADDITIONAL COST TO THE OWNER. REPAIR OR REPLACEMENT SHALL, AS A MINIMUM, EQUAL EXISTING CONDITIONS.
7. FIRE-PROOFING ON EXISTING STRUCTURE SHALL BE REPLACED OR TOUCHED-UP WHERE DISTURBED FOR THE INSTALLATION OF THE MECHANICAL SYSTEMS.
8. ANY EXISTING EQUIPMENT, DUCTS, OR PIPING THAT ARE DESIGNATED TO BE REUSED OR CONNECTED TO WHICH ARE FOUND TO BE DAMAGED OR NON-OPERABLE SHALL BE BROUGHT TO THE ATTENTION OF THE ENGINEER IMMEDIATELY. INSPECT THE EXISTING SYSTEM. BRING TO THE ATTENTION OF THE ENGINEER ANY UNUSUAL, DAMAGED, OR NON-OPERATION CONDITION OF THE EXISTING SYSTEM BEFORE PROCEEDING WITH RELATED WORK.
9. MAINTAIN THE SECURITY OF THE FACILITY AT ALL TIMES.
10. MAINTAIN THE FIRE AND SMOKE CONSTRUCTION INTEGRITY OF THE EXISTING FACILITY.
11. ASBESTOS IS PRESENT IN THE BUILDING AND WILL NEED TO BE ABATED. IF DURING THE COURSE OF THE WORK MATERIAL WHICH MAY CONTAIN ASBESTOS IS DISCOVERED, STOP WORK IMMEDIATELY AND COMPLY WITH EPA REGULATIONS TO PROTECT WORKERS AND OCCUPANTS. THE REFERENCED MATERIAL WILL BE CFR-2011-TITLE 40- VOLUME 8 - PART 61 SUBPART 140. THE CONTRACTOR SHALL ALSO NOTIFY OWNER AND ENGINEER.
12. ALL UNDERGROUND PIPING WHICH IS SHOWN TO BE TAKEN OUT OF SERVICE SHALL BE REMOVED TO POINTS INDICATED, AND REMAINING PIPE SHALL BE PURGED AND PLUGGED.
13. ALL EXISTING, ABANDONED HVAC SYSTEMS, EQUIPMENT, PIPING, AND APPURTENANCES, SHALL BE REMOVED TO THE FULLEST EXTENT POSSIBLE. CONTRACTOR SHALL NOT LEAVE ANY SYSTEM IN PLACE THAT IS TO BE DEMOLISHED UNDER THIS CONTRACT.
14. IF SELECTED, ADD ALTERNATE #3 SHALL INCLUDE REPLACEMENT OF ALL WATER CLOSETS, URINALS, SELECT LAVATORIES ON THE 4TH FLOOR, WATER HEATERS, AND PLUMBING PIPING IN ALL RESTROOMS AND BREAKROOMS.
15. ANY REFRIGERANT SYSTEM THAT IS TO BE REMOVED, SHALL HAVE ALL THE REFRIGERANT CAPTURED AND DISPOSED OF PROPERLY PER MSFC POLICY.

ADDITIVE ALTERNATES

ADD ALTERNATIVE #1 - REPLACE EXISTING CHILLED WATER AND HEATING HOT WATER PIPING WITH ALL NEW PIPING. EXCEPT NEWLY INSTALLED HEATING HOT WATER RUNOUTS TO HIGH BAY AIR HANDLERS. IF ADD ALTERNATIVE #1 IS NOT SELECTED, ONLY PIPING BRANCHES TO DEMOLISHED EQUIPMENT SHALL BE DEMOLISHED.

ADD ALTERNATIVE #2 - REPLACE ALL WATER CLOSETS, URINALS, SELECTED LAVATORIES SHOWN, WITH NEW FIXTURES AND REPLACE ALL LAVATORY FAUCETS. REMOVE ALL DOMESTIC HOT WATER HEATERS AND REPLACE WITH A SINGLE UNIT LOCATED ON THE 4TH FLOOR. REMOVE ALL HOT WATER PIPING AND REPLACE WITH NEW PIPING. ADD A HOT WATER RECIRCULATION PUMP AND ASSOCIATED HOT WATER RECIRCULATION PIPING.

ALABAMA LICENSED NO. 25590 PROFESSIONAL ENGINEER DESIDERIO HERNANDEZ

WARNING
DO NOT SCALE THIS DRAWING
THIS DRAWING WAS DESIGNED TO BE PRINTED AT A NASA SHEET SIZE: MSFC STD. SIZE 40" X 28"

REV.	BY	DATE	REVISION	C.I. NO.	APPROVED

Marshall Space Flight Center
Huntsville, Alabama 35812

REVITALIZE BUILDING
MECHANICAL SYSTEMS (4755)
MECH GEN NOTES, ABBREVIATIONS, & LEGEND

AE FIRM: GOODWYN | MILLS | CAWOOD JOINT VENTURE; MERRICK & COMPANY

NASA AE CONTRACT NO. NASA- NNM12AA49C NNM12AA68T

SUBMITTED: JENNIFER LANDRY
APPROVAL RECOMMENDED: ANDY ROLAND, AS22 PROJECT A/E
APPROVED: JIMMY GUARIN
AE: DATE: 11/04/13
APPROVAL RECOMMENDED: ANDY ROLAND, AS22 SUPPORT A/E
AS22 GROUP LEAD DATE:
DESIGNED J.MATTHEWS
DRAWN J.MATTHEWS
CHECKED D.HERNANDEZ
APPROVAL RECOMMENDED: NELSON OLINGER, AS22 TEAM LEAD
SCALE: NOT TO SCALE
SPEC. NO., FAC M5057
DRAWING NO. FAC-DA-4755-M001
SHEET __ OF __

FINAL SUBMITTAL
ISSUED FOR CONSTRUCTION

SIGNATURES ON INDEX SHEET INDICATE ACCEPTANCE OF THIS SHEET

REF. NO. 01 OF 37 M001

MSFC-FORM 232 REV. 8-21-98/KCL

MSFC Master Bid Disk 03-26-2014

1. EXISTING AIR HANDLING UNIT AT SOUTH BAY, WITH COIL CONNECTIONS.

2. EXISTING AIR HANDLING UNIT AT SOUTH BAY.

3. EXISTING AIR HANDLING UNIT AT SOUTH BAY (TYPICAL) WITH COIL, FILTER AND PLENUM.

4. EXISTING AIR HANDLING UNIT WITH DISCONNECT.

5. EXISTING CHILLED WATER PUMPS AT MAIN MECHANICAL ROOM.

6. CHILLED WATER LINES PENETRATION AT WALL IN THE MAIN MECHANICAL ROOM INTO THE SOUTH HIGH BAY.

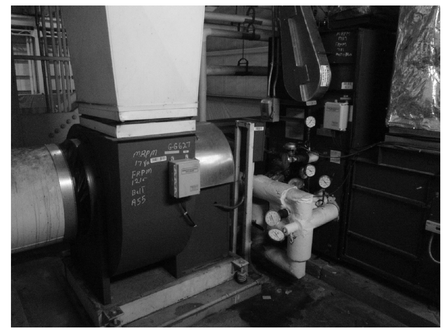

7. EXISTING EXHAUST FAN AND EXISTING AIR HANDLING UNIT IN FOURTH FLOOR MECHANICAL EQUIPMENT ROOM E-4 (400C).

8. EXISTING AIR HANDLING UNIT IN FOURTH FLOOR MECHANICAL EQUIPMENT ROOM E-4 (400C).

9. EXISTING AIR HANDLING UNIT (AH0041) IN FOURTH FLOOR MECHANICAL EQUIPMENT ROOM E-4 (400C).

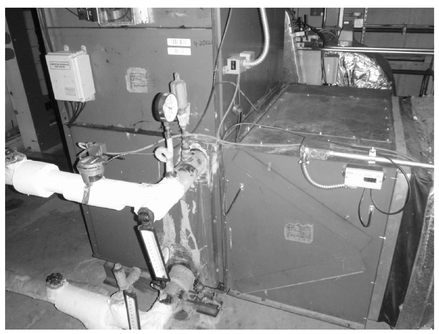

10. EXISTING AIR HANDLING UNIT (AH0041) IN FOURTH FLOOR MECHANICAL EQUIPMENT ROOM E-4 (400C).

11. EXISTING AIR HANDLING UNIT (AH0020) IN FOURTH FLOOR MECHANICAL EQUIPMENT ROOM E-4 (400C).

ALABAMA LICENSED NO. 25590 PROFESSIONAL ENGINEER DESIDERIO HERNANDEZ

WARNING
DO NOT SCALE THIS DRAWING
THIS DRAWING WAS DESIGNED TO BE PRINTED AT A NASA SHEET SIZE: MSFC STD. SIZE 40" X 28"

REV	BY	DATE	REVISION	C.I. NO.	APPROVED

Marshall Space Flight Center
Huntsville, Alabama 35812

REVITALIZE BUILDING
MECHANICAL SYSTEMS (4755)
DEMOLITION PHOTOGRAPHS SERIES 1

AE FIRM: GOODWYN | MILLS | CAWOOD — MERRICK & COMPANY
JOINT VENTURE

NASA AE CONTRACT NO.
NASA- NNM12AA49C
NNM12AA68T

SUBMITTED: JENNIFER LANDRY
APPROVAL RECOMMENDED: ANDY ROLAND, AS22 PROJECT A/E
APPROVED: JIMMY GUARIN, AS22 GROUP LEAD, DATE:
AE: DATE: 11/04/13
APPROVAL RECOMMENDED: ANDY ROLAND, AS22 SUPPORT A/E
DESIGNED J.MATTHEWS
DRAWN J.MATTHEWS
CHECKED D.HERNANDEZ
APPROVAL RECOMMENDED: NELSON OLINGER, AS22 TEAM LEAD
SCALE: NTS
SPEC. NO. FAC M5057

FINAL SUBMITTAL
ISSUED FOR CONSTRUCTION

SIGNATURES ON INDEX SHEET INDICATE ACCEPTANCE OF THIS SHEET

REF. NO. 02 OF 37
M002

DRAWING NO.
FAC-DA-4755-M002
SHEET __ OF __

MSFC-FORM 232 REV. 8-21-89-RCL

MSFC Master Bid Disk 03-26-2014

1. EXISTING AIR HANDLING UNIT IN NORTH BAY, WITH 4 PIPE COIL CONNECTIONS WITH DISCONNECTS (CHWS&R AND HWS&R).

2. EXISTING AIR HANDLING UNIT IN NORTH BAY, NO OUTSIDE AIR DUCT CONNECTION SHOWN.

3. EXISTING AIR HANDLING UNIT LOCATED IN NORTH BAY, NO OUTSIDE AIR DUCT CONNECTION.

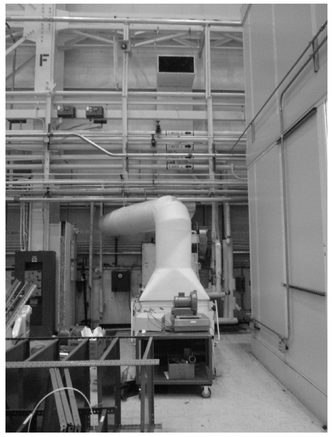

4. EXISTING AIR HANDLING UNIT IN NORTH BAY, WITH OUTSIDE AIR DUCT CONNECTION.

5. EXISTING AIR HANDLING UNIT WITH ACTUATOR.

6. CHILLED WATER COIL PIPING CONNECTIONS WITH GAUGES AND T-STATS. NOTE: PNEUMATIC CONTROLLER.

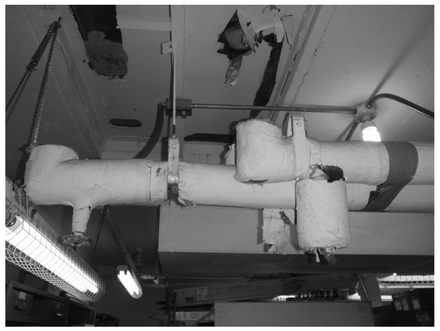

7. EXISTING ABANDONED CHILLED WATER SUPPLY AND RETURNED LINES IN THE BASEMENT (B100).

8. EXISTING AIR HANDLING UNIT IN NORTH BAY, WITH 4 PIPE COIL CONNECTIONS WITH DISCONNECTS (CHWS&R AND HWS&R).

9. TYPICAL NORTH BAY AIR HANDLING UNIT WITH COIL PIPING CONNECTIONS.

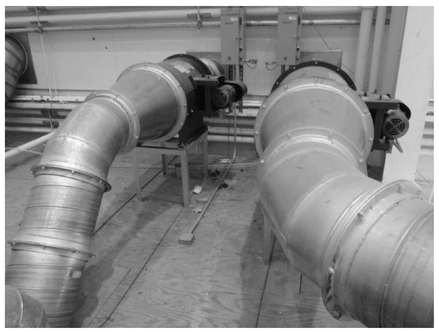

10. DUAL EXHAUST FANS. ONE FOR EACH FUME HOOD AT NORTH BAY. LOCATION ON TOP OF ROOM 102A.

11. TYPICAL AIR CURTAIN AT ENTRANCE INTO HIGH BAY AREA.

ALABAMA LICENSED NO. 25590 PROFESSIONAL ENGINEER DESIDERIO HERNANDEZ

WARNING
DO NOT SCALE THIS DRAWING
THIS DRAWING WAS DESIGNED TO BE PRINTED AT A NASA SHEET SIZE: MSFC STD. SIZE 40" X 28"

REV.	BY	DATE	REVISION	C.I. NO.	APPROVED

Marshall Space Flight Center
Huntsville, Alabama 35812

REVITALIZE BUILDING
MECHANICAL SYSTEMS (4755)
DEMOLITION PHOTOGRAPHS SERIES 2

AE FIRM: GOODWYN | MILLS | CAWOOD — MERRICK & COMPANY — JOINT VENTURE

NASA AE CONTRACT NO. NASA- NNM12AA49C NNM12AA68T

SUBMITTED: JENNIFER LANDRY
AE: DATE: 11/04/13
DESIGNED J.MATTHEWS
DRAWN J.MATTHEWS
CHECKED D.HERNANDEZ
SCALE: NTS

APPROVAL RECOMMENDED: ANDY ROLAND — A/S22 PROJECT A/E
APPROVAL RECOMMENDED: ANDY ROLAND — A/S22 SUPPORT A/E
APPROVAL RECOMMENDED: NELSON OLINGER — A/S22 TEAM LEAD
SPEC. NO. FAC M5057

APPROVED: JIMMY GUARIN — A/S22 GROUP LEAD DATE:

DRAWING NO. FAC-DA-4755-M003
SHEET __ OF __

FINAL SUBMITTAL
ISSUED FOR CONSTRUCTION

SIGNATURES ON INDEX SHEET INDICATE ACCEPTANCE OF THIS SHEET

REF. NO. 03 OF 37 M003

MSFC-FORM 232 REV. 8-21-89-RCL

MSFC Master Bid Disk 03-26-2014

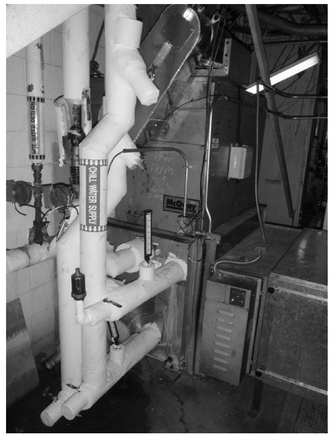

1. EXISTING AIR HANDLING UNIT LOCATED IN NORTH BAY.

2. EXISTING FILTER BOX IN-LINE CUSTOM ACCESS BOX FOR EXISTING DXAC0001. NOTE EXISTING HWDH0003 HIDDEN BEHIND THE FILTER BOX.

3. EXISTING PACKAGED DXAC0001 UNIT LOCATED BEHIND OFFICE 114A. UNIT SHALL BE REMOVED.

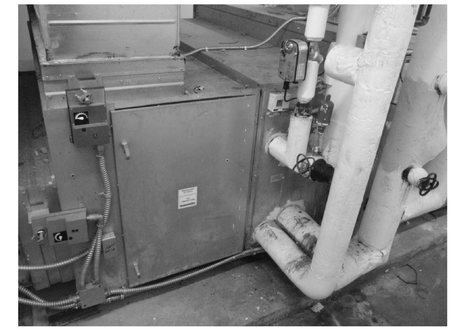

4. EXISTING AIR HANDLING UNIT WITH 4 PIPE CONNECTIONS (CHWS&R AND HWS&R).

5. EXISTING DIRECT EXPANSION AIR HANDLING UNIT, LOCATED IN CEILING SPACE ABOVE ROOM 315.

6. EXISTING DUCTS, PIPING AND AIR HANDLING UNITS LOCATED IN MECHANICAL EQUIPMENT ROOM E-4 (400B).

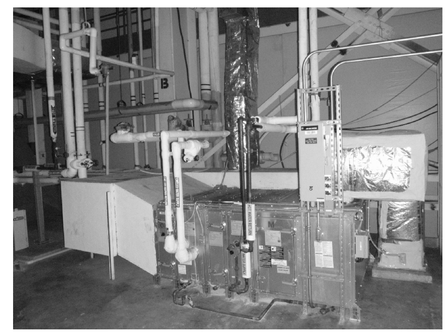

7. EXISTING AIR HANDLING UNIT (AH0044) LOCATED IN MECHANICAL EQUIPMENT ROOM E-4 (400B) WITH 4 PIPE CONNECTIONS (CHWS&R AND HWS&R).

8. EXISTING AIR HANDLING UNIT (AH0044) LOCATED IN MECHANICAL EQUIPMENT ROOM E-4 (400B) WITH 4 PIPE CONNECTIONS (CHWS&R AND HWS&R). (ZOOM-IN)

9. EXISTING DUCTWORK DOWN TO SECOND FLOOR. THE EXHAUST FAN (EAF0003) IS LOCATED BEHIND THIS DUCTWORK WITH DISCONNECT. LOCATION IS NORTH CORNER OF MECHANICAL EQUIPMENT ROOM E-4 (400B).

10. EXISTING CENTRIFUGAL UTILITY SET EXHAUST FAN (EAF0003) MOUNTED ON ISOLATION FRAME. LOCATION IS NORTH CORNER OF MECHANICAL EQUIPMENT ROOM E-4 (400B).

11. EXISTING AIR HANDLING UNIT, WITH BARE COIL PIPING.

ALABAMA LICENSED NO. 25590 PROFESSIONAL ENGINEER DESIDERIO HERNANDEZ

WARNING
DO NOT SCALE THIS DRAWING
THIS DRAWING WAS DESIGNED TO BE PRINTED AT A NASA SHEET SIZE: MSFC STD. SIZE 40" X 28"

REV.	BY	DATE	REVISION	C.I. NO.	APPROVED

Marshall Space Flight Center
Huntsville, Alabama 35812

REVITALIZE BUILDING
MECHANICAL SYSTEMS (4755)
DEMOLITION PHOTOGRAPHS SERIES 3

AE FIRM: GOODWYN | MILLS | CAWOOD — MERRICK & COMPANY — JOINT VENTURE

NASA AE CONTRACT NO.
NASA: NNM12AA49C
NNM12AA68T

SUBMITTED: JENNIFER LANDRY
APPROVAL RECOMMENDED: ANDY ROLAND, AS22 PROJECT A/E
APPROVED: JIMMY GUARIN
AE: DATE: 11/04/13
APPROVAL RECOMMENDED: ANDY ROLAND, AS22 SUPPORT A/E
AS22 GROUP LEAD DATE:
DESIGNED J.MATTHEWS
DRAWN J.MATTHEWS
CHECKED D.HERNANDEZ
APPROVAL RECOMMENDED: NELSON OLINGER, AS22 TEAM LEAD
SCALE: NTS
SPEC. NO. FAC M5057
DRAWING NO. FAC-DA-4755-M004
SHEET __ OF __

FINAL SUBMITTAL
ISSUED FOR CONSTRUCTION

SIGNATURES ON INDEX SHEET INDICATE ACCEPTANCE OF THIS SHEET

REF. NO. 04 OF 37
M004

MSFC-FORM 232 REV. 8-21-89-RCL

MSFC Master Bid Disk 03-26-2014

1. EXISTING OVERHEAD DUCTWORK AND DISTRIBUTION BRANCHES SERVING THE FORTH FLOOR.

2. CONDENSING UNIT (DXAC0010) LOCATED ON MEZZANINE CATWALK E-2 (412). (ZOOM-IN)

3. CONDENSING UNIT (DXAC0010) LOCATED ON MEZZANINE CATWALK E-2 (412), WITH DISCONNECT SWITCH AND CONTROL PANEL. (ZOOM-OUT)

4. EXISTING FLUSH VALVE ELEVATION OF WATER CLOSET IN STALL.

5. EXISTING WALL MOUNTED URINAL AND FLUSH VALVE.

6. EXISTING WALL MOUNTED LAVATORIES WITH SEPARATE HOT AND COLD WATER FAUCETS..

7. EXISTING WALL MOUNTED LAVATORY WITH DAMAGED VITREOUS CHINA FINISH.

8. EXISTING WALL MOUNTED WATER CLOSET.

9. EXISTING ADA WALL MOUNTED WATER CLOSET.

10. EXISTING WALL MOUNTED URINAL (SLIGHTLY MORE MODERN) WITH FLUSH VALVE.

11. EXISTING WALL MOUNTED URINAL WITH FLUSH VALVE.

ALABAMA LICENSED NO. 25590 PROFESSIONAL ENGINEER DESIERIO HERNANDEZ

WARNING
DO NOT SCALE THIS DRAWING
THIS DRAWING WAS DESIGNED TO BE PRINTED AT A NASA SHEET SIZE: MSFC STD. SIZE 40" X 28"

REV.	BY	DATE	REVISION	C.I. NO.	APPROVED

Marshall Space Flight Center
Huntsville, Alabama 35812

REVITALIZE BUILDING
MECHANICAL SYSTEMS (4755)
DEMOLITION PHOTOGRAPHS SERIES 4

AE FIRM: GOODWYN | MILLS | CAWOOD — MERRICK & COMPANY
JOINT VENTURE

NASA AE CONTRACT NO. NASA: NNM12AA49C NNM12AA68T

SUBMITTED: JENNIFER LANDRY
APPROVAL RECOMMENDED: ANDY ROLAND, AS22 PROJECT A/E
APPROVED: JIMMY GUARIN, AS22 GROUP LEAD, DATE:
AE: DATE: 11/04/13
APPROVAL RECOMMENDED: ANDY ROLAND, AS22 SUPPORT A/E
DESIGNED: J.MATTHEWS
DRAWN: J.MATTHEWS
CHECKED: D.HERNANDEZ
APPROVAL RECOMMENDED: NELSON OLINGER, AS22 TEAM LEAD
SCALE: NTS
SPEC. NO. FAC: M5057

DRAWING NO. FAC-DA-4755-M005
SHEET __ OF __

FINAL SUBMITTAL
ISSUED FOR CONSTRUCTION

SIGNATURES ON INDEX SHEET INDICATE ACCEPTANCE OF THIS SHEET

REF. NO. 05 OF 37 M005

MSFC-FORM 232 REV. 9-21-89-RCL

MSFC Master Bid Disk 03-26-2014

GENERAL SHEET NOTES:

1. REFER TO SHEET M-001 FOR GENERAL NOTES APPLYING TO ALL MECHANICAL SHEETS.

2. ADD ALTERNATIVE #1 – REPLACE EXISTING CHILLED WATER AND HEATING HOT WATER PIPING WITH ALL NEW PIPING. EXCEPT NEWLY INSTALLED HEATING HOT WATER RUNOUTS TO HIGH BAY AIR HANDLERS. IF ADD ALTERNATIVE #1 IS NOT SELECTED, ONLY PIPING BRANCHES TO DEMOLISHED EQUIPMENT SHALL BE DEMOLISHED.

3. ADD ALTERNATIVE #2 – REPLACE ALL WATER CLOSETS, URINALS, SELECTED LAVATORIES SHOWN, WITH NEW FIXTURES AND REPLACE ALL LAVATORY FAUCETS. REMOVE ALL DOMESTIC HOT WATER HEATERS AND REPLACE WITH A SINGLE UNIT LOCATED ON THE 4TH FLOOR. REMOVE ALL HOT WATER PIPING AND REPLACE WITH NEW PIPING. ADD A HOT WATER RECIRCULATION PUMP AND ASSOCIATED HOT WATER RECIRCULATION PIPING.

DEMOLITION NOTES:

1. REMOVE EXISTING PIPING & INSULATION.
2. EXISTING SUMP PUMP AND PIPING TO REMAIN.
3. REMOVE EXISTING DUCTWORK.
4. REMOVE EXISTING CONTROLS AND SENSORS.

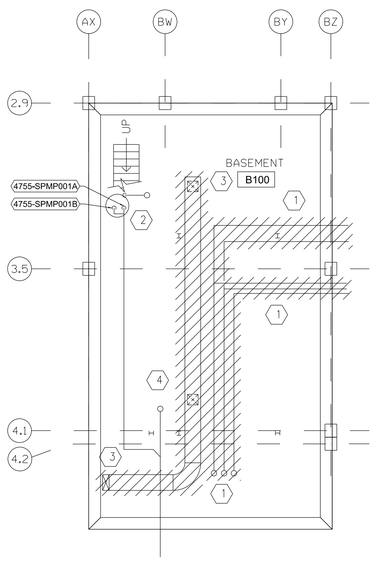

HVAC BASEMENT DEMOLITION PLAN

SCALE: 1/8" = 1'-0"

1 / M100

N

GENERAL DEMOLITION NOTES

REFER TO GENERAL NOTES FOR ADDITIONAL INFORMATION AND REQUIREMENTS.

1. REPRESENTATIONS OF EXISTING SYSTEMS AND EQUIPMENT ARE BASED ON EXISTING DRAWINGS AND FIELD OBSERVATION. NOT ALL CONDITIONS COULD BE VERIFIED. CONTRACTOR SHALL FIELD-VERIFY EXTENTS OF DEMOLITION AND ALL POINTS OF CONNECTION AND COORDINATE HIS WORK TO COINCIDE WITH ALL OTHER TRADES PRIOR TO STARTING WORK. THE CONTRACTOR SHALL NOTIFY THE ENGINEER OF ANY DISCREPANCIES IN CONDITIONS WHICH WILL AFFECT THE WORK.
2. THE MECHANICAL RELATED DEMOLITION WORK INDICATED ON THE PLANS, SPECIFICATIONS, AND NOTES IS TO BE CLOSELY COORDINATED WITH THE OWNER'S REPRESENTATIVE. NO DEMOLITION SHALL TAKE PLACE IN ANY AREA OR BUILDING UNTIL THE CONTRACTOR HAS BEEN GIVEN APPROVAL TO PROCEED IN THAT SPECIFIC LOCATION. REFER TO ARCHITECTURAL DEMOLITION DRAWINGS FOR ADDITIONAL INFORMATION AND DEMOLITION SCOPE OF WORK. MECHANICAL DEMOLITION PLANS SHALL BE USED FOR MECHANICAL EQUIPMENT ONLY. REFER TO OTHER DISCIPLINE SHEETS FOR DEMOLITION OF ALL OTHER EQUIPMENT.
3. IF IT BECOMES NECESSARY DURING DEMOLITION TO TEMPORARILY REMOVE ANY EQUIPMENT, PIPING, ETC. WHICH IS NOT SPECIFICALLY NOTED TO BE REMOVED (THEREBY IMPLYING THAT THEY ARE TO BE LEFT FOR FUTURE USE), THE CONTRACTOR SHALL REINSTALL SAID SYSTEMS TO FULLY OPERABLE CONDITION IN THEIR ORIGINAL LOCATIONS.
4. DISPOSE OF REMOVED EQUIPMENT UNLESS NOTED OTHERWISE.
5. PATCH ALL OPENINGS IN WALLS, FLOORS AND CEILINGS WHICH ARE MADE FOR ACCESS TO THE EXISTING EQUIPMENT BEING DEMOLISHED OR OTHERWISE MODIFIED.
6. ANY DAMAGE TO THE OWNER'S OR TENANT'S PROPERTY, TO THE STRUCTURE OR BUILDING, OR TO EQUIPMENT RESULTING FROM THE CONTRACTOR'S OPERATIONS SHALL BE REPAIRED OR REPLACED BY THE CONTRACTOR TO THE SATISFACTION OF THE OWNER WITHOUT ADDITIONAL COST TO THE OWNER. REPAIR OR REPLACEMENT SHALL, AS A MINIMUM, EQUAL EXISTING CONDITIONS.
7. FIRE-PROOFING ON EXISTING STRUCTURE SHALL BE REPLACED OR TOUCHED-UP WHERE DISTURBED FOR THE INSTALLATION OF THE MECHANICAL SYSTEMS.
8. ANY EXISTING EQUIPMENT, DUCTS, OR PIPING THAT ARE DESIGNATED TO BE REUSED OR CONNECTED TO WHICH ARE FOUND TO BE DAMAGED OR NON-OPERABLE SHALL BE BROUGHT TO THE ATTENTION OF THE ENGINEER IMMEDIATELY. INSPECT THE EXISTING SYSTEM. BRING TO THE ATTENTION OF THE ENGINEER ANY UNUSUAL, DAMAGED, OR NON-OPERATION CONDITION OF THE EXISTING SYSTEM BEFORE PROCEEDING WITH RELATED WORK.
9. MAINTAIN THE SECURITY OF THE FACILITY AT ALL TIMES.
10. MAINTAIN THE FIRE AND SMOKE CONSTRUCTION INTEGRITY OF THE EXISTING FACILITY.
11. ASBESTOS IS PRESENT IN THE BUILDING AND WILL NEED TO BE ABATED. IF DURING THE COURSE OF THE WORK MATERIAL WHICH MAY CONTAIN ASBESTOS IS DISCOVERED, STOP WORK IMMEDIATELY AND COMPLY WITH EPA REGULATIONS TO PROTECT WORKERS AND OCCUPANTS. THE REFERENCED MATERIAL WILL BE CFR-2011-TITLE 40- VOLUME 8 – PART 61 SUBPART 140. THE CONTRACTOR SHALL ALSO NOTIFY OWNER AND ENGINEER.
12. ALL UNDERGROUND PIPING WHICH IS SHOWN TO BE TAKEN OUT OF SERVICE SHALL BE REMOVED TO POINTS INDICATED, AND REMAINING PIPE SHALL BE PURGED AND PLUGGED.
13. ALL EXISTING, ABANDONED HVAC SYSTEMS, EQUIPMENT, PIPING, AND APPURTENANCES, SHALL BE REMOVED TO THE FULLEST EXTENT POSSIBLE. CONTRACTOR SHALL NOT LEAVE ANY SYSTEM IN PLACE THAT IS TO BE DEMOLISHED UNDER THIS CONTRACT.
14. IF SELECTED, ADD ALTERNATE #3 SHALL INCLUDE REPLACEMENT OF ALL WATER CLOSETS, URINALS, SELECT LAVATORIES ON THE 4TH FLOOR, WATER HEATERS, AND PLUMBING PIPING IN ALL RESTROOMS AND BREAKROOMS.
15. ANY REFRIGERANT SYSTEM THAT IS TO BE REMOVED, SHALL HAVE ALL THE REFRIGERANT CAPTURED AND DISPOSED OF PROPERLY PER MSFC POLICY.

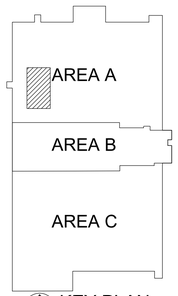

KEY PLAN
NOT TO SCALE

ALABAMA LICENSED NO. 25590 PROFESSIONAL ENGINEER DESIDERIO HERNANDEZ

WARNING
DO NOT SCALE THIS DRAWING
THIS DRAWING WAS DESIGNED TO BE PRINTED AT A NASA SHEET SIZE: MSFC STD. SIZE 40" X 28"

REV.	BY	DATE	REVISION	C.I. NO.	APPROVED

Marshall Space Flight Center
Huntsville, Alabama 35812

REVITALIZE BUILDING
MECHANICAL SYSTEMS (4755)
HVAC BASEMENT DEMOLITION PLAN

8 6 4 2 0 16 FEET
7 5 3 1 8
SCALE: 1/8" = 1'-0"

AE FIRM: GOODWYN | MILLS | CAWOOD — MERRICK & COMPANY — JOINT VENTURE

NASA AE CONTRACT NO.
NASA: NNM12AA49C
NNM12AA68T

SUBMITTED: JENNIFER LANDRY
APPROVAL RECOMMENDED: ANDY ROLAND, AS22 PROJECT A/E
APPROVED: JIMMY GUARIN

AE: DATE: 02/28/2014
DESIGNED J.MATTHEWS
DRAWN J.MATTHEWS
CHECKED D.HERNANDEZ
SCALE: 1/8"=1'-0"
APPROVAL RECOMMENDED: ANDY ROLAND, AS22 SUPPORT A/E
APPROVAL RECOMMENDED: NELSON OLINGER, AS22 TEAM LEAD
SPEC. NO. FAC M5057
AS22 GROUP LEAD DATE:

DRAWING NO.
FAC-DA-4755-M100
SHEET __ OF __

FINAL SUBMITTAL
ISSUED FOR CONSTRUCTION

SIGNATURES ON INDEX SHEET INDICATE ACCEPTANCE OF THIS SHEET

REF. NO.
06 OF 37
M100

MSFC-FORM 232 REV. 8-21-99-RCL

M100.dwg

MSFC Master Bid Disk 03-26-2014

GENERAL NOTES:

1. REFER TO SHEET M-001 FOR GENERAL NOTES APPLYING TO ALL MECHANICAL SHEETS.

2. ADD ALTERNATIVE #1 – REPLACE EXISTING CHILLED WATER AND HEATING HOT WATER PIPING WITH ALL NEW PIPING. EXCEPT NEWLY INSTALLED HEATING HOT WATER RUNOUTS TO HIGH BAY AIR HANDLERS. IF ADD ALTERNATIVE #1 IS NOT SELECTED, ONLY PIPING BRANCHES TO DEMOLISHED EQUIPMENT SHALL BE DEMOLISHED.

3. ADD ALTERNATIVE #2 – REPLACE ALL WATER CLOSETS, URINALS, SELECTED LAVATORIES SHOWN, WITH NEW FIXTURES AND REPLACE ALL LAVATORY FAUCETS. REMOVE ALL DOMESTIC HOT WATER HEATERS AND REPLACE WITH A SINGLE UNIT LOCATED ON THE 4TH FLOOR. REMOVE ALL HOT WATER PIPING AND REPLACE WITH NEW PIPING. ADD A HOT WATER RECIRCULATION PUMP AND ASSOCIATED HOT WATER RECIRCULATION PIPING.

DEMOLITION NOTES:

1. REMOVE EXISTING AIR HANDLERS, DUCTWORK, & AIR TERMINALS. HOT WATER RUNOUTS TO AHU'S TO REMAIN.
2. IF ADD ALTERNATE #1 IS SELECTED, REMOVE EXISTING HEATING AND CHILLED WATER PIPING TO EXTENT SHOWN.
3. EXISTING AIR COMPRESSOR TO BE REMOVED.
4. REMOVE EXISTING DUCTWORK.
5. EXISTING HVAC SYSTEM TO REMAIN.
6. EXISTING CHILLERS TO REMAIN (USER OWNED).
7. EXISTING FAN COIL AND AIR CURTAIN TO BE REMOVED.
8. EXISTING SUPPLY AIR FAN TO BE REMOVED. NEW DIFFUSER WILL BE ADDED, SEE M201 FOR NEW WORK.
9. EXISTING HOT WATER HEATER TO BE REMOVED.
10. EXISTING DX PTAC UNIT TO BE REMOVED.
11. EXISTING USER OWNED HVAC EQUIPMENT TO REMAIN.
12. EXISTING FUME HOOD TO REMAIN.

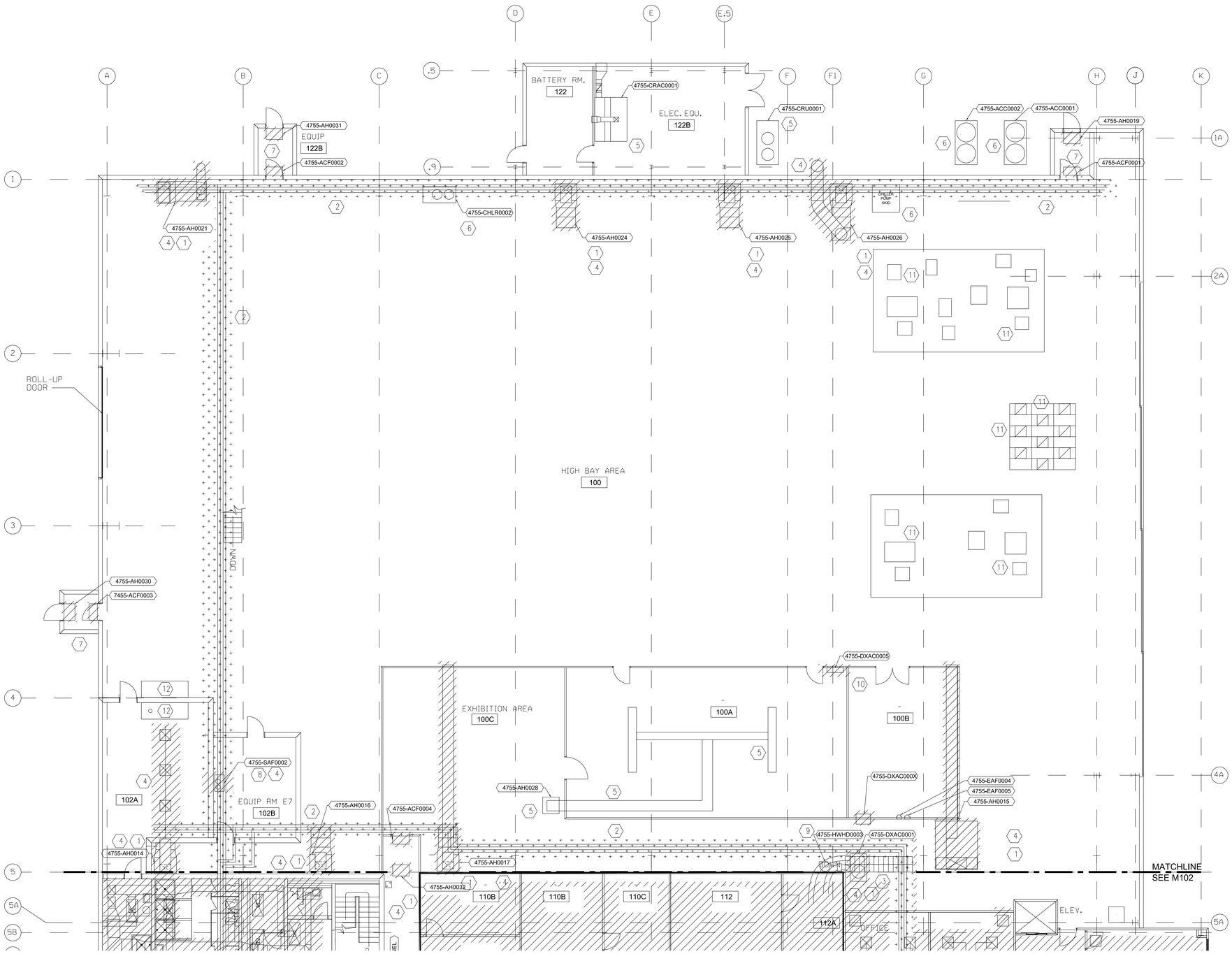

HVAC FIRST FLOOR DEMOLITION PLAN – AREA "A"

SCALE: 1/8" = 1'-0"

1 M101

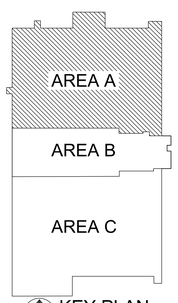

KEY PLAN
NOT TO SCALE

ALABAMA LICENSED NO. 25590 PROFESSIONAL ENGINEER DESIDERIO HERNANDEZ

WARNING
DO NOT SCALE THIS DRAWING
THIS DRAWING WAS DESIGNED TO BE PRINTED AT A NASA SHEET SIZE: MSFC STD. SIZE 40" X 28"

REV.	BY	DATE	REVISION	C.I. NO.	APPROVED

Marshall Space Flight Center
Huntsville, Alabama 35812

REVITALIZE BUILDING
MECHANICAL SYSTEMS (4755)
HVAC FIRST FLOOR DEMOLITION PLAN - AREA"A"

AE FIRM: GOODWYN | MILLS | CAWOOD — MERRICK & COMPANY — JOINT VENTURE

NASA AE CONTRACT NO. NASA- NNM12AA49C NNM12AA68T

SUBMITTED: JENNIFER LANDRY
APPROVAL RECOMMENDED: ANDY ROLAND, AS22 PROJECT A/E
APPROVED: JIMMY GUARIN

AE: DATE: 02/28/2014
APPROVAL RECOMMENDED: ANDY ROLAND, AS22 SUPPORT A/E
AS22 GROUP LEAD DATE:

DESIGNED J.MATTHEWS
DRAWN J.MATTHEWS
CHECKED D.HERNANDEZ
APPROVAL RECOMMENDED: NELSON OLINGER, AS22 TEAM LEAD

SCALE: 1/8"=1'-0"
SPEC. NO. FAC M5057

DRAWING NO. FAC-DA-4755-M101
SHEET __ OF __

FINAL SUBMITTAL
ISSUED FOR CONSTRUCTION

SIGNATURES ON INDEX SHEET INDICATE ACCEPTANCE OF THIS SHEET

REF. NO. 07 OF 37 **M101**

MSFC-FORM 232 REV. 8-21-89-RCL

M101.dwg

MSFC Master Bid Disk 03-26-2014

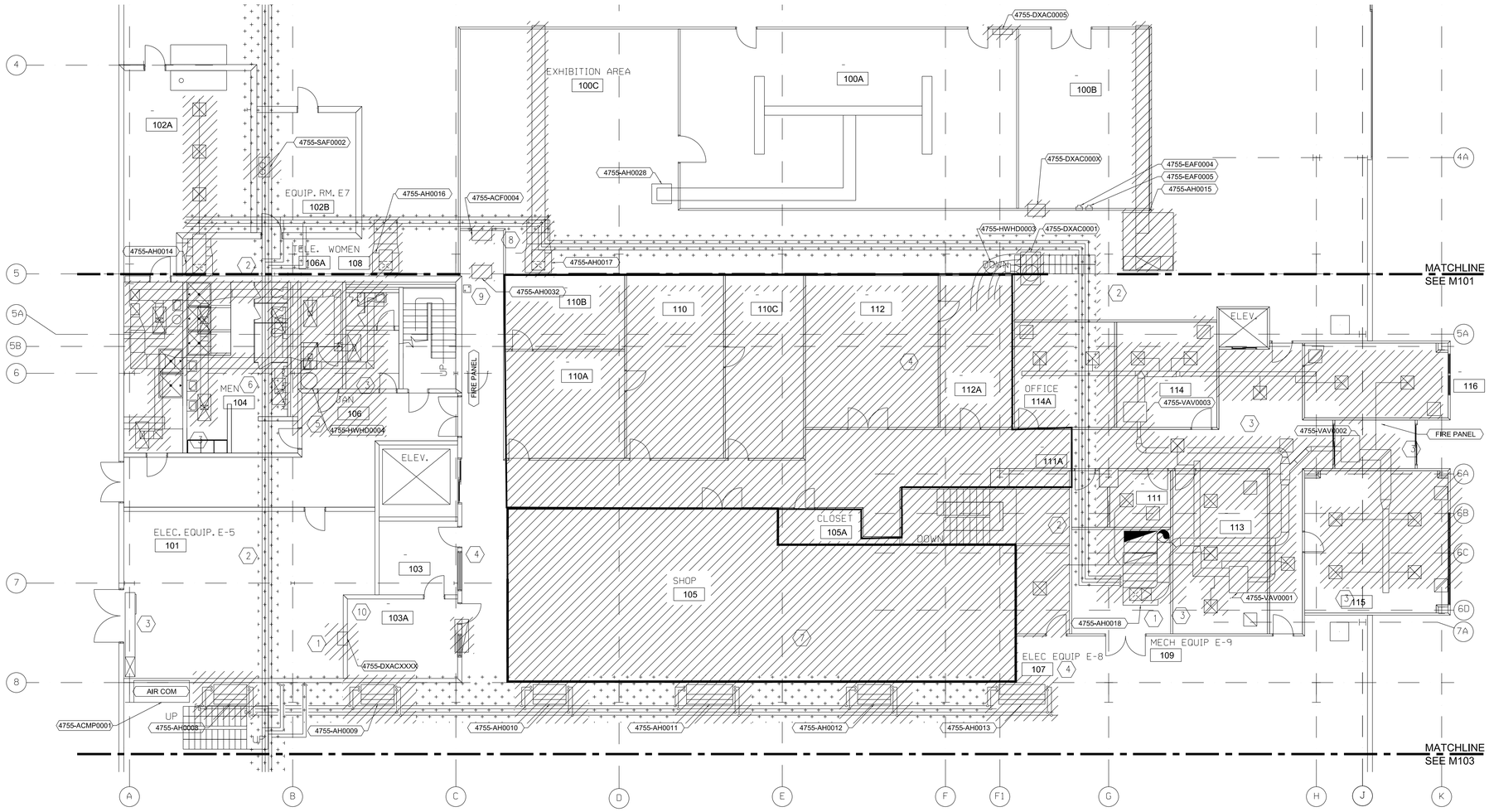

HVAC FIRST FLOOR DEMOLITION PLAN – AREA "B"

SCALE: 1/8" = 1'-0"

1 / M102

GENERAL NOTES:

1. REFER TO SHEET M-001 FOR GENERAL NOTES APPLYING TO ALL MECHANICAL SHEETS.

2. ADD ALTERNATIVE #1 – REPLACE EXISTING CHILLED WATER AND HEATING HOT WATER PIPING WITH ALL NEW PIPING. EXCEPT NEWLY INSTALLED HEATING HOT WATER RUNOUTS TO HIGH BAY AIR HANDLERS. IF ADD ALTERNATIVE #1 IS NOT SELECTED, ONLY PIPING BRANCHES TO DEMOLISHED EQUIPMENT SHALL BE DEMOLISHED.

3. ADD ALTERNATIVE #2 – REPLACE ALL WATER CLOSETS, URINALS, SELECTED LAVATORIES SHOWN, WITH NEW FIXTURES AND REPLACE ALL LAVATORY FAUCETS. REMOVE ALL DOMESTIC HOT WATER HEATERS AND REPLACE WITH A SINGLE UNIT LOCATED ON THE 4TH FLOOR. REMOVE ALL HOT WATER PIPING AND REPLACE WITH NEW PIPING. ADD A HOT WATER RECIRCULATION PUMP AND ASSOCIATED HOT WATER RECIRCULATION PIPING.

DEMOLITION NOTES:

1. REMOVE EXISTING AIR HANDLER.
2. IF ADD ALTERNATE #1 IS SELECTED, REMOVE EXISTING HEATING AND CHILLED WATER PIPING TO EXTENT SHOWN.
3. REMOVE EXISTING DUCTWORK, VAV BOXES, & AIR TERMINALS.
4. AREA SERVED BY PACKAGED DXAC-01. REMOVE ALL DUCTWORK, AIR TERMINALS, AND HVAC EQUIPMENT SERVING THIS AREA.
5. IF ADD ALTERNATE #2 IS SELECTED, EXISTING ELECTRIC HOT WATER HEATER TO BE REMOVED.
6. IF ADD ALTERNATE #2 IS SELECTED, REMOVE EXISTING WATER CLOSETS AND URINALS.
7. AREA SERVED BY PACKAGED AH0012. REMOVE ALL DUCTWORK, AIR TERMINALS, AND HVAC EQUIPMENT SERVING THIS AREA.
8. DEMO AH0032.
9. DEMO ACF0032
10. PATCH, REPAIR & PAINT TO MATCH EXISTING FINISHES.

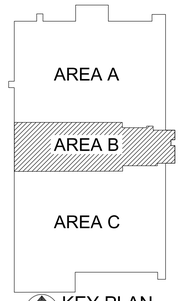

KEY PLAN
NOT TO SCALE

ALABAMA LICENSED NO. 25590 PROFESSIONAL ENGINEER DESIDERIO HERNANDEZ

WARNING
DO NOT SCALE THIS DRAWING
THIS DRAWING WAS DESIGNED TO BE PRINTED AT A NASA SHEET SIZE: MSFC STD. SIZE 40" X 28"

REV.	BY	DATE	REVISION	C.I. NO.	APPROVED

Marshall Space Flight Center
Huntsville, Alabama 35812

REVITALIZE BUILDING
MECHANICAL SYSTEMS (4755)
HVAC FIRST FLOOR DEMOLITION PLAN - AREA "B"

8 6 4 2 0 16 FEET
7 5 3 1 8
SCALE: 1/8" = 1'-0"

FINAL SUBMITTAL
ISSUED FOR CONSTRUCTION

SIGNATURES ON INDEX SHEET INDICATE ACCEPTANCE OF THIS SHEET

REF. NO. 08 OF 37 M102

AE FIRM: GOODWYN | HILLS | CAWOOD MERRICK & COMPANY JOINT VENTURE

NASA AE CONTRACT NO. NASA- NNM12AA49C NNM12AA68T

SUBMITTED: JENNIFER LANDRY
APPROVAL RECOMMENDED: ANDY ROLAND, AS22 PROJECT A/E
APPROVED: JIMMY GUARIN
AE: DATE: 02/28/2014
APPROVAL RECOMMENDED: ANDY ROLAND, AS22 SUPPORT A/E
AS22 GROUP LEAD DATE:
DESIGNED J.MATTHEWS
DRAWN J.MATTHEWS
CHECKED D.HERNANDEZ
APPROVAL RECOMMENDED: NELSON OLINGER, AS22 TEAM LEAD
SCALE: 1/8"=1'-0"
SPEC. NO. FAC M5057
DRAWING NO. FAC-DA-4755-M102
SHEET __ OF __

MSFC-FORM 232 REV. 8-21-89-RCL

M102.dwg

MSFC Master Bid Disk 03-26-2014

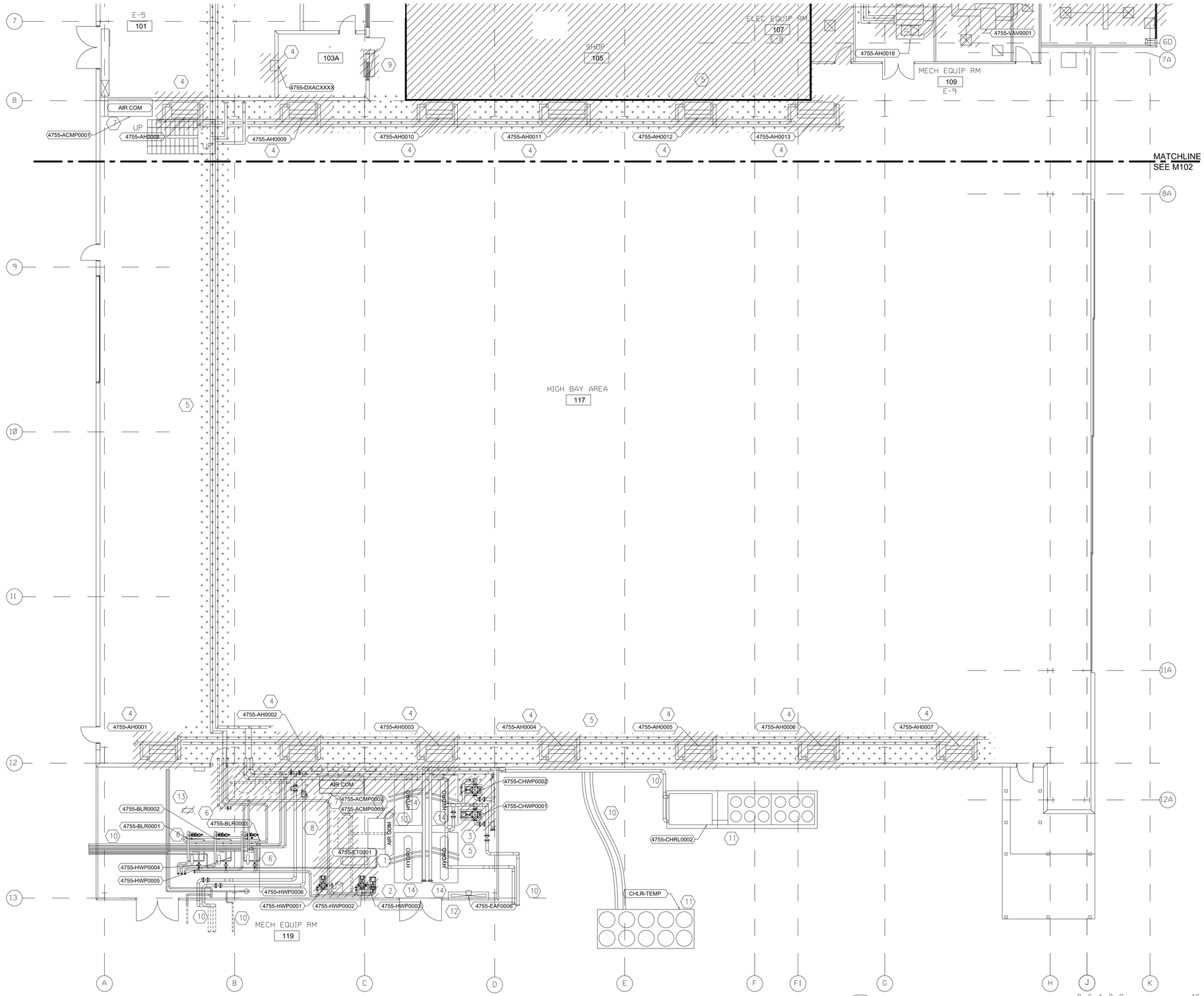

HVAC FIRST FLOOR DEMOLITION PLAN – AREA "C"

SCALE: 1/8" = 1'-0"

1 M103

GENERAL NOTES:

1. REFER TO SHEET M-001 FOR GENERAL NOTES APPLYING TO ALL MECHANICAL SHEETS.

2. ADD ALTERNATIVE #1 – REPLACE EXISTING CHILLED WATER AND HEATING HOT WATER PIPING WITH ALL NEW PIPING. EXCEPT NEWLY INSTALLED HEATING HOT WATER RUNOUTS TO HIGH BAY AIR HANDLERS. IF ADD ALTERNATIVE #1 IS NOT SELECTED, ONLY PIPING BRANCHES TO DEMOLISHED EQUIPMENT SHALL BE DEMOLISHED.

3. ADD ALTERNATIVE #2 – REPLACE ALL WATER CLOSETS, URINALS, SELECTED LAVATORIES SHOWN, WITH NEW FIXTURES AND REPLACE ALL LAVATORY FAUCETS. REMOVE ALL DOMESTIC HOT WATER HEATERS AND REPLACE WITH A SINGLE UNIT LOCATED ON THE 4TH FLOOR. REMOVE ALL HOT WATER PIPING AND REPLACE WITH NEW PIPING. ADD A HOT WATER RECIRCULATION PUMP AND ASSOCIATED HOT WATER RECIRCULATION PIPING.

DEMOLITION NOTES:

1. REMOVE EXISTING EXPANSION TANK.
2. REMOVE EXISTING HOT WATER PUMPS.
3. REMOVE EXISTING CHILLED WATER PUMPS.
4. REMOVE EXISTING AIR HANDLERS, DUCTWORK, & AIR TERMINALS. HOT WATER PIPING RUNOUTS TO REMAIN.
5. IF ADD ALTERNATE #1 IS SELECTED, REMOVE EXISTING HEATING AND CHILLED WATER PIPING TO EXTENT SHOWN.
6. EXISTING BOILERS AND PUMPS TO REMAIN.
7. EXISTING PNEUMATIC CONTROL AIR COMPRESSOR TO BE REMOVED.
8. REMOVE EXISTING STEAM PIPING.
9. REMOVE EXISTING DUCTWORK.
10. EXISTING PIPING TO REMAIN.
11. EXISTING CHILLER TO REMAIN.
12. EXISTING FAN TO REMAIN.
13. EXISTING UNIT HEATERS (HYDRONIC) TO BE REMOVED.
14. EXISTING HYDRAULIC UNITS AND FLEXIBLE PIPING TO REMAIN.

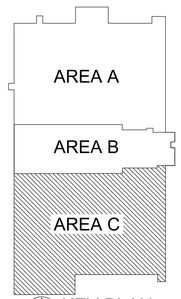

KEY PLAN
NOT TO SCALE

ALABAMA LICENSED NO. 25590 PROFESSIONAL ENGINEER DESIDERIO HERNANDEZ

WARNING
DO NOT SCALE THIS DRAWING
THIS DRAWING WAS DESIGNED TO BE PRINTED AT A NASA SHEET SIZE: MSFC STD. SIZE 40" X 28"

REV.	BY	DATE	REVISION	C.I. NO.	APPROVED

Marshall Space Flight Center
Huntsville, Alabama 35812

REVITALIZE BUILDING
MECHANICAL SYSTEMS (4755)
HVAC FIRST FLOOR DEMOLITION PLAN - AREA "C"

AE FIRM: GOODWYN | MILLS | CAWOOD — MERRICK & COMPANY — JOINT VENTURE

NASA AE CONTRACT NO.
NASA- NNM12AA49C
NNM12AA68T

SUBMITTED: JENNIFER LANDRY
APPROVAL RECOMMENDED: ANDY ROLAND, AS22 PROJECT A/E
APPROVED: JIMMY GUARIN

AE: DATE: 02/28/2014
DESIGNED J.MATTHEWS
DRAWN J.MATTHEWS
CHECKED D.HERNANDEZ
SCALE: 1/8"=1'-0"

APPROVAL RECOMMENDED: ANDY ROLAND, AS22 SUPPORT A/E
APPROVAL RECOMMENDED: NELSON OLINGER, AS22 TEAM LEAD
SPEC. NO. FAC M5057

AS22 GROUP LEAD DATE

DRAWING NO.
FAC-DA-4755-M103
SHEET __ OF __

FINAL SUBMITTAL
ISSUED FOR CONSTRUCTION

SIGNATURES ON INDEX SHEET INDICATE ACCEPTANCE OF THIS SHEET

REF. NO.
09 OF 37
M103

MSFC-FORM 232 REV. 8-21-89-RCL

M103.dwg

MSFC Master Bid Disk 03-26-2014

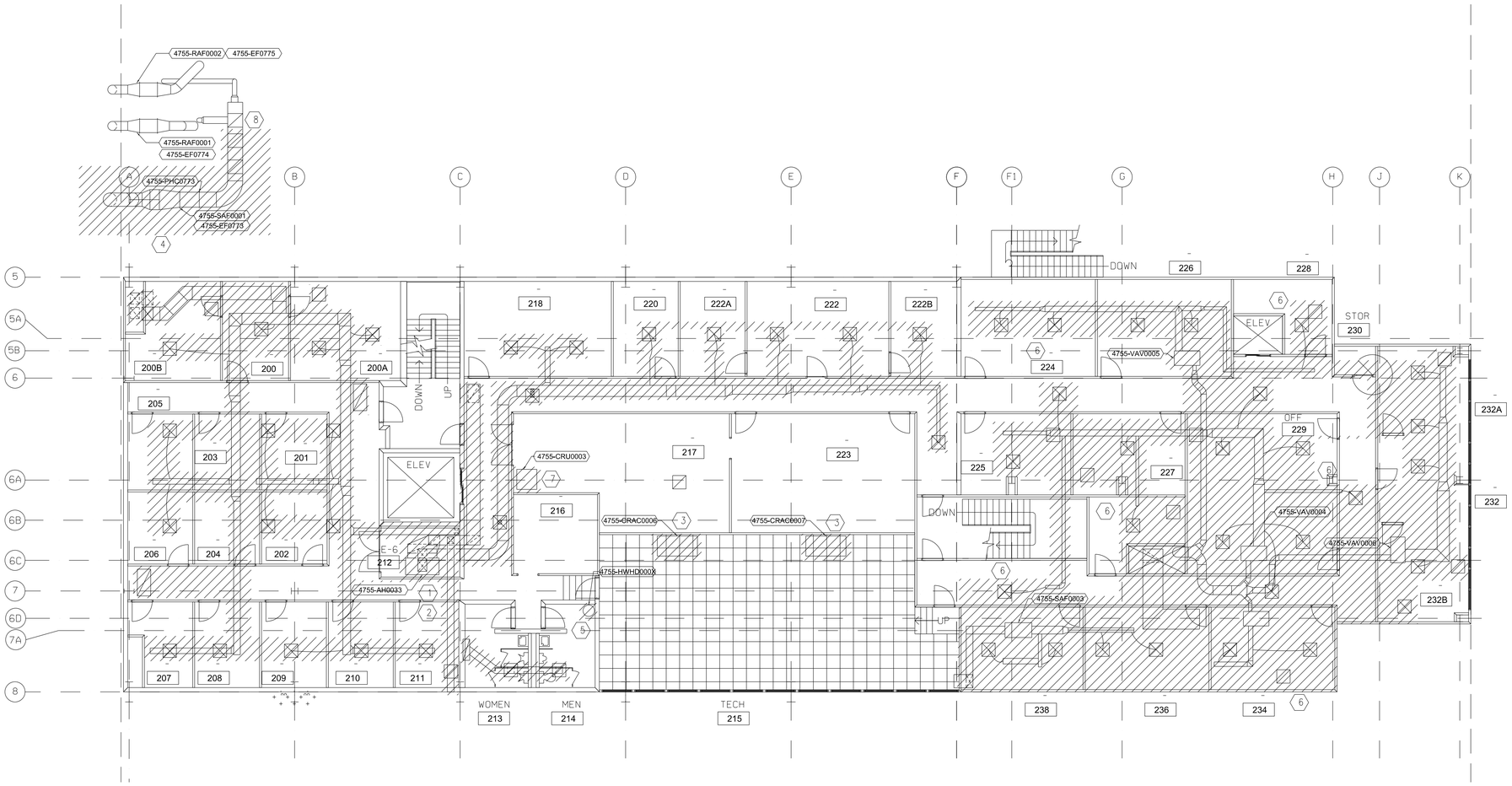

HVAC SECOND FLOOR DEMOLITION PLAN – AREA "B"

SCALE: 1/8" = 1'-0"

1 M104

GENERAL NOTES:

1. REFER TO SHEET M-001 FOR GENERAL NOTES APPLYING TO ALL MECHANICAL SHEETS.

2. ADD ALTERNATIVE #1 – REPLACE EXISTING CHILLED WATER AND HEATING HOT WATER PIPING WITH ALL NEW PIPING. EXCEPT NEWLY INSTALLED HEATING HOT WATER RUNOUTS TO HIGH BAY AIR HANDLERS. IF ADD ALTERNATIVE #1 IS NOT SELECTED, ONLY PIPING BRANCHES TO DEMOLISHED EQUIPMENT SHALL BE DEMOLISHED.

3. ADD ALTERNATIVE #2 – REPLACE ALL WATER CLOSETS, URINALS, SELECTED LAVATORIES SHOWN, WITH NEW FIXTURES AND REPLACE ALL LAVATORY FAUCETS. REMOVE ALL DOMESTIC HOT WATER HEATERS AND REPLACE WITH A SINGLE UNIT LOCATED ON THE 4TH FLOOR. REMOVE ALL HOT WATER PIPING AND REPLACE WITH NEW PIPING. ADD A HOT WATER RECIRCULATION PUMP AND ASSOCIATED HOT WATER RECIRCULATION PIPING.

DEMOLITION NOTES:

1. REMOVE EXISTING AIR HANDLERS AND DUCTWORK.
2. REMOVE EXISTING HEATING AND CHILLED WATER PIPING.
3. EXISTING COMPUTER ROOM UNIT TO BE REMOVED BY OTHER. CONTRACTOR SHALL REMOVE ALL PIPING CONNECTION BACK TO BRANCH TAKEOFF.
4. EXISTING FANS & DUCTWORK TO REMAIN, EXCEPT HATCHED AREA. REMOVE COIL AND DUCTWORK THROUGH WALL. COORDINATE WITH SIDING CONTRACTOR.
5. EXISTING HOT WATER HEATER TO BE REMOVED UNDER ADD ALTERNATE #2.
6. EXISTING DUCTWORK, VAV BOXES, AND AIR TERMINALS TO BE REMOVED.
7. EXISTING COMPUTER ROOM UNITS TO BE REMOVED BY OTHERS.
8. DEMO MAKE-UP AIR TO THIS POINT AND PROVIDE 1/2"X1/2" WIRE MESH SCREENS OVER MAKE-UP AIR INLETS.

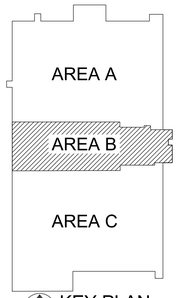

KEY PLAN
NOT TO SCALE

ALABAMA LICENSED NO. 25590 PROFESSIONAL ENGINEER DESIDERIO HERNANDEZ

WARNING
DO NOT SCALE THIS DRAWING
THIS DRAWING WAS DESIGNED TO BE PRINTED AT A NASA SHEET SIZE: MSFC STD. SIZE 40" X 28"

REV.	BY	DATE	REVISION	C.I. NO.	APPROVED

Marshall Space Flight Center
Huntsville, Alabama 35812

REVITALIZE BUILDING
MECHANICAL SYSTEMS (4755)
HVAC SECOND FLOOR DEMOLITION PLAN - AREA "B"

8 6 4 2 0 16 FEET
7 5 3 1 8
SCALE: 1/8" = 1'-0"

AE FIRM: GOODWYN | MILLS | CAWOOD — MERRICK & COMPANY — JOINT VENTURE

NASA AE CONTRACT NO. NASA- NNM12AA49C NNM12AA68T

SUBMITTED: JENNIFER LANDRY
APPROVAL RECOMMENDED: ANDY ROLAND, AS22 PROJECT A/E
APPROVED: JIMMY GUARIN, AS22 GROUP LEAD, DATE:
AE: DATE: 02/28/2014
DESIGNED J.MATTHEWS
DRAWN J.MATTHEWS
CHECKED D.HERNANDEZ
SCALE: 1/8"=1'-0"
APPROVAL RECOMMENDED: ANDY ROLAND, AS22 SUPPORT A/E
APPROVAL RECOMMENDED: NELSON OLINGER, AS22 TEAM LEAD
SPEC. NO. FAC M5057

DRAWING NO. FAC-DA-4755-M104
SHEET __ OF __

FINAL SUBMITTAL
ISSUED FOR CONSTRUCTION

SIGNATURES ON INDEX SHEET INDICATE ACCEPTANCE OF THIS SHEET

REF. NO. M104
10 OF 37

MSFC-FORM 232 REV. 8-2-1-89-RCL

M104.dwg

MSFC Master Bid Disk 03-26-2014

GENERAL NOTES:

1. REFER TO SHEET M-001 FOR GENERAL NOTES APPLYING TO ALL MECHANICAL SHEETS.

2. ADD ALTERNATIVE #1 – REPLACE EXISTING CHILLED WATER AND HEATING HOT WATER PIPING WITH ALL NEW PIPING. EXCEPT NEWLY INSTALLED HEATING HOT WATER RUNOUTS TO HIGH BAY AIR HANDLERS. IF ADD ALTERNATIVE #1 IS NOT SELECTED, ONLY PIPING BRANCHES TO DEMOLISHED EQUIPMENT SHALL BE DEMOLISHED.

3. ADD ALTERNATIVE #2 – REPLACE ALL WATER CLOSETS, URINALS, SELECTED LAVATORIES SHOWN, WITH NEW FIXTURES AND REPLACE ALL LAVATORY FAUCETS. REMOVE ALL DOMESTIC HOT WATER HEATERS AND REPLACE WITH A SINGLE UNIT LOCATED ON THE 4TH FLOOR. REMOVE ALL HOT WATER PIPING AND REPLACE WITH NEW PIPING. ADD A HOT WATER RECIRCULATION PUMP AND ASSOCIATED HOT WATER RECIRCULATION PIPING.

DEMOLITION NOTES:

1. REMOVE EXISTING AIR HANDLERS AND DUCTWORK.
2. REMOVE EXISTING HEATING AND CHILLED WATER PIPING.
3. EXISTING AIR HANDLER, DUCTWORK, AIR TERMINALS, AND REFRIGERANT PIPING TO BE REMOVED.
4. REMOVE EXISTING DUCTWORK AND AIR TERMINALS.
5. EXISTING CRU TO REMAIN.
6. IF ADD ALTERNATE #2 IS SELECTED, EXISTING HOT WATER HEATER TO BE REMOVED.

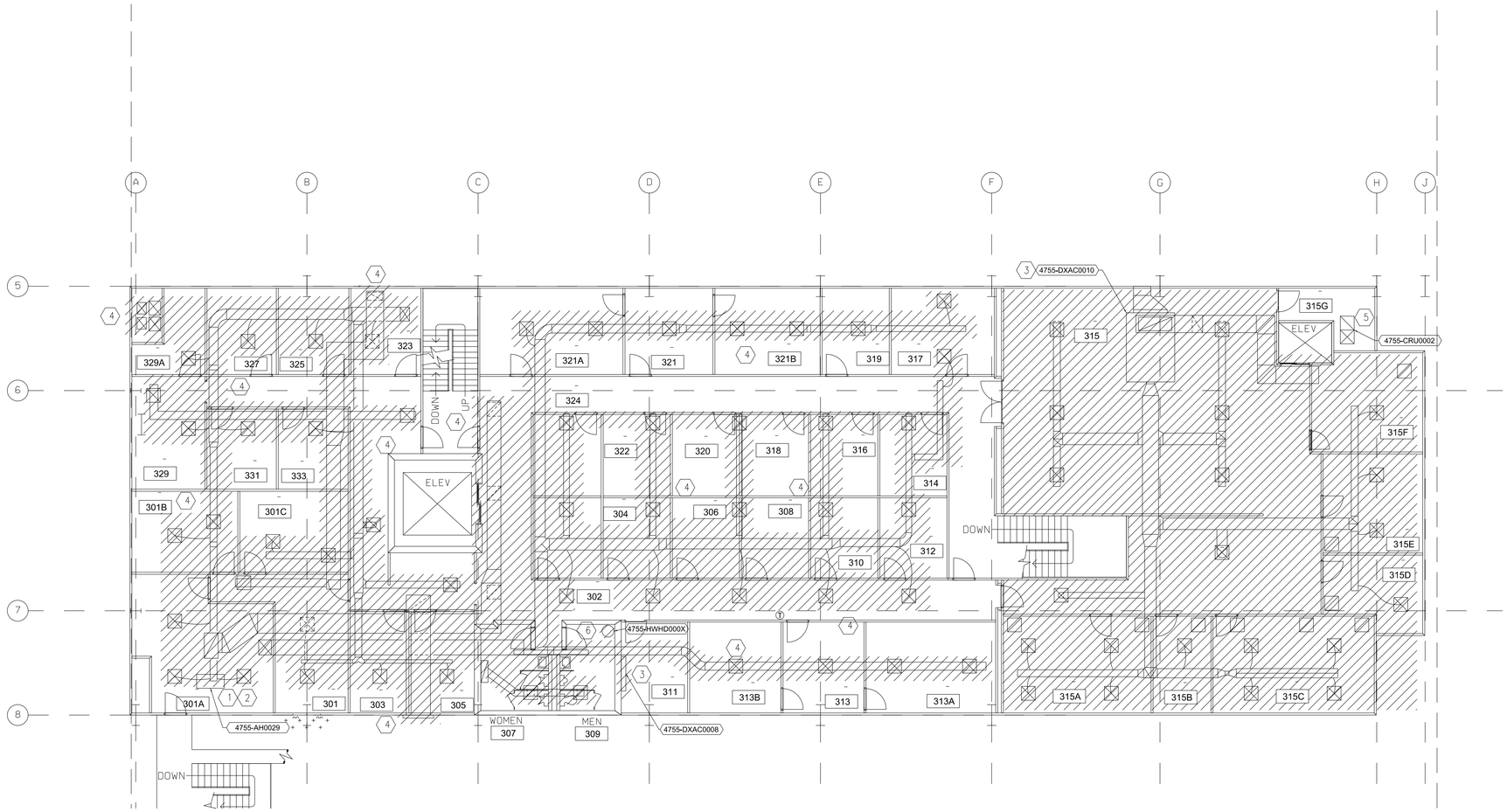

HVAC THIRD FLOOR DEMOLTION PLAN – AREA "B"

SCALE: 1/8" = 1'-0"

1 M105

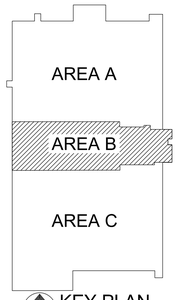

KEY PLAN
NOT TO SCALE

ALABAMA LICENSED NO. 25590 PROFESSIONAL ENGINEER DESIDERIO HERNANDEZ

WARNING
DO NOT SCALE THIS DRAWING
THIS DRAWING WAS DESIGNED TO BE PRINTED AT A NASA SHEET SIZE: MSFC STD. SIZE 40" X 28"

REV.	BY	DATE	REVISION	C.I. NO.	APPROVED

Marshall Space Flight Center
Huntsville, Alabama 35812

REVITALIZE BUILDING
MECHANICAL SYSTEMS (4755)
THIRD FLOOR DEMOLITION PLAN - AREA "B"

8 6 4 2 0 16 FEET
7 5 3 1 8
SCALE: 1/8" = 1'-0"

AE FIRM: GOODWYN | MILLS | CAWOOD MERRICK & COMPANY JOINT VENTURE

NASA AE CONTRACT NO. NASA- NNM12AA49C NNM12AA68T

SUBMITTED: JENNIFER LANDRY
APPROVAL RECOMMENDED: ANDY ROLAND AS22 PROJECT A/E
APPROVED: JIMMY GUARIN
AE: DATE: 02/28/2014
DESIGNED J.MATTHEWS
DRAWN J.MATTHEWS
CHECKED D.HERNANDEZ
SCALE: 1/8"=1'-0"
APPROVAL RECOMMENDED: ANDY ROLAND AS22 SUPPORT A/E
APPROVAL RECOMMENDED: NELSON OLINGER AS22 TEAM LEAD
SPEC. NO. FAC M5057
AS22 GROUP LEAD DATE:

FINAL SUBMITTAL
ISSUED FOR CONSTRUCTION

SIGNATURES ON INDEX SHEET INDICATE ACCEPTANCE OF THIS SHEET

REF. NO. 11 OF 37 M105

DRAWING NO. FAC-DA-4755-M105
SHEET __ OF __

MSFC-FORM 232 REV. 8-21-89-RCL

M105.dwg

MSFC Master Bid Disk 03-26-2014

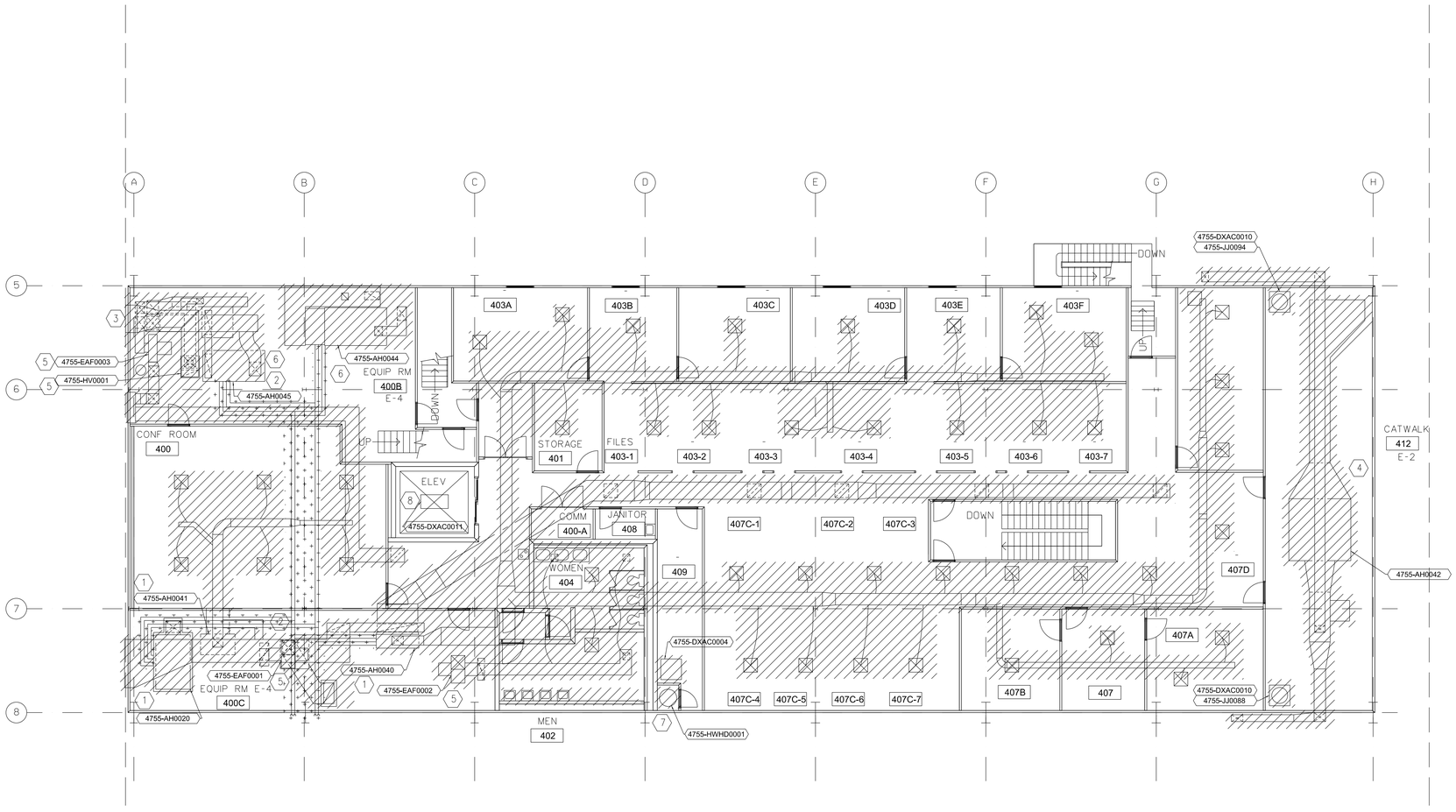

HVAC FOURTH FLOOR DEMOLTION PLAN – AREA "B"

SCALE: 1/8" = 1'-0"

1 M106

GENERAL NOTES:

1. REFER TO SHEET M-001 FOR GENERAL NOTES APPLYING TO ALL MECHANICAL SHEETS.
2. ADD ALTERNATIVE #1 – REPLACE EXISTING CHILLED WATER AND HEATING HOT WATER PIPING WITH ALL NEW PIPING. EXCEPT NEWLY INSTALLED HEATING HOT WATER RUNOUTS TO HIGH BAY AIR HANDLERS. IF ADD ALTERNATIVE #1 IS NOT SELECTED, ONLY PIPING BRANCHES TO DEMOLISHED EQUIPMENT SHALL BE DEMOLISHED.
3. ADD ALTERNATIVE #2 – REPLACE ALL WATER CLOSETS, URINALS, SELECTED LAVATORIES SHOWN, WITH NEW FIXTURES AND REPLACE ALL LAVATORY FAUCETS. REMOVE ALL DOMESTIC HOT WATER HEATERS AND REPLACE WITH A SINGLE UNIT LOCATED ON THE 4TH FLOOR. REMOVE ALL HOT WATER PIPING AND REPLACE WITH NEW PIPING. ADD A HOT WATER RECIRCULATION PUMP AND ASSOCIATED HOT WATER RECIRCULATION PIPING.

DEMOLITION NOTES:

1. REMOVE EXISTING AIR HANDLERS.
2. REMOVE EXISTING HEATING AND CHILLED WATER PIPING.
3. BLANK OFF LOUVERS.
4. EXISTING UNIT, PIPING, AND DUCTWORK IS INSULATED WITH ASBESTOS CONTAINING INSULATION. CONTRACTOR SHALL ABATE ASBESTOS IN ACCORDANCE WITH ALL APPLICABLE FEDERAL, STATE, AND LOCAL REQUIREMENTS, INCLUDING OSHA.
5. EXISTING FAN TO BE REMOVED.
6. EXISTING AHU-44 & AHU-45 TO BE REMOVED AND TURNED BACK TO INTO THE GOVERNMENT.
7. IF SELECTED, ADD ALTERNATE #2, EXISTING WATER HEATER TO BE REMOVED AND PLUMBING FIXTURES AS INDICATED ON P102.
8. EXISTING DX PACKAGED UNIT TO REMAIN. EXISTING DXAC-11 IS LOCATED ABOVE ELEVATOR PENTHOUSE. THIS UNIT SERVES THE ELEVATOR MACHINE ROOM.

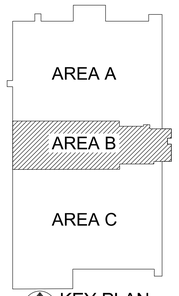

KEY PLAN
NOT TO SCALE

ALABAMA LICENSED NO. 25590 PROFESSIONAL ENGINEER DESIDERIO HERNANDEZ

WARNING
DO NOT SCALE THIS DRAWING
THIS DRAWING WAS DESIGNED TO BE PRINTED AT A NASA SHEET SIZE: MSFC STD. SIZE 40" X 28"

REV.	BY	DATE	REVISION	C.I. NO.	APPROVED

Marshall Space Flight Center
Huntsville, Alabama 35812

REVITALIZE BUILDING
MECHANICAL SYSTEMS (4755)
HVAC FOURTH FLOOR DEMOLITION PLAN - AREA "B"

8 6 4 2 0 16 FEET
7 5 3 1 8
SCALE: 1/8" = 1'-0"

FINAL SUBMITTAL
ISSUED FOR CONSTRUCTION

SIGNATURES ON INDEX SHEET INDICATE ACCEPTANCE OF THIS SHEET

REF. NO. 12 OF 37 **M106**

AE FIRM:

NASA AE CONTRACT NO. NASA- NNM12AA49C NNM12AA68T

SUBMITTED: JENNIFER LANDRY
APPROVAL RECOMMENDED: ANDY ROLAND AS22 PROJECT A/E
APPROVED: JIMMY GUARIN

AE: DATE: 02/28/2014
APPROVAL RECOMMENDED: ANDY ROLAND AS22 SUPPORT A/E
AS22 GROUP LEAD DATE:

DESIGNED J.MATTHEWS
DRAWN J.MATTHEWS
CHECKED D.HERNANDEZ
APPROVAL RECOMMENDED: NELSON OLINGER AS22 TEAM LEAD

SCALE: 1/8"=1'-0"
SPEC. NO. FAC M5057

DRAWING NO. FAC-DA-4755-M106
SHEET __ OF __

MSFC-FORM 232 REV. 8-21-89-RCL

MSFC Master Bid Disk 03-26-2014

GENERAL NOTES:

1. REFER TO SHEET M-001 FOR GENERAL NOTES APPLYING TO ALL MECHANICAL SHEETS.
2. ADD ALTERNATIVE #1 – REPLACE EXISTING CHILLED WATER AND HEATING HOT WATER PIPING WITH ALL NEW PIPING. EXCEPT NEWLY INSTALLED HEATING HOT WATER RUNOUTS TO HIGH BAY AIR HANDLERS. IF ADD ALTERNATIVE #1 IS NOT SELECTED, ONLY PIPING BRANCHES TO DEMOLISHED EQUIPMENT SHALL BE DEMOLISHED.
3. ADD ALTERNATIVE #2 – REPLACE ALL WATER CLOSETS, URINALS, SELECTED LAVATORIES SHOWN, WITH NEW FIXTURES AND REPLACE ALL LAVATORY FAUCETS. REMOVE ALL DOMESTIC HOT WATER HEATERS AND REPLACE WITH A SINGLE UNIT LOCATED ON THE 4TH FLOOR. REMOVE ALL HOT WATER PIPING AND REPLACE WITH NEW PIPING. ADD A HOT WATER RECIRCULATION PUMP AND ASSOCIATED HOT WATER RECIRCULATION PIPING.

KEYED NOTES:

1. PROVIDE BALANCING DAMPERS ON NECK OF EACH SUPPLY DIFFUSER RUNOUT.

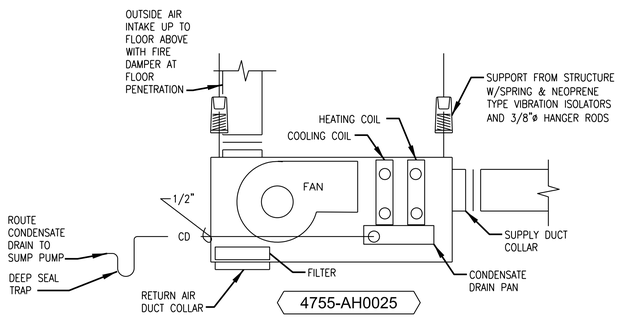

4755-AH0025 – AIR HANDLING UNIT SIDE DETAIL (2 / M-200)

NO SCALE

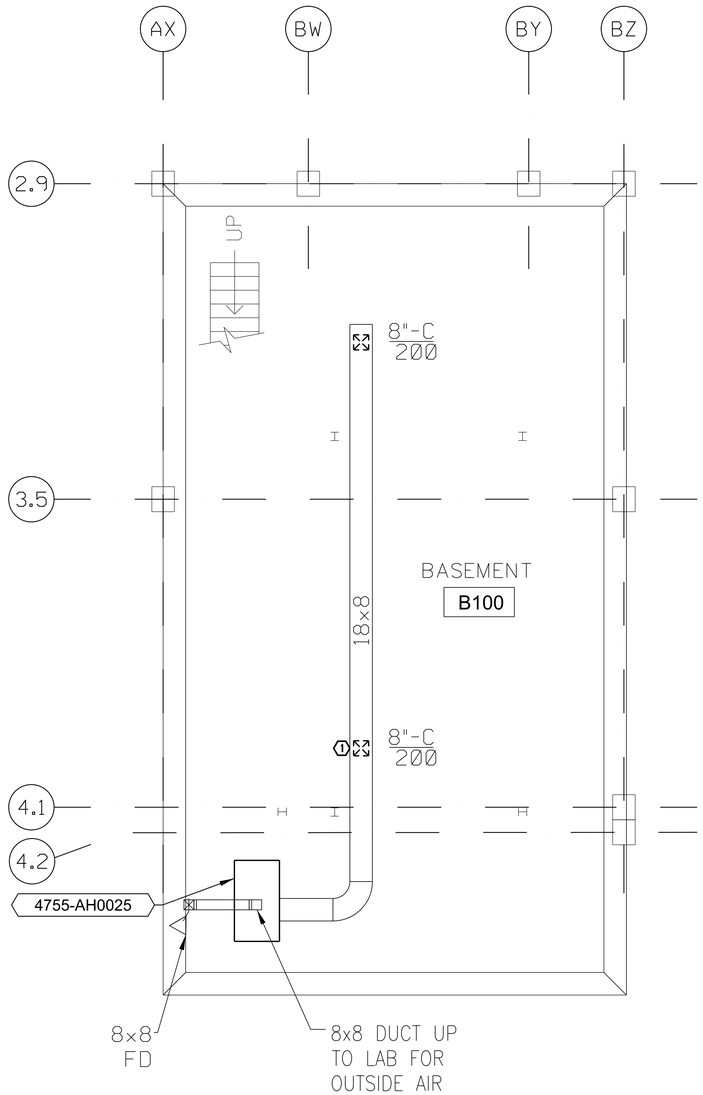

HVAC BASEMENT NEW WORK PLAN (1 / M200)

SCALE: 1/8" = 1'-0"

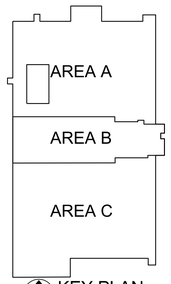

KEY PLAN
NOT TO SCALE

ALABAMA LICENSED NO. 25590 PROFESSIONAL ENGINEER DESIDERIO HERNANDEZ

WARNING
DO NOT SCALE THIS DRAWING
THIS DRAWING WAS DESIGNED TO BE PRINTED AT A NASA SHEET SIZE: MSFC STD. SIZE 40" X 28"

REV	BY	DATE	REVISION	C.I. NO.	APPROVED

Marshall Space Flight Center
Huntsville, Alabama 35812

REVITALIZE BUILDING
MECHANICAL SYSTEMS (4755)
HVAC BASEMENT NEW WORK PLAN

4 3 2 1 0 4 8 FEET
SCALE: 1/4" = 1'-0"

FINAL SUBMITTAL
ISSUED FOR CONSTRUCTION

SIGNATURES ON INDEX SHEET INDICATE ACCEPTANCE OF THIS SHEET

REF. NO. 13 OF 37 M200

AE FIRM: GOODWYN | MILLS | CAWOOD — MERRICK & COMPANY — JOINT VENTURE

NASA AE CONTRACT NO. NASA- NNM12AA49C NNM12AA68T

SUBMITTED: JENNIFER LANDRY
APPROVAL RECOMMENDED: ANDY ROLAND, AS22 PROJECT A/E
APPROVED: JIMMY GUARIN
AE: DATE: 11/04/13
APPROVAL RECOMMENDED: ANDY ROLAND, AS22 SUPPORT A/E
AS22 GROUP LEAD DATE:
DESIGNED J.MATTHEWS
DRAWN J.MATTHEWS
CHECKED D.HERNANDEZ
APPROVAL RECOMMENDED: NELSON OLINGER, AS22 TEAM LEAD
DRAWING NO. FAC-DA-4755-M200
SCALE: 1/8"=1'-0"
SPEC. NO. FAC M5057
SHEET __ OF __

MSFC-FORM 232 REV.: 8-21-89-RCL

MSFC Master Bid Disk 03-26-2014

GENERAL NOTES:

1. REFER TO SHEET M-001 FOR GENERAL NOTES APPLYING TO ALL MECHANICAL SHEETS.
2. ADD ALTERNATIVE #1 – REPLACE EXISTING CHILLED WATER AND HEATING HOT WATER PIPING WITH ALL NEW PIPING. EXCEPT NEWLY INSTALLED HEATING HOT WATER RUNOUTS TO HIGH BAY AIR HANDLERS. IF ADD ALTERNATIVE #1 IS NOT SELECTED, ONLY PIPING BRANCHES TO DEMOLISHED EQUIPMENT SHALL BE DEMOLISHED.
3. ADD ALTERNATIVE #2 – REPLACE ALL WATER CLOSETS, URINALS, SELECTED LAVATORIES SHOWN, WITH NEW FIXTURES AND REPLACE ALL LAVATORY FAUCETS. REMOVE ALL DOMESTIC HOT WATER HEATERS AND REPLACE WITH A SINGLE UNIT LOCATED ON THE 4TH FLOOR. REMOVE ALL HOT WATER PIPING AND REPLACE WITH NEW PIPING. ADD A HOT WATER RECIRCULATION PUMP AND ASSOCIATED HOT WATER RECIRCULATION PIPING.

KEYED NOTES:

1. MINI-SPLIT DUCTLESS AC UNIT CONDENSING UNIT, ROUTE REFRIGERANT LINES UP TO DXAC-1, IN ROOM 400A ON FOURTH FLOOR, SEE SHEET M-206.
2. EXISTING CRU-01, PROVIDE NEW 1" CHWS & R PIPING TAPS FOR FUTURE CONNECTION TO CHILLED WATER SYSTEM. CAP PIPING OFF AT END, PROVIDE SHUT-OFF VALVES.
3. SERVED BY EXISTING SYSTEM.
4. SEE DETAIL 4/M-502 (TYP).
5. PROVIDE DOOR SWITCH TO TIE INTO UCS.

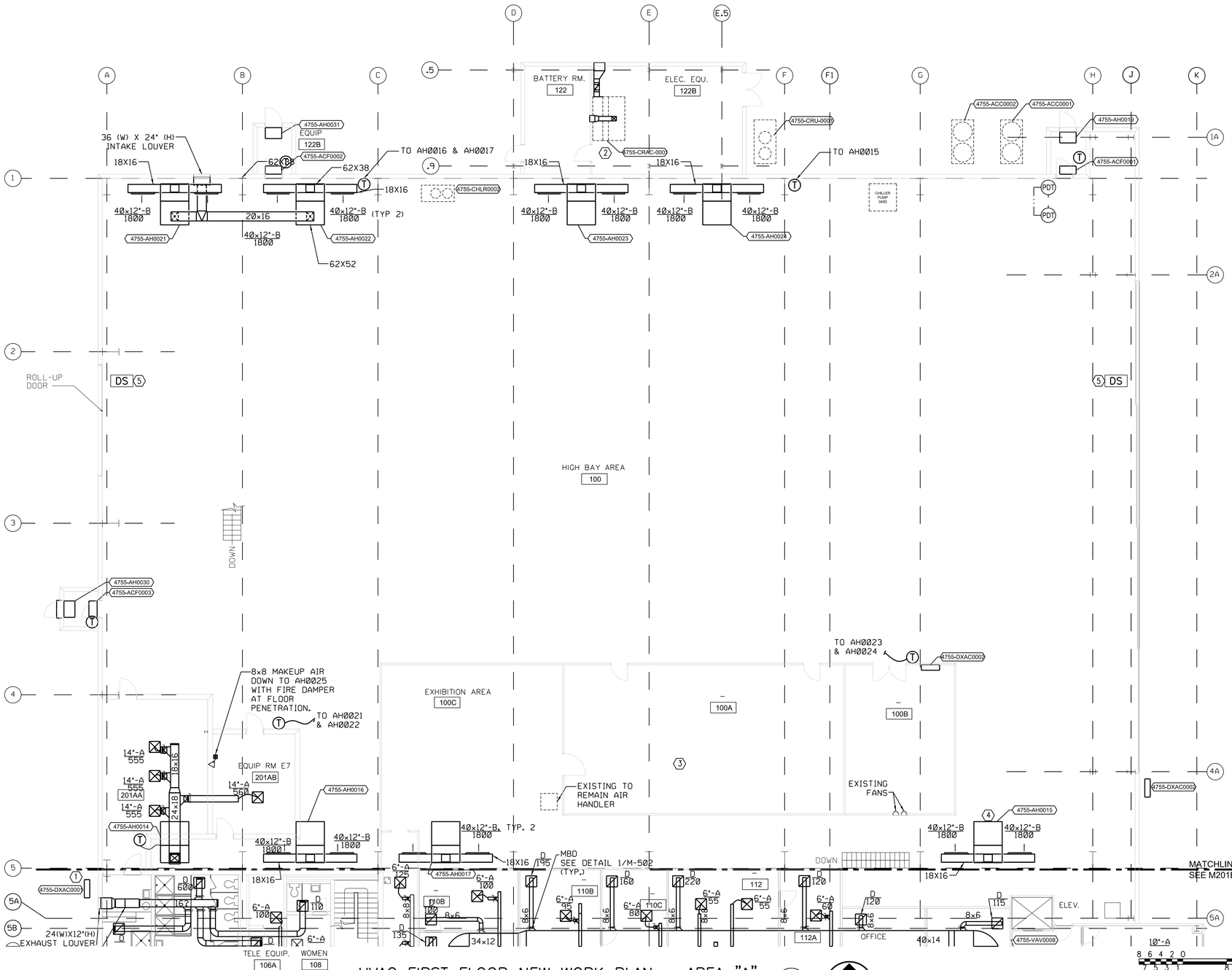

HVAC FIRST FLOOR NEW WORK PLAN – AREA "A"

SCALE: 1/8" = 1'-0"

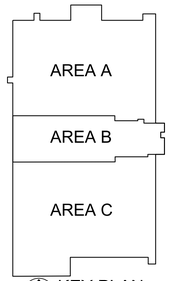

KEY PLAN
NOT TO SCALE

ALABAMA LICENSED NO. 25590 PROFESSIONAL ENGINEER DESIDERIO HERNANDEZ

WARNING
DO NOT SCALE THIS DRAWING
THIS DRAWING WAS DESIGNED TO BE PRINTED AT A NASA SHEET SIZE: MSFC STD. SIZE 40" X 28"

REV.	BY	DATE	REVISION	C.I. NO.	APPROVED

Marshall Space Flight Center
Huntsville, Alabama 35812

REVITALIZE BUILDING
MECHANICAL SYSTEMS (4755)
HVAC FIRST FLOOR NEW WORK PLAN - AREA "A"

AE FIRM: GOODWYN MILLS CAWOOD / MERRICK & COMPANY — JOINT VENTURE

NASA AE CONTRACT NO. NASA- NNM12AA49C NNM12AA68T

SUBMITTED: JENNIFER LANDRY
AE: DATE: 11/04/13
DESIGNED J.MATTHEWS
DRAWN J.MATTHEWS
CHECKED D.HERNANDEZ
SCALE: 1/8"=1'-0"

APPROVAL RECOMMENDED: ANDY ROLAND, A522 PROJECT A/E
APPROVAL RECOMMENDED: ANDY ROLAND, A522 SUPPORT A/E
APPROVAL RECOMMENDED: NELSON OLINGER, A522 TEAM LEAD
SPEC. NO. FAC: M5057

APPROVED: JIMMY GUARIN, A522 GROUP LEAD DATE:

DRAWING NO. FAC-DA-4755-M201
SHEET __ OF __

FINAL SUBMITTAL
ISSUED FOR CONSTRUCTION

SIGNATURES ON INDEX SHEET INDICATE ACCEPTANCE OF THIS SHEET

REF. NO. 14 OF 37 M201

MSFC-FORM 232 REV. 8-21-89-RCL

MSFC Master Bid Disk 03-26-2014

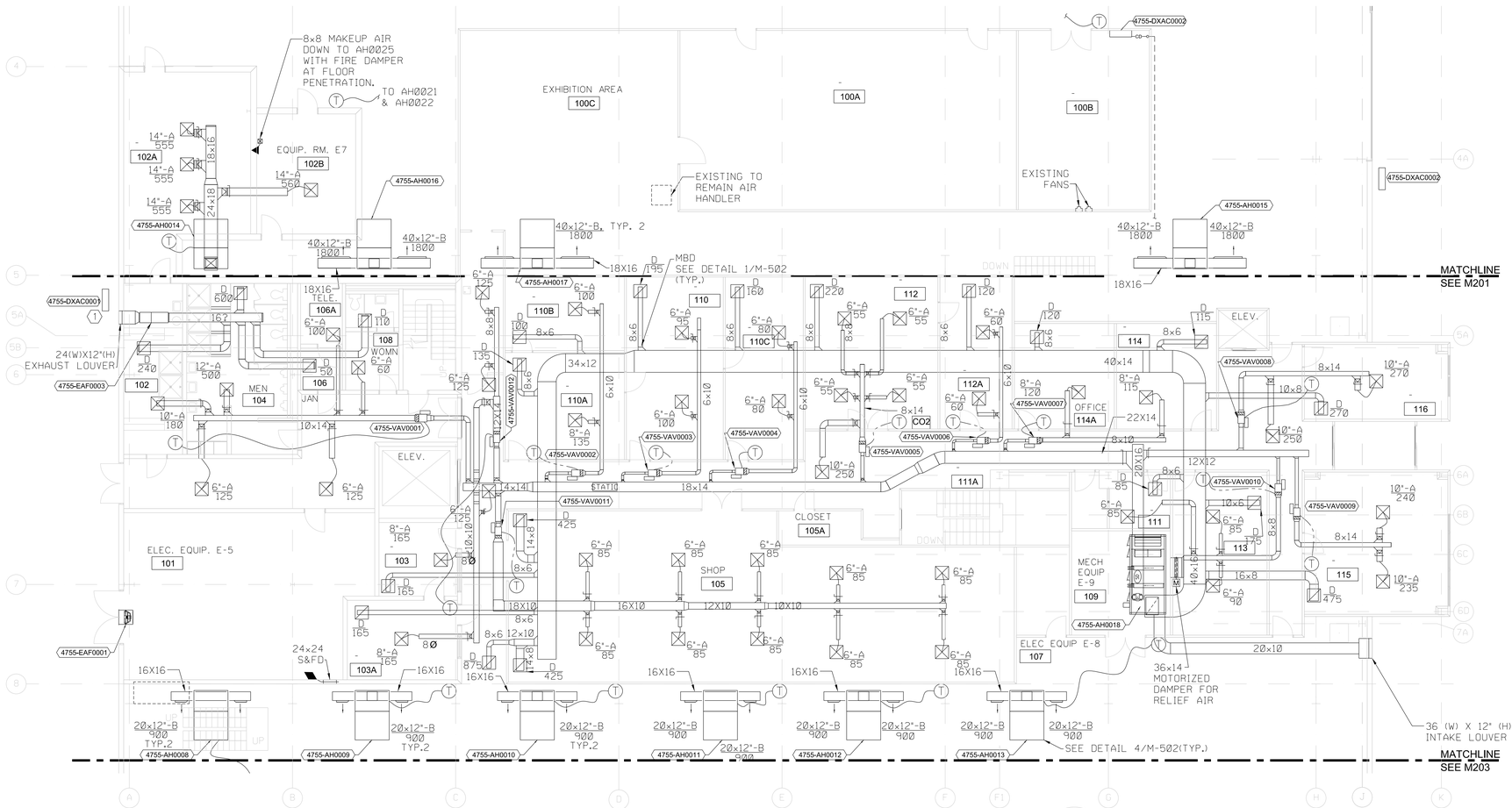

HVAC FIRST FLOOR NEW WORK PLAN – AREA "B"

SCALE: 1/8" = 1'-0"

1 / M202

GENERAL NOTES:

1. REFER TO SHEET M-001 FOR GENERAL NOTES APPLYING TO ALL MECHANICAL SHEETS.
2. ADD ALTERNATIVE #1 – REPLACE EXISTING CHILLED WATER AND HEATING HOT WATER PIPING WITH ALL NEW PIPING. EXCEPT NEWLY INSTALLED HEATING HOT WATER RUNOUTS TO HIGH BAY AIR HANDLERS. IF ADD ALTERNATIVE #1 IS NOT SELECTED, ONLY PIPING BRANCHES TO DEMOLISHED EQUIPMENT SHALL BE DEMOLISHED.
3. ADD ALTERNATIVE #2 – REPLACE ALL WATER CLOSETS, URINALS, SELECTED LAVATORIES SHOWN, WITH NEW FIXTURES AND REPLACE ALL LAVATORY FAUCETS. REMOVE ALL DOMESTIC HOT WATER HEATERS AND REPLACE WITH A SINGLE UNIT LOCATED ON THE 4TH FLOOR. REMOVE ALL HOT WATER PIPING AND REPLACE WITH NEW PIPING. ADD A HOT WATER RECIRCULATION PUMP AND ASSOCIATED HOT WATER RECIRCULATION PIPING.

KEYED NOTES:

1. MINI-SPLIT DUCTLESS AC UNIT CONDENSING UNIT, ROUTE REFRIGERANT LINES UP TO DXAC-1, IN ROOM 400A ON FOURTH FLOOR, SEE SHEET M-206.

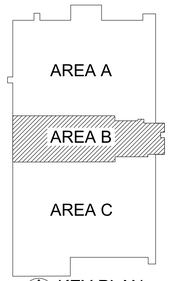

KEY PLAN
NOT TO SCALE

ALABAMA LICENSED NO. 25590 PROFESSIONAL ENGINEER DESIDERIO HERNANDEZ

WARNING
DO NOT SCALE THIS DRAWING
THIS DRAWING WAS DESIGNED TO BE PRINTED AT A NASA SHEET SIZE: MSFC STD. SIZE 40" X 28"

REV.	AC	DATE	REVISION	CL	DR	APPROVED

Marshall Space Flight Center
Huntsville, Alabama 35812

REVITALIZE BUILDING
MECHANICAL SYSTEMS (4755)
HVAC FIRST FLOOR NEW WORK PLAN - AREA "B"

8 6 4 2 0 16 FEET
7 5 3 1 8
SCALE: 1/8" = 1'-0"

AE FIRM: GOODWYN | MILLS | CAWOOD — MERRICK & COMPANY — JOINT VENTURE

NASA AE CONTRACT NO. NASA- NNM12AA49C NNM12AA68T

JENNIFER LANDRY	ANDY ROLAND (ASC2 PROJECT AE)	APPROVED: JIMMY GUARIN	
AE: DATE: 02/28/2014	ANDY ROLAND (ASC2 SUPPORT AE)	ASC2 GROUP LEAD DATE:	
DESIGNED: J.MATTHEWS	NELSON OLINGER (ASC2 TEAM LEAD)	DRAWING NO.	
DRAWN: J.MATTHEWS		FAC-DA-4755-M202	
CHECKED: D.HERNANDEZ			
SCALE: 1/8"=1'-0"	SPEC. NO. FAC: M5057	SHEET __ OF __	

FINAL SUBMITTAL
ISSUED FOR CONSTRUCTION

SIGNATURES ON INDEX SHEET INDICATE ACCEPTANCE OF THIS SHEET

REF. NO. 15 OF 37 M202

MSFC-FORM 232 REV. 8-21-89-RCL

MSFC Master Bid Disk 03-26-2014

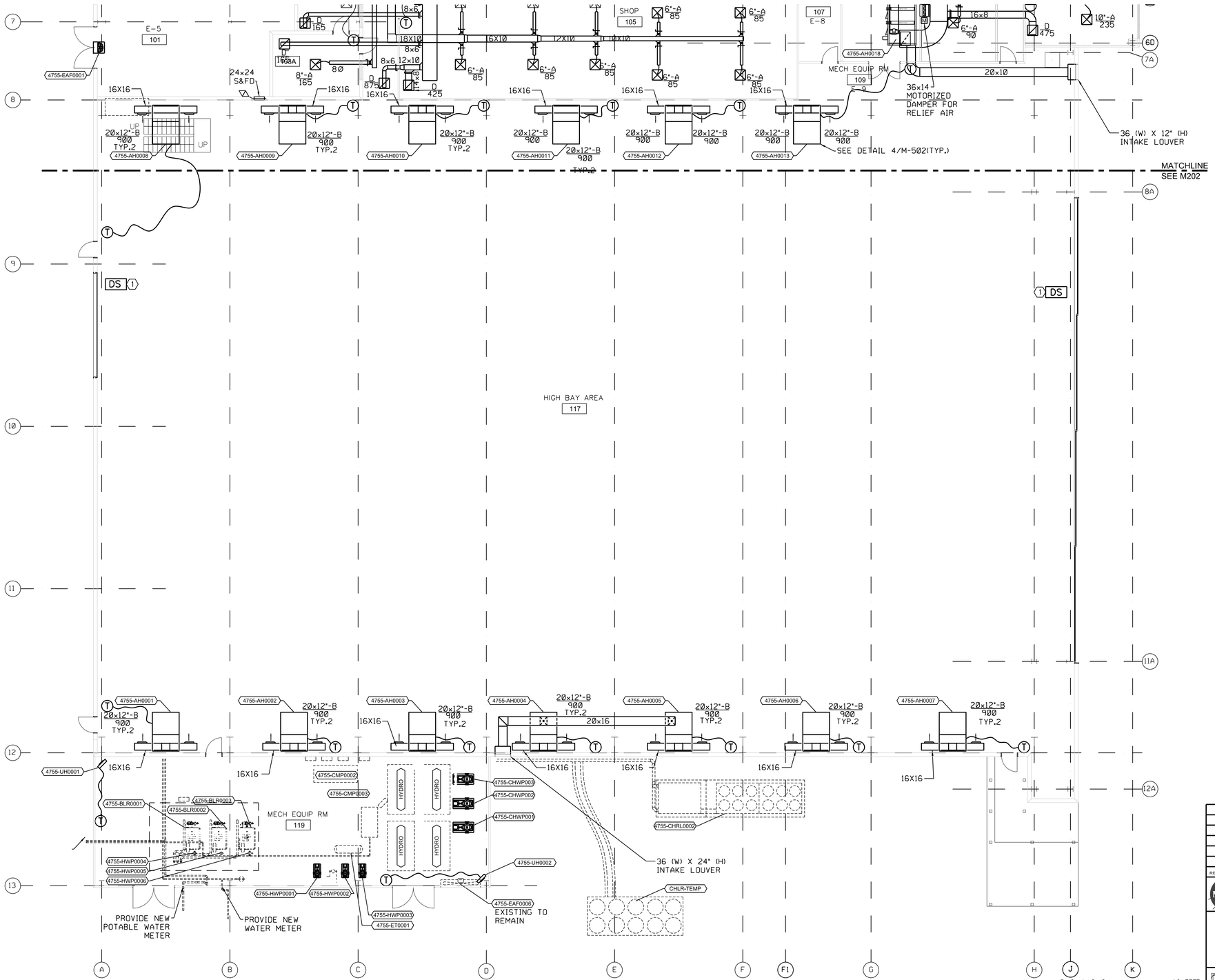

HVAC FIRST FLOOR NEW WORK PLAN – AREA "C"

SCALE: 1/8" = 1'-0"

1 M203

GENERAL NOTES:

1. REFER TO SHEET M-001 FOR GENERAL NOTES APPLYING TO ALL MECHANICAL SHEETS.
2. ADD ALTERNATIVE #1 – REPLACE EXISTING CHILLED WATER AND HEATING HOT WATER PIPING WITH ALL NEW PIPING. EXCEPT NEWLY INSTALLED HEATING HOT WATER RUNOUTS TO HIGH BAY AIR HANDLERS. IF ADD ALTERNATIVE #1 IS NOT SELECTED, ONLY PIPING BRANCHES TO DEMOLISHED EQUIPMENT SHALL BE DEMOLISHED.
3. ADD ALTERNATIVE #2 – REPLACE ALL WATER CLOSETS, URINALS, SELECTED LAVATORIES SHOWN, WITH NEW FIXTURES AND REPLACE ALL LAVATORY FAUCETS. REMOVE ALL DOMESTIC HOT WATER HEATERS AND REPLACE WITH A SINGLE UNIT LOCATED ON THE 4TH FLOOR. REMOVE ALL HOT WATER PIPING AND REPLACE WITH NEW PIPING. ADD A HOT WATER RECIRCULATION PUMP AND ASSOCIATED HOT WATER RECIRCULATION PIPING.
4. PROVIDE NEW WATER METER FOR INDUSTRIAL WATER (1", FIELD VERIFY SIZE). METER SHALL HAVE CAPABILITY TO TIE INTO UCS. PROVIDE NEW WATER METER FOR POTABLE WATER (4", FIELD VERIFY SIZE). METER SHALL HAVE CAPABILITY TO TIE INTO UCS.

KEYED NOTES:

1. PROVIDE DOOR SWITCH TO TIE INTO UCS.

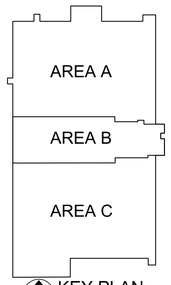

KEY PLAN
NOT TO SCALE

ALABAMA LICENSED NO. 25590 PROFESSIONAL ENGINEER DESIERIO HERNANDEZ

WARNING
DO NOT SCALE THIS DRAWING
THIS DRAWING WAS DESIGNED TO BE PRINTED AT A NASA SHEET SIZE: MSFC STD. SIZE 40" X 28"

REV	BY	DATE	REVISION	C.I. NO.	APPROVED

Marshall Space Flight Center
Huntsville, Alabama 35812

REVITALIZE BUILDING
MECHANICAL SYSTEMS (4755)
HVAC FIRST FLOOR NEW WORK PLAN - AREA "C"

AE FIRM: GOODWYN | MILLS | CAWOOD — MERRICK & COMPANY
JOINT VENTURE

NASA AE CONTRACT NO.
NASA- NNM12AA49C
NNM12AA68T

SUBMITTED: JENNIFER LANDRY
APPROVAL RECOMMENDED: ANDY BOLAND, AS22 PROJECT A/E
APPROVED: JIMMY GUARIN
AE: DATE: 11/04/13
APPROVAL RECOMMENDED: ANDY BOLAND, AS22 SUPPORT A/E
AS22 GROUP LEAD DATE:
DESIGNED J.MATTHEWS
DRAWN J.MATTHEWS
CHECKED D.HERNANDEZ
APPROVAL RECOMMENDED: NELSON OLINGER, AS22 TEAM LEAD
SCALE: 1/8"=1'-0"
SPEC. NO. FAC M5057

DRAWING NO.
FAC-DA-4755-M203
SHEET __ OF __

FINAL SUBMITTAL
ISSUED FOR CONSTRUCTION

SIGNATURES ON INDEX SHEET INDICATE ACCEPTANCE OF THIS SHEET

REF. NO. 16 OF 37
M203

MSFC-FORM 232 REV.: 8-21-89-RCL

MSFC Master Bid Disk 03-26-2014

GENERAL NOTES:

1. REFER TO SHEET M-001 FOR GENERAL NOTES APPLYING TO ALL MECHANICAL SHEETS.

2. ADD ALTERNATIVE #1 – REPLACE EXISTING CHILLED WATER AND HEATING HOT WATER PIPING WITH ALL NEW PIPING. EXCEPT NEWLY INSTALLED HEATING HOT WATER RUNOUTS TO HIGH BAY AIR HANDLERS. IF ADD ALTERNATIVE #1 IS NOT SELECTED, ONLY PIPING BRANCHES TO DEMOLISHED EQUIPMENT SHALL BE DEMOLISHED.

3. ADD ALTERNATIVE #2 – REPLACE ALL WATER CLOSETS, URINALS, SELECTED LAVATORIES SHOWN, WITH NEW FIXTURES AND REPLACE ALL LAVATORY FAUCETS. REMOVE ALL DOMESTIC HOT WATER HEATERS AND REPLACE WITH A SINGLE UNIT LOCATED ON THE 4TH FLOOR. REMOVE ALL HOT WATER PIPING AND REPLACE WITH NEW PIPING. ADD A HOT WATER RECIRCULATION PUMP AND ASSOCIATED HOT WATER RECIRCULATION PIPING.

KEYED NOTES:

1. SUPPLY AND RETURN FED FROM 4755-AH0045 ON 4TH FLOOR ABOVE.

2. FUME HOOD MAKE-UP AIR IS PULLED FROM HIGH BAY AREA, PROVIDE 1/2"X1/2" WIRE MESH SCREENS OVER MAKE-UP AIR INLETS.

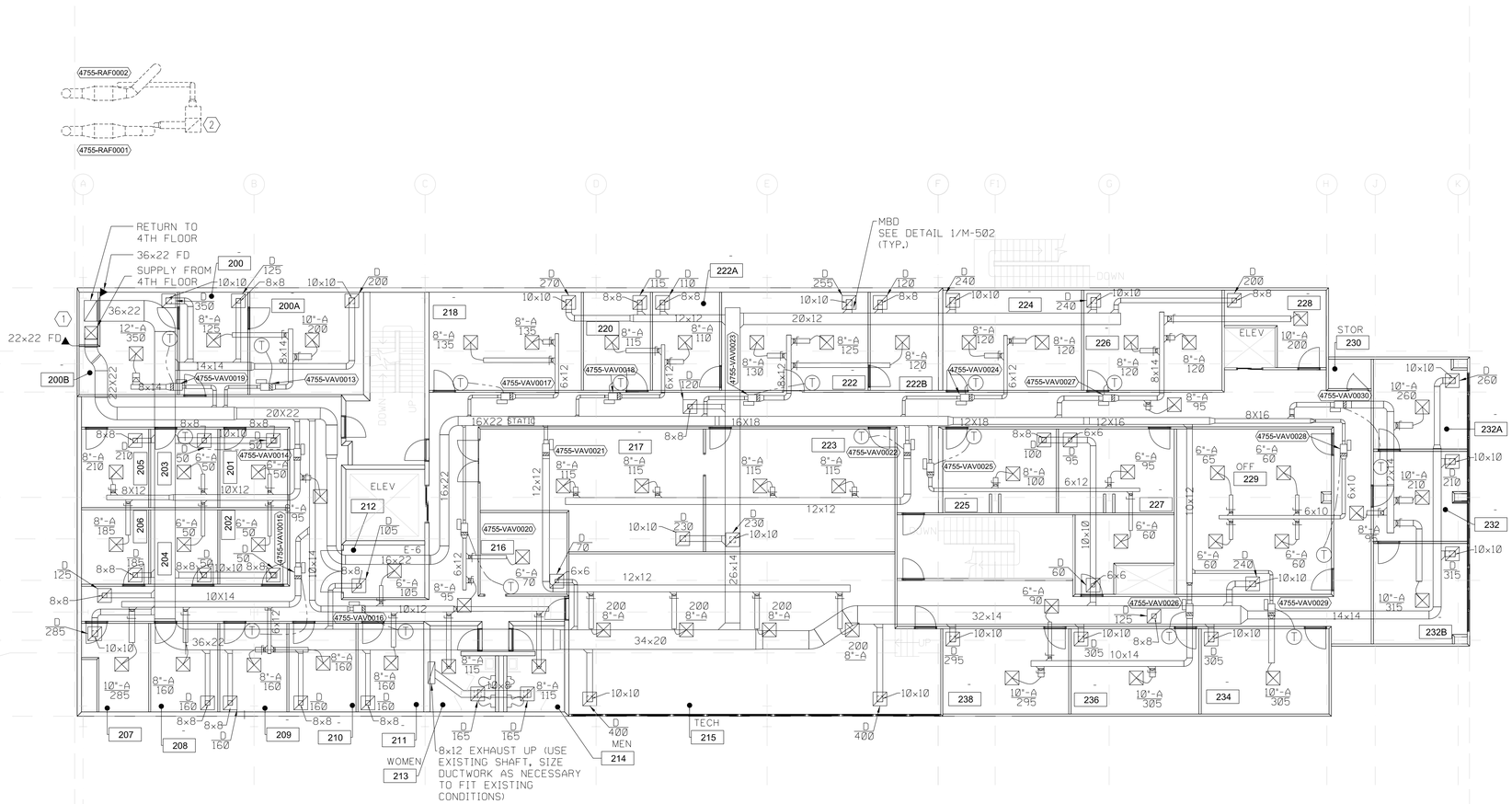

HVAC SECOND FLOOR NEW WORK PLAN – AREA "B"

SCALE: 1/8" = 1'-0"

1 / M204

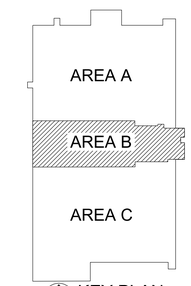

KEY PLAN
NOT TO SCALE

ALABAMA LICENSED NO. 25590 PROFESSIONAL ENGINEER DESIDERIO HERNANDEZ

WARNING
DO NOT SCALE THIS DRAWING
THIS DRAWING WAS DESIGNED TO BE PRINTED AT A NASA SHEET SIZE: MSFC STD. SIZE 40" X 28"

REV	BY	DATE	REVISION	C.I. NO.	APPROVED

Marshall Space Flight Center
Huntsville, Alabama 35812

REVITALIZE BUILDING
MECHANICAL SYSTEMS (4755)

HVAC SECOND FLOOR NEW WORK PLAN - AREA "B"

8 6 4 2 0 16 FEET
7 5 3 1 8
SCALE: 1/8" = 1'-0"

FINAL SUBMITTAL
ISSUED FOR CONSTRUCTION

SIGNATURES ON INDEX SHEET INDICATE ACCEPTANCE OF THIS SHEET

REF. NO.
17 OF 37
M204

AE FIRM: GOODWYN | MILLS | CAWOOD — MERRICK & COMPANY — JOINT VENTURE

NASA AE CONTRACT NO. NASA: NNM12AA49C NNM12AA68T

ARCHITECT: JENNIFER LANDRY		APPROVAL RECOMMENDED: ANDY ROLAND	APPROVED: JIMMY GUARIN
AE:	DATE: 02/28/2014	APPROVAL RECOMMENDED: ANDY ROLAND	A/E/I GROUP LEAD: DATE:
DESIGNED:	J.MATTHEWS		
DRAWN:	J.MATTHEWS	APPROVAL RECOMMENDED: NELSON OLINGER	DRAWING NO. FAC-DA-4755-M204
CHECKED:	D.HERNANDEZ		
SCALE:	1/8"=1'-0"	SPEC. NO. FAC: M5057	SHEET __ OF __

MSFC-FORM 232 REV. 9-21-89-RCL

MSFC Master Bid Disk 03-26-2014

GENERAL NOTES:

1. REFER TO SHEET M-001 FOR GENERAL NOTES APPLYING TO ALL MECHANICAL SHEETS.

2. ADD ALTERNATIVE #1 – REPLACE EXISTING CHILLED WATER AND HEATING HOT WATER PIPING WITH ALL NEW PIPING. EXCEPT NEWLY INSTALLED HEATING HOT WATER RUNOUTS TO HIGH BAY AIR HANDLERS. IF ADD ALTERNATIVE #1 IS NOT SELECTED, ONLY PIPING BRANCHES TO DEMOLISHED EQUIPMENT SHALL BE DEMOLISHED.

3. ADD ALTERNATIVE #2 – REPLACE ALL WATER CLOSETS, URINALS, SELECTED LAVATORIES SHOWN, WITH NEW FIXTURES AND REPLACE ALL LAVATORY FAUCETS. REMOVE ALL DOMESTIC HOT WATER HEATERS AND REPLACE WITH A SINGLE UNIT LOCATED ON THE 4TH FLOOR. REMOVE ALL HOT WATER PIPING AND REPLACE WITH NEW PIPING. ADD A HOT WATER RECIRCULATION PUMP AND ASSOCIATED HOT WATER RECIRCULATION PIPING.

KEYED NOTES:

1. EXISTING CRU-02.
2. SUPPLY AND RETURN FED FROM 4755-AH0045 ON 4TH FLOOR ABOVE.
3. SUPPLY AND RETURN FED FROM 4755-AH0044 ON 4TH FLOOR ABOVE.

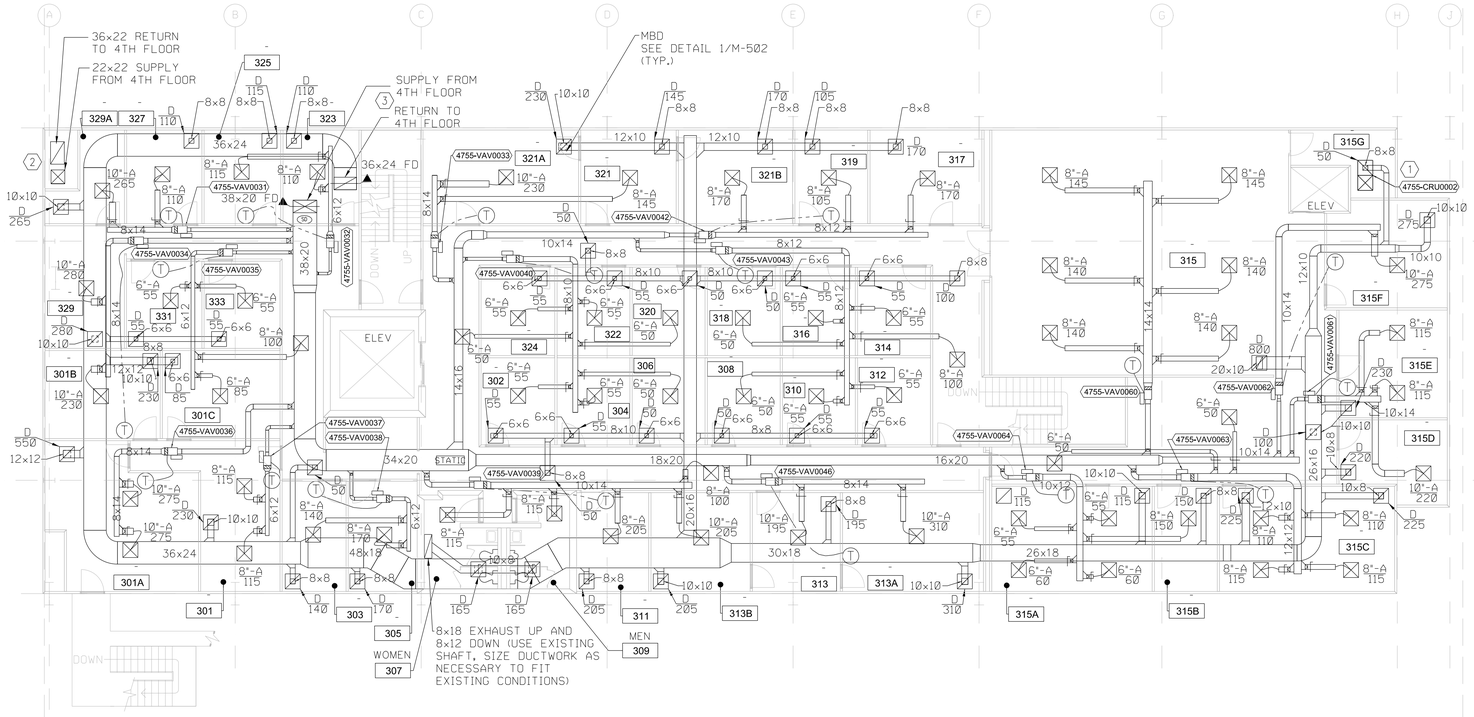

HVAC THIRD FLOOR NEW WORK PLAN – AREA "B" (1 / M205)

SCALE: 1/8" = 1'-0"

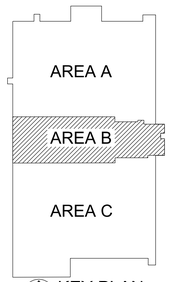

KEY PLAN
NOT TO SCALE

ALABAMA LICENSED NO. 25590 PROFESSIONAL ENGINEER DESIDERIO HERNANDEZ

WARNING
DO NOT SCALE THIS DRAWING
THIS DRAWING WAS DESIGNED TO BE PRINTED AT A NASA SHEET SIZE: MSFC STD. SIZE 40" X 26"

REV.	BY	DATE	REVISION	C.I. NO.	APPROVED

Marshall Space Flight Center
Huntsville, Alabama 35812

REVITALIZE BUILDING
MECHANICAL SYSTEMS (4755)
HVAC THIRD FLOOR NEW WORK PLAN - AREA "B"

8 6 4 2 0 16 FEET
7 5 3 1 8
SCALE: 1/8" = 1'-0"

FINAL SUBMITTAL
ISSUED FOR CONSTRUCTION

SIGNATURES ON INDEX SHEET INDICATE ACCEPTANCE OF THIS SHEET

REF. NO. 18 OF 37

M205

AE FIRM: GOODWYN | MILLS | CAWOOD — MERRICK & COMPANY — JOINT VENTURE

NASA AE CONTRACT NO. NASA- NNM12AA49C NNM12AA68T

SIGNATURES: JENNIFER LANDRY		APPROVAL RECOMMENDED: ANDY ROLAND (AS22 PROJECT A/E)	APPROVED: JIMMY GUARIN (AS22 GROUP LEAD) DATE:
A/E: DATE: 02/28/2014		APPROVAL RECOMMENDED: ANDY ROLAND (AS22 SUPPORT A/E)	DRAWING NO.
DESIGNED: J.MATTHEWS		APPROVAL RECOMMENDED: NELSON OLINGER (AS22 TEAM LEAD)	FAC-DA-4755-M205
DRAWN: J.MATTHEWS			
CHECKED: D.HERNANDEZ			
SCALE: 1/8"=1'-0"		SPEC. NO. FAC: M5057	SHEET __ OF __

MSFC-FORM 232 REV.: 8-21-89-RCL

MSFC Master Bid Disk 03-26-2014

GENERAL NOTES:

1. REFER TO SHEET M-001 FOR GENERAL NOTES APPLYING TO ALL MECHANICAL SHEETS.

2. ADD ALTERNATIVE #1 – REPLACE EXISTING CHILLED WATER AND HEATING HOT WATER PIPING WITH ALL NEW PIPING. EXCEPT NEWLY INSTALLED HEATING HOT WATER RUNOUTS TO HIGH BAY AIR HANDLERS. IF ADD ALTERNATIVE #1 IS NOT SELECTED, ONLY PIPING BRANCHES TO DEMOLISHED EQUIPMENT SHALL BE DEMOLISHED.

3. ADD ALTERNATIVE #2 – REPLACE ALL WATER CLOSETS, URINALS, SELECTED LAVATORIES SHOWN, WITH NEW FIXTURES AND REPLACE ALL LAVATORY FAUCETS. REMOVE ALL DOMESTIC HOT WATER HEATERS AND REPLACE WITH A SINGLE UNIT LOCATED ON THE 4TH FLOOR. REMOVE ALL HOT WATER PIPING AND REPLACE WITH NEW PIPING. ADD A HOT WATER RECIRCULATION PUMP AND ASSOCIATED HOT WATER RECIRCULATION PIPING.

KEYED NOTES:

1. EXISTING COMMUNICATIONS EQUIPMENT IN ROOM 401 WILL BE MOVED (BY OTHERS) TO 400A.

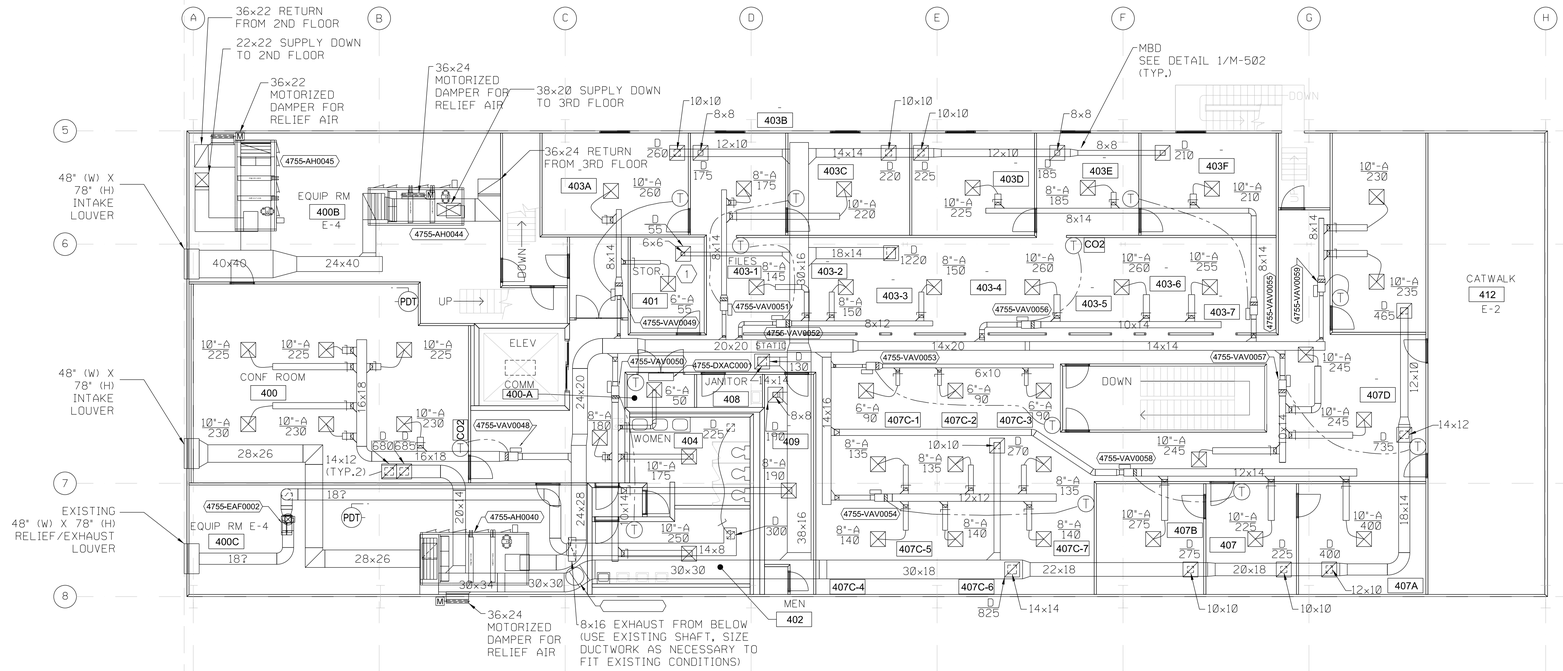

HVAC FOURTH FLOOR NEW WORK PIPING PLAN – AREA "B" (1 / M206)

SCALE: 1/8" = 1'-0"

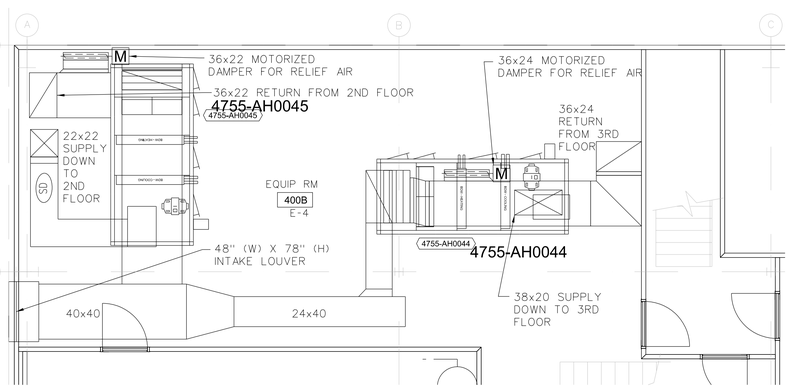

HVAC FOURTH PART PLAN – NORTH MECH RM (2 / M206)

SCALE: 1/4" = 1'-0"

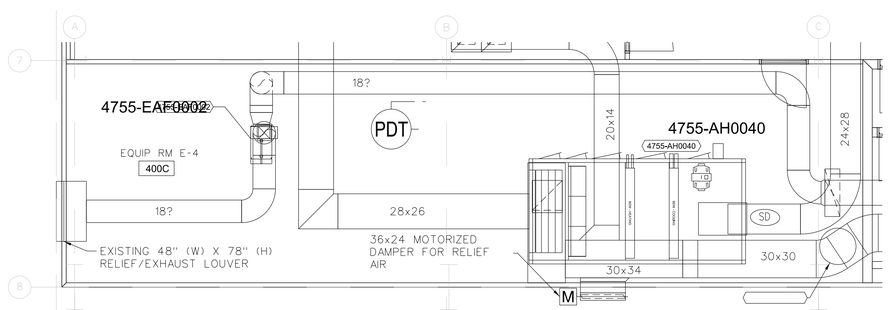

HVAC FOURTH PART PLAN – SOUTH MECH RM (3 / M206)

SCALE: 1/4" = 1'-0"

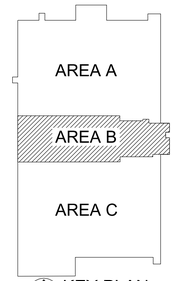

KEY PLAN
NOT TO SCALE

SCALE: 1/8" = 1'-0"

SCALE: 1/4" = 1'-0"

ALABAMA LICENSED NO. 25590 PROFESSIONAL ENGINEER DESIDERIO HERNANDEZ

WARNING
DO NOT SCALE THIS DRAWING
THIS DRAWING WAS DESIGNED TO BE PRINTED AT A NASA SHEET SIZE: MSFC STD. SIZE 42" X 28"

REV.	BY	DATE	REVISION	C.I. NO.	APPROVED

Marshall Space Flight Center
Huntsville, Alabama 35812

REVITALIZE BUILDING
MECHANICAL SYSTEMS (4755)
HVAC FOURTH FLOOR NEW WORK
DUCTWORK PLAN - AREA "B"

AE FIRM: GOODWYN | MILLS | CAWOOD — MERRICK & COMPANY — JOINT VENTURE

NASA AE CONTRACT NO. NASA- NNM12AA49C NNM12AA68T

SUBMITTED: JENNIFER LANDRY
APPROVAL RECOMMENDED: ANDY ROLAND, A522 PROJECT A/E
APPROVED: JIMMY GUARIN, A522 GROUP LEAD

AE: DATE: 02/28/2014
DESIGNED J.MATTHEWS
DRAWN J.MATTHEWS
CHECKED D.HERNANDEZ
SCALE: 1/8"=1'-0"

APPROVAL RECOMMENDED: ANDY ROLAND, A522 PROJECT A/E
APPROVAL RECOMMENDED: NELSON OLINGER, A522 TEAM LEAD
SPEC. NO. FAC M5057

DRAWING NO. FAC-DA-4755-M206
SHEET __ OF __

FINAL SUBMITTAL
ISSUED FOR CONSTRUCTION

SIGNATURES ON INDEX SHEET INDICATE ACCEPTANCE OF THIS SHEET

REF. NO. 19 OF 37 **M206**

MSFC-FORM 232 REV. 8-21-89-RCL

MSFC Master Bid Disk 03-26-2014

GENERAL NOTES:

1. REFER TO SHEET M-001 FOR GENERAL NOTES APPLYING TO ALL MECHANICAL SHEETS.

2. ADD ALTERNATIVE #1 – REPLACE EXISTING CHILLED WATER AND HEATING HOT WATER PIPING WITH ALL NEW PIPING. EXCEPT NEWLY INSTALLED HEATING HOT WATER RUNOUTS TO HIGH BAY AIR HANDLERS. IF ADD ALTERNATIVE #1 IS NOT SELECTED, ONLY PIPING BRANCHES TO DEMOLISHED EQUIPMENT SHALL BE DEMOLISHED.

3. ADD ALTERNATIVE #2 – REPLACE ALL WATER CLOSETS, URINALS, SELECTED LAVATORIES SHOWN, WITH NEW FIXTURES AND REPLACE ALL LAVATORY FAUCETS. REMOVE ALL DOMESTIC HOT WATER HEATERS AND REPLACE WITH A SINGLE UNIT LOCATED ON THE 4TH FLOOR. REMOVE ALL HOT WATER PIPING AND REPLACE WITH NEW PIPING. ADD A HOT WATER RECIRCULATION PUMP AND ASSOCIATED HOT WATER RECIRCULATION PIPING.

KEYED NOTES:

1. ROUTE 3/4" CHWS&R, AND 3/4" HWS&R TO FAN COIL UNIT. ROUTE 3/4" CONDENSATE LINE TO EXISTING SUMP PUMP.

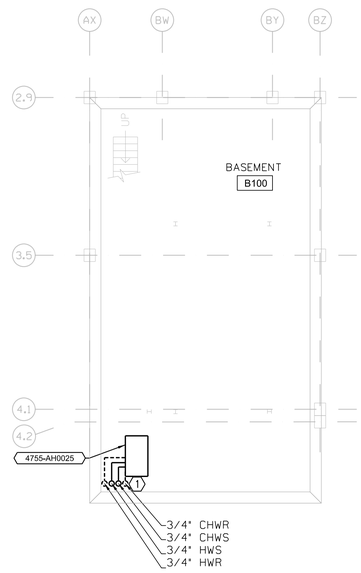

HVAC BASEMENT NEW WORK PIPING PLAN (1 / M300)

SCALE: 1/8" = 1'-0"

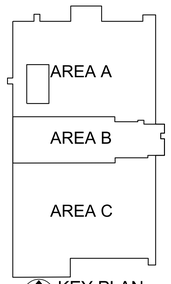

KEY PLAN
NOT TO SCALE

ALABAMA LICENSED NO. 25590 PROFESSIONAL ENGINEER DESIDERIO HERNANDEZ

WARNING
DO NOT SCALE THIS DRAWING
THIS DRAWING WAS DESIGNED TO BE PRINTED AT A NASA SHEET SIZE: MSFC STD. SIZE 40" X 28"

REV.	BY	DATE	REVISION	C.I. NO.	APPROVED

Marshall Space Flight Center
Huntsville, Alabama 35812

REVITALIZE BUILDING
MECHANICAL SYSTEMS (4755)
HVAC BASEMENT NEW WORK PIPING PLAN

8 6 4 2 0 16 FEET
7 5 3 1 8
SCALE: 1/8" = 1'-0"

AE FIRM: GOODWYN | MILLS | CAWOOD — MERRICK & COMPANY — JOINT VENTURE

NASA AE CONTRACT NO. NASA- NNM12AA49C NNM12AA68T

SUBMITTED: JENNIFER LANDRY
APPROVAL RECOMMENDED: ANDY ROLAND, AS22 PROJECT A/E
APPROVED: JIMMY GUARIN, AS22 GROUP LEAD, DATE:
AE: DATE: 11/04/13
APPROVAL RECOMMENDED: ANDY ROLAND, AS22 SUPPORT A/E
DESIGNED J.MATTHEWS
DRAWN J.MATTHEWS
CHECKED D.HERNANDEZ
APPROVAL RECOMMENDED: NELSON OLINGER, AS22 TEAM LEAD
SCALE: 1/8"=1'-0"
SPEC. NO. FAC M5057

FINAL SUBMITTAL
ISSUED FOR CONSTRUCTION

SIGNATURES ON INDEX SHEET INDICATE ACCEPTANCE OF THIS SHEET

REF. NO. 20 OF 37 M300

DRAWING NO. FAC-DA-4755-M300
SHEET __ OF __

MSFC-FORM 232 REV. 8-21-89-RCL

MSFC Master Bid Disk 03-26-2014

GENERAL NOTES:

1. REFER TO SHEET M-001 FOR GENERAL NOTES APPLYING TO ALL MECHANICAL SHEETS.
2. ADD ALTERNATIVE #1 – REPLACE EXISTING CHILLED WATER AND HEATING HOT WATER PIPING WITH ALL NEW PIPING. EXCEPT NEWLY INSTALLED HEATING HOT WATER RUNOUTS TO HIGH BAY AIR HANDLERS. IF ADD ALTERNATIVE #1 IS NOT SELECTED, ONLY PIPING BRANCHES TO DEMOLISHED EQUIPMENT SHALL BE DEMOLISHED.
3. ADD ALTERNATIVE #2 – REPLACE ALL WATER CLOSETS, URINALS, SELECTED LAVATORIES SHOWN, WITH NEW FIXTURES AND REPLACE ALL LAVATORY FAUCETS. REMOVE ALL DOMESTIC HOT WATER HEATERS AND REPLACE WITH A SINGLE UNIT LOCATED ON THE 4TH FLOOR. REMOVE ALL HOT WATER PIPING AND REPLACE WITH NEW PIPING. ADD A HOT WATER RECIRCULATION PUMP AND ASSOCIATED HOT WATER RECIRCULATION PIPING.

KEYED NOTES:

1. MINI-SPLIT DUCTLESS AC UNIT CONDENSING UNIT, ROUTE REFRIGERANT LINES UP TO DXAC-1, IN ROOM 400A ON FOURTH FLOOR, SEE SHEET M-107.
2. EXISTING CRU-01, PROVIDE NEW 1" CHWS & R PIPING TAPS FOR FUTURE CONNECTION TO CHILLED WATER SYSTEM. CAP PIPING OFF AT END, PROVIDE SHUT-OFF VALVES.
3. SERVED BY EXISTING SYSTEM.
4. SEE DETAIL 4/M-502 (TYP).
5. EXISTING EQUIPMENT TO REMAIN.
6. ROUTE 3/4" CONDENSATE LINE TO EXISTING AHU FLOOR DRAIN

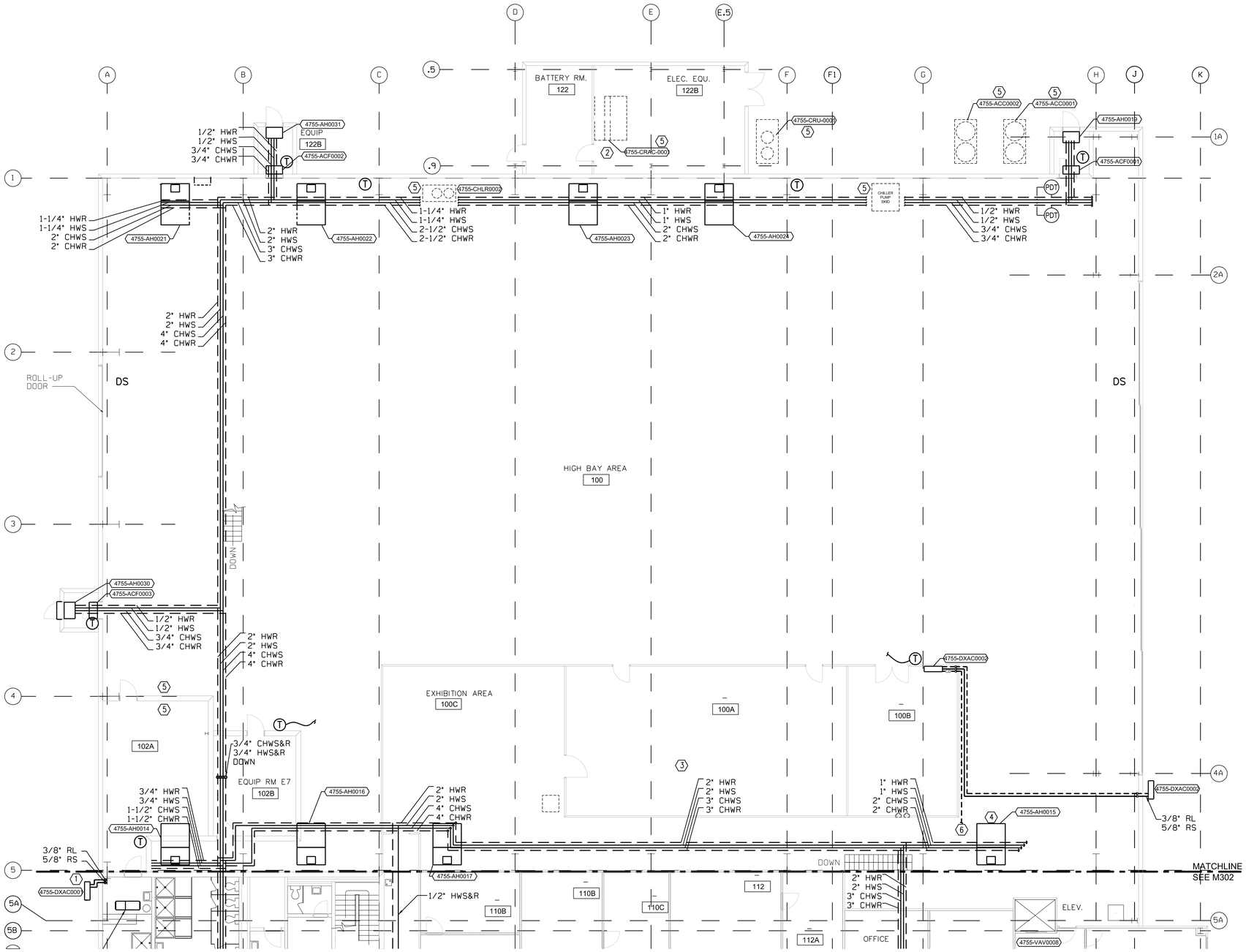

HVAC FIRST FLOOR NEW WORK PIPING PLAN – AREA "A" (1 / M301)

SCALE: 1/8" = 1'-0"

8 6 4 2 0 16 FEET
7 5 3 1 8
SCALE: 1/8" = 1'-0"

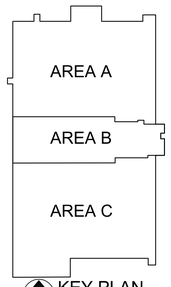

KEY PLAN
NOT TO SCALE

ALABAMA LICENSED NO. 25590 PROFESSIONAL ENGINEER DESIDERIO HERNANDEZ

WARNING
DO NOT SCALE THIS DRAWING
THIS DRAWING WAS DESIGNED TO BE PRINTED AT A NASA SHEET SIZE: MSFC STD. SIZE 40" X 28"

REV.	BY	DATE	REVISION	C.I. NO.	APPROVED

Marshall Space Flight Center
Huntsville, Alabama 35812

REVITALIZE BUILDING
MECHANICAL SYSTEMS (4755)
HVAC FIRST FLOOR NEW WORK
PIPING PLAN - AREA "A"

AE FIRM: GOODWYN | MILLS | CAWOOD — MERRICK & COMPANY — JOINT VENTURE

NASA AE CONTRACT NO. NASA- NNM12AA49C NNM12AA68T

SUBMITTED: JENNIFER LANDRY
APPROVAL RECOMMENDED: ANDY ROLAND, AS22 PROJECT A/E
APPROVED: JIMMY GUARIN

AE: DATE: 11/04/13
DESIGNED J.MATTHEWS
DRAWN J.MATTHEWS
CHECKED D.HERNANDEZ
SCALE: 1/8"=1'-0"

APPROVAL RECOMMENDED: ANDY ROLAND, AS22 SUPPORT A/E
APPROVAL RECOMMENDED: NELSON OLINGER, AS22 TEAM LEAD
SPEC. NO. FAC M5057

AS22 GROUP LEAD DATE

DRAWING NO. FAC-DA-4755-M301
SHEET __ OF __

FINAL SUBMITTAL
ISSUED FOR CONSTRUCTION

SIGNATURES ON INDEX SHEET INDICATE ACCEPTANCE OF THIS SHEET

REF. NO. 21 OF 37 M301

MSFC-FORM 232 REV. 8-21-89-RCL

MSFC Master Bid Disk 03-26-2014

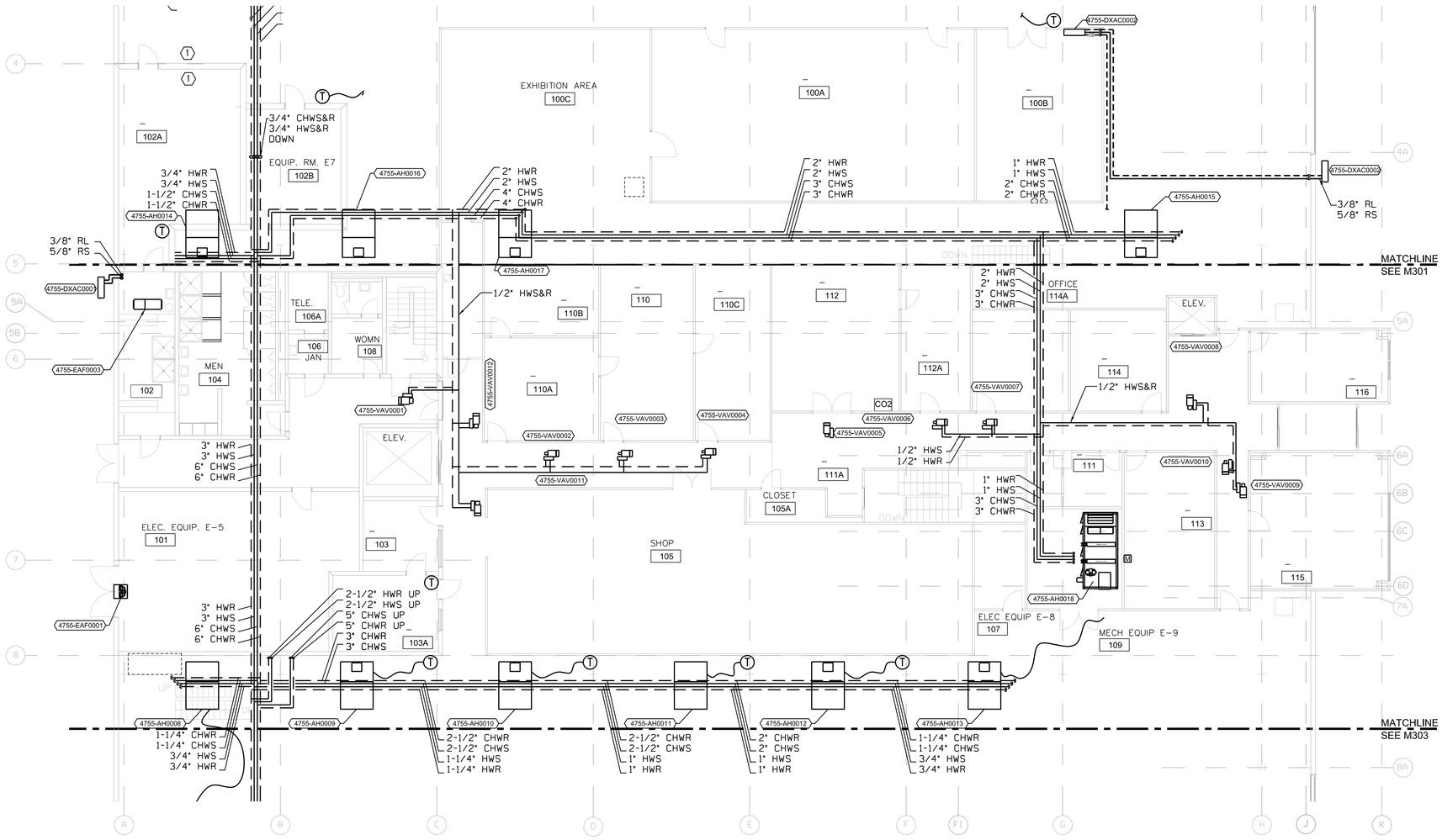

HVAC FIRST FLOOR NEW WORK PIPING PLAN – AREA "B" (1 / M302)

SCALE: 1/8" = 1'-0"

GENERAL NOTES:

1. REFER TO SHEET M-001 FOR GENERAL NOTES APPLYING TO ALL MECHANICAL SHEETS.
2. ADD ALTERNATIVE #1 – REPLACE EXISTING CHILLED WATER AND HEATING HOT WATER PIPING WITH ALL NEW PIPING. EXCEPT NEWLY INSTALLED HEATING HOT WATER RUNOUTS TO HIGH BAY AIR HANDLERS. IF ADD ALTERNATIVE #1 IS NOT SELECTED, ONLY PIPING BRANCHES TO DEMOLISHED EQUIPMENT SHALL BE DEMOLISHED.
3. ADD ALTERNATIVE #2 – REPLACE ALL WATER CLOSETS, URINALS, SELECTED LAVATORIES SHOWN, WITH NEW FIXTURES AND REPLACE ALL LAVATORY FAUCETS. REMOVE ALL DOMESTIC HOT WATER HEATERS AND REPLACE WITH A SINGLE UNIT LOCATED ON THE 4TH FLOOR. REMOVE ALL HOT WATER PIPING AND REPLACE WITH NEW PIPING. ADD A HOT WATER RECIRCULATION PUMP AND ASSOCIATED HOT WATER RECIRCULATION PIPING.

KEYED NOTES:

1. EXISTING EQUIPMENT TO REMAIN.

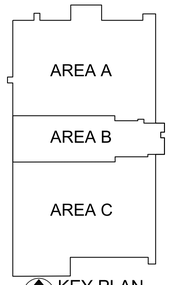

KEY PLAN
NOT TO SCALE

ALABAMA LICENSED NO. 25590 PROFESSIONAL ENGINEER DESIDERIO HERNANDEZ

WARNING
DO NOT SCALE THIS DRAWING
THIS DRAWING WAS DESIGNED TO BE PRINTED AT A NASA SHEET SIZE: MSFC STD. SIZE 40" X 28"

REV.	BY	DATE	REVISION	C.I. NO.	APPROVED

Marshall Space Flight Center
Huntsville, Alabama 35812

REVITALIZE BUILDING
MECHANICAL SYSTEMS (4755)
HVAC FIRST FLOOR NEW WORK
PIPING PLAN - AREA "B"

8 6 4 2 0 16 FEET
7 5 3 1 8
SCALE: 1/8" = 1'-0"

AE FIRM: GOODWYN | MILLS | CAWOOD — MERRICK & COMPANY — JOINT VENTURE

NASA AE CONTRACT NO.
NASA-: NNM12AA49C
NNM12AA68T

SUBMITTED: JENNIFER LANDRY
APPROVAL RECOMMENDED: ANDY ROLAND, AS22 PROJECT A/E
APPROVED: JIMMY GUARIN
AE: DATE: 11/04/13
APPROVAL RECOMMENDED: ANDY ROLAND, AS22 SUPPORT A/E
AS22 GROUP LEAD DATE:
DESIGNED J.MATTHEWS
DRAWN J.MATTHEWS
CHECKED D.HERNANDEZ
APPROVAL RECOMMENDED: NELSON OLINGER, AS22 TEAM LEAD
SCALE: 1/8"=1'-0"
SPEC. NO. FAC M5057
DRAWING NO. FAC-DA-4755-M302
SHEET __ OF __

FINAL SUBMITTAL
ISSUED FOR CONSTRUCTION

SIGNATURES ON INDEX SHEET INDICATE ACCEPTANCE OF THIS SHEET

REF. NO. 22 OF 37 M302

MSFC-FORM 232 REV. 8-21-89-RCL

MSFC Master Bid Disk 03-26-2014

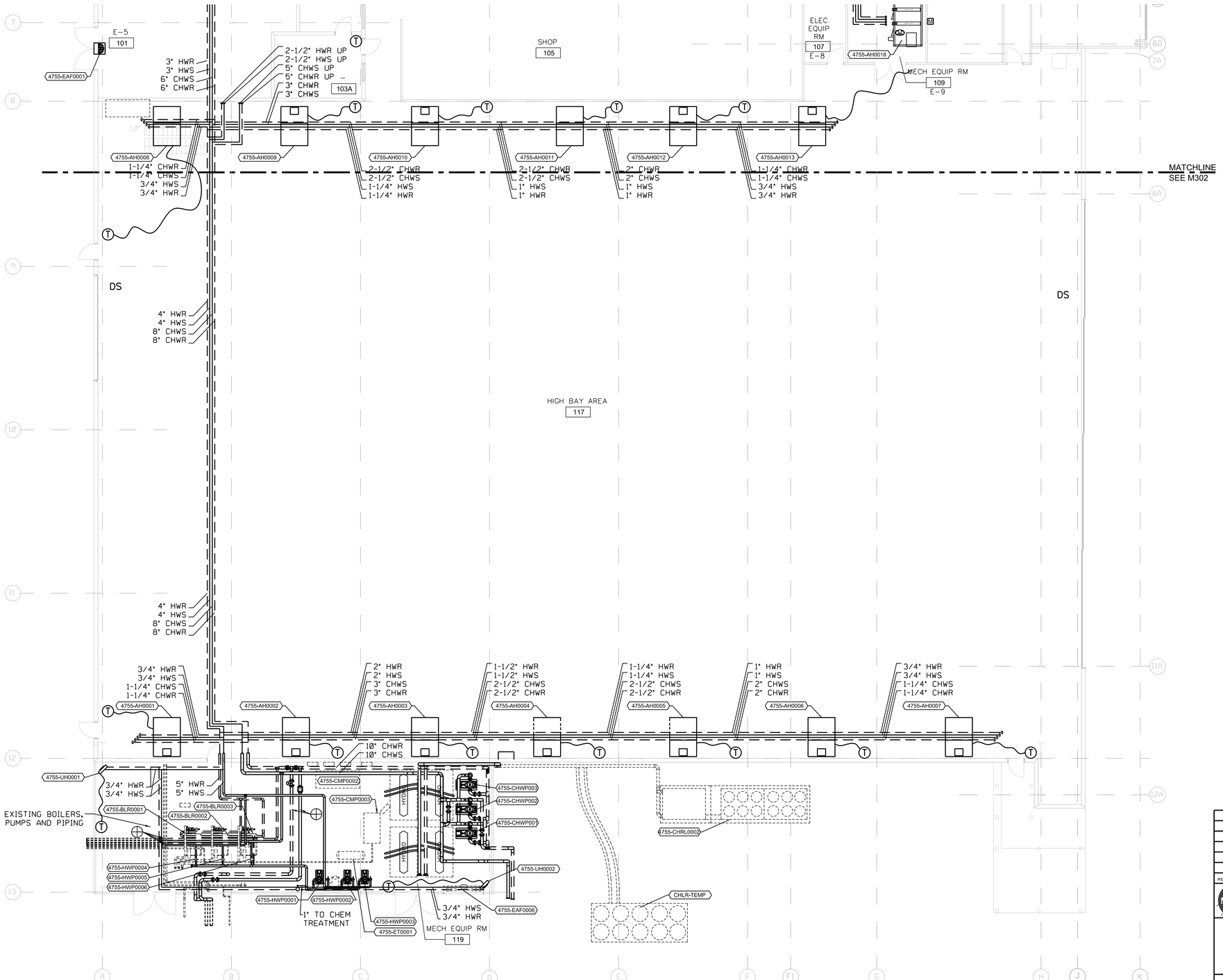

HVAC FIRST FLOOR NEW WORK PIPING PLAN – AREA "C" (1 / M303)

SCALE: 1/8" = 1'-0"

GENERAL NOTES:

1. REFER TO SHEET M-001 FOR GENERAL NOTES APPLYING TO ALL MECHANICAL SHEETS.
2. ADD ALTERNATIVE #1 – REPLACE EXISTING CHILLED WATER AND HEATING HOT WATER PIPING WITH ALL NEW PIPING. EXCEPT NEWLY INSTALLED HEATING HOT WATER RUNOUTS TO HIGH BAY AIR HANDLERS. IF ADD ALTERNATIVE #1 IS NOT SELECTED, ONLY PIPING BRANCHES TO DEMOLISHED EQUIPMENT SHALL BE DEMOLISHED.
3. ADD ALTERNATIVE #2 – REPLACE ALL WATER CLOSETS, URINALS, SELECTED LAVATORIES SHOWN, WITH NEW FIXTURES AND REPLACE ALL LAVATORY FAUCETS. REMOVE ALL DOMESTIC HOT WATER HEATERS AND REPLACE WITH A SINGLE UNIT LOCATED ON THE 4TH FLOOR. REMOVE ALL HOT WATER PIPING AND REPLACE WITH NEW PIPING. ADD A HOT WATER RECIRCULATION PUMP AND ASSOCIATED HOT WATER RECIRCULATION PIPING.
4. PROVIDE NEW WATER METER FOR INDUSTRIAL WATER (1", FIELD VERIFY SIZE). METER SHALL HAVE CAPABILITY TO TIE INTO UCS. PROVIDE NEW WATER METER FOR POTABLE INDUSTRIAL WATER (4", FIELD VERIFY SIZE). METER SHALL HAVE CAPABILITY TO TIE INTO UCS.

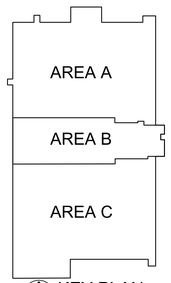

KEY PLAN
NOT TO SCALE

ALABAMA LICENSED NO. 25590 PROFESSIONAL ENGINEER DESIDERIO HERNANDEZ

WARNING
DO NOT SCALE THIS DRAWING
THIS DRAWING WAS DESIGNED TO BE PRINTED AT A NASA SHEET SIZE: MSFC STD. SIZE 40" X 28"

REV	BY	DATE	REVISION	C.I. NO.	APPROVED

Marshall Space Flight Center
Huntsville, Alabama 35812

REVITALIZE BUILDING
MECHANICAL SYSTEMS (4755)
HVAC FIRST FLOOR NEW WORK
PIPING PLAN - AREA "C"

AE FIRM: GOODWYN | MILLS | CAWOOD — MERRICK & COMPANY — JOINT VENTURE

NASA AE CONTRACT NO. NASA- NNM12AA49C NNM12AA68T

SUBMITTED: JENNIFER LANDRY
APPROVAL RECOMMENDED: ANDY ROLAND, AS22 PROJECT A/E
APPROVED: JIMMY GUARIN
AE: DATE: 11/04/13
APPROVAL RECOMMENDED: ANDY ROLAND, AS22 SUPPORT A/E
AS22 GROUP LEAD DATE:
DESIGNED J.MATTHEWS
DRAWN J.MATTHEWS
CHECKED D.HERNANDEZ
APPROVAL RECOMMENDED: NELSON OLINGER, AS22 TEAM LEAD
SCALE: 1/8"=1'-0"
SPEC. NO. FAC M5057
DRAWING NO. FAC-DA-4755-M303
SHEET __ OF __

8 6 4 2 0 16 FEET
7 5 3 1 8
SCALE: 1/8" = 1'-0"

FINAL SUBMITTAL
ISSUED FOR CONSTRUCTION

SIGNATURES ON INDEX SHEET INDICATE ACCEPTANCE OF THIS SHEET

REF. NO. 23 OF 37 M303

MSFC-FORM 232 REV. 8-21-89-RCL

MSFC Master Bid Disk 03-26-2014

GENERAL NOTES:

1. REFER TO SHEET M-001 FOR GENERAL NOTES APPLYING TO ALL MECHANICAL SHEETS.

2. ADD ALTERNATIVE #1 – REPLACE EXISTING CHILLED WATER AND HEATING HOT WATER PIPING WITH ALL NEW PIPING. EXCEPT NEWLY INSTALLED HEATING HOT WATER RUNOUTS TO HIGH BAY AIR HANDLERS. IF ADD ALTERNATIVE #1 IS NOT SELECTED, ONLY PIPING BRANCHES TO DEMOLISHED EQUIPMENT SHALL BE DEMOLISHED.

3. ADD ALTERNATIVE #2 – REPLACE ALL WATER CLOSETS, URINALS, SELECTED LAVATORIES SHOWN, WITH NEW FIXTURES AND REPLACE ALL LAVATORY FAUCETS. REMOVE ALL DOMESTIC HOT WATER HEATERS AND REPLACE WITH A SINGLE UNIT LOCATED ON THE 4TH FLOOR. REMOVE ALL HOT WATER PIPING AND REPLACE WITH NEW PIPING. ADD A HOT WATER RECIRCULATION PUMP AND ASSOCIATED HOT WATER RECIRCULATION PIPING.

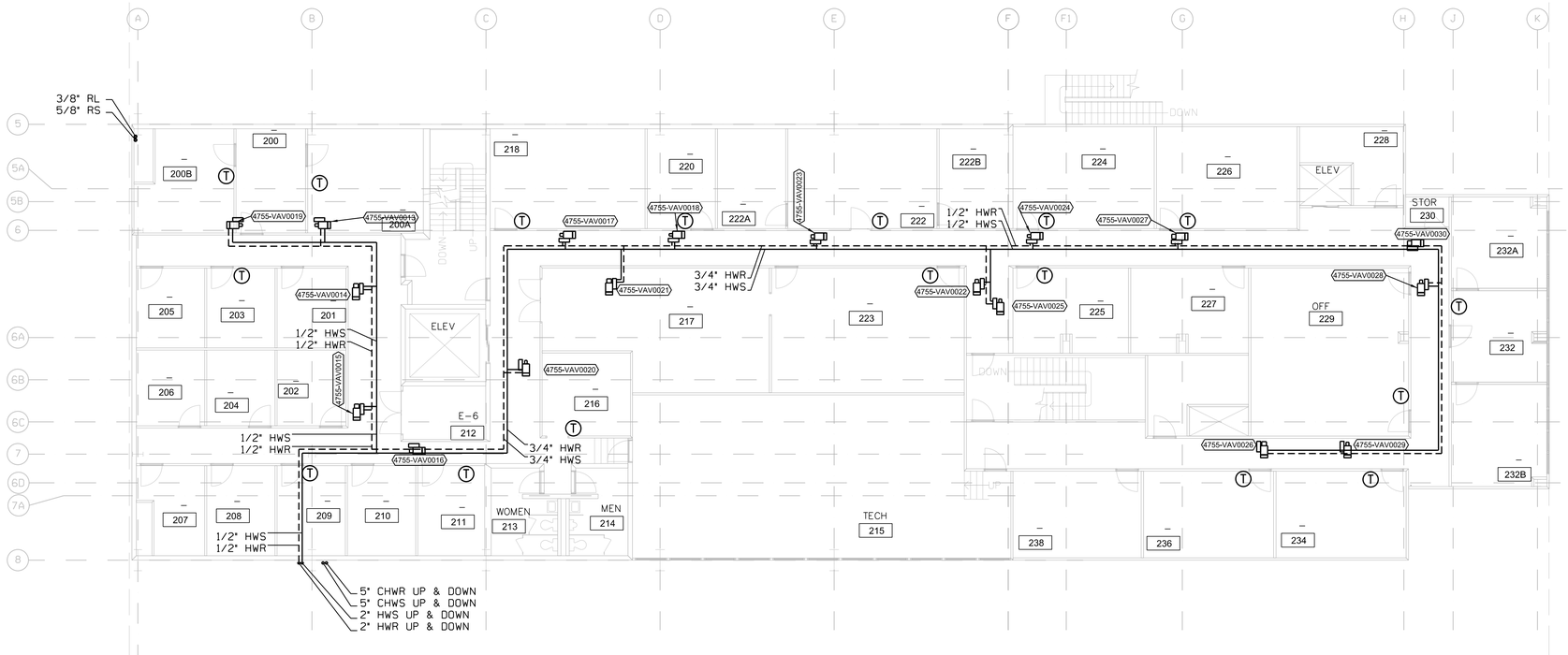

HVAC SECOND FLOOR NEW WORK PIPING PLAN – AREA "B" (1 / M304)

SCALE: 1/8" = 1'-0"

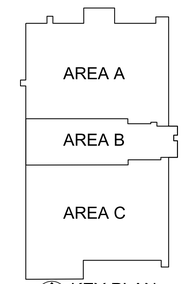

KEY PLAN
NOT TO SCALE

ALABAMA LICENSED NO. 25590 PROFESSIONAL ENGINEER DESIDERIO HERNANDEZ

WARNING
DO NOT SCALE THIS DRAWING
THIS DRAWING WAS DESIGNED TO BE PRINTED AT A NASA SHEET SIZE: MSFC STD. SIZE 40" X 28"

REV	BY	DATE	REVISION	C.I. NO.	APPROVED

Marshall Space Flight Center
Huntsville, Alabama 35812

REVITALIZE BUILDING
MECHANICAL SYSTEMS (4755)
HVAC SECOND FLOOR NEW WORK
PIPING PLAN - AREA "B"

8 6 4 2 0 16 FEET
7 5 3 1 8
SCALE: 1/8" = 1'-0"

AE FIRM: GOODWYN | MILLS | CAWOOD — MERRICK & COMPANY — JOINT VENTURE

NASA AE CONTRACT NO.
NASA: NNM12AA49C
NNM12AA68T

SUBMITTED: JENNIFER LANDRY
APPROVAL RECOMMENDED: ANDY ROLAND, AS22 PROJECT A/E
APPROVED: JIMMY GUARIN
AE: DATE: 11/04/13
DESIGNED J.MATTHEWS
DRAWN J.MATTHEWS
CHECKED D.HERNANDEZ
SCALE: 1/8"=1'-0"
APPROVAL RECOMMENDED: ANDY ROLAND, AS22 SUPPORT A/E
APPROVAL RECOMMENDED: NELSON OLINGER, AS22 TEAM LEAD
AS22 GROUP LEAD DATE:
SPEC. NO. FAC M5057
DRAWING NO. FAC-DA-4755-M304
SHEET __ OF __

FINAL SUBMITTAL
ISSUED FOR CONSTRUCTION

SIGNATURES ON INDEX SHEET INDICATE ACCEPTANCE OF THIS SHEET

REF. NO. 24 OF 37 M304

MSFC-FORM 232 REV. 8-21-89-RCL

MSFC Master Bid Disk 03-26-2014

GENERAL NOTES:

1. REFER TO SHEET M-001 FOR GENERAL NOTES APPLYING TO ALL MECHANICAL SHEETS.

2. ADD ALTERNATIVE #1 – REPLACE EXISTING CHILLED WATER AND HEATING HOT WATER PIPING WITH ALL NEW PIPING. EXCEPT NEWLY INSTALLED HEATING HOT WATER RUNOUTS TO HIGH BAY AIR HANDLERS. IF ADD ALTERNATIVE #1 IS NOT SELECTED, ONLY PIPING BRANCHES TO DEMOLISHED EQUIPMENT SHALL BE DEMOLISHED.

3. ADD ALTERNATIVE #2 – REPLACE ALL WATER CLOSETS, URINALS, SELECTED LAVATORIES SHOWN, WITH NEW FIXTURES AND REPLACE ALL LAVATORY FAUCETS. REMOVE ALL DOMESTIC HOT WATER HEATERS AND REPLACE WITH A SINGLE UNIT LOCATED ON THE 4TH FLOOR. REMOVE ALL HOT WATER PIPING AND REPLACE WITH NEW PIPING. ADD A HOT WATER RECIRCULATION PUMP AND ASSOCIATED HOT WATER RECIRCULATION PIPING.

KEYED NOTES:

1. EXISTING CRU-02.

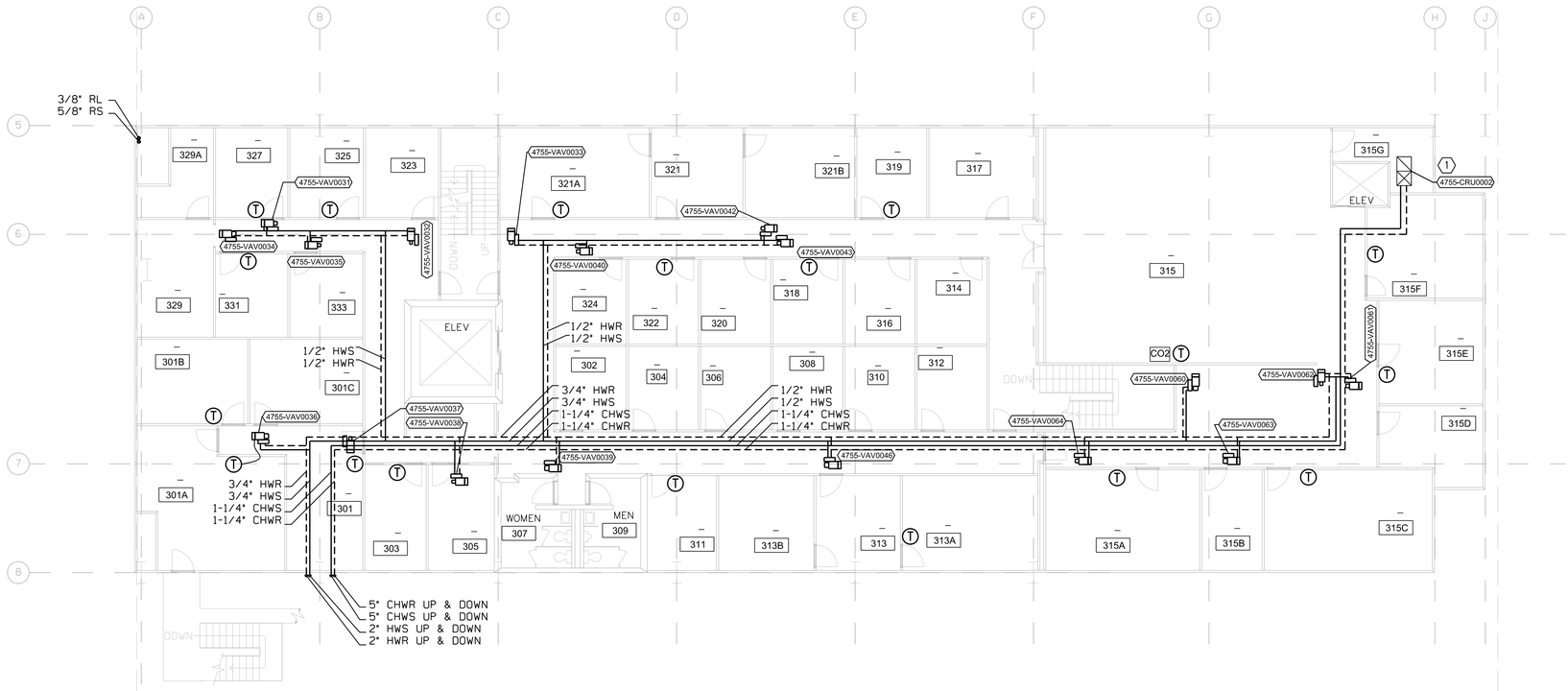

HVAC THIRD FLOOR NEW WORK PIPING PLAN – AREA "B" (1 / M305)

SCALE: 1/8" = 1'-0"

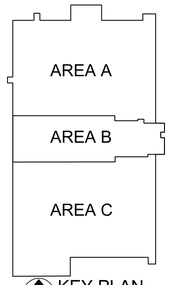

KEY PLAN
NOT TO SCALE

ALABAMA LICENSED NO. 25590 PROFESSIONAL ENGINEER DESIDERIO HERNANDEZ

WARNING
DO NOT SCALE THIS DRAWING
THIS DRAWING WAS DESIGNED TO BE PRINTED AT A NASA SHEET SIZE: MSFC STD. SIZE 40" X 28"

REV.	BY	DATE	REVISION	C.I. NO.	APPROVED

Marshall Space Flight Center
Huntsville, Alabama 35812

REVITALIZE BUILDING
MECHANICAL SYSTEMS (4755)
HVAC THIRD FLOOR NEW WORK
PIPING PLAN - AREA "B"

8 6 4 2 0 16 FEET
7 5 3 1 8
SCALE: 1/8" = 1'-0"

AE FIRM: GOODWYN | MILLS | CAWOOD — MERRICK & COMPANY — JOINT VENTURE

NASA AE CONTRACT NO. NASA- NNM12AA49C NNM12AA68T

SUBMITTED: JENNIFER LANDRY
APPROVAL RECOMMENDED: ANDY ROLAND, AS22 PROJECT A/E
APPROVED: JIMMY GUARIN, AS22 GROUP LEAD, DATE:
AE: DATE: 11/04/13
APPROVAL RECOMMENDED: ANDY ROLAND, AS22 SUPPORT A/E
DESIGNED J.MATTHEWS
DRAWN J.MATTHEWS
CHECKED D.HERNANDEZ
APPROVAL RECOMMENDED: NELSON OLINGER, AS22 TEAM LEAD
SCALE: 1/8"=1'-0"
SPEC. NO. FAC M5057

FINAL SUBMITTAL
ISSUED FOR CONSTRUCTION

SIGNATURES ON INDEX SHEET INDICATE ACCEPTANCE OF THIS SHEET

REF. NO. 25 OF 37 M305

DRAWING NO. FAC-DA-4755-M305
SHEET __ OF __

MSFC-FORM 232 REV. 8-21-89-RCL

MSFC Master Bid Disk 03-26-2014

GENERAL NOTES:

1. REFER TO SHEET M-001 FOR GENERAL NOTES APPLYING TO ALL MECHANICAL SHEETS.

2. ADD ALTERNATIVE #1 – REPLACE EXISTING CHILLED WATER AND HEATING HOT WATER PIPING WITH ALL NEW PIPING. EXCEPT NEWLY INSTALLED HEATING HOT WATER RUNOUTS TO HIGH BAY AIR HANDLERS. IF ADD ALTERNATIVE #1 IS NOT SELECTED, ONLY PIPING BRANCHES TO DEMOLISHED EQUIPMENT SHALL BE DEMOLISHED.

3. ADD ALTERNATIVE #2 – REPLACE ALL WATER CLOSETS, URINALS, SELECTED LAVATORIES SHOWN, WITH NEW FIXTURES AND REPLACE ALL LAVATORY FAUCETS. REMOVE ALL DOMESTIC HOT WATER HEATERS AND REPLACE WITH A SINGLE UNIT LOCATED ON THE 4TH FLOOR. REMOVE ALL HOT WATER PIPING AND REPLACE WITH NEW PIPING. ADD A HOT WATER RECIRCULATION PUMP AND ASSOCIATED HOT WATER RECIRCULATION PIPING.

KEYED NOTES:

1. MINI-SPLIT DUCTLESS DX SYSTEM, MOUNTED ABOVE DOOR, FOR COMMUNICATIONS EQUIPMENT. ROUTE CONDENSATE DRAIN (PROVIDE INTEGRAL CONDENSATE PUMP) TO NEAREST FLOOR DRAIN. RUN REFRIGERANT LINES DOWN TO DXAC-0001 ON GROUND, SEE SHEET M-302.

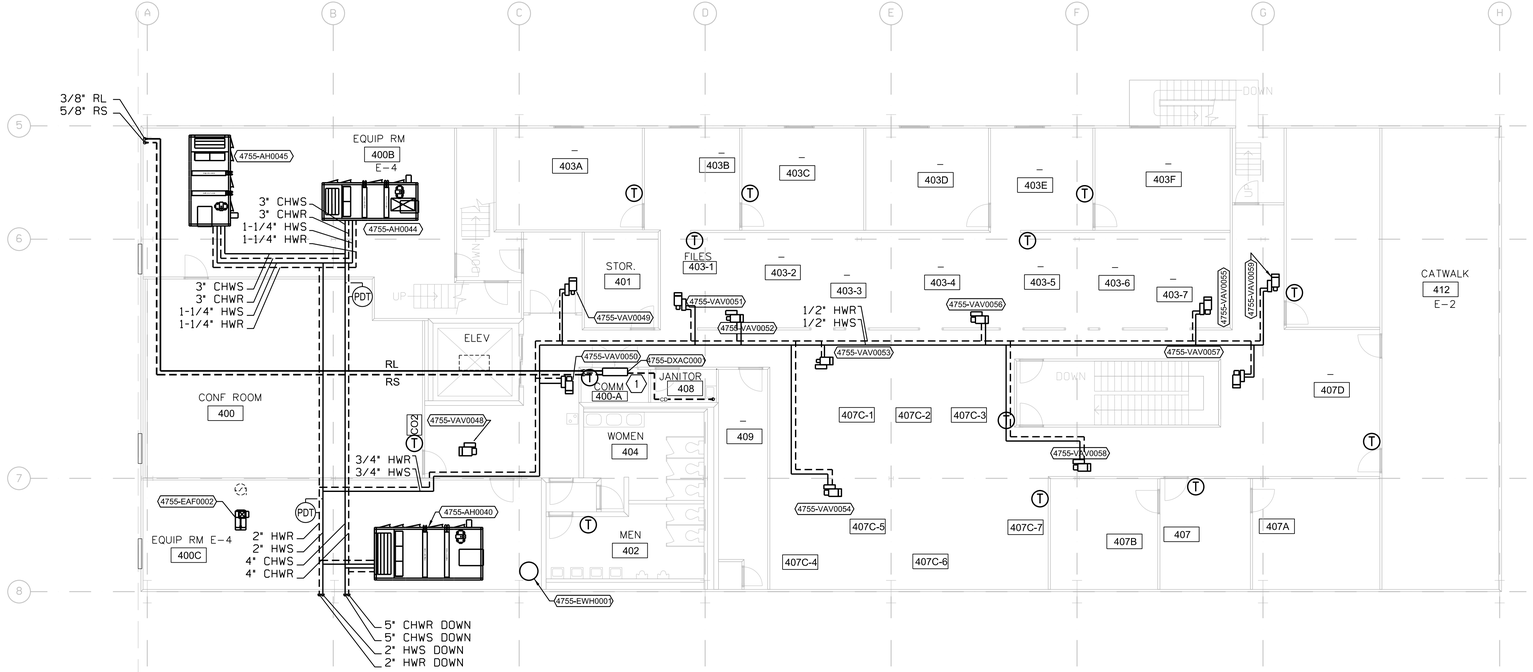

HVAC FOURTH FLOOR NEW WORK PIPING PLAN – AREA "B" (1 / M306)

SCALE: 1/8" = 1'-0"

8 6 4 2 0 16 FEET
7 5 3 1 8
SCALE: 1/8" = 1'-0"

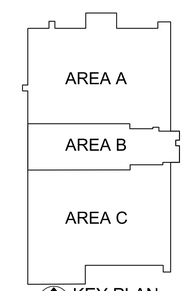

KEY PLAN
NOT TO SCALE

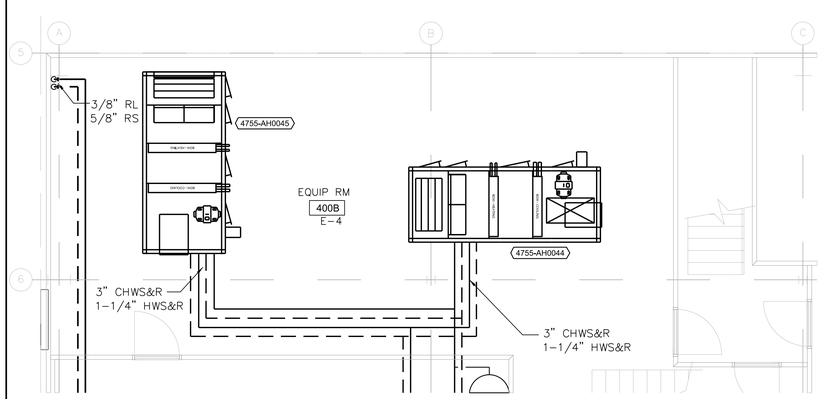

HVAC FOURTH PART PLAN – NORTH MECH RM (2 / M306)

SCALE: 1/4" = 1'-0"

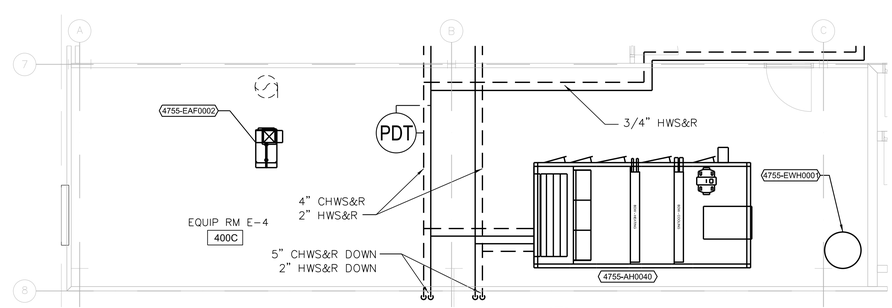

HVAC FOURTH PART PLAN – SOUTH MECH RM (3 / M306)

SCALE: 1/4" = 1'-0"

ALABAMA LICENSED NO. 25590 PROFESSIONAL ENGINEER DESIDERIO HERNANDEZ

WARNING
DO NOT SCALE THIS DRAWING
THIS DRAWING WAS DESIGNED TO BE PRINTED AT A NASA SHEET SIZE: MSFC STD. SIZE 40" X 28"

REV.	BY	DATE	REVISION	C.I. NO.	APPROVED

Marshall Space Flight Center
Huntsville, Alabama 35812

REVITALIZE BUILDING
MECHANICAL SYSTEMS (4755)
HVAC FOURTH FLOOR NEW WORK
PIPING PLAN - AREA "B"

AE FIRM: GOODWYN | MILLS | CAWOOD — MERRICK & COMPANY — JOINT VENTURE

NASA AE CONTRACT NO. NASA- NNM12AA49C NNM12AA68T

SUBMITTED: JENNIFER LANDRY
AE: DATE: 11/04/13
DESIGNED J.MATTHEWS
DRAWN J.MATTHEWS
CHECKED D.HERNANDEZ
SCALE: 1/8"=1'-0"

APPROVAL RECOMMENDED: ANDY ROLAND — AS22 PROJECT A/E
APPROVAL RECOMMENDED: ANDY ROLAND — AS22 SUPPORT A/E
APPROVAL RECOMMENDED: NELSON OLINGER — AS22 TEAM LEAD
SPEC. NO.: FAC M5057

APPROVED: JIMMY GUARIN
AS22 GROUP LEAD DATE:

DRAWING NO. FAC-DA-4755-M306
SHEET __ OF __

FINAL SUBMITTAL
ISSUED FOR CONSTRUCTION

SIGNATURES ON INDEX SHEET INDICATE ACCEPTANCE OF THIS SHEET

REF. NO. 26 OF 37 M306

MSFC-FORM 232 REV. 8-21-98-RCL

MSFC Master Bid Disk 03-26-2014

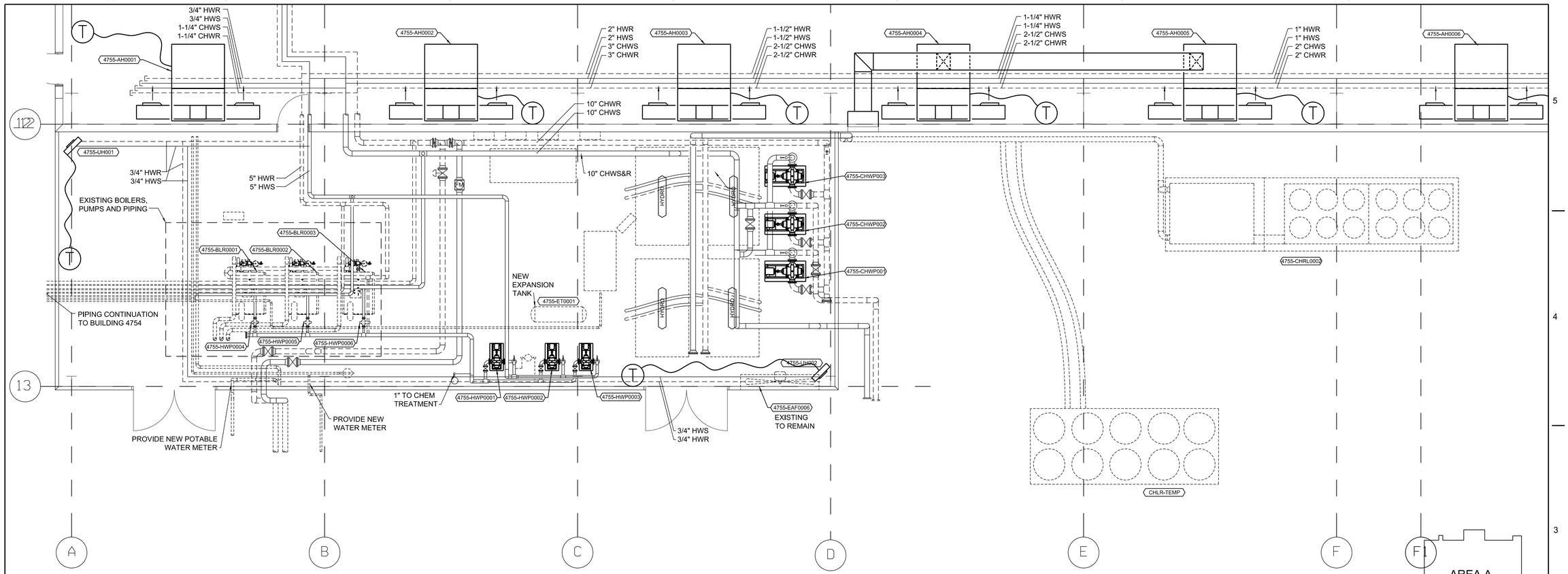

GENERAL NOTES:

1. REFER TO SHEET M-001 FOR GENERAL NOTES APPLYING TO ALL MECHANICAL SHEETS.

2. ADD ALTERNATIVE #1 – REPLACE EXISTING CHILLED WATER AND HEATING HOT WATER PIPING WITH ALL NEW PIPING. EXCEPT NEWLY INSTALLED HEATING HOT WATER RUNOUTS TO HIGH BAY AIR HANDLERS. IF ADD ALTERNATIVE #1 IS NOT SELECTED, ONLY PIPING BRANCHES TO DEMOLISHED EQUIPMENT SHALL BE DEMOLISHED.

3. ADD ALTERNATIVE #2 – REPLACE ALL WATER CLOSETS, URINALS, LAVATORIES WITH NEW FIXTURES. REMOVE ALL DOMESTIC HOT WATER HEATERS AND REPLACE WITH A SINGLE UNIT LOCATED ON THE 4TH FLOOR. REMOVE ALL HOT WATER PIPING AND REPLACE WITH NEW PIPING. ADD A HOT WATER RECIRCULATION PUMP AND ASSOCIATED HOT WATER RECIRCULATION PIPING.

4. PROVIDE NEW WATER METER FOR WATER (1", FIELD VERIFY SIZE). METER SHALL HAVE CAPABILITY TO TIE INTO UCS. PROVIDE NEW WATER METER FOR POTABLE WATER (4", FIELD VERIFY SIZE). METER SHALL HAVE CAPABILITY TO TIE INTO UCS.

HVAC ENLARGED FIRST FLOOR MECHANICAL PLAN

SCALE: 1/4" = 1'-0"

1
M303 M401

4 3 2 1 0 8 FEET

SCALE: 1/4" = 1'-0"

ALABAMA LICENSED NO. 25590 PROFESSIONAL ENGINEER DESIDERIO HERNANDEZ

WARNING
DO NOT SCALE THIS DRAWING
THIS DRAWING WAS DESIGNED TO BE PRINTED AT A NASA SHEET SIZE: MSFC STD. SIZE 40" X 28"

REV.	BY	DATE	REVISION	C.I. NO.	APPROVED

Marshall Space Flight Center
Huntsville, Alabama 35812

REVITALIZE BUILDING
MECHANICAL SYSTEMS (4755)
HVAC FIRST FLOOR NEW WORK PLAN - AREA "C"

AE FIRM: GOODWYN | MILLS | CAWOOD — MERRICK & COMPANY — JOINT VENTURE

NASA AE CONTRACT NO. NASA- NNM12AA49C NNM12AA68T

SUBMITTED: JENNIFER LANDRY
APPROVAL RECOMMENDED: ANDY ROLAND, A/S22 PROJECT A/E
APPROVED: JIMMY GUARIN, A/S22 GROUP LEAD, DATE:
AE: DATE: 11/04/13
DESIGNED J.MATTHEWS
DRAWN J.MATTHEWS
CHECKED D.HERNANDEZ
SCALE: 1/8"=1'-0"
APPROVAL RECOMMENDED: ANDY ROLAND, A/S22 SUPPORT A/E
APPROVAL RECOMMENDED: NELSON OLINGER, A/S22 TEAM LEAD
SPEC. NO. FAC M5057

FINAL SUBMITTAL
ISSUED FOR CONSTRUCTION

SIGNATURES ON INDEX SHEET INDICATE ACCEPTANCE OF THIS SHEET

REF. NO. 27 OF 37

M401

DRAWING NO. FAC-DA-4755-M401

SHEET __ OF __

MSFC-FORM 232 REV. 8-21-89-RCL

MSFC Master Bid Disk 03-26-2014

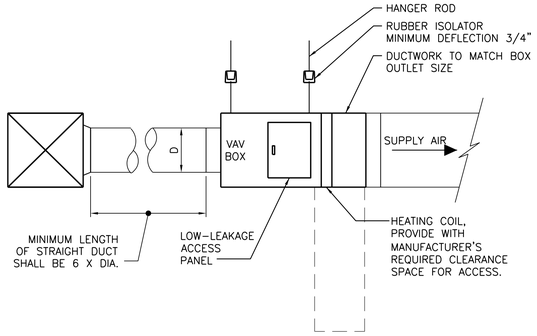

VAV TERMINAL BOX (1 / M-501)

NO SCALE

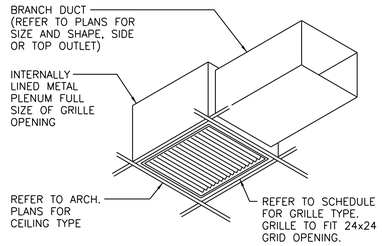

RETURN /EXHAUST GRILLE PLENUM (2 / M-501)

NO SCALE

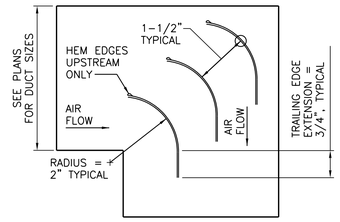

NOTES:
1. ALL TURNING VANES TO BE MADE OF 18 GA. GALV. SHEET METAL, 2" RAD., 1-1/2" SPACING ON DIAGONAL. 3/4" TRAILING EDGE.
2. DOUBLE THICKNESS FOR DUCT VELOCITIES ABOVE 2000 FPM.
3. EDGES OF VANES SHALL BE CLEANLY SHEARED WITH NO BURRS.
4. VANES SHALL BE SECURELY WELDED TO RUNNERS, AND WELD RUNNERS TO DUCT SIDES, AS SHOWN FOR IN SMACNA MANUAL.

MED. VEL. ELBOW/TURNING VANE (3 / M-501)

NO SCALE

NOTES:
1. FOR INTERNALLY ISOLATED FAN ELIMINATE ALL FLEX DUCTWORK CONNECTIONS.
2. PROVIDE ACCESS DOOR AND VIEWING WINDOWS AT ALL COIL, FILTER, FAN AND MIXING SECTIONS.

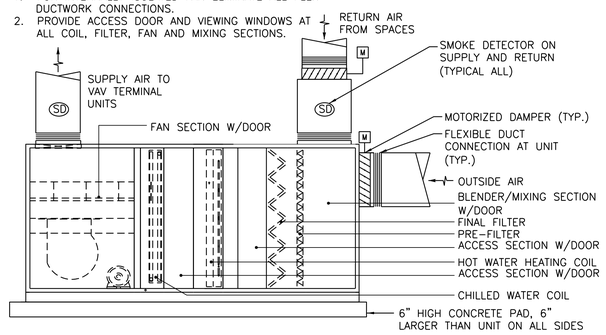

TYPICAL VAV AIR HANDLING UNIT (AHU) (4 / M-501)

NO SCALE

NOTE:
CONTRACTOR SHALL PROVIDE SEISMIC SUPPORT BRACING PER THE LATEST EDITION OF THE INTERNATIONAL BUILDING CODE.

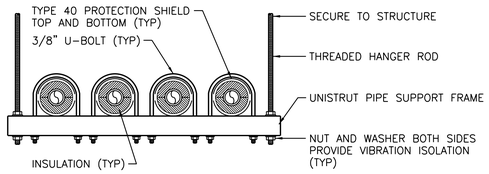

INTERIOR HORIZONTAL PIPE SUPPORT (5 / M-501)

NO SCALE

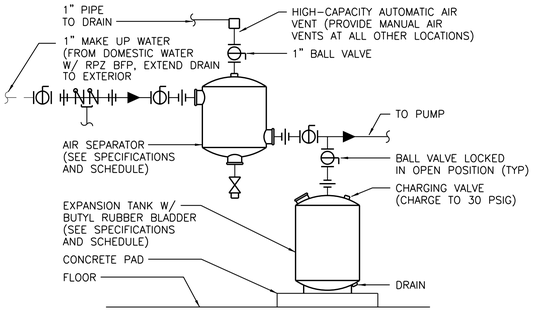

DIAPHRAGM EXPANSION TANK (6 / M-501)

NO SCALE

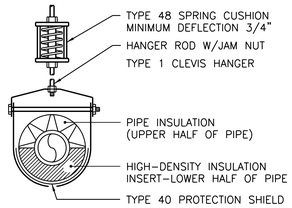

SPRING ISOLATED PIPE HANGER (7 / M-501)

NO SCALE

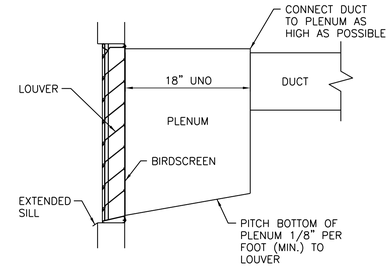

NOTE:
PROVIDE MOTORIZED DAMPERS AS REQUIRED PER PLANS AND LOUVER SCHEDULES.

DUCT CONNECTION TO LOUVER (8 / M-501)

NO SCALE

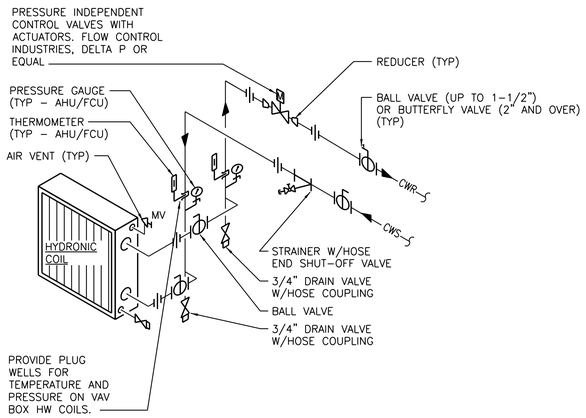

CHILLED & HOT WATER COIL PIPING (9 / M-501)

NO SCALE

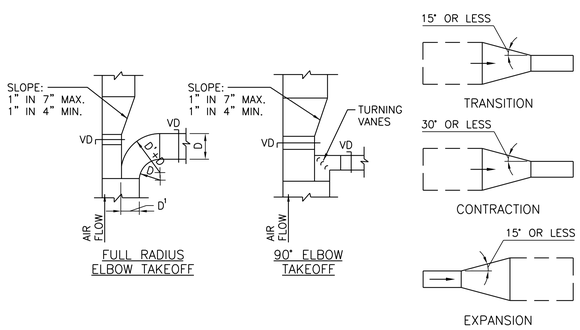

NOTE:
DPR OPERATORS FOR INSULATED DUCTS MUST INCLUDE SHAFT EXTENSIONS TO PREVENT INTERFERENCE BETWEEN INSULATION AND HANDLE.

TAKEOFF FITTINGS @ MAINS

RECTANGULAR DUCTWORK DETAILS (10 / M-501)

NO SCALE

ALABAMA LICENSED NO. 25590 PROFESSIONAL ENGINEER DESIDERIO HERNANDEZ

WARNING
DO NOT SCALE THIS DRAWING
THIS DRAWING WAS DESIGNED TO BE PRINTED AT A NASA SHEET SIZE: MSFC STD. SIZE 40" X 28"

REV.	BY	DATE	REVISION	C.I. NO.	APPROVED		

Marshall Space Flight Center
Huntsville, Alabama 35812

REVITALIZE BUILDING
MECHANICAL SYSTEMS (4755)
HVAC DETAILS

AE FIRM: GOODWYN | MILLS | CAWOOD — MERRICK & COMPANY — JOINT VENTURE

NASA AE CONTRACT NO. NASA: NNM12AA49C NNM12AA68T

SUBMITTED: JENNIFER LANDRY
APPROVAL RECOMMENDED: ANDY ROLAND, AS22 PROJECT A/E
APPROVED: JIMMY GUARIN, AS22 GROUP LEAD, DATE:
AE: DATE: 11/04/13
APPROVAL RECOMMENDED: ANDY ROLAND, AS22 SUPPORT A/E
DESIGNED J.MATTHEWS
DRAWN J.MATTHEWS
CHECKED D.HERNANDEZ
APPROVAL RECOMMENDED: NELSON OLINGER, AS22 TEAM LEAD
SCALE: NOT TO SCALE
SPEC. NO. FAC M5057
DRAWING NO. FAC-DA-4755-M501
SHEET __ OF __

FINAL SUBMITTAL
ISSUED FOR CONSTRUCTION

SIGNATURES ON INDEX SHEET INDICATE ACCEPTANCE OF THIS SHEET

REF. NO. 28 OF 37 M501

MSFC-FORM 232 REV. 8-21-89-MCL

MSFC Master Bid Disk 03-26-2014

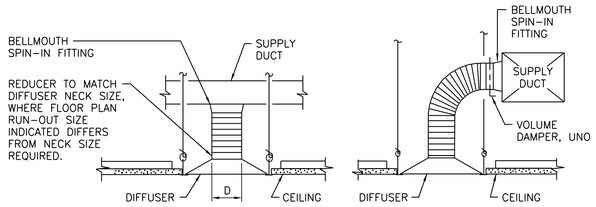

NOTES:
1. PROVIDE MAXIMUM OF 5'-0" FLEX DUCT @ DIFFUSER.
2. PROVIDE VOLUME DAMPERS WITH INSULATION STANDOFFS.
3. BELLMOUTH DIAMETER TO BE DUCT DIAMETER PLUS 2" WHERE DUCT SIZES ALLOW.
4. INSTALL TAKEOFFS AT NO CLOSER THAN 4 DIAMETERS OR 4 TIMES THE LARGEST RECTANGULAR SIZE OF THE TAKEOFF DUCT FROM ANY ELBOWS, SPLITS OR TRANSITIONS OR REDUCERS.

BRANCH RUNOUT AT DIFFUSER (1 / M-502)
NO SCALE

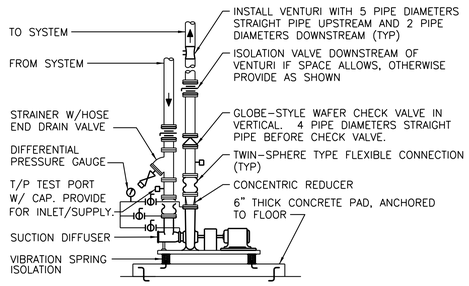

BASE MOUNTED PUMP (2 / M-502)
NO SCALE

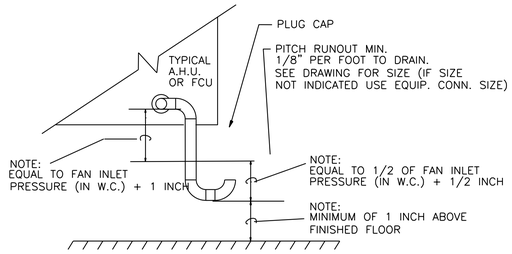

NOTE TO CONTRACTOR:
MOUNT EQUIPMENT CURB SHALL BE HIGH ENOUGH ABOVE FINISHED FLOOR TO MEET TRAP DEPTH REQUIREMENTS.

DRAW THRU CONDENSATE TRAP (3 / M-502)
NO SCALE

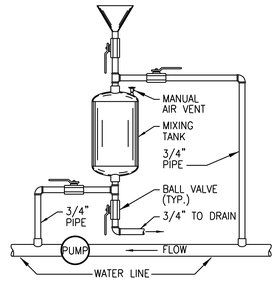

CHEMICAL FEED TANK (CT) (5 / M-502)
NO SCALE

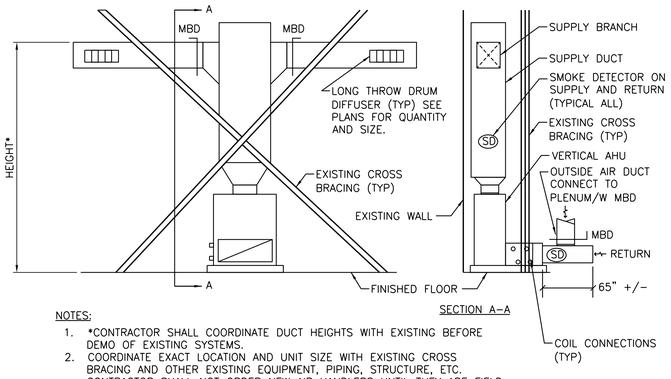

NOTES:
1. *CONTRACTOR SHALL COORDINATE DUCT HEIGHTS WITH EXISTING BEFORE DEMO OF EXISTING SYSTEMS.
2. COORDINATE EXACT LOCATION AND UNIT SIZE WITH EXISTING CROSS BRACING AND OTHER EXISTING EQUIPMENT, PIPING, STRUCTURE, ETC. CONTRACTOR SHALL NOT ORDER NEW AIR HANDLERS UNTIL THEY ARE FIELD VERIFIED TO FIT BETWEEN CROSS BRACING.
3. RETURN DUCTWORK DIMENSIONS ARE 22"X16" FOR 1,800 CFM UNITS AND 32"X16" FOR 3,400 CFM UNITS.

HIGH BAY VERTICAL AHU DETAIL (4 / M-502)
NO SCALE

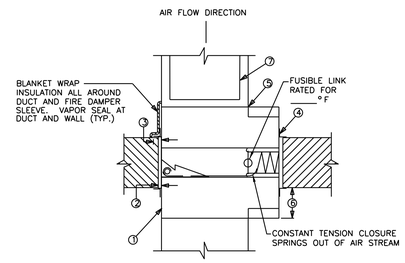

1. FACTORY SLEEVED FIRE DAMPER W/ BLADES AND SPRINGS OUT OF AIR STREAM. INSTALLATION SHALL CONFORM TO SMACNA & NFPA.
2. MINIMUM 5 IN. CLEARANCE ALL AROUND. COORDINATE SIZE OF OPENING TO ALLOW FOR THERMAL EXPANSION.
3. ALL MOUNTING ANGLES SHALL OVERLAP WALL MININUM 1 IN., OVERLAP 2 IN. WHERE POSSIBLE.
4. ALL MOUNTING ANGLES SHALL BE MINIMUM 1-1/2 IN. X 1-1/2 IN. X 1/8 IN. GALVANIZED STEEL. SECURE ANGLES TO SLEEVE MAXIMUM 6 IN. ON CENTER. DO NOT SECURE TO CEILING/FLOOR.
5. ALL DUCT CONNECTIONS SHALL BE BREAK AWAY TYPE PER SMACNA & NFPA.
6. MAXIMUM 6 IN. ALL SIDES.
7. DUCT ACCESS DOORS SHALL BE LOCATED FOR CONVENIENT ACCESS TO EACH FIRE DAMPER.

HORIZONTAL MOUNTED FIRE DAMPER (6 / M-502)
NO SCALE

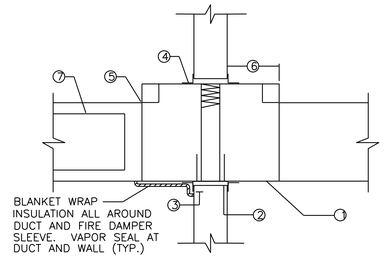

2 PROVIDE CLEARANCE ALL AROUND. COORDINATE SIZE OF OPENING TO
1 FACTORY SLEEVED FIRE DAMPER W/ BLADES OUT OF AIR STREAM. INSTALLATION SHALL CONFORM TO SMACNA & NFPA.
ALLOW FOR THERMAL EXPANSION.
3 ALL MOUNTING ANGLES SHALL OVERLAP WALL MININUM 1 IN., OVERLAP 2 IN. WHERE POSSIBLE.
4 ALL MOUTING ANGLES SHALL BE MINIMUM 1-1/2 IN. X 1-1/2 IN. X 1/8 IN. GALVANIZED STEEL. SECURE ANGLES TO SLEEVE MAXIMUM 6 IN. O.C. DO NOT SECURE TO WALL.
5 ALL JOINTS SHALL BE BREAK AWAY TYPE PER SMACNA $ NFPA.
6 MAXIMUM 6 IN. ALL SIDES.
7 PROVIDE DUCT ACCESS DOORS FOR EACH FIRE DAMPER. LOCATE FOR MOST CONVENIENT ACCESS.

VERTICAL FIRE DAMPER (7 / M-502)
NO SCALE

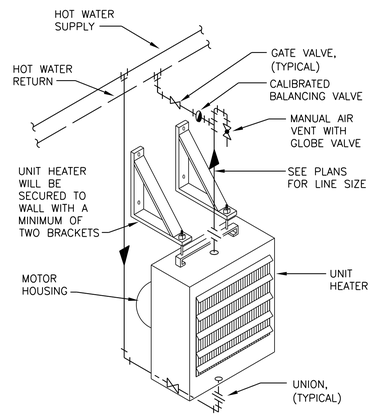

HOT WATER UNIT HEATER (8 / M-502)
NO SCALE

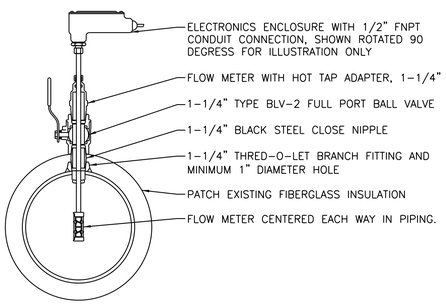

NOTE:
1. LOCATE METER A MINIMUM OF 10 PIPE DIAMETERS DOWNSTREAM AND 5 PIPE DIAMETERS UPSTREAM OF ALL PIPE FITTINGS, THERMAL WELLS, AND OTHER OBSTRUCTIONS.

FLOW METER DETAIL (9 / M-502)
NO SCALE

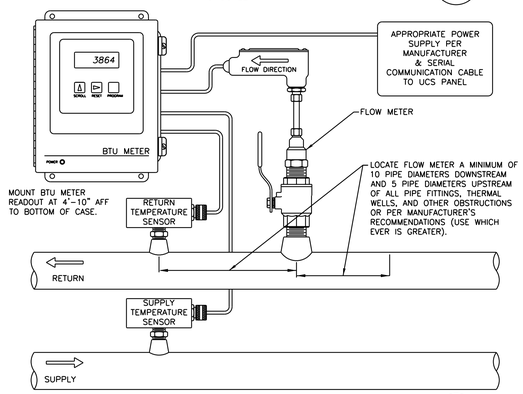

BTU METER DETAIL (10 / M-502)
NO SCALE

ALABAMA LICENSED NO. 25590 PROFESSIONAL ENGINEER DESIDERIO HERNANDEZ

WARNING
DO NOT SCALE THIS DRAWING
THIS DRAWING WAS DESIGNED TO BE PRINTED AT A NASA SHEET SIZE: MSFC STD. SIZE 40" X 28"

REV.	BY	DATE	REVISION	C.I. NO.	APPROVED

Marshall Space Flight Center
Huntsville, Alabama 35812

REVITALIZE BUILDING
MECHANICAL SYSTEMS (4755)
HVAC DETAILS

AE FIRM: GOODWYN | MILLS | CAWOOD — MERRICK & COMPANY — JOINT VENTURE

NASA AE CONTRACT NO.: NASA NNM12AA49C / NNM12AA68T

SUBMITTED: JENNIFER LANDRY	APPROVAL RECOMMENDED: ANDY ROLAND, A/E22 PROJECT A/E	APPROVED: JIMMY GUARIN	
AE: DATE: 11/04/13	APPROVAL RECOMMENDED: ANDY ROLAND, A/E22 SUPPORT A/E	A/E22 GROUP LEAD	DATE:
DESIGNED: J.MATTHEWS		DRAWING NO.	
DRAWN: J.MATTHEWS	APPROVAL RECOMMENDED: NELSON OLINGER, A/E22 TEAM LEAD	FAC-DA-4755-M502	
CHECKED: D.HERNANDEZ			
SCALE: NOT TO SCALE	SPEC. NO. FAC: M5057	SHEET __ OF __	

FINAL SUBMITTAL
ISSUED FOR CONSTRUCTION

SIGNATURES ON INDEX SHEET INDICATE ACCEPTANCE OF THIS SHEET

REF. NO. 29 OF 37 — M502

MSFC-FORM 232 REV. 8-21-95-RCL

MSFC Master Bid Disk 03-26-2014

AIR HANDLING UNIT SCHEDULE

PLAN MARK	SERVICE/LOCATION	OUTSIDE AIR MIN AIRFLOW (CFM)	SUPPLY FAN FLOW (CFM)	ESP (IN WG)	TSP (IN WG)	BRAKE (HP)	MOTOR (HP)	VOLT/PH/HZ	PREHEAT COIL DATA MAX. FACE (FPM)	MAX. APD (IN WG)	EAT DB (DEG F)	LAT DB (DEG F)	TOTAL CAP. (MBH)	FLUID FLOW (GPM)	EWT (DEG F)	LWT (DEG F)	MAX. W.P.D. (FT)	COOLING COIL DATA MAX. FACE (FPM)	MAX. APD (IN WG)	OUTSIDE DB (DEG F)	RETURN DB (DEG F)	MIXED AIR DB (DEG F)	LAT DB (DEG F)	SEN. CAP. (MBH)	LAT. CAP. (MBH)	TOTAL CAP. (MBH)	FLUID FLOW (GPM)	EWT (DEG F)	LWT (DEG F)	MAX. W.P.D. (FT)	AIR FILTER DATA TYPE PLEATED PRE	TYPE PLEATED FINAL	BASIS OF DESIGN	REMARKS
4755-AH0001	HIGH BAY AREA - 117 - A-12	0	1,800	0.50	1.25	0.5	1.0	460/3/60	500	0.50	65.0	95.0	58	3	140	100	15	500	0.50	94.6	80.0	80.0	55.0	64	4	68	14	44	54	15	MERV 8		JOHNSON CONTROLS	1,2,4,5,6,7,9,10
4755-AH0002	HIGH BAY AREA - 117 - B-12	0	1,800	0.50	1.25	0.5	1.0	460/3/60	500	0.50	65.0	95.0	58	3	140	100	15	500	0.50	94.6	80.0	80.0	55.0	64	4	68	14	44	54	15	MERV 8		JOHNSON CONTROLS	1,2,4,5,6,7,9,10
4755-AH0003	HIGH BAY AREA - 117 - C-12	0	1,800	0.50	1.25	0.5	1.0	460/3/60	500	0.50	65.0	95.0	58	3	140	100	15	500	0.50	94.6	80.0	80.0	55.0	64	4	68	14	44	54	15	MERV 8		JOHNSON CONTROLS	1,2,4,5,6,7,9,10
4755-AH0004	HIGH BAY AREA - 117 - D-12	1,600	1,800	0.50	1.25	0.5	1.0	460/3/60	500	0.50	65.0	95.0	141	7	140	100	15	500	0.50	94.6	80.0	93.0	55.0	64	4	68	14	44	54	15	MERV 8		JOHNSON CONTROLS	1,2,4,5,6,7,9,10
4755-AH0005	HIGH BAY AREA - 117 - E-12	1,600	1,800	0.50	1.25	0.5	1.0	460/3/60	500	0.50	65.0	95.0	141	7	140	100	15	500	0.50	94.6	80.0	93.0	55.0	64	4	68	14	44	54	15	MERV 8		JOHNSON CONTROLS	1,2,4,5,6,7,9,10
4755-AH0006	HIGH BAY AREA - 117 - F-12	0	1,800	0.50	1.25	0.5	1.0	460/3/60	500	0.50	65.0	95.0	58	3	140	100	15	500	0.50	94.6	80.0	80.0	55.0	64	4	68	14	44	54	15	MERV 8		JOHNSON CONTROLS	1,2,4,5,6,7,9,10
4755-AH0007	HIGH BAY AREA - 117 - G-12	0	1,800	0.50	1.25	0.5	1.0	460/3/60	500	0.50	65.0	95.0	58	3	140	100	15	500	0.50	94.6	80.0	80.0	55.0	64	4	68	14	44	54	15	MERV 8		JOHNSON CONTROLS	1,2,4,5,6,7,9,10
4755-AH0008	HIGH BAY AREA - 117 - A-8	0	1,800	0.50	1.25	0.5	1.0	460/3/60	500	0.50	65.0	95.0	58	3	140	100	15	500	0.50	94.6	80.0	80.0	55.0	64	4	68	14	44	54	15	MERV 8		JOHNSON CONTROLS	1,2,4,5,6,7,9,10
4755-AH0009	HIGH BAY AREA - 117 - B-8	0	1,800	0.50	1.25	0.5	1.0	460/3/60	500	0.50	65.0	95.0	58	3	140	100	15	500	0.50	94.6	80.0	80.0	55.0	64	4	68	14	44	54	15	MERV 8		JOHNSON CONTROLS	1,2,4,5,6,7,9,10
4755-AH0010	HIGH BAY AREA - 117 - C-8	0	1,800	0.50	1.25	0.5	1.0	460/3/60	500	0.50	65.0	95.0	58	3	140	100	15	500	0.50	94.6	80.0	80.0	55.0	64	4	68	14	44	54	15	MERV 8		JOHNSON CONTROLS	1,2,4,5,6,7,9,10
4755-AH0011	HIGH BAY AREA - 117 - D-8	0	1,800	0.50	1.25	0.5	1.0	460/3/60	500	0.50	65.0	95.0	58	3	140	100	15	500	0.50	94.6	80.0	80.0	55.0	64	4	68	14	44	54	15	MERV 8		JOHNSON CONTROLS	1,2,4,5,6,7,9,10
4755-AH0012	HIGH BAY AREA - 117 - E-8	0	1,800	0.50	1.25	0.5	1.0	460/3/60	500	0.50	65.0	95.0	58	3	140	100	15	500	0.50	94.6	80.0	80.0	55.0	64	4	68	14	44	54	15	MERV 8		JOHNSON CONTROLS	1,2,4,5,6,7,9,10
4755-AH0013	HIGH BAY AREA - 117 - F-8	0	1,800	0.50	1.25	0.5	1.0	460/3/60	500	0.50	65.0	95.0	58	3	140	100	15	500	0.50	94.6	80.0	80.0	55.0	64	4	68	14	44	54	15	MERV 8		JOHNSON CONTROLS	1,2,4,5,6,7,9,10
4755-AH0014	ROOMS 102A & 102B	0	2,225	1.00	2.00	1.0	1.5	460/3/60	500	0.50	65.0	95.0	72	4	140	100	15	500	0.50	94.6	80.0	80.0	55.0	60	34	94	19	44	54	15	MERV 8		JOHNSON CONTROLS	1,2,4,5,6,7,9,10,11
4755-AH0015	HIGH BAY AREA - 100 - G-5	0	3,400	0.50	1.25	1.0	1.0	460/3/60	500	0.50	65.0	95.0	110	6	140	100	15	500	0.50	94.6	80.0	80.0	55.0	123	12	135	27	44	54	15	MERV 8		JOHNSON CONTROLS	1,2,4,5,6,7,9,10,11
4755-AH0016	HIGH BAY AREA - 100 - B-5	0	3,400	0.50	1.25	1.0	2.0	460/3/60	500	0.50	65.0	95.0	110	6	140	100	15	500	0.50	94.6	80.0	80.0	56.0	123	12	135	27	44	54	15	MERV 8		JOHNSON CONTROLS	1,2,4,5,6,7,9,10,11
4755-AH0017	HIGH BAY AREA - 100 - C-5	0	3,400	0.50	1.25	1.0	3.0	460/3/60	500	0.50	65.0	95.0	110	6	140	100	15	500	0.50	94.6	80.0	80.0	57.0	123	12	135	27	44	54	15	MERV 8		JOHNSON CONTROLS	1,2,4,5,6,7,9,10,11
4755-AH0018	MECH ROOM - 109 (E-9)	800	4,000	2.50	5.00	4.6	7.5	460/3/60	500	1.00	17.0	55.0	119	6	140	100	15	500	0.50	94.6	80.0	82.9	55.0	115	45	160	32	44	54	15	MERV 8	MERV 13	JOHNSON CONTROLS	1,2,4,5,6,8,9,10,11
4755-AH0019	VESTIBULE - H-1	0	400	0.50	1.00	0.1	1/4	115/1/60	500	1.00	17.0	55.0	16	1	140	100	15	500	0.50	94.6	80.0	80.0	55.0	11	6	17	3	44	54	15	MERV 8		JOHNSON CONTROLS	1,2,4,5,6,9
4755-AH0021	HIGH BAY AREA - 100 - A-1	1,600	3,400	0.50	1.25	1.0	1.0	460/3/60	500	0.50	65.0	95.0	193	10	140	100	15	500	0.50	94.6	80.0	86.9	55.0	123	12	135	27	44	54	15	MERV 8		JOHNSON CONTROLS	1,2,4,5,6,7,9,10,11
4755-AH0022	HIGH BAY AREA - 100 - B-1	1,600	3,400	0.50	1.25	1.0	1.0	460/3/60	500	0.50	65.0	95.0	193	10	140	100	15	500	0.50	94.6	80.0	86.9	55.0	123	12	135	27	44	54	15	MERV 8		JOHNSON CONTROLS	1,2,4,5,6,7,9,10,11
4755-AH0023	HIGH BAY AREA - 100 - E-1	0	3,400	0.50	1.25	1.0	1.0	460/3/60	500	0.50	65.0	95.0	110	6	140	100	15	500	0.50	94.6	80.0	80.0	55.0	123	12	135	27	44	54	15	MERV 8		JOHNSON CONTROLS	1,2,4,5,6,7,9,10,11
4755-AH0024	HIGH BAY AREA - 100 - D-1	0	3,400	0.50	1.25	1.0	1.0	460/3/60	500	0.50	65.0	95.0	110	6	140	100	15	500	0.50	94.6	80.0	80.0	55.0	122	13	135	27	44	54	15	MERV 8		JOHNSON CONTROLS	1,2,4,5,6,7,9,10,11
4755-AH0025	BASEMENT	50	400	0.50	1.00	0.1	1/4	115/1/60	500	0.50	65.0	95.0	13	1	140	100	10	500	0.50	94.6	80.0	81.8	55.0	12	8	19	4	44	54	10	MERV 8		JOHNSON CONTROLS	1,2,4,5,6,9
4755-AH0030	VESTIBULE - A-3.5	0	400	0.50	1.00	0.1	1/4	115/1/60	500	0.50	65.0	95.0	11	1	140	100	15	500	0.50	94.6	80.0	80.0	55.0	11	6	17	3	44	54	15	MERV 8		JOHNSON CONTROLS	1,2,4,5,6,9
4755-AH0031	VESTIBULE - ROOM - 122B - B-1	0	400	0.50	1.00	0.1	1/4	115/1/60	500	0.50	65.0	95.0	11	1	140	100	15	500	0.50	94.6	80.0	80.0	55.0	11	6	17	3	44	54	15	MERV 8		JOHNSON CONTROLS	1,2,4,5,6,9
4755-AH0040	4TH FL EQUIP. ROOM - 400C (E-3)	2,320	8,050	2.00	3.00	5.6	7.5	460/3/60	500	0.50	17.0	55.0	269	13	140	100	15	500	0.50	94.6	80.0	84.2	55.0	293	95	388	78	44	54	15	MERV 8	MERV 13	JOHNSON CONTROLS	1,2,4,5,6,8,9,10,11
4755-AH0044	3RD FL EQUIP. ROOM - 400B (E-4)	1,120	4,900	2.00	4.50	5.1	10.0	460/3/60	500	0.50	17.0	55.0	152	8	140	100	15	500	0.50	94.6	80.0	83.3	55.0	137	54	191	38	44	54	15	MERV 8	MERV 13	JOHNSON CONTROLS	1,2,4,5,6,8,9,10,11
4755-AH0045	2ND FL EQUIP. ROOM - 400B (E-4)	1,430	6,400	2.00	4.50	6.7	10.0	460/3/60	500	0.50	17.0	55.0	197	10	140	100	15	500	0.50	94.6	80.0	83.3	55.0	180	69	249	50	44	54	15	MERV 8	MERV 13	JOHNSON CONTROLS	1,2,4,5,6,8,9,10,11

REMARKS:
1. ALL SELECTIONS BASED ON A SITE ELEVATION OF 643 FEET
2. COOLING & HEATING COIL CAPACITY BASED ON WATER (0% GLYCOL).
3. REDUNDANT UNIT SATISFYING N+1 REQUIREMENT.
4. ALL MOTORS WILL BE TOTALLY ENCLOSED, AIR OVER (TEAO).
5. ALL MOTORS WILL BE PREMIUM EFFICIENCY DESIGN.
6. PROVIDE 3 POUND MOLD RESISTANT INSULATION AND PERFORATED INNER LINER IN FAN SECTION.
7. PROVIDE BASE RAIL, AND RIGID MOUNT FANS FOR EXTERNAL ISOLATORS. PROVIDE EXTERNAL SPRING ISOLATION.
8. PROVIDE VARIABLE FREQUENCY DRIVE FOR FANS. MOTORS SHALL BE INVERTER DUTY RATED FOR USE WITH VFD, PER SPEC 26.
9. ESP INCLUDES COILS, DUCTWORK, AND AIR DEVICES EXTERIOR TO THE AHU AND A DIRTY FILTER ALLOWANCE, ABOUT 0.5" W.G. (1" FOR AHU-18,40,44,45.)
10. FACTORY MOUNT CONTROLS AND STARTERS (VFD OR SOLID STATE) WITH A SINGLE POINT POWER CONNECTION PROVIDED BY ELECTRICAL FOR EACH UNIT.
11. REQUIRED DUCT SMOKE DETECTOR

FAN SCHEDULE

PLAN MARK	TYPE	SERVICE	LOCATION	DRIVE	FLOW (CFM)	ESP (IN. W.G.)	BRAKE BRAKE (HP)	ELECTRICAL (HP)	VOLT/PH/HZ	MAX. SONES	REMARKS	DESIGN BASIS
4755-EAF0001	SIDE WALL PROPELLER	ELEC. EQUIP ROOM - 101 (E-5)	WALL OF ELEC. EQUIP ROOM - 101 (E-5)	DIRECT	1,500	0.75	0.54	3/4	115/1/60	- -	1-3,6,7,10	GREENHECK - SCE3-20-320-A
4755-EAF0002	BACKWARD INCLINED CENTRIFUGAL	RESTROOMS - 2ND, 3RD & 4TH	EQUIP. ROOM - 400C (E-3)	BELT	1,185	3.0	0.75	1.5	460/3/60	- -	1,3,4,6,7,11	GREENHECK - SWB-115-15
4755-EAF0003	INLINE	RESTROOMS - 1ST	ABOVE CEILING IN ROOM 102	DIRECT	1,000	1.25	0.47	1/2	115/1/60	- -	1,3,6,7,10	GREENHECK - SQ-120-VG

REMARKS:
1. ALL SELECTIONS BASED ON A SITE ELEVATION OF 643 FEET
2. PROVIDE EXPLOSION PROOF MOTOR.
3. SPARK RESISTANT CONSTRUCTION.
4. PROVIDE BELT AND MOTOR GUARD.
5. HEAT RECOVERY VENTILATOR, WITH AN ALUMINUM PLATE AIR-TO-AIR HEAT EXCHANGER.
6. PROVIDE PREMIUM EFFICIENCY MOTOR.
7. PROVIDE MOTOR OPERATED DAMPER.
8. PROVIDE EPOXY COATING.
9. PROVIDE INLET SCREEN, DISCHARGE DAMPER AND LOUVER.
10. FAN MOTOR IS TEAO
11. FAN MOTOR IS TEFC
12. PROVIDE VFD

AIR CURTAIN FANS SCHEDULE

PLAN MARK	LOCATION	SERVICE	EFFECTIVE DOOR WIDTH OPENING (FT.)	EFFECTIVE DOOR HEIGHT OPENING (FT.)	MAX. CFM	AVERAGE FPM AT NOZZLE	MAXIMUM FPM AT NOZZLE	LENGTH (IN.)	WEIGHT (LBS.)	INTERLOCK	MOTOR HP	PH	VOLT	VFD	REMARKS BASIS OF DESIGN:
4755-ACF0001	VESTIBULE - H-1	DOOR	3	7	900	- -	1,800	36	35	Y	1/6	1	115	N	MARS; MODEL LPV36-1U
4755-ACF0002	VESTIBULE - B-1	DOOR	3	7	900	- -	1,800	36	35	Y	1/6	1	115	N	MARS; MODEL LPV36-1U
4755-ACF0003	VESTIBULE - ROOM - 122B - A-3.5	DOOR	3	7	900	- -	1,800	36	35	Y	1/6	1	115	N	MARS; MODEL LPV36-1U

NOTES:
1. PROVIDE WITH OPTIONAL MOTOR CONTROL PANEL AND DOOR OPENING SENSING MICROSWITCH.
2. PROVIDE WITH EXTENDED WALL MOUNTING BRACKETS.

HYDRONIC UNIT HEATER SCHEDULE

PLAN MARK	TYPE	AREA SERVED	MINIMUM OUTPUT (BTUH)	SUPPLY FAN AIR FLOW (CFM)	MOTOR SIZE (HP)	MOTOR VOLT/PH/HZ	FLUID EAT DB (DEG F)	WATER FLOW (GPM)	EWT (DEG F)	LWT (DEG F)	MAX. P.D. (FT)	REMARKS	DESIGN BASIS
4755-UH0001	WALL MOUNTED	MECHANICAL EQUIPMENT (119)	11,200	340	1/60	120/1/60	50	0.6	140	100	10	1, 2	MODINE - HSB 18
4755-UH0002	WALL MOUNTED	MECHANICAL EQUIPMENT (119)	11,200	340	1/60	120/1/60	50	0.6	140	100	10	1, 2	MODINE - HSB 18

REMARKS:
1. ALL SELECTIONS BASED ON A SITE ELEVATION OF 643 FEET
2. HEATING CAPACITY BASED ON WATER (0% GLYCOL).

AIR SEPARATOR SCHEDULE

PLAN MARK	TYPE	SYSTEM SERVED	CAPACITY FLOW (GPM)	MINIMUM EFFICIENCY	MAX. PRESS DROP (PSI)	NOTES
4755-AS0001	CENTRIFUGAL	HEATING HOT WATER	163	90%	3.0	1,2

NOTES:
1. DO NOT PROVIDE STRAINER.
2. ASME LABELED

EXPANSION TANK SCHEDULE

PLAN MARK	TANK TYPE	SYSTEM	TOTAL VOLUME (GAL)	ACCEPTANCE VOLUME (GAL)	REMARKS	DESIGN BASIS
4755-ET0001	DIAPHRAGM	HEATING HOT WATER	68.0	34.0	1, 2	B&G - Series D-120

REMARKS:
1. ALL SELECTIONS BASED ON A SITE ELEVATION OF 643 FEET
2. AIR PRESSURE TO BE PROPERLY ADJUSTED TO CORRECT SYSTEM FILL PRESSURE.

ALABAMA LICENSED NO. 25590 PROFESSIONAL ENGINEER DESIDERIO HERNANDEZ

WARNING
DO NOT SCALE THIS DRAWING
THIS DRAWING WAS DESIGNED TO BE PRINTED AT A NASA SHEET SIZE: MSFC STD. SIZE 40" X 28"

REV.	BY	DATE	REVISION	C.I. NO.	APPROVED

Marshall Space Flight Center
Huntsville, Alabama 35812

REVITALIZE BUILDING
MECHANICAL SYSTEMS (4755)
MECHANICAL EQUIPMENT SCHEDULES

AE FIRM: GOODWYN | MILLS | CAWOOD — MERRICK & COMPANY — JOINT VENTURE

NASA AE CONTRACT NO. NASA: NNM12AA49C NNM12AA68T

SUBMITTED: JENNIFER LANDRY
APPROVAL RECOMMENDED: ANDY ROLAND, AS22 PROJECT A/E
APPROVED: JIMMY GUARIN, AS22 GROUP LEAD
AE: DATE: 11/04/13
APPROVAL RECOMMENDED: ANDY ROLAND, AS22 SUPPORT A/E
DESIGNED: J.MATTHEWS
DRAWN: J.MATTHEWS
CHECKED: D.HERNANDEZ
APPROVAL RECOMMENDED: NELSON OLINGER, AS22 TEAM LEAD
SCALE: NOT TO SCALE
SPEC. NO. FAC. M5057
DATE:
DRAWING NO. FAC-DA-4755-M601
SHEET __ OF __

FINAL SUBMITTAL
ISSUED FOR CONSTRUCTION

SIGNATURES ON INDEX SHEET INDICATE ACCEPTANCE OF THIS SHEET
REF. NO. 30 OF 37
M601

MSFC-FORM 232 REV. 8-21-99-RCL

MSFC Master Bid Disk 03-26-2014

VAV TERMINAL UNIT W/REHEAT COIL SCHEDULE

PLAN MARK	SERVICE/ LOCATION	COIL DATA MAX AIR FLOW (CFM)	MIN AIR FLOW (CFM)	MAX. FACE (FPM)	MAX. A.P.D (IN W.G.)	EAT DB (DEG F)	LAT DB (DEG F)	CAPACITY (MBH)	WATER OR ELECTRIC	KW	FLUID FLOW (GPM)	EWT (DEG F)	LWT (DEG F)	MAX. W.P.D (FT)	SOUND MAX SONES (RAD)	VALVE INLET SIZE (IN)	ELECTRICAL VOLT	PHASE	FREQ. (Hz.)	BASIS OF DESIGN	REMARKS
4755-VAV0001	FIRST FLOOR RESTROOMS	1,090	330	800	0.5	55	95	14.3	WATER	N/A	0.7	140	100	10	25	10	120	1	60	TRANE - VCWF10	AHU-18
4755-VAV0002	110A & 110B	235	75	800	0.5	55	95	3.2	WATER	N/A	0.5	140	127	10	25	05	120	1	60	TRANE - VCWF05	AHU-18
4755-VAV0003	110	195	60	800	0.5	55	95	2.6	WATER	N/A	0.5	140	130	10	25	04	120	1	60	TRANE - VCWF04	AHU-18
4755-VAV0004	110C	160	50	800	0.5	55	95	2.2	WATER	N/A	0.5	140	131	10	25	04	120	1	60	TRANE - VCWF04	AHU-18
4755-VAV0005	112	470	145	800	0.5	55	95	20.3	ELECTRIC	6.0	N/A	N/A	N/A	N/A	25	06	460	3	60	TRANE - VCWF06	AHU-18
4755-VAV0006	112A	120	40	800	0.5	55	95	1.7	WATER	N/A	0.5	140	133	10	25	04	120	1	60	TRANE - VCWF04	AHU-18
4755-VAV0007	114 & 114A	235	75	800	0.5	55	95	3.2	WATER	N/A	0.5	140	127	10	25	05	120	1	60	TRANE - VCWF05	AHU-18
4755-VAV0008	116	520	160	800	0.5	55	95	6.9	WATER	N/A	0.5	140	112	10	25	08	120	1	60	TRANE - VCWF08	AHU-18
4755-VAV0009	115	475	145	800	0.5	55	95	6.3	WATER	N/A	0.5	140	115	10	25	06	120	1	60	TRANE - VCWF06	AHU-18
4755-VAV0010	111 & 113	260	80	800	0.5	55	95	3.5	WATER	N/A	0.5	140	126	10	25	05	120	1	60	TRANE - VCWF05	AHU-18
4755-VAV0011	105	850	255	800	0.5	55	95	11.0	WATER	N/A	0.6	140	100	10	25	08	120	1	60	TRANE - VCWF08	AHU-18
4755-VAV0012	CORRIDOR & 103 & 103A	705	215	800	0.5	55	95	9.3	WATER	N/A	0.5	140	103	10	25	08	120	1	60	TRANE - VCWF08	AHU-18
4755-VAV0013	200 & 200A	325	100	800	0.5	55	95	4.3	WATER	N/A	0.5	140	123	10	25	05	120	1	60	TRANE - VCWF05	AHU-45
4755-VAV0014	201, 202, 203, 204, 205, 206 & CORR.	690	210	800	0.5	55	95	9.1	WATER	N/A	0.5	140	104	10	25	08	120	1	60	TRANE - VCWF08	AHU-45
4755-VAV0015	207, 208, 209 & 210	765	230	800	0.5	55	95	9.9	WATER	N/A	0.5	140	100	10	25	08	120	1	60	TRANE - VCWF08	AHU-45
4755-VAV0016	211, 212, 213 & 214	495	150	800	0.5	55	95	6.5	WATER	N/A	0.5	140	114	10	25	06	120	1	60	TRANE - VCWF06	AHU-45
4755-VAV0017	218	270	85	800	0.5	55	95	3.7	WATER	N/A	0.5	140	125	10	25	05	120	1	60	TRANE - VCWF05	AHU-45
4755-VAV0018	220 & 222A	225	70	800	0.5	55	95	3.0	WATER	N/A	0.5	140	128	10	25	04	120	1	60	TRANE - VCWF04	AHU-45
4755-VAV0019	200B	350	105	800	0.5	55	95	4.5	WATER	N/A	0.5	140	122	10	25	05	120	1	60	TRANE - VCWF05	AHU-45
4755-VAV0020	216 & CORRIDOR	165	50	800	0.5	55	95	2.2	WATER	N/A	0.5	140	131	10	25	04	120	1	60	TRANE - VCWF04	AHU-45
4755-VAV0021	215	800	240	800	0.5	55	95	10.4	WATER	N/A	0.5	140	100	10	25	08	120	1	60	TRANE - VCWF08	AHU-45
4755-VAV0022	217 & 223	460	140	800	0.5	55	95	6.0	WATER	N/A	0.5	140	116	10	25	06	120	1	60	TRANE - VCWF06	AHU-45
4755-VAV0023	222 & 222B	375	115	800	0.5	55	95	5.0	WATER	N/A	0.5	140	120	10	25	06	120	1	60	TRANE - VCWF06	AHU-45
4755-VAV0024	224	240	75	800	0.5	55	95	3.2	WATER	N/A	0.5	140	127	10	25	05	120	1	60	TRANE - VCWF05	AHU-45
4755-VAV0025	225, 227 & 231	255	80	800	0.5	55	95	3.5	WATER	N/A	0.5	140	126	10	25	05	120	1	60	TRANE - VCWF05	AHU-45
4755-VAV0026	236, 238 & CORRIDOR	690	210	800	0.5	55	95	9.1	WATER	N/A	0.5	140	104	10	25	08	120	1	60	TRANE - VCWF08	AHU-45
4755-VAV0027	226 & 228	535	165	800	0.5	55	95	7.1	WATER	N/A	0.5	140	111	10	25	08	120	1	60	TRANE - VCWF08	AHU-45
4755-VAV0028	229	240	75	800	0.5	55	95	3.2	WATER	N/A	0.5	140	127	10	25	05	120	1	60	TRANE - VCWF05	AHU-45
4755-VAV0029	234	305	95	800	0.5	55	95	4.1	WATER	N/A	0.5	140	124	10	25	05	120	1	60	TRANE - VCWF05	AHU-45
4755-VAV0030	232, 232A, 232B & CORRIDOR	880	265	800	0.5	55	95	11.4	WATER	N/A	0.6	140	100	10	25	08	120	1	60	TRANE - VCWF08	AHU-45
4755-VAV0031	327 & 329A	375	115	800	0.5	55	95	5.0	WATER	N/A	0.5	140	120	10	25	06	120	1	60	TRANE - VCWF06	AHU-44
4755-VAV0032	323 & 325	225	70	800	0.5	55	95	3.0	WATER	N/A	0.5	140	128	10	25	04	120	1	60	TRANE - VCWF04	AHU-44
4755-VAV0033	321 & 321A	375	115	800	0.5	55	95	5.0	WATER	N/A	0.5	140	120	10	25	06	120	1	60	TRANE - VCWF06	AHU-44
4755-VAV0034	301B & 329	510	155	800	0.5	55	95	6.7	WATER	N/A	0.5	140	113	10	25	08	120	1	60	TRANE - VCWF08	AHU-44
4755-VAV0035	301C, 331 & 333	295	90	800	0.5	55	95	3.9	WATER	N/A	0.5	140	124	10	25	05	120	1	60	TRANE - VCWF05	AHU-44
4755-VAV0036	301A	550	165	800	0.5	55	95	7.1	WATER	N/A	0.5	140	111	10	25	08	120	1	60	TRANE - VCWF08	AHU-44
4755-VAV0037	301	230	70	800	0.5	55	95	3.0	WATER	N/A	0.5	140	128	10	25	05	120	1	60	TRANE - VCWF05	AHU-44
4755-VAV0038	303 & 305	310	95	800	0.5	55	95	4.1	WATER	N/A	0.5	140	124	10	25	05	120	1	60	TRANE - VCWF05	AHU-44
4755-VAV0039	307, 309, 311, 313B & CORRIDOR	740	225	800	0.5	55	95	9.7	WATER	N/A	0.5	140	101	10	25	08	120	1	60	TRANE - VCWF08	AHU-44
4755-VAV0040	302, 304, 306, 320, 322 & 324	370	115	800	0.5	55	95	5.0	WATER	N/A	0.5	140	120	10	25	06	120	1	60	TRANE - VCWF06	AHU-44
4755-VAV0041		–	–	–	–	–	–	–	–	–	–	–	–	–	–	–	–	–	–	–	NOT USED
4755-VAV0042	317, 319 & 321B	445	135	800	0.5	55	95	5.8	WATER	N/A	0.5	140	117	10	25	06	120	1	60	TRANE - VCWF06	AHU-44
4755-VAV0043	308, 310, 312, 314, 316 & 318	420	130	800	0.5	55	95	5.6	WATER	N/A	0.5	140	118	10	25	06	120	1	60	TRANE - VCWF06	AHU-44
4755-VAV0044		–	–	–	–	–	–	–	–	–	–	–	–	–	–	–	–	–	–	–	NOT USED
4755-VAV0045		–	–	–	–	–	–	–	–	–	–	–	–	–	–	–	–	–	–	–	NOT USED
4755-VAV0046	313 & 313A	505	155	800	0.5	55	95	6.7	WATER	N/A	0.5	140	113	10	25	08	120	1	60	TRANE - VCWF08	AHU-44
4755-VAV0047		–	–	–	–	–	–	–	–	–	–	–	–	–	–	–	–	–	–	–	NOT USED
4755-VAV0048	400	1,365	410	800	0.5	55	95	59.0	ELECTRIC	17.3	N/A	N/A	N/A	N/A	25	10	460	3	60	TRANE - VCWF10	AHU-40
4755-VAV0049	401 & 403A	315	95	800	0.5	55	95	4.1	WATER	N/A	0.5	140	124	10	25	05	120	1	60	TRANE - VCWF05	AHU-40
4755-VAV0050	400A, 402, 404 & CORRIDOR	845	255	800	0.5	55	95	11.0	WATER	N/A	0.6	140	100	10	25	08	120	1	60	TRANE - VCWF08	AHU-40
4755-VAV0051	403B & 403C	395	120	800	0.5	55	95	5.2	WATER	N/A	0.5	140	119	10	25	06	120	1	60	TRANE - VCWF06	AHU-40
4755-VAV0052	403-1, 403-2 & 403-3	445	135	800	0.5	55	95	5.8	WATER	N/A	0.5	140	117	10	25	06	120	1	60	TRANE - VCWF06	AHU-40
4755-VAV0053	407C-1, 407C-2 & 407C-3	270	85	800	0.5	55	95	3.7	WATER	N/A	0.5	140	125	10	25	05	120	1	60	TRANE - VCWF05	AHU-40
4755-VAV0054	407C-4, 407C-5, 407C-6 & 407C-7	825	250	800	0.5	55	95	10.8	WATER	N/A	0.5	140	100	10	25	08	120	1	60	TRANE - VCWF08	AHU-40
4755-VAV0055	403D, 403E & 403F	620	190	800	0.5	55	95	8.2	WATER	N/A	0.5	140	107	10	25	08	120	1	60	TRANE - VCWF08	AHU-40
4755-VAV0056	403-4, 403-5, 403-6 & 403-7	775	235	800	0.5	55	95	10.2	WATER	N/A	0.5	140	100	10	25	08	120	1	60	TRANE - VCWF08	AHU-40
4755-VAV0057	407D	735	225	800	0.5	55	95	9.7	WATER	N/A	0.5	140	101	10	25	08	120	1	60	TRANE - VCWF08	AHU-40
4755-VAV0058	407, 407A & 407B	900	270	800	0.5	55	95	11.7	WATER	N/A	0.6	140	100	10	25	08	120	1	60	TRANE - VCWF08	AHU-40
4755-VAV0059	405	465	140	800	0.5	55	95	6.0	WATER	N/A	0.5	140	116	10	25	06	120	1	60	TRANE - VCWF06	AHU-40
4755-VAV0060	315	850	255	800	0.5	55	95	11.0	WATER	N/A	0.6	140	100	10	25	08	120	1	60	TRANE - VCWF08	AHU-44
4755-VAV0061	315D & 315E	450	135	800	0.5	55	95	5.8	WATER	N/A	0.5	140	117	10	25	06	120	1	60	TRANE - VCWF06	AHU-44
4755-VAV0062	315F	275	85	800	0.5	55	95	3.7	WATER	N/A	0.5	140	125	10	25	05	120	1	60	TRANE - VCWF05	AHU-44
4755-VAV0063	315C & CORRIDOR	550	165	800	0.5	55	95	7.1	WATER	N/A	0.5	140	111	10	25	08	120	1	60	TRANE - VCWF08	AHU-44
4755-VAV0064	315A & 315B	380	115	800	0.5	55	95	5.0	WATER	N/A	0.5	140	120	10	25	06	120	1	60	TRANE - VCWF06	AHU-44

NOTES:
1. 8 ROW, 12 FPI MAX.
2. PROVIDE INTEGRAL STEP DOWN TRANSFORMERS FOR VAV BOXES.
3. PROVIDE UNITS WITH INTERGRAL DISCONNECT SWITCH AND CONTROL TRANSFORMER FOR SINGLE POINT POWER CONNECTION.
4. MINIMUM STRAIGHT INEL TO BE AT LEAST 2 TIMES INLET SIZE.
5. PROVIDE ELECTRICAL REHEAT FOR ALL CONFERENCE ROOM VAV BOXES, SIZE REHEAT FOR MAXIMUM CFM FLOW RATE.

DUCTLESS SPLIT-SYSTEM AIR CONDITIONING UNIT SCHEDULE

PLAN MARK	INDOOR UNIT DATA AIR FLOW (CFM)	COOLING MINIMUM CAPACITY (BTUH)	ENT. DB/WB (DEG F)	LVG. DB (DEG F)	ELECTRIC HEAT (KW)	ELECTRIC DATA BREAKER SIZE (AMPS)	VOLT/PH/HZ	OUTDOOR UNIT DATA PLAN MARK	AMBIENT AIR TEMP. (DEG F)	ELECTRICAL DATA MOCP	MCA	VOLT/PH/HZ	BASIS OF DESIGN	REMARKS
4755-DXAC0001	775	24,000	80/67	57	2.33	25.0	208-230/1/60	4755-DXAC0001	95.0	30	18.0	208-230/1/60	MITSUBISHI - P-SERIES	1, 2, 3, 4, 5, 6
4755-DXAC0002	775	24,000	80/67	57	2.33	25.0	208-230/1/60	4755-DXAC0002	95.0	30	18.0	208-230/1/60	MITSUBISHI - P-SERIES	1, 2, 3, 4, 5, 6

REMARKS:
1. ALL SELECTIONS BASED ON A SITE ELEVATION OF 643 FEET
2. PROVIDE REMOTE PROGRAMMABLE THERMOSTAT/CONTROLLER WITH UNIT.
3. INDOOR AND OUTDOOR UNIT SHALL BE BY THE SAME MANUFACTURER.
4. UNIT TO BE HUNG ON SPRING VIBRATION ISOLATION DEVICES.
5. REFRIGERANT TO BE R-134 OR R-410A.
6. MOUNTING HEIGHT 8 FEET ABOVE FINISHED FLOOR UNLESS OTHERWISE NOTED.

PUMP SCHEDULE

PLAN MARK	SERVICE	CAPACITY (GPM)	TOT. HEAD (FT)	MOTOR (RPM)	HP	ELECTRICAL VOLT/PH/HZ	BASIS OF DESIGN	REMARKS
4755-CHWP0001	CHILLED WATER	330	110	1,750	20	460/3/60	B&G - Series 1510 - 4E	1,3,4
4755-CHWP0002	CHILLED WATER	330	110	1,750	20	460/3/60	B&G - Series 1510 - 4E	1,3,4
4755-CHWP0003	CHILLED WATER	330	110	1,750	20	460/3/60	B&G - Series 1510 - 4E	1,3,4
4755-HWP0001	HEATING HOT WATER	80	110	3,500	7.5	460/3/60	B&G - Series 1510 - 1-1/2AC	1,3,4
4755-HWP0002	HEATING HOT WATER	80	110	3,500	7.5	460/3/60	B&G - Series 1510 - 1-1/2AC	1,3,4
4755-HWP0003	HEATING HOT WATER	80	110	3,500	7.5	460/3/60	B&G - Series 1510 - 1-1/2AC	1,3,4

REMARKS:
1. FLOW CAPACITY BASED ON WATER (0% GLYCOL).
2. PROVIDE MAGNETIC STARTER WITH AUXILIARY CONTACTS AND HOA SWITCH ON ALL THREE PHASE MOTORS.
3. PROVIDE PREMIUM EFFICIENCY MOTORS.(RELIANCE SUPER E OR EQUIVALENT)
4. PROVIDE VARIABLE FREQUENCY DRIVE FOR MOTOR. MOTORS SHALL BE INVERTER DUTY RATED FOR USE WITH VFD, PER SPEC 26.

DIFFUSER, REGISTER AND GRILLE SCHEDULE

PLAN MARK	DUTY	DESCRIPTION	MODULE SIZE (INCHES)	NECK SIZE (INCHES)	AIRFLOW (CFM)	MATERIAL	FINISH	BASIS OF DESIGN	REMARKS
A	SUPPLY	SQUARE PLAQUE	24 x 24	6 Ø	0 - 150	ALUMINUM	-	PRICE - SPD	1,3
				8 Ø	151 - 300				
				10 Ø	301 - 400				
				12 Ø	401 - 550				
				14 Ø	551 - 950				
B	SUPPLY	HIGH CAPACITY DRUM LOUVERS	SEE PLANS	SEE PLANS	SEE PLANS	ALUMINUM	-	PRICE - HCD	2
C	SUPPLY	SQUARE PLAQUE	12 x 12	4 Ø	0 - 75	ALUMINUM	-	PRICE - SPD	1,3
				5 Ø	76 - 100				
				6 Ø	101 - 150				
				8 Ø	151 - 300				
D	RETURN OR EXHAUST	PERFORATED DIFFUSER	12 x 12	10 x 10	0 - 1000	ALUMINUM	-	PRICE - PDDR	1
			12 x 24	10 x 22	0 - 1800				
			24 x 24	22 x 22	0 - 4000				

REMARKS:
1. COORDINATE REQUIRED BORDER TYPE WITH CEILING SPECIFIED IN ARCHITECTURAL PLANS
2. PROVIDE DIFFUSER NECK MOUNTED VOLUME CONTROL DAMPER.
3. PROVIDE WITH INSULATED PLENUM

VARIABLE FREQUENCY DRIVE SCHEDULE

PLAN MARK	ASSOCIATED SYSTEM	MAX. HORSEPOWER (HP)	KVA RATING	ELECTRICAL VOLT	PHASE	FREQ. (Hz.)	INTERLOCK	REMARKS	DESIGN BASIS
4755-VFD0001	4755-CHWP0001	20.0		460	3	60		1, 2	Eaton H-Max - FS5
4755-VFD0002	4755-CHWP0002	20.0		460	3	60		1, 2	Eaton H-Max - FS5
4755-VFD0003	4755-CHWP0003	20.0		460	3	60		1, 2, 3	Eaton H-Max - FS5
4755-VFD0004	4755-HWP0001	7.5		460	3	60		1, 2	Eaton H-Max - FS4
4755-VFD0005	4755-HWP0002	7.5		460	3	60		1, 2	Eaton H-Max - FS4
4755-VFD0006	4755-HWP0003	7.5		460	3	60		1, 2	Eaton H-Max - FS4
4755-VFD0007	4755-AH0018	7.5		460	3	60		1, 2	Eaton H-Max - FS4
4755-VFD0008	4755-AH0040	7.5		460	3	60		1, 2	Eaton H-Max - FS5
4755-VFD0009	4755-AH0044	10.0		460	3	60		1, 2	Eaton H-Max - FS5
4755-VFD0010	4755-AH0045	10.0		460	3	60		1, 2	Eaton H-Max - FS5
4755-VFD0011	4755-SAF0001	2.0		460	3	60		1, 2	Eaton H-Max - FS4
4755-VFD0012	4755-RAF0001	1-1/2		460	3	60	4755-SAF0001	1, 2	Eaton H-Max - FS4

REMARKS:
1. ALL SELECTIONS BASED ON A SITE ELEVATION OF 643 FEET
2. MINIMUM OUTPUT FREQUENCY RANGE: 0 TO 120 HZ.
3. REASSIGNED NUMBER BECAUSE OF THE DEMO OF 4755-AH0020.

ALABAMA LICENSED NO. 25590 PROFESSIONAL ENGINEER DESIDERIO HERNANDEZ

WARNING
DO NOT SCALE THIS DRAWING
THIS DRAWING WAS DESIGNED TO BE PRINTED AT A NASA SHEET SIZE: MSFC STD. SIZE 40" X 28"

REV.	BY	DATE	REVISION	C.I. NO.	APPROVED

Marshall Space Flight Center
Huntsville, Alabama 35812

REVITALIZE BUILDING
MECHANICAL SYSTEMS (4755)
MECHANICAL EQUIPMENT SCHEDULES

AE FIRM: GOODWYN | MILLS | CAWOOD — MERRICK & COMPANY — JOINT VENTURE

NASA AE CONTRACT NO. NASA- NNM12AA49C NNM12AA68T

SUBMITTED: JENNIFER LANDRY
APPROVAL RECOMMENDED: ANDY ROLAND — AS22 PROJECT A/E
APPROVED: JIMMY GUARIN
AE: DATE: 11/04/13
APPROVAL RECOMMENDED: ANDY ROLAND — AS22 SUPPORT A/E
AS22 GROUP LEAD DATE:
DESIGNED J.MATTHEWS
DRAWN J.MATTHEWS
CHECKED D.HERNANDEZ
APPROVAL RECOMMENDED: NELSON OLINGER — AS22 TEAM LEAD
SCALE: NOT TO SCALE
SPEC. NO. FAC M5057
DRAWING NO. FAC-DA-4755-M602
SHEET __ OF __

FINAL SUBMITTAL
ISSUED FOR CONSTRUCTION

SIGNATURES ON INDEX SHEET INDICATE ACCEPTANCE OF THIS SHEET

REF. NO. 31 OF 37 M602

MSFC-FORM 232 REV. 8-21-89-RCL

MSFC Master Bid Disk 03-26-2014

SEQUENCE OF OPERATION

CHILLED WATER PUMPS CHWP-1, CHWP-2 & CHWP-3 WILL BE REMOTELY STARTED, STOPPED, AND MONITORED BY THE UCS SYSTEM THROUGH A SERIAL INTERFACE (BACNET).

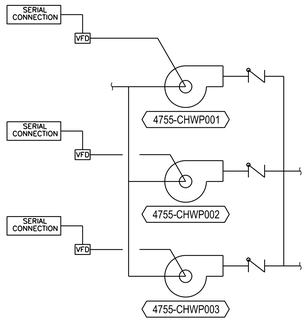

CHW PUMPS – CONTROL DIAGRAM

NO SCALE

1 M401 M701

SEQUENCE OF OPERATION

HEATING WATER PUMPS HWP-1, HWP-2 & HWP-3 WILL BE REMOTELY STARTED, STOPPED, AND MONITORED BY THE UCS SYSTEM THROUGH A SERIAL INTERFACE (BACNET).

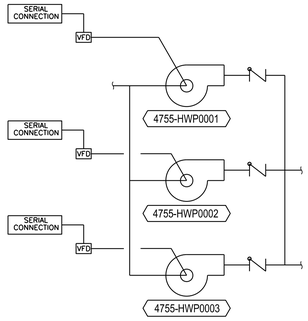

HW PUMPS – CONTROL DIAGRAM

NO SCALE

2 M401 M701

SEQUENCE OF OPERATION

THE UNIT HEATER FAN SHALL BE STARTED AND STOPPED BY A WALL MOUNTED THERMOSTAT LOCATED NEAR THE UNIT HEATER, AND SHALL MAINTAIN A SPACE TEMPERATURE SETPOINT OF 42 DEG F +/- 2 DEG F AS SENSED BY THE WALL MOUNTED THERMOSTAT.

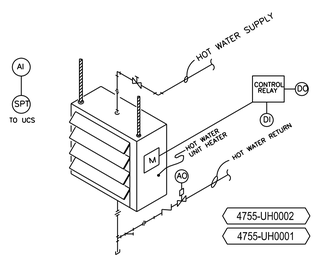

HW UNIT HEATER – CONTROL DIAGRAM

NO SCALE

3 M401 M701

SEQUENCE OF OPERATION

THE CHILLED WATER PUMP(S) SHALL BE REMOTELY STARTED AND STOPPED BY UCS.
THE CHILLED WATER SUPPLY TEMPERATURE SETPOINT SHALL BE REMOTELY ADJUSTABLE BY UCS.

THE FOLLOWING POINTS SHALL BE PROVIDED THROUGH THE SERIAL INTERFACE:

- CONTROL SYSTEM STATUS
- CHILLED WATER SUPPLY TEMPERATURE
- CHILLED WATER RETURN TEMPERATURE
- CHW SUPPLY SET POINT
- ON/OFF CONTROL

A DIFFERENTIAL PRESSURE SWITCH SHALL MONITOR CHILLED WATER PUMP(S) STATUS.

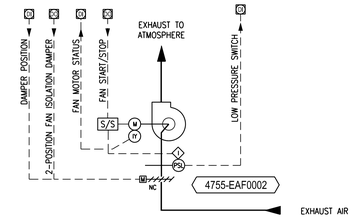

INLINE EXHAUST FAN – CONTROL DIAGRAM

NO SCALE

4 M202 M701

EXHAUST FAN – EAF0002

1. THE FAN SHALL BE INTERLOCKED TO RUN WHENEVER 4755-AH0018 OPERATES.
2. A MOTORIZED DAMPER SHALL OPEN WHEN THE FAN IS ON AND CLOSE WHEN THE FAN IS OFF.
3. UPON FAILURE OF THE FAN, TRANSMIT AN ALARM TO THE BAS.
4. A LOW STATIC CONDITION SHALL SHUTDOWN THE FAN AND TRANSMIT AN ALARM TO THE BAS.

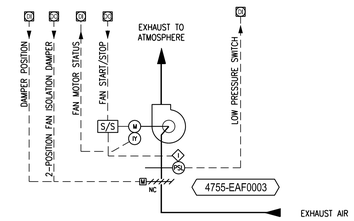

CENTRIFUGAL EXHAUST FAN – CONTROL DIAGRAM

NO SCALE

5 M206 M701

EXHAUST FAN – EAF0003

1. THE FAN SHALL BE INTERLOCKED TO RUN WHENEVER 4755-AH0040,4755-AH0044 AND 4755-AH0045 OPERATES.
2. A MOTORIZED DAMPER SHALL OPEN WHEN THE FAN IS ON AND CLOSE WHEN THE FAN IS OFF.
3. UPON FAILURE OF THE FAN, TRANSMIT AN ALARM TO THE BAS.
4. A LOW STATIC CONDITION SHALL SHUTDOWN THE FAN AND TRANSMIT AN ALARM TO THE BAS.

TT	TEMPERATURE TRANSMITTER		AVERAGING TYPE SENSOR
HT	HUMIDITY TRANSMITTER		FAN
SD	SMOKE DETECTOR		PRESSURE INDEPENDENT DOC CONTROL VALVE
AFMS	AIRFLOW MEASURING STATION	FT	FLOW TRANSMITTER
"PDT"	DIFFERENTIAL PRESSURE TRANSMITTER		PUMP
"PSL"	LOW PRESSURE SWITCH	KS	KEY SWITCH FOR DECONTAMINATION
"PSH"	HIGH PRESSURE SWITCH		HARD WIRED SYSTEM INTERLOCK
IT	CURRENT RELAY	HT	PRESSURE INDICATOR/TRANSMITTER
M	MOTOR	TIT	TEMPERATURE INDICATOR/TRANSMITTER
VFD	VARIABLE FREQUENCY DRIVE	PDI	DIFFERENTIAL PRESSURE INDICATOR
	HUMIDIFIER	KS	KEYSWITCH
	MOTORIZED DAMPER	AI, AO, DI, DO	CONTROL POINTS: AI = ANALOG INPUT; AO = ANALOG OUTPUT; DI = DIGITAL INPUT; DO = DIGITAL OUTPUT;
	FILTER BANK		
	HEATING COIL (STEAM OR HOT WATER)	CC	COOLING COIL
		HC	HEATING COIL
	COOLING COIL	NO	NORMALLY OPEN
		NC	NORMALLY CLOSED
	MANUAL BUBBLE TIGHT DAMPER (BTD)	BAS	BUILDING AUTOMATION SYSTEM
		DDC	DIRECT DIGITAL CONTROLS
S/S	MOTOR START/STOP	RS	RED STROBE
		YS	YELLOW STROBE
DW	DEW POINT TRANSMITTER	RPM	ROOM PRESSURE MONITOR
		-	-
FM	BTU FLOW METER	-	-
		-	-

ALABAMA LICENSED NO. 25590 PROFESSIONAL ENGINEER DESIDERIO HERNANDEZ

WARNING
DO NOT SCALE THIS DRAWING
THIS DRAWING WAS DESIGNED TO BE PRINTED AT A NASA SHEET SIZE: MSFC STD. SIZE 40" X 28"

REV.	BY	DATE	REVISION	C.I. NO.	APPROVED

Marshall Space Flight Center
Huntsville, Alabama 35812

REVITALIZE BUILDING
MECHANICAL SYSTEMS (4755)
MECHANICAL CONTROLS SEQUENCES

AE FIRM: GOODWYN MILLS CAWOOD / MERRICK & COMPANY — JOINT VENTURE

NASA AE CONTRACT NO.: NASA- NNM12AA49C NNM12AA68T

SUBMITTED: JENNIFER LANDRY
APPROVAL RECOMMENDED: ANDY ROLAND, AS22 PROJECT A/E
APPROVED: JIMMY GUARIN, AS22 GROUP LEAD

AE: DATE: 11/04/13
DESIGNED J.MATTHEWS
DRAWN J.MATTHEWS
CHECKED D.HERNANDEZ
SCALE: NOT TO SCALE
APPROVAL RECOMMENDED: ANDY ROLAND, AS22 SUPPORT A/E
APPROVAL RECOMMENDED: NELSON OLINGER, AS22 TEAM LEAD
SPEC. NO. FAC M5057
DATE:

DRAWING NO. FAC-DA-4755-M701
SHEET __ OF __

FINAL SUBMITTAL
ISSUED FOR CONSTRUCTION

SIGNATURES ON INDEX SHEET INDICATE ACCEPTANCE OF THIS SHEET

REF. NO. 32 OF 37 M701

MSFC-FORM 232 REV. 8-21-89-ROL

MSFC Master Bid Disk 03-26-2014

SINGLE ZONE CONSTANT VOLUME AIR HANDLER SEQUENCES OF OPERATION FOR HIGH BAY AREAS

1. THE AIR HANDLING UNIT WILL BE REMOTELY STARTED, STOPPED AND CONTROLLED BY THE UCS SYSTEM. EACH BAY INCLUDES TWO UNITS DEDICATED TO PROVIDING OUTSIDE AIR FOR VENTILATION REQUIREMENTS. AT LEAST ONE UNIT SHALL ALWAYS BE IN OPERATION DURING OCCUPIED HOURS.

2. UNIT STARTUP
UPON UNIT STARTUP THE OUTDOOR AIR DAMPERS (AS APPLICABLE) SHALL BE CLOSED AND THE RETURN DAMPER OPEN, THE FAN SHALL ENERGIZE, AND A TIMER WILL LOCK OUT ALL OTHER SEQUENCE OPERATIONS FOR 10 MIN (ADJ) TO ALLOW STABILIZATION OF AIR. AFTER THE LOCKOUT PERIOD THE UNIT SHALL BE ALLOWED TO OPERATE USING SENSOR VALUES AND SYSTEM CALCULATIONS. UNITS SHALL ENERGIZE, BEGINNING WITH ONE OF THE TWO (PER BAY) DEDICATED OUTSIDE AIR UNITS, ONE BY ONE, UNTIL ENOUGH UNITS ARE OPERATING TO SATISFY SPACE TEMPERATURE SETPOINT CONDITIONS.

3. SUPPLY TEMPERATURE SETPOINT RESET
UPON START UP THE SUPPLY AIR TEMPERATURE (SAT) SHALL BE BASED ON THE OUTDOOR AIR TEMPERATURE (OAT) AS SHOWN IN THE SAT RESET TABLE BELOW (ADJ). THE SAT WILL BE RESET ACCORDING TO THE ERROR BETWEEN THE SPACE TEMPERATURE AND THE SPACE TEMPERATURE SET POINT, BUT SHALL NOT BE SET LOWER THAN THE LOWEST VALUE SHOWN IN THE SAT RESET TABLE NOR HIGHER THAN 110F (ADJ).

4. SUPPLY AIR TEMPERATURE CONTROL
THE CHILLED WATER VALVE AND HOT WATER VALVE SHALL MODULATE TO MAINTAIN SUPPLY AIR TEMPERATURE SETPOINT. AT NO TIME SHALL THE CHILLED WATER AND HOT WATER VALVE BE OPEN AT THE SAME TIME.

5. FILTER STATUS
THE PRE-FILTER AND FINAL FILTER SHALL BE MONITORED FOR DIFFERENTIAL PRESSURE. THE UCS CONTROLLER SHALL SEND AN ALARM IF THE DIFFERENTIAL PRESSURE REACHES 0.25" FOR THE PRE-FILTER AND 0.50" FOR THE FINAL FILTER.

6. SMOKE DETECTION
IF THE RETURN AIR SMOKE DETECTOR OR SUPPLY AIR SMOKE DETECTOR DETECTS PRODUCTS OF COMBUSTION THE UNIT SHALL LOCALLY SHUT DOWN. THE SIGNAL WILL INTERLOCK & ALARM AT THE FIRE ALARM PANEL.

7. COIL PROTECTION
THE COIL PROTECTION SEQUENCE IS FOR THE PROTECTION OF EQUIPMENT AND SHALL TAKE PRECEDENCE OVER ALL SEQUENCES EXCEPT SMOKE DETECTION. IF THE MIXED AIR TEMPERATURE SENSOR (MXAT) DETECTS TEMPERATURES BELOW 50 F (ADJ) THE OUTDOOR AIR DAMPER SHALL BE CLOSED TO MAINTAIN 50 F (ADJ). IF THE LOW LIMIT THERMOSTAT (LLT)DETECTS THE MIXED AIR TEMPERATURE TO BE BELOW 40 DEGREES IT SHALL TURN THE FAN OFF AND THE UCS SYSTEM SHALL CLOSE ALL OUTDOOR AIR DAMPERS, OPEN THE CHILLED WATER VALVE, OPEN THE HOT WATER VALVE, AND TURN ON ANY ASSOCIATED PUMPS. THE SEQUENCE SHALL BE RELEASED IF THE OUTDOOR AIR TEMPERATURE RISES 5 DEGREES ABOVE THE RECORDED TEMPERATURE OF WHEN THE LLT WAS TRIPPED AND THE LLT IS RESET.

8. SHUT DOWN
IF A SHUT DOWN SEQUENCE IS INITIATED THE FAN SHALL TURN OFF, THE OUTDOOR AIR DAMPERS SHALL CLOSE , THE RETURN DAMPER SHALL OPEN, AND ALL VALVES SHALL CLOSE.

9. DISPLAYS
THE FOLLOWING CONTROL POINTS SHALL BE DISPLAYED ON THE AIR HANDLER DISPLAY AT UCS CONTROL: OUTDOOR AIR TEMPERATURE, OUTDOOR AIR RELATIVE HUMIDITY, OUTDOOR AIR ENTHALPY, OUTDOOR AIR DAMPER POSITION, RETURN AIR TEMPERATURE, RETURN AIR RELATIVE HUMIDITY, RETURN AIR ENTHALPY, MIXED AIR TEMPERATURE, PRE-FILTER PRESSURE, FINAL FILTER PRESSURE, COOLING COIL TEMPERATURE, COOLING COIL VALVE POSITION, HEATING COIL VALVE POSITION, FAN STATUS, SUPPLY AIR TEMPERATURE, SUPPLY AIR SETPOINT, SPACE TEMPERATURE, SPACE TEMPERATURE SETPOINT, SPACE PRESSURE, OCCUPIED/UNOCCUPIED MODE.

10. UNOCCUPIED/OCCUPIED MODE - VALUES SHALL BE CONFIRMED WITH USERS
UNOCCUPIED MODE SHALL BE DURING THE HOURS OF 6PM AND 6AM (ADJ). DURING THIS MODE THE SPACE TEMPERATURE SETPOINT SHALL BE 94 F (ADJ) IF THE OAT IS 60 F (ADJ) OR ABOVE; AND SHALL BE 52 F (ADJ) IF THE OAT IS BELOW 60 F (ADJ).
DURING UNOCCUPIED MODE THE MINUMUM OUTDOOR AIR DAMPER SHALL BE CLOSED AND THE FAN SEQUENCE SHALL BE OFF UNTIL THERE IS A NEED FOR HEATING OR COOLING.

OCCUPIED MODE SHALL BE BETWEEN THE HOURS OF 6AM AND 6PM (ADJ). DURING OCCUPIED MODE THE SPACE TEMPERATURE SETPOINT SHALL BE 74 F (ADJ) IF THE OAT IS 60 F (ADJ) OR ABOVE AND SHALL BE 72 F (ADJ) IF THE OAT IS BELOW 60 F (ADJ) AND THE OUTDOOR AIR SHALL BE CONTROLLED BY THE OUTDOOR AIR SEQUENCE.

11. MORNING WARMUP/COOLDOWN
UPON A MORNING START UP COMMAND BEING ISSUED THE UNIT SHALL RUN THE NORMAL START UP SEQUENCE. THE SPACE TEMPERATURE SETPOINT SHALL BE SET FROM THE UNOCCUPIED SETPOINT TO THE OCCUPIED SETPOINT.

12. BACKUP AIR HANDLING UNIT
IF ONE UNIT IS DETERMINED TO HAVE FAILED BY THE UCS AN ALARM SHALL BE SENT TO THE UCS AND THE REDUNDANT UNIT SHALL ENERGIZE BASED ON THE AIR HANDLING UNIT ROTATION SEQUENCE. AT LEAST ONE OF THE OUTSIDE AIR UNITS SHALL BE IN OPERATION.

13. AIR HANDLING UNIT ROTATION
AN ACCUMULATION OF AIR HANDLING UNIT RUN TIME HOURS FOR EACH UNIT SHALL BE KEPT IN LOCAL SYSTEM MEMORY AND USED TO DETERMINE AIR HANDLING UNIT SELECTION AND SHALL FUNCTION TO EQUALIZE RUN TIME HOURS BETWEEN UNITS. WHEN THE AIR HANDLING UNIT START/STOP ROUTINE IS REQUESTING A UNIT TO START, THE UNIT WITH THE LOWEST ACCUMULATED RUN TIME HOURS SHALL BE STARTED. RUN TIME HOURS SHALL BE EQUALIZED BETWEEN AIR HANDLING UNITS. AT LEAST ONE OF THE DEDICATED OUTSIDE AIR UNITS (PER BAY) SHALL ALWAYS BE IN OPERATION NO MATTER THE ROTATION SCHEDULE.

IF THE SELECTED AIR HANDLING UNIT FAILS TO START OR FAILS DURING OPERATION THE UNIT WITH THE NEXT LOWEST ACCUMULATED RUN TIME HOURS SHALL BE STARTED.

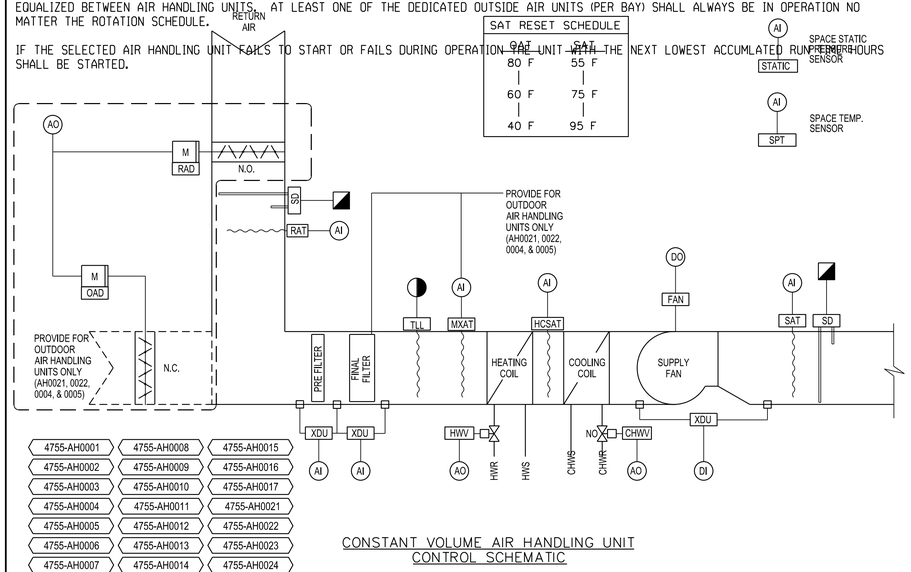

CONSTANT VOLUME AIR HANDLING UNIT CONTROL SCHEMATIC

MULTIPLE ZONE VARIABLE AIR VOLUME AIR HANDLING UNIT CONTROL SEQUENCES OF OPERATION

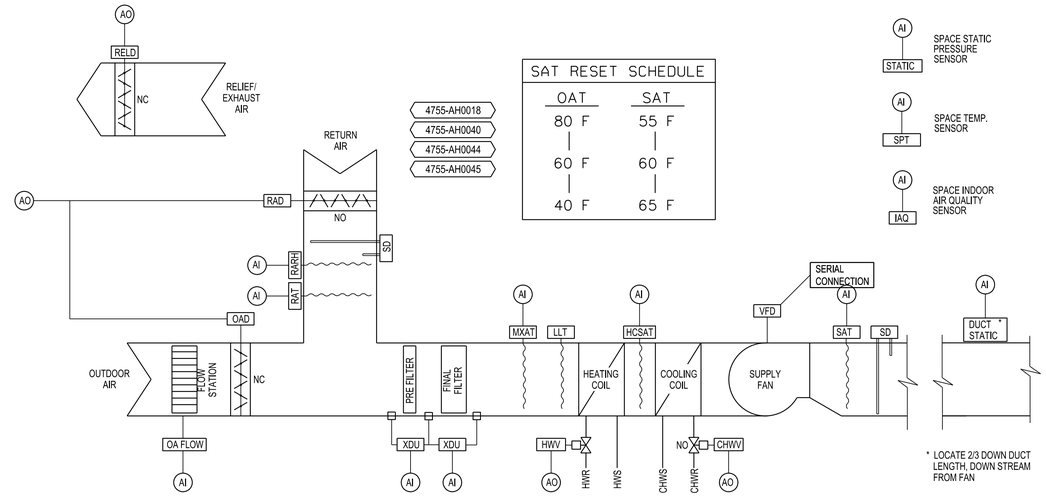

VARIABLE AIR VOLUME AIR HANDLING UNIT (OFFICE) CONTROL SCHEMATIC

N.T.S.

ALABAMA LICENSED NO. 25590 PROFESSIONAL ENGINEER DESIDERIO HERNANDEZ

WARNING
DO NOT SCALE THIS DRAWING
THIS DRAWING WAS DESIGNED TO BE PRINTED AT A NASA SHEET SIZE: MSFC STD. SIZE 40" X 28"

REV.	BY	DATE	REVISION	C.I. NO.	APPROVED

Marshall Space Flight Center
Huntsville, Alabama 35812

REVITALIZE BUILDING
MECHANICAL SYSTEMS (4755)
MECHANICAL CONTROLS SEQUENCES

AE FIRM: GOODWYN MILLS CAWOOD / MERRICK & COMPANY — JOINT VENTURE

NASA AE CONTRACT NO. NASA: NNM12AA49C NNM12AA68T

SUBMITTED: JENNIFER LANDRY
APPROVAL RECOMMENDED: ANDY ROLAND, AS22 PROJECT AE
APPROVED: JIMMY GUARIN, AS22 GROUP LEAD, DATE:
AE: DATE: 11/04/13
DESIGNED J.MATTHEWS
DRAWN J.MATTHEWS
CHECKED D.HERNANDEZ
APPROVAL RECOMMENDED: ANDY ROLAND, AS22 SUPPORT AE
APPROVAL RECOMMENDED: NELSON OLINGER, AS22 TEAM LEAD
SCALE: NOT TO SCALE
SPEC. NO. FAC M5057
DRAWING NO. FAC-DA-4755-M702
SHEET __ OF __

FINAL SUBMITTAL
ISSUED FOR CONSTRUCTION

SIGNATURES ON INDEX SHEET INDICATE ACCEPTANCE OF THIS SHEET

REF. NO. 33 OF 37 M702

MSFC-FORM 232 REV. 8-21-89-RCL

MSFC Master Bid Disk 03-26-2014

A | B | C | D | E | F | G

CONSTANT VOLUME SINGLE ZONE A/C SEQUENCES OF OPERATION FOR COMM. ROOMS

1. THE A/C UNIT WILL BE REMOTELY STARTED, STOPPED AND CONTROLLED BY THE UCS SYSTEM. UCS WILL CONTROL THE A/C THROUGH A 7/32 SMART 9/32 THERMOSTAT AND BACNET CONTROLLER THROUGH A MS-TP NETWORK INTERFACE.

2. UNIT STARTUP
UPON UNIT STARTUP THE FAN WILL START. THE UNIT SHALL BE ALLOWED TO OPERATE USING SENSOR VALUES AND SYSTEM CALCULATIONS.

3. SPACE TEMPERATURE CONTROL
IN COOLING MODE THE THERMOSTAT SHALL STAGE AND CYCLE COMPRESSOR(S) TO MEET THE DEMAND AS BASED ON THE OFFSET ERROR ON THE THERMOSTAT.

4. DISPLAYS
THE FOLLOWING CONTROL POINTS SHALL BE DISPLAYED ON THE AIR HANDLER DISPLAY AT UCS CONTROL: COOLING MODE, COOLING STAGES ON, SUPPLY AIR TEMPERATURE, SPACE TEMPERATURE, SPACE TEMPERATURE SETPOINT.

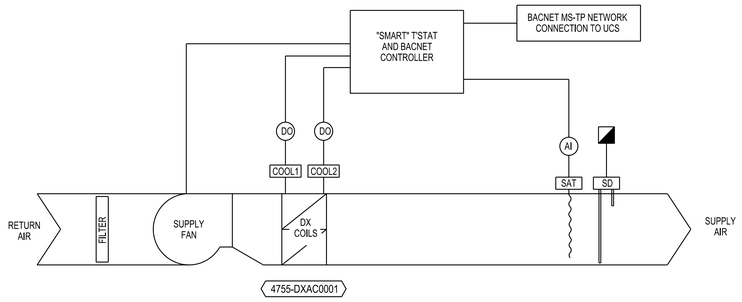

CONSTANT VOLUME, SINGLE ZONE AIR CONDITIONING UNIT

N.T.S.

AIR CURTAIN FAN SEQUENCE OF OPERATION

1. THE AIR CURTAIN FAN WILL BE ACTIVATED BY A DOOR SWITCH. THE DOOR SWITCH WILL OPEN THE CIRCUIT WHEN THE ASSOCIATED DOOR IS OPEN. THE UNIT WILL RUN FOR A SPECIFIED TIME PERIOD (ADJUSTABLE).

4755-ACF0001
4755-ACF0002
4755-ACF0003

FAN COIL UNIT - SEQUENCE OF OPERATION

THE FAN WILL BE REMOTELY STOPPED AND STARTED BY THE UCS SYSTEM. THE DDC CONTROLLER WILL MODULATED CHILLED WATER OR HOT WATER VALVES TO MAINTAIN A SPACE TEMPERATURE SETPOINT OF 75 DEG F +/- 5 DEG F AS SENSED BY SPACE TEMPERATURE SENSOR T1. A TWO-DEGREE DEAD BAND BETWEEN HEATING AND COOLING IS REQUIRED TO PREVENT CYCLING. SUPPLY AIR TEMPERATURE WILL BE TRANSMITTED TO THE DDC CONTROLLER BY A DUCT MOUNTED TEMPERATURE SENSOR T2 AND WILL BE DISPLAYABLE.

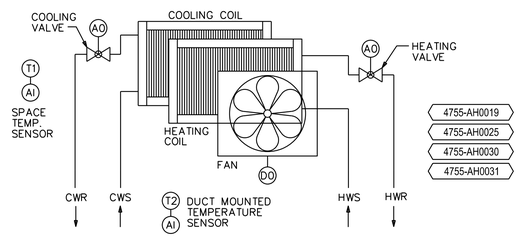

FOUR PIPE FAN COIL UNIT WITH DUAL COILS

N.T.S.

NOTE:

ALL AO,AI,DI AND DO POINTS ARE CONNECTED TO DDC CONTROLLER.

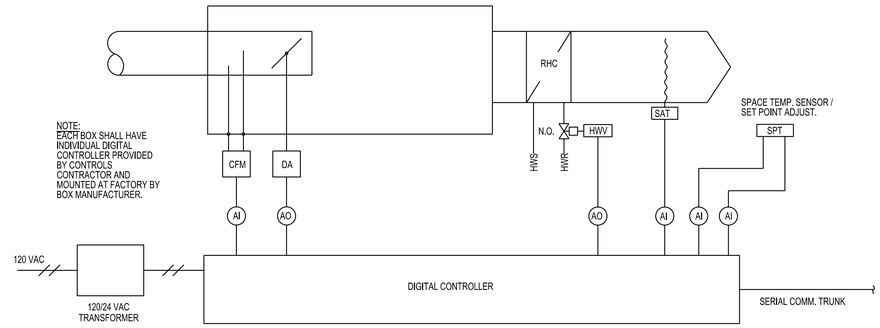

V.A.V. BOX CONTROL SCHEMATIC (TYPICAL ALL VAV BOXES)

N.T.S.

VAV BOX CONTROL SEQUENCES

1. THE VAV UNIT WILL BE CONTROLLED BY THE LOCAL VAV BOX CONTROLLER.

2. COOLING
IF THERE IS A CALL FOR COOLING, THE HOT WATER REHEAT VALVE SHALL BE CLOSED. THE VAV CONTROLLER SHALL MODULATE THE VAV DAMPER IN CONJUCTION WITH THE AIRFLOW SENSOR (CFM) BETWEEN THE MINIMUM AND MAXIMUM SCHEDULED AIRFLOWS TO MAINTAIN THE SPACE TEMPERATURE SETPOINT.

3. HEATING
IF THERE IS A CALL FOR HEATING, THE VAV DAMPER SHALL MODULATE TO ITS MINIMUM SCHEDULED AIRFLOW. THE VAV BOX CONTROLLER SHALL BEGIN MODULATING THE HOT WATER VALVE OPEN [OPTION: STAGING ELECTRIC HEAT] TO MAINTAIN SPACE TEMPERATURE SETPOINT.

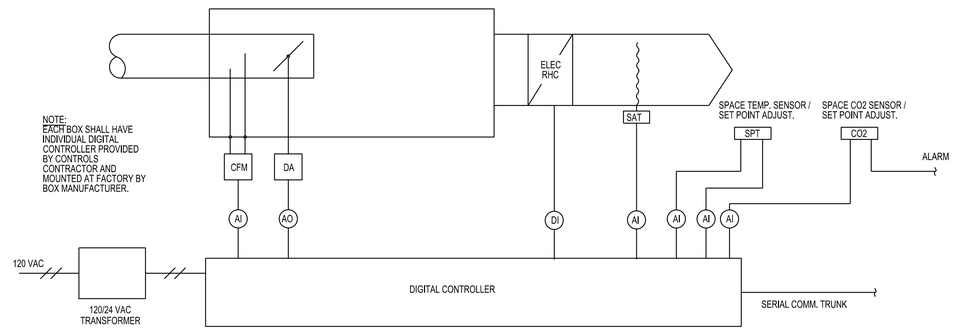

V.A.V. BOX CONTROL SCHEMATIC
(CONFERENCE ROOMS ONLY– ELECTRIC REHEAT)

N.T.S.

VAV BOX CONTROL SEQUENCES - CO2 SENSOR AND CONFERENCE ROOMS

1. THE VAV UNIT WILL BE CONTROLLED BY THE LOCAL VAV BOX CONTROLLER.

2. COOLING - IF THERE IS A CALL FOR COOLING, THE VAV CONTROLLER SHALL MODULATE THE VAV DAMPER IN CONJUNCTION WITH THE AIRFLOW SENSOR (CFM) BETWEEN THE MINIMUM AND MAXIMUM SCHEDULED AIRFLOWS TO MAINTAIN THE SPACE TEMPERATURE SETPOINT.

3. HEATING - IF THERE IS A CALL FOR HEATING, THE VAV DAMPER SHALL MODULATE TO ITS MINIMUM AIRFLOW. THE VAV BOX CONTROLLER SHALL ENERGIZE THE ELECTRIC HEATING COIL.

4. CO2 MONITORING AND ALARM, AT 1000 PPM THE SENSOR WILL ALARM AND OPEN THE DAMPER TO MAXIMUM POSITION.

WALL EXHAUST FAN – SEQUENCE OF OPREATION

THE EXHAUST FAN AND MOTORIZED EXHAUST DAMPER SHALL BE CONTROLLED BY A WALL MOUNTED THERMOSTAT LOCATED NEAR THE EXHAUST FAN. UPON A RISE IN SPACE TEMPERATURE, THE MOTORIZED DAMPER SHALL OPEN AND A POSITION SWITCH SHALL ACTIVATE THE FAN. UPON A FALL IN SPACE TEMPERATURE, THE MOTORIZED DAMPER SHALL CLOSE AND THE POSITION SWITCH SHALL DEACTIVATE THE FAN. THE WALL MOUNTED THERMOSTAT SHALL MAINTAIN A SPACE TEMPERATURE SETPOINT OF 85 DEG F +/– 2 DEG F.

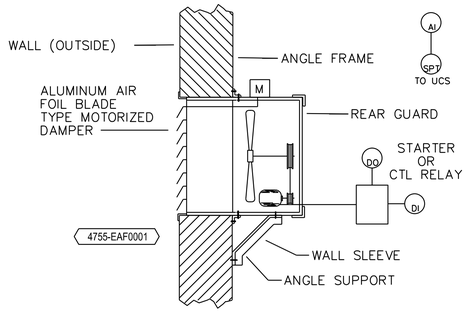

WALL EXHAUST FAN

N.T.S.

NOTE TO DESIGNER: ALL SUPPLY AND EXHAUST FANS GREATER THAN 400 CFM WILL BE PROVIDED WITH ALUMINUM, AIR FOIL TYPE, MOTORIZED DAMPERS. FANS LESS THAN 400 CFM USE GRAVITY DAMPERS.

ALABAMA LICENSED NO. 25590 PROFESSIONAL ENGINEER DESIDERIO HERNANDEZ

WARNING
DO NOT SCALE THIS DRAWING
THIS DRAWING WAS DESIGNED TO BE PRINTED AT A NASA SHEET SIZE: MSFC STD. SIZE 40" X 28"

REV.	BY	DATE	REVISION	C.I. NO.	APPROVED

Marshall Space Flight Center
Huntsville, Alabama 35812

REVITALIZE BUILDING
MECHANICAL SYSTEMS (4755)
MECHANICAL CONTROLS SEQUENCES

AE FIRM: GOODWYN | MILLS | CAWOOD & MERRICK & COMPANY JOINT VENTURE

NASA AE CONTRACT NO. NASA- NNM12AA49C NNM12AA68T

SUBMITTED: JENNIFER LANDRY
APPROVAL RECOMMENDED: ANDY ROLAND, AS22 PROJECT A/E
APPROVED: JIMMY GUARIN, AS22 GROUP LEAD, DATE:
AE: DATE: 11/04/13
APPROVAL RECOMMENDED: ANDY ROLAND, AS22 SUPPORT A/E
DESIGNED J.MATTHEWS
DRAWN J.MATTHEWS
CHECKED D.HERNANDEZ
APPROVAL RECOMMENDED: NELSON OLINGER, AS22 TEAM LEAD
SCALE: NOT TO SCALE
SPEC. NO. FAC M5057

FINAL SUBMITTAL
ISSUED FOR CONSTRUCTION

SIGNATURES ON INDEX SHEET INDICATE ACCEPTANCE OF THIS SHEET

REF. NO. 34 OF 37 M703

DRAWING NO. FAC-DA-4755-M703
SHEET __ OF __

MSFC-F-FORM 232 REV. 8-2149-WCL

MSFC Master Bid Disk 03-26-2014

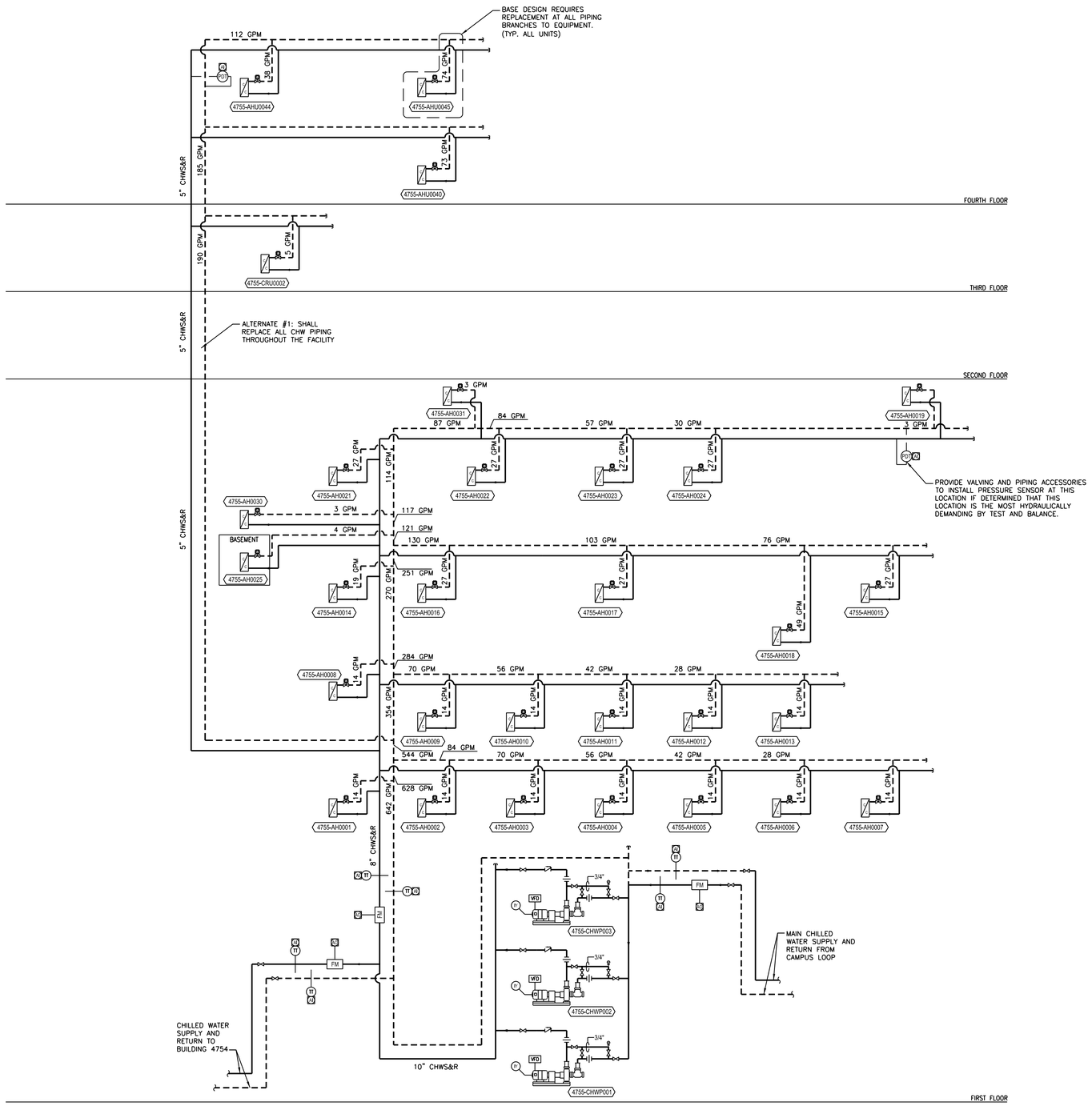

CHILLED WATER PIPING SCHEMATIC / CONTROL DIAGRAM

NO SCALE

1 / M704

GENERAL NOTES

A. CONTROL POINTS INDICATED IN SCHEMATICS ARE FOR REFERENCE ONLY - ALL REQUIRED CONTROL POINTS MAY NOT BE SHOWN. IT IS THE INTENT THAT A FULLY FUNCTIONAL CONTROL SYSTEM BE PROVIDED TO OPERATE AS DESCRIBED.

B. NOT ALL PIPE TRANSITION SIZES ARE SHOWN, MAIN PIPE BRANCH, AND APPLIANCE SUPPLY SIZES ARE SHOWN.

CHILLED WATER – CONTROL VALVE SCHEDULE

MARK	LOCATION (ROOM)	FLUID FLOW RATE (GPM)	Cv***	HEAD LOSS (FT)	NORMAL/FAIL POSITION	CONNECT SIZE (IN)	NOTES
CV-4755-AH0001-1	HIGH BAY AREA – 117 – A-12	13.6	5.3	15	OPEN/CLOSE	1-1/4	1
CV-4755-AH0002-1	HIGH BAY AREA – 117 – B-12	13.6	5.3	15	OPEN/CLOSE	1-1/4	1
CV-4755-AH0003-1	HIGH BAY AREA – 117 – C-12	13.6	5.3	15	OPEN/CLOSE	1-1/4	1
CV-4755-AH0004-1	HIGH BAY AREA – 117 – D-12	13.6	5.3	15	OPEN/CLOSE	1-1/4	1
CV-4755-AH0005-1	HIGH BAY AREA – 117 – E-12	13.6	5.3	15	OPEN/CLOSE	1-1/4	1
CV-4755-AH0006-1	HIGH BAY AREA – 117 – F-12	13.6	5.3	15	OPEN/CLOSE	1-1/4	1
CV-4755-AH0007-1	HIGH BAY AREA – 117 – G-12	13.6	5.3	15	OPEN/CLOSE	1-1/4	1
CV-4755-AH0008-1	HIGH BAY AREA – 117 – A-8	13.6	5.3	15	OPEN/CLOSE	1-1/4	1
CV-4755-AH0009-1	HIGH BAY AREA – 117 – B-8	13.6	5.3	15	OPEN/CLOSE	1-1/4	1
CV-4755-AH0010-1	HIGH BAY AREA – 117 – C-8	13.6	5.3	15	OPEN/CLOSE	1-1/4	1
CV-4755-AH0011-1	HIGH BAY AREA – 117 – D-8	13.6	5.3	15	OPEN/CLOSE	1-1/4	1
CV-4755-AH0012-1	HIGH BAY AREA – 117 – E-8	13.6	5.3	15	OPEN/CLOSE	1-1/4	1
CV-4755-AH0013-1	HIGH BAY AREA – 117 – F-8	13.6	5.3	15	OPEN/CLOSE	1-1/4	1
CV-4755-AH0014-1	ROOMS 102A & 102B	18.8	7.4	15	OPEN/CLOSE	1-1/2	1
CV-4755-AH0015-1	HIGH BAY AREA – 100 – G-5	27.0	10.6	15	OPEN/CLOSE	2	1
CV-4755-AH0016-1	HIGH BAY AREA – 100 – B-5	27.0	10.6	15	OPEN/CLOSE	2	1
CV-4755-AH0017-1	HIGH BAY AREA – 100 – C-5	27.0	10.6	15	OPEN/CLOSE	2	1
CV-4755-AH0018-1	MECH ROOM – 109 (E-9)	32.0	12.6	15	OPEN/CLOSE	2	1
CV-4755-AH0019-1	VESTIBULE – H-1	3.4	1.3	15	OPEN/CLOSE	3/4	1
CV-4755-AH0021-1	HIGH BAY AREA – 100 – A-1	27.0	10.6	15	OPEN/CLOSE	2	1
CV-4755-AH0022-1	HIGH BAY AREA – 100 – B-1	27.0	10.6	15	OPEN/CLOSE	2	1
CV-4755-AH0023-1	HIGH BAY AREA – 100 – E-1	27.0	10.6	15	OPEN/CLOSE	2	1
CV-4755-AH0024-1	HIGH BAY AREA – 100 – D-1	27.0	10.6	15	OPEN/CLOSE	2	1
CV-4755-AH0025-1	BASEMENT	3.9	1.9	10	OPEN/CLOSE	3/4	1
CV-4755-AH0030-1	VESTIBULE – A-3.5	3.4	1.3	15	OPEN/CLOSE	3/4	1
CV-4755-AH0031-1	VESTIBULE – ROOM – 122B – B-1	3.4	1.3	15	OPEN/CLOSE	3/4	1
CV-4755-AH0040-1	4TH FL EQUIP. ROOM – 400C (E-3)	77.5	30.4	15	OPEN/CLOSE	3	1
CV-4755-AH0044-1	3RD FL EQUIP. ROOM – 400B (E-4)	38.3	15.0	15	OPEN/CLOSE	2	1
CV-4755-AH0045-1	2ND FL EQUIP. ROOM – 400B (E-4)	49.7	19.5	15	OPEN/CLOSE	2-1/2	1

*** Cv = GPM * SQRT(1/△P), WHERE P = CHANGE IN PRESSURE (PSI). Cv IS IN CUSTOMARY UNITS.

NOTES:
1. 2-WAY MODULATING CONTROL VALVE, WITH ELECTRIC ACTUATION.
2. 3-WAY CONTROL VALVE, WITH ELECTRIC ACTUATION.

ALABAMA LICENSED NO. 25590 PROFESSIONAL ENGINEER DESIDERIO HERNANDEZ

WARNING
DO NOT SCALE THIS DRAWING
THIS DRAWING WAS DESIGNED TO BE PRINTED AT A NASA SHEET SIZE: MSFC STD. SIZE 40" X 28"

REV.	BY	DATE	REVISION	C.I. NO.	APPROVED

Marshall Space Flight Center
Huntsville, Alabama 35812

REVITALIZE BUILDING
MECHANICAL SYSTEMS (4755)
MECHANICAL CONTROLS CHILLED WATER SCHEMATIC

AE FIRM: GOODWYN MILLS CAWOOD / MERRICK & COMPANY — JOINT VENTURE

NASA AE CONTRACT NO. NASA: NNM12AA49C NNM12AA68T

SUBMITTED: JENNIFER LANDRY
APPROVAL RECOMMENDED: ANDY ROLAND, AS22 PROJECT A/E
APPROVED: JIMMY GUARIN
AE: DATE: 11/04/13
APPROVAL RECOMMENDED: ANDY ROLAND, AS22 SUPPORT A/E
AS22 GROUP LEAD DATE:
DESIGNED J.MATTHEWS
DRAWN J.MATTHEWS
CHECKED D.HERNANDEZ
APPROVAL RECOMMENDED: NELSON OLINGER, AS22 TEAM LEAD
DRAWING NO. FAC-DA-4755-M704
SCALE: NOT TO SCALE
SPEC. NO. FAC M5057
SHEET __ OF __

FINAL SUBMITTAL
ISSUED FOR CONSTRUCTION

SIGNATURES ON INDEX SHEET INDICATE ACCEPTANCE OF THIS SHEET

REF. NO. 35 OF 37 M704

MSFC-FORM 232 REV. 6-21-95/ROL

MSFC Master Bid Disk 03 26 2014

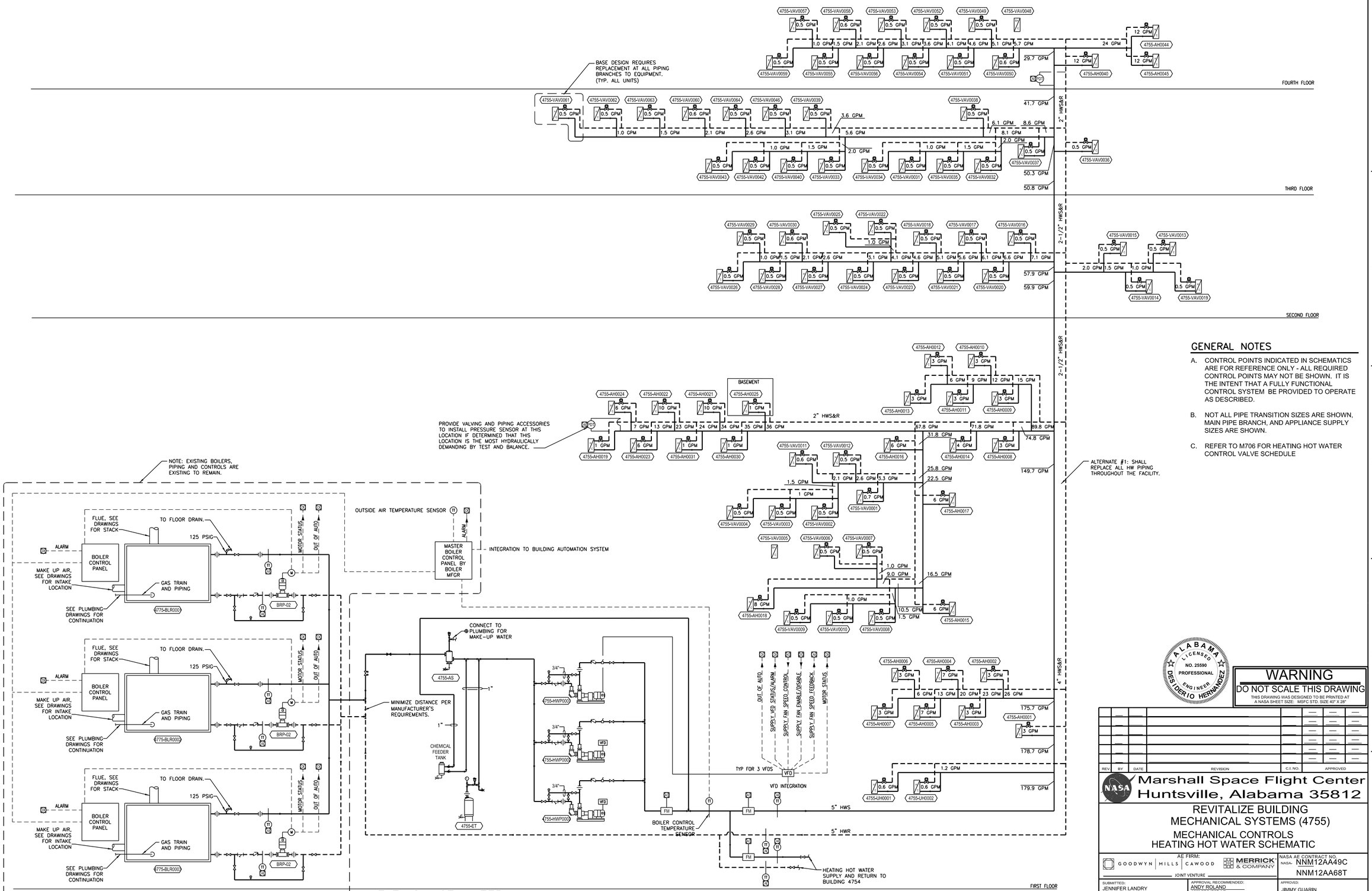

GENERAL NOTES

A. CONTROL POINTS INDICATED IN SCHEMATICS ARE FOR REFERENCE ONLY - ALL REQUIRED CONTROL POINTS MAY NOT BE SHOWN. IT IS THE INTENT THAT A FULLY FUNCTIONAL CONTROL SYSTEM BE PROVIDED TO OPERATE AS DESCRIBED.

B. NOT ALL PIPE TRANSITION SIZES ARE SHOWN, MAIN PIPE BRANCH, AND APPLIANCE SUPPLY SIZES ARE SHOWN.

C. REFER TO M706 FOR HEATING HOT WATER CONTROL VALVE SCHEDULE

HEATING HOT WATER PIPING SCHEMATIC / CONTROL DIAGRAM

1 / M703

NO SCALE

FINAL SUBMITTAL

ISSUED FOR CONSTRUCTION

SIGNATURES ON INDEX SHEET INDICATE ACCEPTANCE OF THIS SHEET

REF. NO. 36 OF 37

M705

ALABAMA LICENSED NO. 25590 PROFESSIONAL ENGINEER DESIDERIO HERNANDEZ

WARNING

DO NOT SCALE THIS DRAWING

THIS DRAWING WAS DESIGNED TO BE PRINTED AT A NASA SHEET SIZE: MSFC STD. SIZE 40" X 28"

REV	BY	DATE	REVISION	C.I. NO.	APPROVED

Marshall Space Flight Center
Huntsville, Alabama 35812

REVITALIZE BUILDING
MECHANICAL SYSTEMS (4755)
MECHANICAL CONTROLS
HEATING HOT WATER SCHEMATIC

AE FIRM: GOODWYN MILLS CAWOOD / MERRICK & COMPANY JOINT VENTURE

NASA AE CONTRACT NO. NASA- NNM12AA49C NNM12AA68T

SUBMITTED: JENNIFER LANDRY
APPROVAL RECOMMENDED: ANDY ROLAND, AS22 PROJECT A/E
APPROVED: JIMMY GUARIN
AE: DATE: 11/04/13
DESIGNED J.MATTHEWS
DRAWN J.MATTHEWS
CHECKED D.HERNANDEZ
APPROVAL RECOMMENDED: ANDY ROLAND, AS22 SUPPORT A/E
AS22 GROUP LEAD DATE:
APPROVAL RECOMMENDED: NELSON OLINGER, AS22 TEAM LEAD
SCALE: NOT TO SCALE
SPEC. NO. FAC M5057
DRAWING NO. FAC-DA-4755-M705
SHEET __ OF __

MSFC-F-FORM 232 REV. 6-21-89-ROL

MSFC Master Bid Disk 03 26 2014

HEATING WATER – CONTROL VALVE SCHEDULE

MARK	AREA SERVED LOCATION (ROOM)	FLUID FLOW RATE (GPM)	Cv***	HEAD LOSS (FT)	NORMAL/FAIL POSITION	CONNECT SIZE (IN)	NOTES
CV-4755-AH0001-2	HIGH BAY AREA – 117 – A-12	2.9	1.1	15	CLOSE/OPEN	3/4	1
CV-4755-AH0002-2	HIGH BAY AREA – 117 – B-12	2.9	1.1	15	CLOSE/OPEN	3/4	1
CV-4755-AH0003-2	HIGH BAY AREA – 117 – C-12	2.9	1.1	15	CLOSE/OPEN	3/4	1
CV-4755-AH0004-2	HIGH BAY AREA – 117 – D-12	7.1	2.8	15	CLOSE/OPEN	1-1/4	1
CV-4755-AH0005-2	HIGH BAY AREA – 117 – E-12	7.1	2.8	15	CLOSE/OPEN	1-1/4	1
CV-4755-AH0006-2	HIGH BAY AREA – 117 – F-12	2.9	1.1	15	CLOSE/OPEN	3/4	1
CV-4755-AH0007-2	HIGH BAY AREA – 117 – G-12	2.9	1.1	15	CLOSE/OPEN	3/4	1
CV-4755-AH0008-2	HIGH BAY AREA – 117 – A-8	2.9	1.1	15	CLOSE/OPEN	3/4	1
CV-4755-AH0009-2	HIGH BAY AREA – 117 – B-8	2.9	1.1	15	CLOSE/OPEN	3/4	1
CV-4755-AH0010-2	HIGH BAY AREA – 117 – C-8	2.9	1.1	15	CLOSE/OPEN	3/4	1
CV-4755-AH0011-2	HIGH BAY AREA – 117 – D-8	2.9	1.1	15	CLOSE/OPEN	3/4	1
CV-4755-AH0012-2	HIGH BAY AREA – 117 – E-8	2.9	1.1	15	CLOSE/OPEN	3/4	1
CV-4755-AH0013-2	HIGH BAY AREA – 117 – F-8	2.9	1.1	15	CLOSE/OPEN	3/4	1
CV-4755-AH0014-2	ROOMS 102A & 102B	3.6	1.4	15	CLOSE/OPEN	3/4	1
CV-4755-AH0015-2	HIGH BAY AREA – 100 – G-5	5.5	2.2	15	CLOSE/OPEN	1	1
CV-4755-AH0016-2	HIGH BAY AREA – 100 – B-5	5.5	2.2	15	CLOSE/OPEN	1	1
CV-4755-AH0017-2	HIGH BAY AREA – 100 – C-5	5.5	2.2	15	CLOSE/OPEN	1	1
CV-4755-AH0018-2	MECH ROOM – 109 (E-9)	6.0	2.3	15	CLOSE/OPEN	1	1
CV-4755-AH0019-2	VESTIBULE – H-1	0.8	0.3	15	CLOSE/OPEN	3/4	1
CV-4755-AH0021-2	HIGH BAY AREA – 100 – A-1	9.7	3.8	15	CLOSE/OPEN	1-1/4	1
CV-4755-AH0022-2	HIGH BAY AREA – 100 – B-1	9.7	3.8	15	CLOSE/OPEN	1-1/4	1
CV-4755-AH0023-2	HIGH BAY AREA – 100 – E-1	5.5	2.2	15	CLOSE/OPEN	1	1
CV-4755-AH0024-2	HIGH BAY AREA – 100 – D-1	5.5	2.2	15	CLOSE/OPEN	1	1
CV-4755-AH0025-2	BASEMENT	0.6	0.3	10	CLOSE/OPEN	3/4	1
CV-4755-AH0030-2	VESTIBULE – A-3.5	0.6	0.2	15	CLOSE/OPEN	3/4	1
CV-4755-AH0031-2	VESTIBULE – ROOM – 122B – B-1	0.6	0.2	15	CLOSE/OPEN	3/4	1
CV-4755-AH0040-2	4TH FL EQUIP. ROOM – 400C (E-3)	13.5	5.3	15	CLOSE/OPEN	1-1/4	1
CV-4755-AH0044-2	3RD FL EQUIP. ROOM – 400B (E-4)	7.6	3.0	15	CLOSE/OPEN	1-1/4	1
CV-4755-AH0045-2	2ND FL EQUIP. ROOM – 400B (E-4)	9.8	3.9	15	CLOSE/OPEN	1-1/4	1
CV-4755-VAV0001	FIRST FLOOR RESTROOMS	0.7	0.3	10	CLOSE/OPEN	3/4	1
CV-4755-VAV0002	110A & 110B	0.5	0.2	10	CLOSE/OPEN	3/4	1
CV-4755-VAV0003	110	0.5	0.2	10	CLOSE/OPEN	3/4	1
CV-4755-VAV0004	110C	0.5	0.2	10	CLOSE/OPEN	3/4	1
CV-4755-VAV0006	112A	0.5	0.2	10	CLOSE/OPEN	3/4	1
CV-4755-VAV0007	114 & 114A	0.5	0.2	10	CLOSE/OPEN	3/4	1
CV-4755-VAV0008	116	0.5	0.2	10	CLOSE/OPEN	3/4	1
CV-4755-VAV0009	115	0.5	0.2	10	CLOSE/OPEN	3/4	1
CV-4755-VAV0010	111 & 113	0.5	0.2	10	CLOSE/OPEN	3/4	1
CV-4755-VAV0011	105	0.6	0.3	10	CLOSE/OPEN	3/4	1
CV-4755-VAV0012	CORRIDOR & 103 & 103A	0.5	0.2	10	CLOSE/OPEN	3/4	1
CV-4755-VAV0013	200 & 200A	0.5	0.2	10	CLOSE/OPEN	3/4	1
CV-4755-VAV0014	201, 202, 203, 204, 205, 206 & CORR.	0.5	0.2	10	CLOSE/OPEN	3/4	1
CV-4755-VAV0015	207, 208, 209 & 210	0.5	0.2	10	CLOSE/OPEN	3/4	1
CV-4755-VAV0016	211, 212, 213 & 214	0.5	0.2	10	CLOSE/OPEN	3/4	1
CV-4755-VAV0017	218	0.5	0.2	10	CLOSE/OPEN	3/4	1
CV-4755-VAV0018	220 & 222A	0.5	0.2	10	CLOSE/OPEN	3/4	1
CV-4755-VAV0019	200B	0.5	0.2	10	CLOSE/OPEN	3/4	1
CV-4755-VAV0020	216 & CORRIDOR	0.5	0.2	10	CLOSE/OPEN	3/4	1
CV-4755-VAV0021	215	0.5	0.2	10	CLOSE/OPEN	3/4	1
CV-4755-VAV0022	217 & 223	0.5	0.2	10	CLOSE/OPEN	3/4	1
CV-4755-VAV0023	222 & 222B	0.5	0.2	10	CLOSE/OPEN	3/4	1
CV-4755-VAV0024	224	0.5	0.2	10	CLOSE/OPEN	3/4	1
CV-4755-VAV0025	225, 227 & 231	0.5	0.2	10	CLOSE/OPEN	3/4	1
CV-4755-VAV0026	236, 238 & CORRIDOR	0.5	0.2	10	CLOSE/OPEN	3/4	1
CV-4755-VAV0027	226 & 228	0.5	0.2	10	CLOSE/OPEN	3/4	1
CV-4755-VAV0028	229	0.5	0.2	10	CLOSE/OPEN	3/4	1
CV-4755-VAV0029	234	0.5	0.2	10	CLOSE/OPEN	3/4	1
CV-4755-VAV0030	232, 232A, 232B & CORRIDOR	0.6	0.3	10	CLOSE/OPEN	3/4	1
CV-4755-VAV0031	327 & 329A	0.5	0.2	10	CLOSE/OPEN	3/4	1
CV-4755-VAV0032	323 & 325	0.5	0.2	10	CLOSE/OPEN	3/4	1
CV-4755-VAV0033	321 & 321A	0.5	0.2	10	CLOSE/OPEN	3/4	1
CV-4755-VAV0034	301B & 329	0.5	0.2	10	CLOSE/OPEN	3/4	1
CV-4755-VAV0035	301C, 331 & 333	0.5	0.2	10	CLOSE/OPEN	3/4	1
CV-4755-VAV0036	301A	0.5	0.2	10	CLOSE/OPEN	3/4	1
CV-4755-VAV0037	301	0.5	0.2	10	CLOSE/OPEN	3/4	1
CV-4755-VAV0038	303 & 305	0.5	0.2	10	CLOSE/OPEN	3/4	1
CV-4755-VAV0039	307, 309, 311, 313B & CORRIDOR	0.5	0.2	10	CLOSE/OPEN	3/4	1
CV-4755-VAV0040	302, 304, 306, 320, 322 & 324	0.5	0.2	10	CLOSE/OPEN	3/4	1
CV-4755-VAV0042	317, 319 & 321B	0.5	0.2	10	CLOSE/OPEN	3/4	1
CV-4755-VAV0043	308, 310, 312, 314, 316 & 318	0.5	0.2	10	CLOSE/OPEN	3/4	1
CV-4755-VAV0046	313 & 313A	0.5	0.2	10	CLOSE/OPEN	3/4	1
CV-4755-VAV0049	401 & 403A	0.5	0.2	10	CLOSE/OPEN	3/4	1
CV-4755-VAV0050	400A, 402, 404 & CORRIDOR	0.6	0.3	10	CLOSE/OPEN	3/4	1
CV-4755-VAV0051	403B & 403C	0.5	0.2	10	CLOSE/OPEN	3/4	1
CV-4755-VAV0052	403-1, 403-2 & 403-3	0.5	0.2	10	CLOSE/OPEN	3/4	1
CV-4755-VAV0053	407C-1, 407C-2 & 407C-3	0.5	0.2	10	CLOSE/OPEN	3/4	1
CV-4755-VAV0054	407C-4, 407C-5, 407C-6 & 407C-7	0.5	0.3	10	CLOSE/OPEN	3/4	1
CV-4755-VAV0055	403D, 403E & 403F	0.5	0.2	10	CLOSE/OPEN	3/4	1
CV-4755-VAV0056	403-4, 403-5, 403-6 & 403-7	0.5	0.2	10	CLOSE/OPEN	3/4	1
CV-4755-VAV0057	407D	0.5	0.2	10	CLOSE/OPEN	3/4	1
CV-4755-VAV0058	407, 407A & 407B	0.6	0.3	10	CLOSE/OPEN	3/4	1
CV-4755-VAV0059	405	0.5	0.2	10	CLOSE/OPEN	3/4	1
CV-4755-VAV0060	315	0.6	0.3	10	CLOSE/OPEN	3/4	1
CV-4755-VAV0061	315D & 315E	0.5	0.2	10	CLOSE/OPEN	3/4	1
CV-4755-VAV0062	315F	0.5	0.2	10	CLOSE/OPEN	3/4	1
CV-4755-VAV0064	315A & 315B	0.5	0.2	10	CLOSE/OPEN	3/4	1

*** Cv = GPM * SQRT(1/△P), WHERE P = CHANGE IN PRESSURE (PSI). Cv IS IN CUSTOMARY UNITS.

NOTES:
1. 2-WAY MODULATING CONTROL VALVE, WITH ELECTRIC ACTUATION.
2. 3-WAY CONTROL VALVE, WITH ELECTRIC ACTUATION.

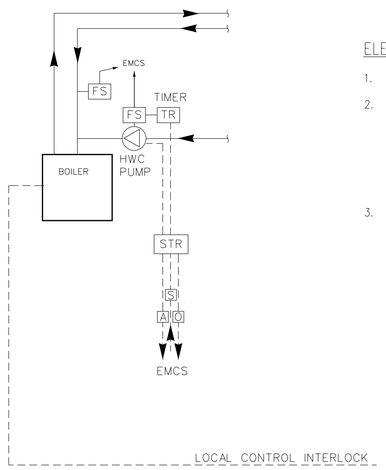

ELECTRIC WATER HEATER – 4755-HWHD0007

1. THE HEATER SHALL BE INTERLOCKED TO SHOW STATUS.
2. A HOT WATER RE-CIRCULATING PUMP WILL BE OPERATED ON A TIMER BASIS, THE UNIT WILL SHUT OFF DURING UN-OCCUPIED PERIODS (USER DETERMINED AND ADJUSTABLE 0600 – 1700 HOURS TYPICAL).
3. REFER TO PLUMBING DRAWINGS AND SPECIFICATIONS FOR LOCATION AND SPECIFICATION OF HWC CIRC PUMP AND ELECTRIC HOT WATER HEATER (4755-HWHD0007).

ELECTRIC WATER HEATER – CONTROL DIAGRAM

NO SCALE

2
P202 M706

ALABAMA LICENSED NO. 25590 PROFESSIONAL ENGINEER DESIDERIO HERNANDEZ

WARNING
DO NOT SCALE THIS DRAWING
THIS DRAWING WAS DESIGNED TO BE PRINTED AT A NASA SHEET SIZE: MSFC STD. SIZE 40" X 28"

REV.	BY	DATE	REVISION	C.I. NO.	APPROVED

Marshall Space Flight Center
Huntsville, Alabama 35812

REVITALIZE BUILDING
MECHANICAL SYSTEMS (4755)
MECHANICAL CONTROLS SEQUENCES

AE FIRM: GOODWYN | MILLS | CAWOOD — MERRICK & COMPANY — JOINT VENTURE

NASA AE CONTRACT NO. NASA- NNM12AA49C NNM12AA68T

SUBMITTED: JENNIFER LANDRY
APPROVAL RECOMMENDED: ANDY ROLAND, AS22 PROJECT A/E
APPROVED: JIMMY GUARIN

AE: DATE: 02/28/2014
APPROVAL RECOMMENDED: ANDY ROLAND, AS22 SUPPORT A/E
AS22 GROUP LEAD DATE:

DESIGNED J.MATTHEWS
DRAWN J.MATTHEWS
CHECKED D.HERNANDEZ
APPROVAL RECOMMENDED: NELSON OLINGER, AS22 TEAM LEAD

SCALE: NOT TO SCALE
SPEC. NO. FAC M5057

DRAWING NO. FAC-DA-4755-M706
SHEET __ OF __

FINAL SUBMITTAL
ISSUED FOR CONSTRUCTION

SIGNATURES ON INDEX SHEET INDICATE ACCEPTANCE OF THIS SHEET

REF. NO. 37 OF 37 M706

MSFC-FORM 232 REV. 8-21-89-RCL

MSFC Master Bid Disk 03-26-2014

PLUMBING SYMBOLS, ABBREVIATIONS, AND LEGEND

- DOMESTIC COLD WATER PIPING – CW
- DOMESTIC HOT WATER PIPING – HW
- DOMESTIC HOT WATER RECIRCULATING PIPING – HWC
- OD — OVERFLOW STORMWATER PIPING
- ST — STORMWATER DRAIN PIPING
- SW — SANITARY WASTE (ABOVE SLAB/CEILING)
- SS — SANITARY WASTE (BELOW SLAB)
- V — SANITARY VENT PIPING
- PIPE RISE (ELBOW)
- PIPE DROP (ELBOW)
- PIPE BRANCH CONNECTION FROM TOP
- PIPE BRANCH CONNECTION FROM BOTTOM
- PIPE CAP
- DIRECTION OF FLOW IN PIPE
- PIPE UNION
- BALANCING VALVE
- GATE VALVE
- OS&Y VALVE
- BALL VALVE
- BUTTERFLY VALVE
- STRAINER – WYE TYPE
- GLOBE VALVE
- HOSE END VALVE (GATE AND BALL)
- CHECK VALVE
- PRESSURE/TEMPERATURE RELIEF VALVE
- GATE ANGLE VALVE
- GAS COCK
- THERMOMETER
- PRESSURE GAUGE
- PRESSURE REDUCING VALVE
- FD–# — FLOOR DRAINS WITH TRAP
- FD–# — FLOOR DRAINS WITH TRAP PRIMER
- HWDW–# — INSTANTANEOUS ELECTRIC WATER HEATER
- PIPE ANCHOR
- PIPE GUIDE
- WHA — WATER HAMMER ARRESTOR
- VTR — VENT THROUGH ROOF
- HB — HOSE BIBB
- WH–# — WALL HYDRANT
- MV — THERMOSTATIC MIXING VALVE
- HWC BALANCING VALVE
- SLEEVE
- PIPE REDUCER – CONCENTRIC
- CONNECT TO EXISTING

PIPING ABBREVIATIONS

B/F	BELOW FLOOR
A/F	ABOVE FLOOR
PD	PRESSURE DISCHARGE
BP	BOOSTER PUMP
A/C	ABOVE CEILIING
GALV.	GALVANIZED
FCO	FLOOR CLEANOUT
RPBFP	REDUCED PRESSURE BACKFLOW PREVENTER
GCO	GROUND CLEANOUT
WC	WATER CLOSET
WHA	WATER HAMMER ARRESTOR
SH	SHOWER
L	LAVATORY
CO	CLEAN OUT
SK	SINK
MS	MOP SINK
HD	HUB DRAIN, WITH 1/2" CONNECTION.

PLUMBING GENERAL NOTES

1. COORDINATE LAYOUT WITH ARCHITECTURAL PLANS.
2. DIMENSIONS ARE IN INCHES UNLESS NOTED OTHERWISE.
3. VERIFY ALL DIMENSIONS OF THE WORK BEFORE COMMENCING FABRICATION OR INSTALLATION.
4. COORDINATION OF EQUIPMENT ELECTRICAL CHARACTERISTICS: COORDINATE VOLTAGE AND PHASE OF EACH PIECE OF EQUIPMENT WITH THE ELECTRICAL CONTRACTOR PRIOR TO ORDERING.
5. PLANS ARE DIAGRAMATIC; REFER TO ARCHITECTURAL DRAWINGS FOR ACTUAL DIMENSIONS AND COORDINATE THE INSTALLATION OF ANY PLUMBING EQUIPMENT, PIPING AND ACCESSORIES WITH THE SPACES AVAILABLE.
6. CONTRACTOR TO OBTAIN CUT–SHEETS ON ALL FIXTURES AND EQUIPMENT AND PROVIDE PROPER UTILITIES AND FINAL CONNECTIONS PER MANUFACTURER'S RECOMMENDATIONS. CONNECT ALL EQUIPMENT DRAINS FULL SIZE TO HUB AND/OR FLOOR DRAIN WITH MINIMUM 2 INCH GAP FOR INDIRECT CONNECTION. PROVIDE SPLASH BLOCKS AT EXTERIOR EQUIPMENT DRAINAGE.
7. PROVIDE 12" X 12" ACCESS PANELS FOR WATER HAMMER ARRESTERS, TRAP PRIMERS, AND ALL VALVES LOCATED ABOVE NON ACCESSIBLE CEILINGS AND INSIDE PIPE CHASES. EXACT LOCATION MUST BE COORDINATED WITH ARCHITECTURAL DRAWINGS AND APPROVED BY OWNER PRIOR TO INSTALLATION.
8. ALL PIPING SHALL IN OFFICE AREAS SHALL BE CONCEALED INSIDE WALLS AND PIPE CHASES OR ABOVE CEILINGS OR BELOW RAISED FLOORS IN ALL OFFICE AREAS. LOCATE ALL UTILITY SHUT OFF VALVES WITHIN 1'–0" FROM ACCESS POINT. HOLD ALL OTHER PIPING ABOVE CEILING AS HIGH AS POSSIBLE.
9. HOSE BIBBS SHALL BE MOUNTED MINIMUM 1'–6" ABOVE FLOOR.
10. REFER TO ARCHITECTURAL PLANS AND ELEVATIONS FOR LOCATION OF ALL PLUMBING FIXTURES. EXACT LOCATION OF ALL PLUMBING FIXTURES MUST BE VERIFIED IN FIELD PRIOR TO INSTALLATION. FINAL LOCATION SHALL BE AS DIRECTED BY OWNER.
11. MAKE FINAL CONNECTION TO ALL EQUIPMENT INDICATED ON DRAWINGS. FINAL CONNECTION SHALL INCLUDE ANY ADAPTERS, NIPPLES, SHUTOFF VALVES, PRESSURE REGULATING VALVES, DIRT LEGS, SHOCK ABSORBERS, BACKFLOW PREVENTION DEVICES, ETC., AS REQUIRED TO PROVIDE A FULLY OPERATIONAL SYSTEM. VERIFY IF PRESSURE REGULATORS ARE INTEGRAL TO EQUIPMENT, PROVIDE IF NOT INTEGRAL TO EQUIPMENT.
12. DO NOT RUN PIPING THROUGH THE COMMUNICATIONS ROOM OR OVER ELECTRICAL GEAR.
13. ALL STRUCTURAL PENETRATIONS (SLEEVES, BLOCKOUTS, ETC.) ARE TO BE LOCATED AND COORDINATED IN THE FIELD IN RELATION TO THE REQUIREMENTS OF FINAL EQUIPMENT AND FIXTURES SELECTED.
14. PROVIDE EXPANSION LOOPS WHERE PIPING PASSES ACROSS BUILDING EXPANSION JOINTS.
15. CONTRACTOR TO REPLACE ALL OF THE FAUCETS ON ALL OF THE LAVATORIES AND PROVIDE A COVER PLATE TO CONCEAL ANY EXTRANEOUS OPENINGS.

PLUMBING FIXTURE SCHEDULE

MARK	FIXTURE DESCRIPTION	MOUNTING HEIGHT	COLD WATER	HOT WATER	TRAP	DRAIN	VENT	FLUSH CYCLE (GPF)	REMARKS
WC–1	WATER CLOSET, WALL MOUNT FLUSH VALVE	14"	1"	–	–	4"	2"	1.28	1
WC–1A	WATER CLOSET, WALL MOUNT FLUSH VALVE	17"	1"	–	–	4"	2"	1.28	1
UR–1	URINAL, WALL HUNG	24"	3/4"	–	–	2"	1–1/2"	0.13	2
UR–1A	URINAL, WALL HUNG	17"	3/4"	–	–	2"	1–1/2"	0.13	2
LAV	LAVATORY – WALL HUNG	34"	1/2"	1/2"	–	1–1/4"	1–1/2"	0.5 (GPM)	3

GENERAL NOTES:
1. SIZES GIVEN ABOVE ARE FOR ONE FIXTURE ONLY. ANY EXCEPTIONS ARE SHOWN ON PLANS.
2. MOUNTING HEIGHTS GIVEN ARE TO FLOOD LEVEL RIM OF FIXTURE UNLESS NOTED OTHERWISE.

REMARKS:
1. WATER CLOEST SHALL BE SELF–POWERED AND AUTOMATIC, BASIS OF DESIGN: TOTO – TE1TLN.
2. URINAL SHALL BE SELF–POWERED AND AUTOMATIC, BASIS OF DESIGN: TOTO – TEU1LN.
3. LAVATORY FAUCETS SHALL BE SELF–POWERED AND AUTOMATIC, BASIS OF DESIGN: TOTO – TEL5GS10.

DOMESTIC WATER HEATER SCHEDULE

MARK	TYPE	WATTS	RECOVERY	FLOW (GPM)	TEMPERATURE RISE	STORAGE (GAL)	VOLTAGE / PHASE	BREAKER (AMPS)	DESIGN BASIS	REMARKS
4755–HWDW0006	ELECTRIC INSTANT	4.2	--	0.5	57 DEG. F	--	208/1	20	CHRONOMITE – SR–20L	1
4755–HWDW0007	ELECTRIC STORAGE	12,000	81.0	--	60 DEG. F	50	460/3	20	A.O. SMITH – DEN–52	2

REMARKS:
1. WATER HEATER WILL BE INSTALLED UNDER COUNTER AT BREAK ROOM 112.
2. WATER HEATER WILL BE PROVIDED WITH HOT WATER CIRCULATION PUMP – 6 KW HIGH AND LOW ELELMENTS.

ADDITIVE ALTERNATES

ADD ALTERNATIVE #1 – REPLACE EXISTING CHILLED WATER AND HEATING HOT WATER PIPING WITH ALL NEW PIPING. EXCEPT NEWLY INSTALLED HEATING HOT WATER RUNOUTS TO HIGH BAY AIR HANDLERS. IF ADD ALTERNATIVE #1 IS NOT SELECTED, ONLY PIPING BRANCHES TO DEMOLISHED EQUIPMENT SHALL BE DEMOLISHED.

ADD ALTERNATIVE #2 – REPLACE ALL WATER CLOSETS, URINALS, LAVATORIES WITH NEW FIXTURES. REMOVE ALL DOMESTIC HOT WATER HEATERS AND REPLACE WITH A SINGLE UNIT LOCATED ON THE 4TH FLOOR. REMOVE ALL HOT WATER PIPING AND REPLACE WITH NEW PIPING. ADD A HOT WATER RECIRCULATION PUMP AND ASSOCIATED HOT WATER RECIRCULATION PIPING. PROVIDE ONE CENTRALIZED WATER HEATER 4755–HWDW0007, AND A DEDICATED INSTANTANEOUS WATER HEATER FOR BREAKROOM SINK, 4755–HWDW0006.

ADD ALTERNATIVE #3– REPLACE EXISTING SANITARY AND POTABLE WATER SYSTEMS OCCURRING ABOVE THE FIRST FINISHED FLOOR SLAB AT LOCATIONS SHOWN ON DRAWINGS. IF ADD ALTERNATE #3 IS SELECTED, DEMOLISH UNUSED SANITARY AND POTABLE WATER SUPPLY LINES. SEE PLUMBING DRAWINGS FOR THIS ALTERNATE.

ADD ALTERNATE #4– REMOVE LIGHT FIXTURES SHOWN ON ARCHITECTURAL DRAWINGS A501 THROUGH A504 IN AREAS TO RECEIVE NEW CEILING GRID AND ACOUSTICAL TILE. FURNISH AND INSTALL NEW LIGHT FIXTURES SHOWN AND SCHEDULED ON DRAWINGS E406 & E407. USE EXISTING LIGHTING CIRCUITS AND LIGHTING CONTROLS FOR THIS ALTERNATE. COORDINATE INSTALLATION OF LIGHTING FIXTURES WITH THE MECHANICAL CONTRACTOR.

DEMOLITION DEFINITIONS

REMOVE AND DEMOLISH	CONTRACTOR SHALL REMOVE ITEM INDICATED AND DISPOSE Of ITEM. CONTRACTOR SHALL BE RESPONSIBLE FOR DISCONNECTION Of ALL SERVICES, APPURTENANCES. AND ACCESSORIES Of ITEM INDICATED. COORDINATE DISCONNECTION OF ANY ELECTRICAL SERVICES WITH ELECTRICAL CONTRACTOR. DISPOSAL Of EQUIPMENT SHALL MEET ALL LOCAL. STATE AND FEDERAL REGULATIONS.
REMOVE AND SALVAGE	CONTRACTOR SHALL REMOVE ITEM INDICATED AND PROVIDE TO OWNER FOR USE BY OWNER. CONTRACTOR SHALL BE RESPONSIBLE FOR DISCONNECTION OF ALL SERVICES, APPURTENANCES, AND ACCESSORIES Of ITEM INDICATED. COORDINATE DISCONNECTION OF ANY ELECTRICAL SERVICES WITH ELECTRICAL CONTRACTOR.
REMOVE AND RE–USE	CONTRACTOR SHALL REMOVE ITEM FOR RE–USE ON THIS PROJECT. CONTRACTOR SHALL BE RESPONSIBLE FOR DISCONNECTION OF ALL SERVICES, APPURTENANCES. AND ACCESSORIES Of ITEM INDICATED. COORDINATE DISCONNECTION OF ANY ELECTRICAL SERVICES WITH ELECTRICAL CONTRACTOR. IN INTERIM TIME BETWEEN REMOVAL AND RE–INSTALLATION, CONTRACTOR SHALL STORE ITEM AT SITE AND PROTECT FROM DAMAGE. CONTRACTOR SHALL BE RESPONSIBLE FOR MAINTAINING EXISTING CONDITION Of ITEM AND FOR COSTS INCURRED FOR REPLACEMENT/REPAIR Of ITEM TO PRESENT CONDITION.

ALABAMA LICENSED NO. 25590 PROFESSIONAL ENGINEER DESIDERIO HERNANDEZ

WARNING
DO NOT SCALE THIS DRAWING
THIS DRAWING WAS DESIGNED TO BE PRINTED AT A NASA SHEET SIZE: MSFC STD. SIZE 40" X 28"

REV.	BY	DATE	REVISION	C.I. NO.	APPROVED

Marshall Space Flight Center
Huntsville, Alabama 35812

REVITALIZE BUILDING
MECHANICAL SYSTEMS (4755)
PLUMBING GEN NOTES, ABBREVIATIONS, LEGEND & SCHEDULES

AE FIRM: GOODWYN | MILLS | CAWOOD — MERRICK & COMPANY — JOINT VENTURE

NASA AE CONTRACT NO. NASA- NNM12AA49C NNM12AA68T

SUBMITTED: JENNIFER LANDRY
APPROVAL RECOMMENDED: ANDY ROLAND, AS22 PROJECT A/E
APPROVED: JIMMY GUARIN, AS22 GROUP LEAD

AE: DATE: 02/28/2014
DESIGNED J.MATTHEWS
DRAWN J.MATTHEWS
CHECKED D.HERNANDEZ
SCALE: NOT TO SCALE
APPROVAL RECOMMENDED: ANDY ROLAND, AS22 SUPPORT A/E
APPROVAL RECOMMENDED: NELSON OLINGER, AS22 TEAM LEAD
SPEC. NO. FAC M5057
DATE:

DRAWING NO. FAC-DA-4755-P001
SHEET __ OF __

FINAL SUBMITTAL
ISSUED FOR CONSTRUCTION

SIGNATURES ON INDEX SHEET INDICATE ACCEPTANCE OF THIS SHEET

REF. NO. 01 OF 08 P001

MSFC-FORM 232 REV. 8-21-89-RCL

MSFC Master Bid Disk 03-26-2014

GENERAL NOTES:

1. REFER TO SHEET M-001 FOR GENERAL NOTES APPLYING TO ALL MECHANICAL SHEETS.

2. ADD ALTERNATIVE #2 - REPLACE ALL WATER CLOSETS, URINALS, SELECTED LAVATORIES SHOWN, WITH NEW FIXTURES AND REPLACE ALL LAVATORY FAUCETS. REMOVE ALL DOMESTIC HOT WATER HEATERS AND REPLACE WITH A SINGLE UNIT LOCATED ON THE 4TH FLOOR. REMOVE ALL HOT WATER PIPING AND REPLACE WITH NEW PIPING. ADD A HOT WATER RECIRCULATION PUMP AND ASSOCIATED HOT WATER RECIRCULATION PIPING TO CONNECTION TO NEW FIXTURES. REPLACE ALL OF THE FAUCETS ON ALL OF THE LAVATORIES AND PROVIDE A FLOOR PLATE TO CONCEAL ANY EXISTING PIPE BRACKETS.

KEYED NOTES:

1. REMOVE ALL EXISTING WATER CLOSETS AND ASSOCIATED FLOOR FIXTURE LOCATION TO RECEIVE A NEW WALL MOUNTED WATER CLOSET. EACH WATER CLOSET WILL HAVE A WALL SUPPORT CARRIER, AND A STUB OUT FOR CONNECTION TO NEW FIXTURE.

2. REMOVE ALL EXISTING URINALS, PREPARE AND FLOOR FIXTURE LOCATION TO RECEIVE A NEW WALL MOUNTED URINAL.

3. REMOVE EXISTING WATER HEATER SERVING THE BROOKINGS SINK IN ROOM 112A. REMOVE HOT WATER PIPING UP TO THE SUPPLY RISER AT THE EXISTING SINK. SEE DETAIL FOR THE REQUIREMENTS FOR NEW HOT WATER PIPING.

4. REMOVE ALL HOT WATER PIPING FROM EXISTING HOT WATER HEATER. REMOVE ALL HOT WATER PIPING UP TO HOT WATER PIPING SUPPLY DROPS TO EXISTNG FIXTURES.

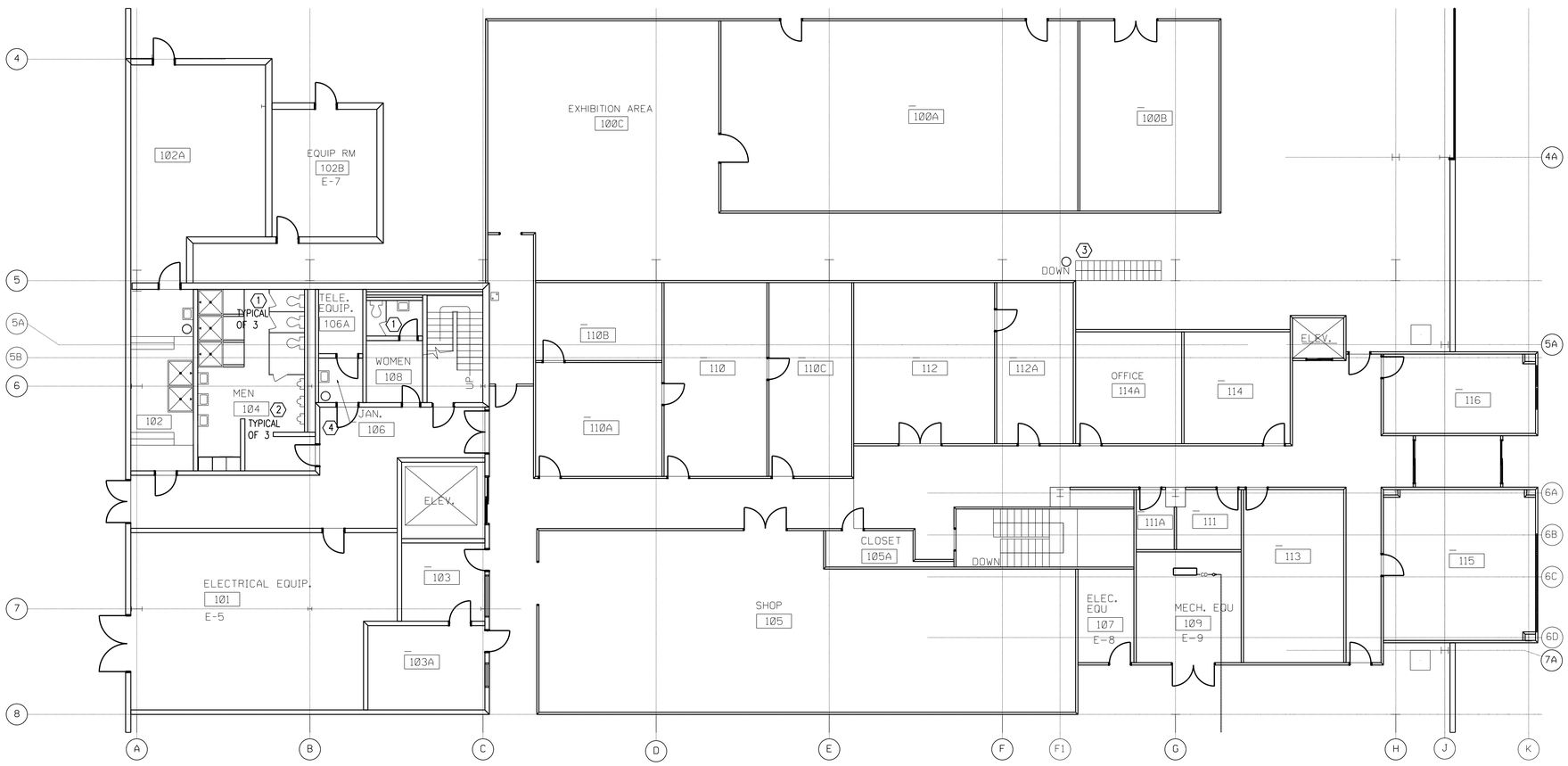

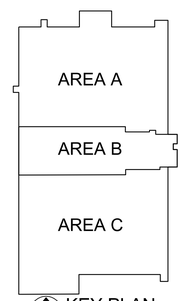

KEY PLAN
NOT TO SCALE

FIRST FLOOR DEMOLITION PLAN – AREA "B"
SCALE: 1/8" = 1'-0"
1 P101

8 6 4 2 0 16 FEET
7 5 3 1 8
SCALE: 1/8" = 1'-0"

ALABAMA LICENSED NO. 25590 PROFESSIONAL ENGINEER DESIDERIO HERNANDEZ

WARNING
DO NOT SCALE THIS DRAWING
THIS DRAWING WAS DESIGNED TO BE PRINTED AT A NASA SHEET SIZE: MSFC STD. SIZE 40" X 28"

REV	BY	DATE	REVISION	C.I. NO.	APPROVED

Marshall Space Flight Center
Huntsville, Alabama 35812

REVITALIZE BUILDING
MECHANICAL SYSTEMS (4755)
FIRST FLOOR DEMOLITION PLAN - AREA"B"

AE FIRM: GOODWYN | MILLS | CAWOOD — MERRICK & COMPANY — JOINT VENTURE

NASA AE CONTRACT NO: NASA- NNM12AA49C NNM12AA68T

SUBMITTED: JENNIFER LANDRY
APPROVAL RECOMMENDED: ANDY ROLAND, AS22 PROJECT A/E
APPROVED: JIMMY GUARIN, AS22 GROUP LEAD, DATE:

AE: DATE: 11/04/13
DESIGNED J.MATTHEWS
DRAWN J.MATTHEWS
CHECKED D.HERNANDEZ
SCALE: 1/8"=1'-0"
APPROVAL RECOMMENDED: ANDY ROLAND, AS22 SUPPORT A/E
APPROVAL RECOMMENDED: NELSON OLINGER, AS22 TEAM LEAD
SPEC. NO. FAC M5057

DRAWING NO. FAC-DA-4755-P101
SHEET __ OF __

FINAL SUBMITTAL
ISSUED FOR CONSTRUCTION

SIGNATURES ON INDEX SHEET INDICATE ACCEPTANCE OF THIS SHEET

REF. NO. 02 OF 06 P101

MSFC-FORM 232 REV. 6-21-95/ROL

MSFC Master Bid Disk 03-26-2014

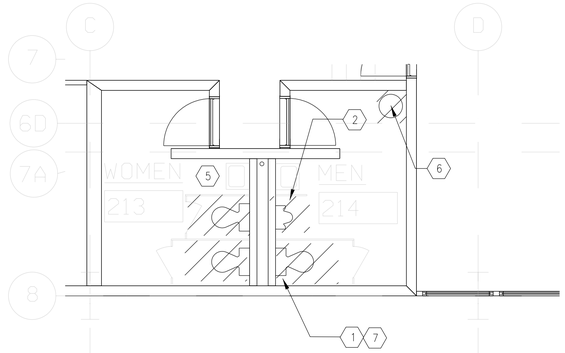

ALTERNATE #2 – REPLACE EXISTING HOT WATER COMPLETE TO HOT WATER SUPPLY DROPS AT EXISTING LOCATIONS. REPLACE EXISTING INSULATION, AND REMOVE EXISTING HOT WATER LINES. UP TO POINT OF DROPS.

ALTERNATE #3 – REPLACE EXISTING COLD WATER AND SANITARY & VENT PIPING AT CHASE LOCATIONS WITH REWORK OR AS DESIGNATED.

ADDITIONAL PLUMBING DEMOLITION PLAN – 2ND FLOOR

SCALE: 1/4" = 1'-0"

1 / P102

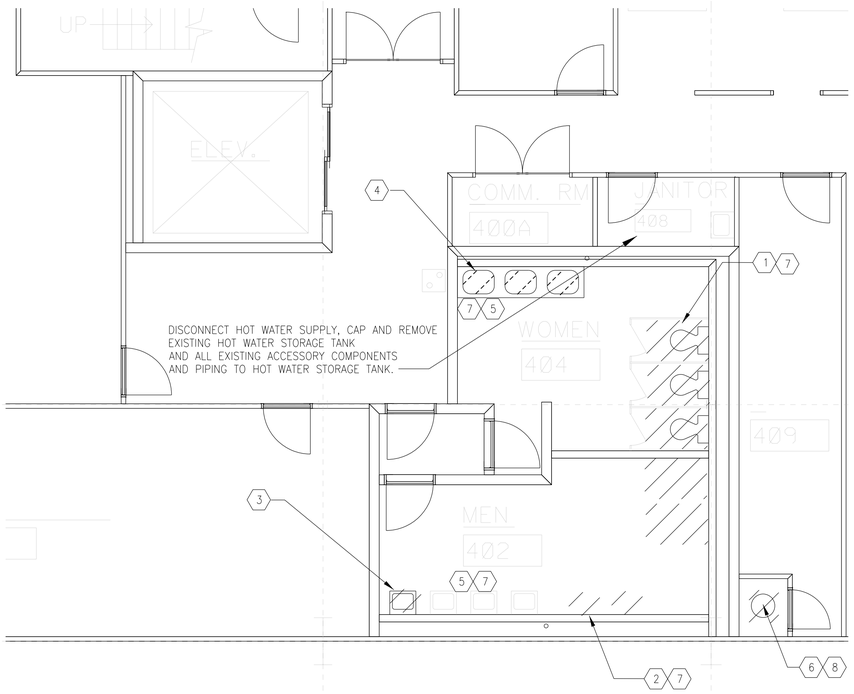

DISCONNECT HOT WATER SUPPLY, CAP AND REMOVE EXISTING HOT WATER STORAGE TANK AND ALL EXISTING ACCESSORY COMPONENTS AND PIPING TO HOT WATER STORAGE TANK.

ALTERNATE #2 – REPLACE EXISTING HOT WATER COMPLETE TO HOT WATER SUPPLY DROPS AT EXISTING LOCATIONS. REPLACE EXISTING INSULATION, AND REMOVE EXISTING HOT WATER LINES. UP TO POINT OF DROPS.

ALTERNATE #3 – REPLACE EXISTING COLD WATER AND SANITARY & VENT PIPING AT CHASE LOCATIONS WITH REWORK OR AS DESIGNATED.

ADDITIONAL PLUMBING DEMOLITION PLAN – 4TH FLOOR

SCALE: 1/4" = 1'-0"

3 / P102

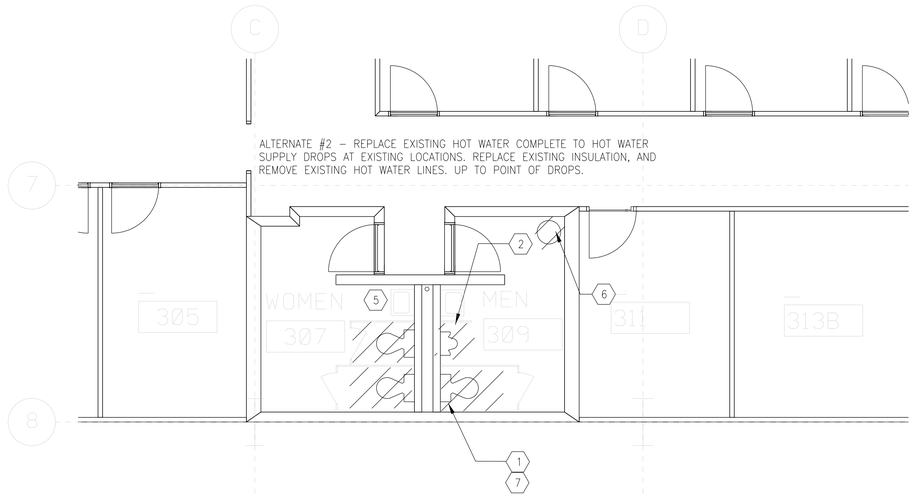

ALTERNATE #2 – REPLACE EXISTING HOT WATER COMPLETE TO HOT WATER SUPPLY DROPS AT EXISTING LOCATIONS. REPLACE EXISTING INSULATION, AND REMOVE EXISTING HOT WATER LINES. UP TO POINT OF DROPS.

ALTERNATE #3 – REPLACE EXISTING COLD WATER AND SANITARY & VENT PIPING AT CHASE LOCATIONS WITH REWORK OR AS DESIGNATED.

ADDITIONAL PLUMBING DEMOLITION PLAN – 3RD FLOOR

SCALE: 1/4" = 1'-0"

2 / P102

4 3 2 1 0 8 FEET

SCALE: 1/4" = 1'-0"

GENERAL NOTES:

1. REFER TO SHEET M-001 FOR GENERAL NOTES APPLYING TO ALL MECHANICAL SHEETS.
2. ADD ALTERNATIVE #2 – REPLACE ALL WATER CLOSETS, URINALS, SELECTED LAVATORIES SHOWN, WITH NEW FIXTURES AND REPLACE ALL LAVATORY FAUCETS. REMOVE ALL DOMESTIC HOT WATER HEATERS AND REPLACE WITH A SINGLE UNIT LOCATED ON THE 4TH FLOOR. REMOVE ALL HOT WATER PIPING AND REPLACE WITH NEW PIPING. ADD A HOT WATER RECIRCULATION PUMP AND ASSOCIATED HOT WATER RECIRCULATION PIPING.
3. CONTRACTOR TO REPLACE ALL OF THE FAUCETS ON ALL OF THE LAVATORIES AND PROVIDE A COVERPLATE TO CONCEAL ANY EXTRANEOUS OPENINGS.
4. ADD ALTERNATE #3 REPLACES SANITARY AND CW LOCATIONS WITH NEW WALL MOUNTED URINAL.
5. SEE ARCHITECTURAL DRAWINGS FOR WALL CONDITIONS.

KEYED NOTES:

1. REMOVE ALL EXISTING WATER CLOSET FIXTURE LOCATION TO RECEIVE A NEW WALL MOUNTED WATER CLOSET. EACH WATER CLOSET WILL BE A WALL SUPPORTED CARRIER, AND A STUB OUT FOR WALL MOUNTED NEW FIXTURE.
2. REMOVE ALL EXISTING URINALS. PREPARE EACH FIXTURE LOCATION TO RECEIVE A NEW WALL MOUNTED URINAL. REPLACE OR WHERE DESIGNATED BY ADDITION.
3. REMOVE WALL MOUNTED LAVATORY AT THIS LOCATION.
4. REMOVE COUNTER MOUNTED LAVATORY AT LOCATION SHOWN. PREPARE WALL TO RECEIVE WALL MOUNTED FIXTURES, COMPLETE WITH WALL SUPPORTED CARRIERS.
5. PROVIDE NEW LAVATORY FAUCETS AT ALL LOCATIONS. CONTRACTOR SHALL USE EXISTING SUPPLY LINES, AND PROVIDE COVER PLATES FOR ALL MODIFICATIONS TO PLACE OVER EXISTING FAUCET OPENINGS.
6. REMOVE ALL EXISTING HOT WATER HEATERS IF ADD ALTERNATE #2 IS SELECTED.
7. REMOVE ALL PIPING IN CHASE IF ADD ALTERNATE # 3 IS SELECTED. (ABOVE FLOOR).
8. IF ADD ALTERNATE #2 IS SELECTED, TAKE CARE TO SALVAGE THE NEWLY INSTALLED HOT WATER HEATER (4755-HWHD0001) TO SAVE IT, TO BE RETURN BACK INTO THE GOVERNMENT'S POSSESSION.

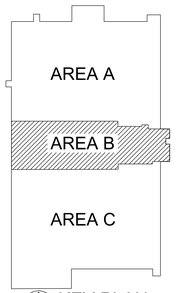

KEY PLAN
NOT TO SCALE

ALABAMA LICENSED NO. 25590 PROFESSIONAL ENGINEER DESIDERIO HERNANDEZ

WARNING
DO NOT SCALE THIS DRAWING
THIS DRAWING WAS DESIGNED TO BE PRINTED AT A NASA SHEET SIZE: MSFC STD. SIZE 40" X 28"

REV.	BY	DATE	REVISION	C.I. NO.	APPROVED

Marshall Space Flight Center
Huntsville, Alabama 35812

REVITALIZE BUILDING
MECHANICAL SYSTEMS (4755)

PLUMBING - ADDITIONAL FLOOR DEMOLITION PLANS

GOODWYN | MILLS | CAWOOD — MERRICK & COMPANY — JOINT VENTURE

PRIME CONTRACT NO. NASA NNM12AA49C
NASA AE CONTRACT NO. NNM12AA68T

PM: JENNIFER LANDRY		ADD'L PROJECT MGR: ANDY ROLAND	CHIEF ENGINEER: JIMMY GUARIN
AE:	DATE: 02/28/2014	ASSO PROJECT MGR: ANDY ROLAND	ASSO GROUP LEAD: DATE:
DESIGNED:	J.MATTHEWS	PROJECT ENGINEER: NELSON OLINGER	DRAWING NO. FAC-DA-4755-P102
DRAWN:	J.MATTHEWS		
CHECKED:	D.HERNANDEZ		
SCALE:	1/8"=1'-0"	SPEC. NO. (FAC): M5057	SHEET __ OF __

FINAL SUBMITTAL
ISSUED FOR CONSTRUCTION

SIGNATURES ON INDEX SHEET INDICATE ACCEPTANCE OF THIS SHEET

REF. NO. 03 OF 08

P102

MSFC-FORM 232 REV. 8-21-89-RCL

MSFC Master Bid Disk 03-26-2014

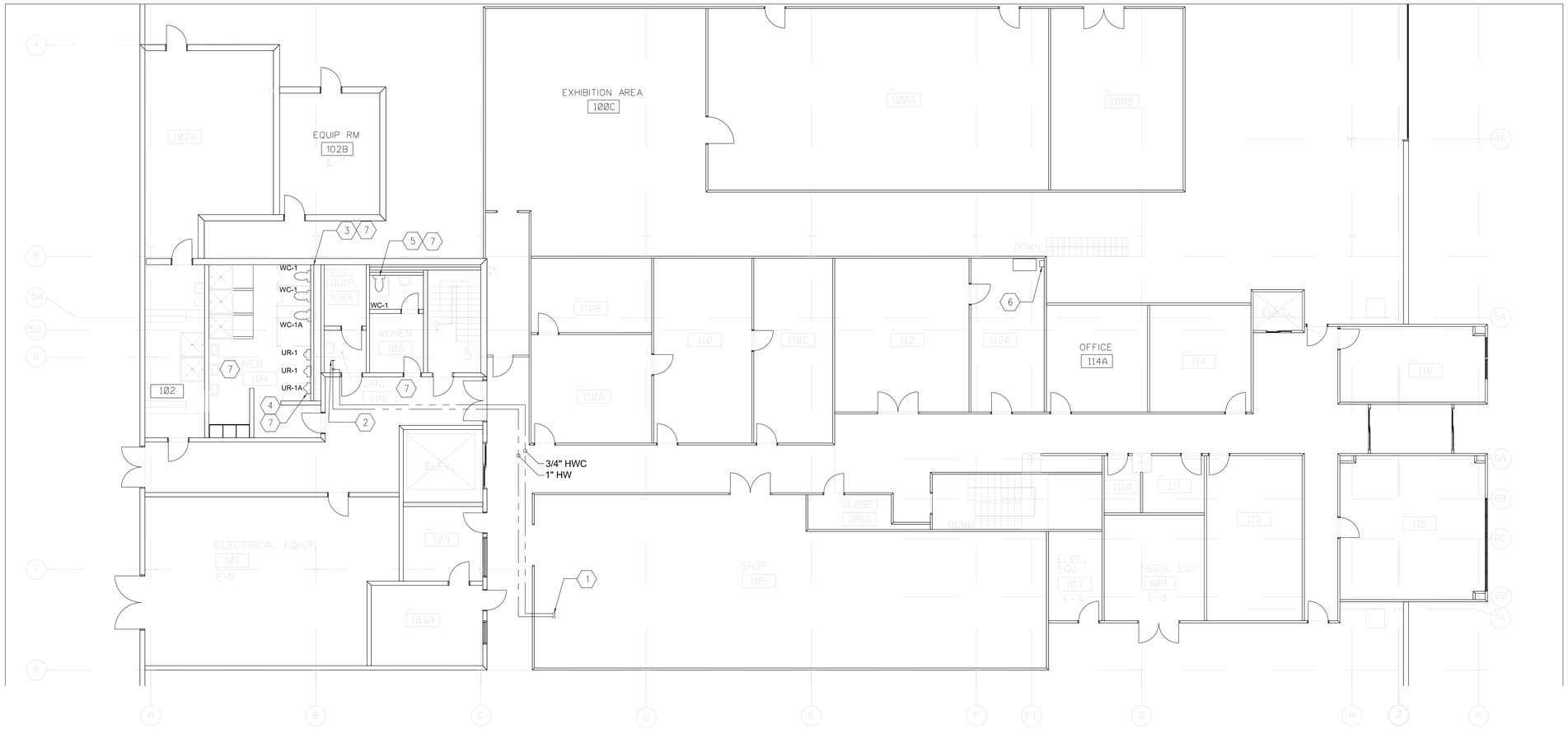

PLUMBING –FIRST FLOOR NEW WORK PLAN – AREA "B" (1 / P201)

SCALE: 1/8" = 1'-0"

GENERAL NOTES:

1. REFER TO SHEET M-001 FOR GENERAL NOTES APPLYING TO ALL MECHANICAL SHEETS.

2. ADD ALTERNATIVE #2 – REPLACE ALL WATER CLOSETS, URINALS, SELECTED LAVATORIES SHOWN, WITH NEW FIXTURES AND REPLACE ALL LAVATORY FAUCETS. REMOVE ALL DOMESTIC HOT WATER HEATERS AND REPLACE WITH A SINGLE UNIT LOCATED ON THE 4TH FLOOR. REMOVE ALL HOT WATER PIPING AND REPLACE WITH NEW PIPING. ADD A HOT WATER RECIRCULATION PUMP AND ASSOCIATED HOT WATER RECIRCULATION PIPING.

3. CONTRACTOR TO REPLACE ALL OF THE FAUCETS ON ALL OF THE LAVATORIES AND PROVIDE A COVERPLATE TO CONCEAL ANY EXTRANEOUS OPENINGS.

KEYED NOTES:

1. 1" HW & ¾" HWC UP TO 2ND FLOOR.
2. CAP AND REMOVE EXISTING HW FROM EXISTING DWS WATER HEATER. TIE-IN 1"HW TO EXISTING HW. SEE DEMOLITION FOR EXISTING FIXTURES.
3. ADD ALTERNATE #3 REPLACES SANITARY AND CW PROVIDE 4A NEW VITREOUS CHINA WALL HUNG LOW CONSUMPTION WATER CLOSETS. PROVIDE NEW WATER SUPPLY CONNECTIONS TO NEW FLUSH VALVES.
4. PROVIDE 3 NEW URINALS. COMPLETE WITH WALL MOUNTED SUPPORT CARRIERS. PROVIDE NEW WATER SUPPLY CONNECTIONS TO NEW FLUSH VALVES.
5. PROVIDE 1 NEW WATER CLOSET, COMPLETE WITH WALL MOUNTED SUPPORT CARRIER. PROVIDE NEW WATER SUPPLY CONNECTIONS TO NEW FLUSH VALVE.
6. INSTALL NEW INSTANTANEOUS WATER HEATER (4755-HWHD0006) BELOW COUNTER IN BREAKROOM-112A. RE-USE EXISTING WATER SUPPLIES FROM EXISTING SINK SUPPLY LINES AND EXTEND FOR USE WITH NEW WATER HEATER.
7. ALTERNATE#3 REPLACEMENT IS FOR ALL SANITARY AND VENT PIPING ASSOCIATED WITH THE FIXTURES AT AREAS SHOWN.,

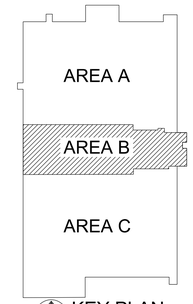

KEY PLAN
NOT TO SCALE

ALABAMA LICENSED NO. 25590 PROFESSIONAL ENGINEER DESIDERIO HERNANDEZ

WARNING
DO NOT SCALE THIS DRAWING
THIS DRAWING WAS DESIGNED TO BE PRINTED AT A NASA SHEET SIZE: MSFC STD. SIZE 40" X 28"

REV.	BY	DATE	REVISION	C.I. NO.	APPROVED

Marshall Space Flight Center
Huntsville, Alabama 35812

REVITALIZE BUILDING
MECHANICAL SYSTEMS (4755)
PLUMBING - FIRST FLOOR NEW WORK PLAN - AREA "B"

8 6 4 2 0 16 FEET
7 5 3 1 8
SCALE: 1/8" = 1'-0"

AE FIRM: GOODWYN | MILLS | CAWOOD — MERRICK & COMPANY — JOINT VENTURE

NASA AE CONTRACT NO. NASA- NNM12AA49C NNM12AA68T

SUBMITTED: JENNIFER LANDRY
APPROVAL RECOMMENDED: ANDY ROLAND, AS22 PROJECT A/E
APPROVED: JIMMY GUARIN

AE: DATE: 02/28/2014
DESIGNED J.MATTHEWS
DRAWN J.MATTHEWS
CHECKED D.HERNANDEZ
SCALE: 1/8"=1'-0"
APPROVAL RECOMMENDED: ANDY ROLAND, AS22 SUPPORT A/E
APPROVAL RECOMMENDED: NELSON OLINGER, AS22 TEAM LEAD
SPEC. NO. FAC M5057
AS22 GROUP LEAD DATE:

FINAL SUBMITTAL
ISSUED FOR CONSTRUCTION

SIGNATURES ON INDEX SHEET INDICATE ACCEPTANCE OF THIS SHEET

REF. NO. 04 OF 08 P201

DRAWING NO. FAC-DA-4755-P201
SHEET __ OF __

MSFC-FORM 232 REV. 8-21-89-RCL

MSFC Master Bid Disk 03-26-2014

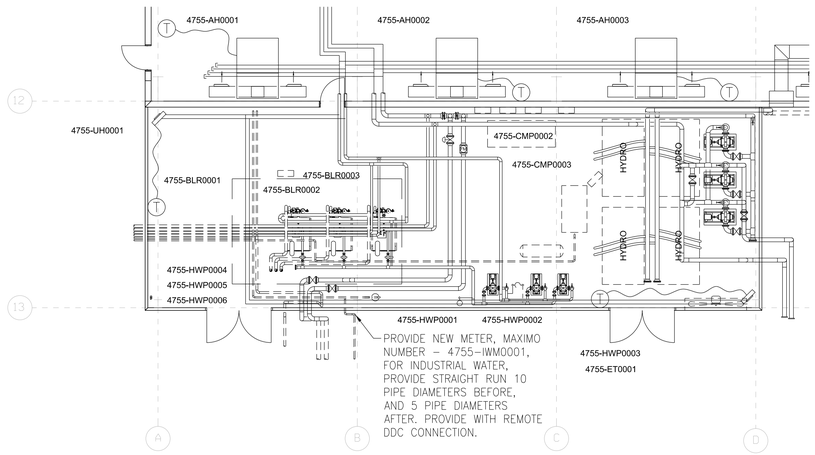

ADDITIONAL PLUMBING PLAN – 1ST FLOOR

SCALE: 1/8" = 1'-0"

1 P202

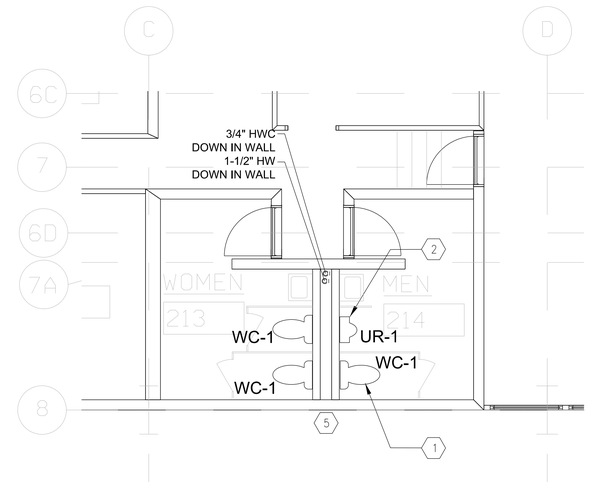

ADDITIONAL PLUMBING PLAN – 2ND FLOOR

SCALE: 1/4" = 1'-0"

2 P202

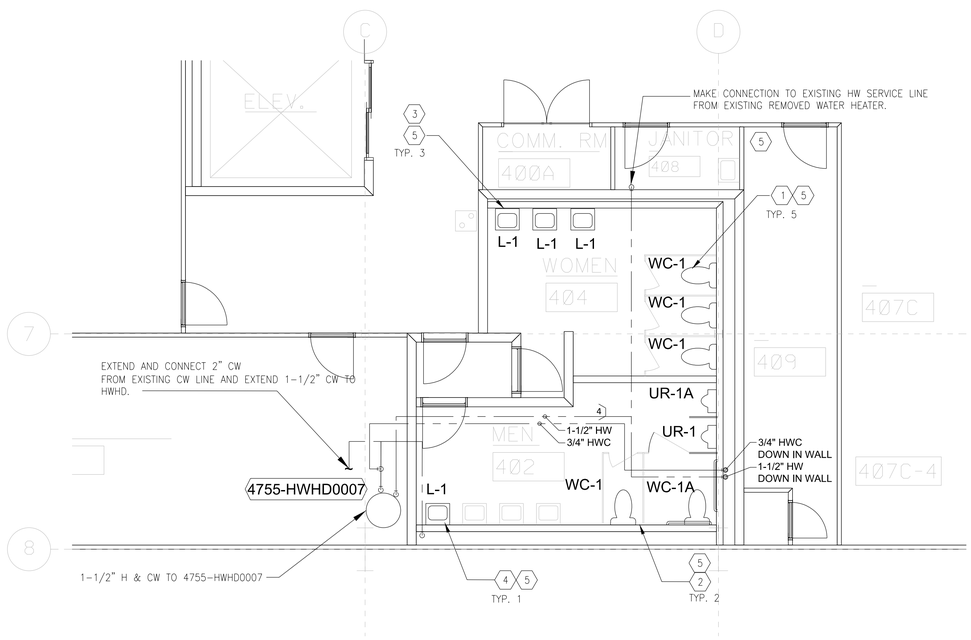

ADDITIONAL PLUMBING PLAN – 4TH FLOOR

SCALE: 1/4" = 1'-0"

4 P301 P202

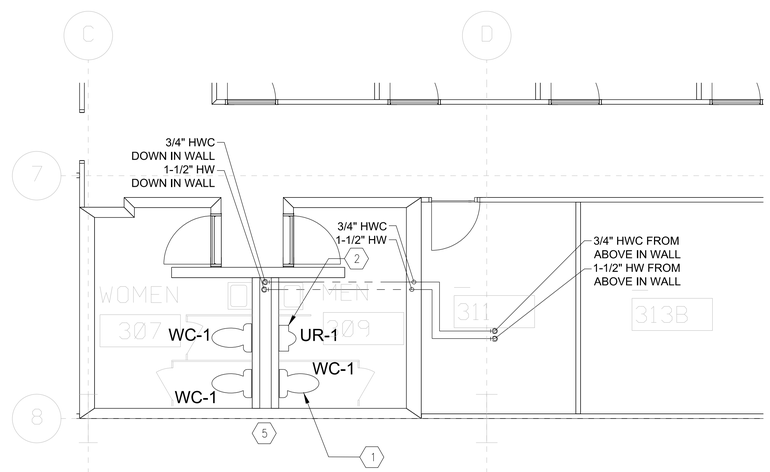

ADDITIONAL PLUMBING PLAN – 3RD FLOOR

SCALE: 1/4" = 1'-0"

3 P202

GENERAL NOTES:

1. REFER TO SHEET P-001 FOR GENERAL NOTES APPLYING TO ALL MECHANICAL SHEETS.
2. PROVIDE NEW WATER METERS FOR INDUSTRIAL WATER (1", FIELD VERIFY SIZE). METER SHALL HAVE CAPABILITY TO TIE INTO UCS.
3. ADD ALTERNATIVE #2 – REPLACE ALL WATER CLOSETS, URINALS, SELECTED LAVATORIES SHOWN, WITH NEW FIXTURES AND REPLACE ALL LAVATORY FAUCETS. REMOVE ALL DOMESTIC HOT WATER HEATERS AND REPLACE WITH A SINGLE UNIT LOCATED ON THE 4TH FLOOR. REMOVE ALL HOT WATER PIPING AND REPLACE WITH NEW PIPING. ADD A HOT WATER RECIRCULATION PUMP AND ASSOCIATED HOT WATER RECIRCULATION PIPING.
4. CONTRACTOR TO REPLACE ALL OF THE FAUCETS ON ALL OF THE LAVATORIES AND PROVIDE A COVER PLATE TO CONCEAL ANY EXTRANEOUS OPENINGS.
5. SEE ARCH. DWGS FOR WALL DEMOLITION.
6. ADD ALTERNATE #3 REPLACE ALL SANITARY AND VENT PIPING AT LOCATIONS WHERE FIXTURES ARE REPLACED OR WHERE DESIGNATED.

KEYED NOTES:

1. PROVIDE NEW WATER CLOSETS, COMPLETE WITH WALL MOUNTED SUPPORT CARRIERS. PROVIDE NEW WATER SUPPLY CONNECTIONS TO NEW FLUSH VALVES.
2. PROVIDE NEW URINALS. COMPLETE WITH WALL MOUNTED SUPPORT CARRIERS. PROVIDE NEW WATER SUPPLY CONNECTIONS TO NEW FLUSH VALVES.
3. PROVIDE 3 NEW WALL HUNG LAVATORIES AT LOCATION SHOWN, PROVIDE NEW CENTERSET FAUCET WITH SENSOR OPERATED SUPPLY. PROVIDE NEW SUPPLY RISERS AND VALVES, PROVIDE INSULATION AT EXPOSED LOCATIONS. ALL LAVATORIES WILL HAVE WALL MOUNTED ARM SUPPORTS.
4. PROVIDE 1 NEW WALL HUNG LAVATORIES AT LOCATION SHOWN, PROVIDE NEW CENTERSET FAUCET WITH SENSOR OPERATED SUPPLY. PROVIDE NEW SUPPLY RISERS AND VALVES, PROVIDE INSULATION AT EXPOSED LOCATIONS. ALL LAVATORIES WILL HAVE WALL MOUNTED ARM SUPPORTS.
5. ALTERNATE# 3 REPLACEMENT IS FOR ALL SANITARY AND VENT PIPING ASSOCIATED WITH THE FIXTURES AT AREAS SHOWN.

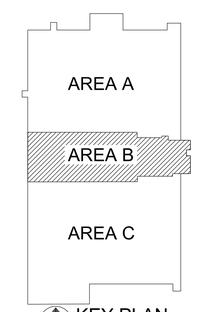

KEY PLAN
NOT TO SCALE

ALABAMA LICENSED NO. 25590 PROFESSIONAL ENGINEER DESIDERIO HERNANDEZ

WARNING
DO NOT SCALE THIS DRAWING
THIS DRAWING WAS DESIGNED TO BE PRINTED AT A NASA SHEET SIZE: MSFC STD. SIZE 40" X 28"

REV.	DATE	REVISION	C.J. NO.	APPROVED

Marshall Space Flight Center
Huntsville, Alabama 35812

REVITALIZE BUILDING
MECHANICAL SYSTEMS (4755)
ADDITIONAL FLOORS NEW WORK PLANS

4 3 2 1 0 8 FEET
SCALE: 1/4" = 1'-0"

8 6 4 2 0 16 FEET
7 5 3 1 8
SCALE: 1/8" = 1'-0"

FINAL SUBMITTAL
ISSUED FOR CONSTRUCTION

SIGNATURES ON INDEX SHEET INDICATE ACCEPTANCE OF THIS SHEET

REF. NO. 05 OF 08

P202

AE FIRM: GOODWYN | MILLS | CAWOOD — MERRICK & COMPANY — JOINT VENTURE

NASA AE CONTRACT NO. NASA- NNM12AA49C NNM12AA68T

SUBMITTED: JENNIFER LANDRY
RECOMMENDED: ANDY ROLAND, AS22 PROJECT A/E
APPROVED: JIMMY GUARIN, AS22 GROUP LEAD, DATE:

AE: DATE: 02/28/2014
RECOMMENDED: ANDY ROLAND, AS22 SUPERVISOR A/E
DESIGNED: J.MATTHEWS
DRAWN: J.MATTHEWS
CHECKED: D.HERNANDEZ
APPROVED: NELSON OLINGER, AS22 TEAM LEADER
SCALE: 1/8"=1'-0"
SPEC. NO. FAC M5057

DRAWING NO. FAC-DA-4755-P202
SHEET __ OF __

MSFC-FORM 232 REV. 8-21-99-RCL

MSFC Master Bid Disk 03-26-2014

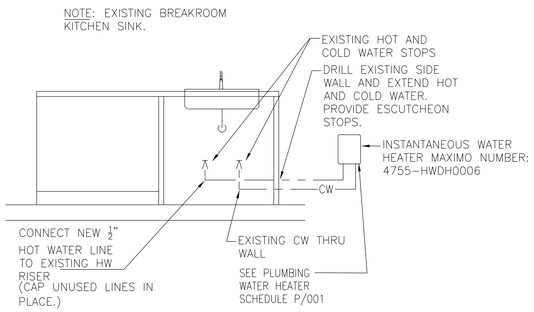

INSTANTANEOUS HEATER (1)

NO SCALE — P-201 | P-301

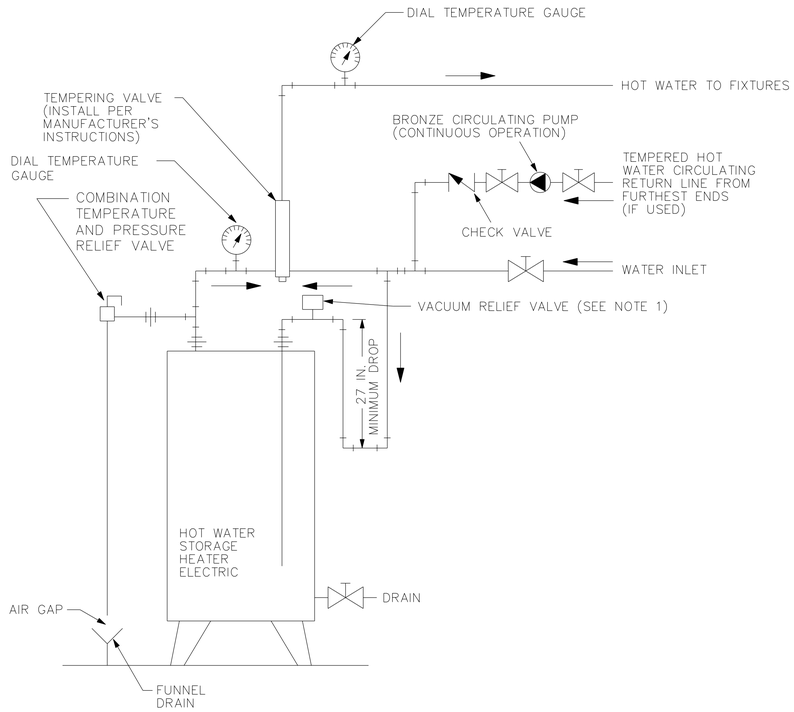

ELECTRIC WATER HEATER (2)

NO SCALE — P-202 | P-301, M-706

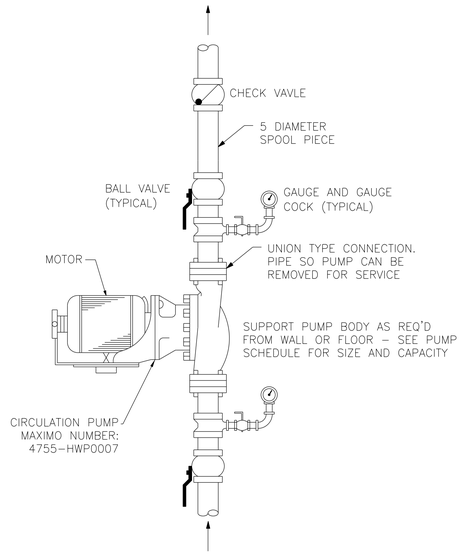

CIRCULATION PUMP (3)

NO SCALE — P-202 | P-301

GENERAL NOTES:

1. REFER TO SHEET P-001 FOR GENERAL NOTES APPLYING TO ALL MECHANICAL SHEETS.

ALABAMA LICENSED NO. 25590 PROFESSIONAL ENGINEER DESIDERIO HERNANDEZ

WARNING

DO NOT SCALE THIS DRAWING

THIS DRAWING WAS DESIGNED TO BE PRINTED AT A NASA SHEET SIZE: MSFC STD. SIZE 40" X 28"

REV.	BY	DATE	REVISION	C.I. NO.	APPROVED

Marshall Space Flight Center
Huntsville, Alabama 35812

REVITALIZE BUILDING
MECHANICAL SYSTEMS (4755)

PLUMBING DETAILS

AE FIRM: GOODWYN | MILLS | CAWOOD — MERRICK & COMPANY — JOINT VENTURE

NASA AE CONTRACT NO. NASA- NNM12AA49C NNM12AA68T

SUBMITTED: JENNIFER LANDRY

APPROVAL RECOMMENDED: ANDY ROLAND, AS22 PROJECT A/E

APPROVED: JIMMY GUARIN

AE: DATE: 02/28/2014

APPROVAL RECOMMENDED: ANDY ROLAND, AS22 SUPPORT A/E

AS22 GROUP LEAD DATE:

DESIGNED J.MATTHEWS
DRAWN J.MATTHEWS
CHECKED D.HERNANDEZ

APPROVAL RECOMMENDED: NELSON OLINGER, AS22 TEAM LEAD

DRAWING NO. FAC-DA-4755-PD301

SCALE: 1/8"=1'-0"

SPEC. NO. FAC M5057

SHEET __ OF __

FINAL SUBMITTAL
ISSUED FOR CONSTRUCTION

SIGNATURES ON INDEX SHEET INDICATE ACCEPTANCE OF THIS SHEET

REF. NO. 06 OF 08

P301

MSFC-FORM 232 REV. 8-21-89-RCL

MSFC Master Bid Disk 03-26-2014

GENERAL NOTES:

1. REFER TO SHEET P-001 FOR GENERAL NOTES APPLYING TO ALL MECHANICAL SHEETS.
2. LIGHT LINEWEIGHTS AND NOTED ITEMS TO REMAIN SHALL REMAIN AS IS.
3. ALTERNATIVE #2 INCLUDES REPLACEMENT OF HW LINES.
4. ALTERNATIVE #3 INCLUDES REPLACEMENT OF CW LINES AND SANITARY AND VENT LINES LOCATED IN REWORKED AREAS AS DESIGNATED ON FLOOR PLANS.

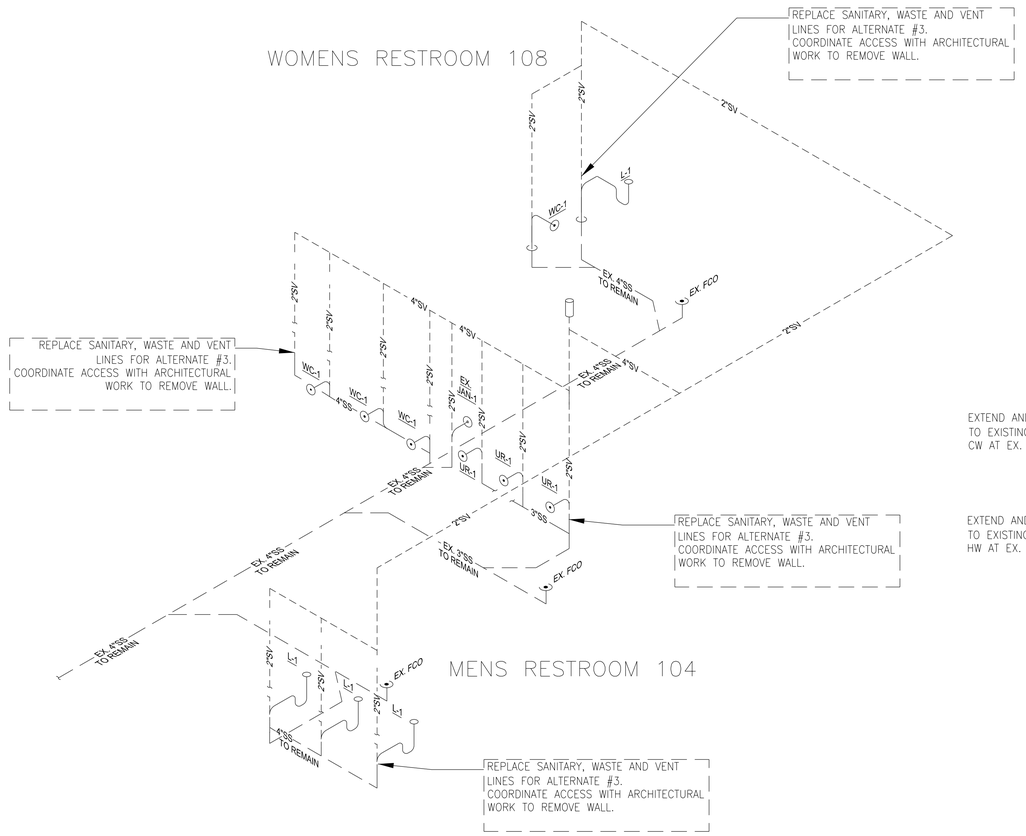

SANITARY RISER
NO SCALE
1 / P-401

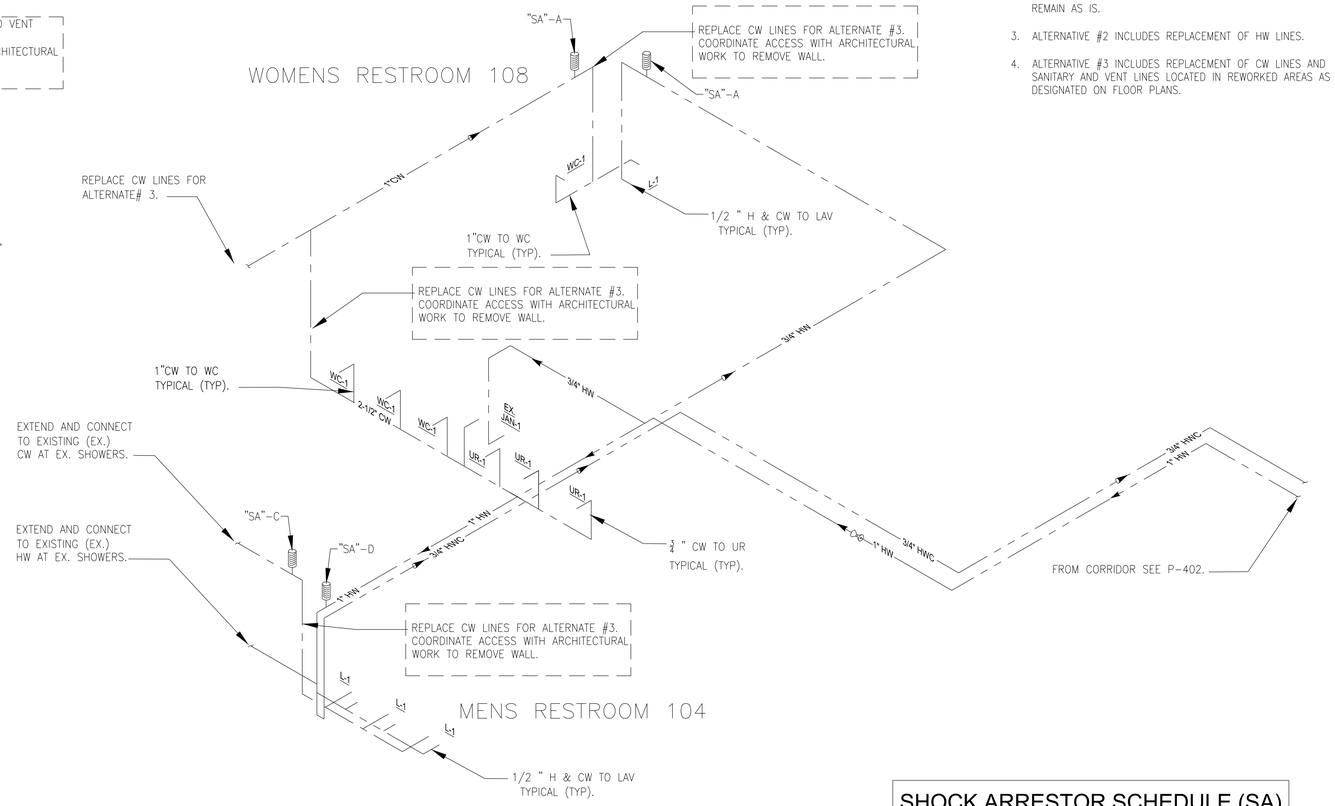

WATER RISER
NO SCALE
2 / P-401

SHOCK ARRESTOR SCHEDULE (SA)		
PDI #	FIXTURE UNIT	CONNECTION SIZE (IN.)
A	1 - 11	3/4"
B	12 - 32	1"
C	33 - 60	1"
D	61 - 113	1"

ALABAMA LICENSED NO. 25590 PROFESSIONAL ENGINEER DESIDERIO HERNANDEZ

WARNING
DO NOT SCALE THIS DRAWING
THIS DRAWING WAS DESIGNED TO BE PRINTED AT A NASA SHEET SIZE: MSFC STD. SIZE 40" X 28"

REV.	BY	DATE	REVISION	C.I. NO.	APPROVED

Marshall Space Flight Center
Huntsville, Alabama 35812

REVITALIZE BUILDING MECHANICAL SYSTEMS (4755)

PLUMBING RISER DIAGRAMS

AE FIRM:

NASA AE CONTRACT NO.
NASA- NNM12AA49C
NNM12AA68T

SUBMITTED: JENNIFER LANDRY
APPROVAL RECOMMENDED: ANDY ROLAND, AS22 PROJECT A/E
APPROVED: JIMMY GUARIN
AE: DATE: 02/28/2014
APPROVAL RECOMMENDED: ANDY ROLAND, AS22 SUPPORT A/E
AS22 GROUP LEAD DATE:
DESIGNED: J.MATTHEWS
DRAWN: J.MATTHEWS
CHECKED: D.HERNANDEZ
APPROVAL RECOMMENDED: NELSON OLINGER, AS22 TEAM LEAD
SCALE: 1/8"=1'-0"
SPEC. NO. FAC M5057
DRAWING NO. FAC-DA-4755-PD301
SHEET __ OF __

FINAL SUBMITTAL
ISSUED FOR CONSTRUCTION

SIGNATURES ON INDEX SHEET INDICATE ACCEPTANCE OF THIS SHEET

REF. NO. P401
07 OF 08

MSFC-FORM 232 REV. 8-21-89-RCL

MSFC Master Bid Disk 03-26-2014

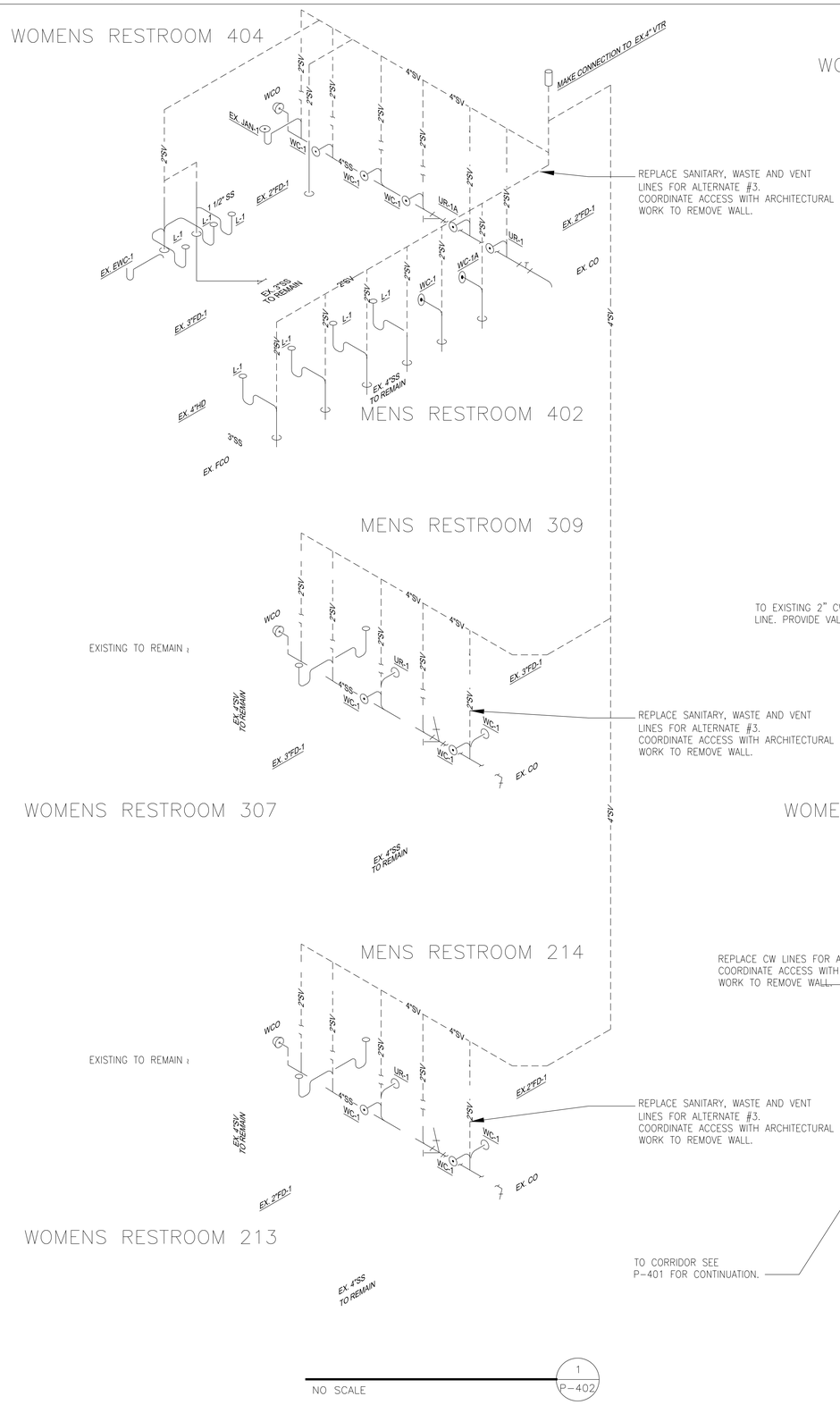

NO SCALE — 1 / P-402

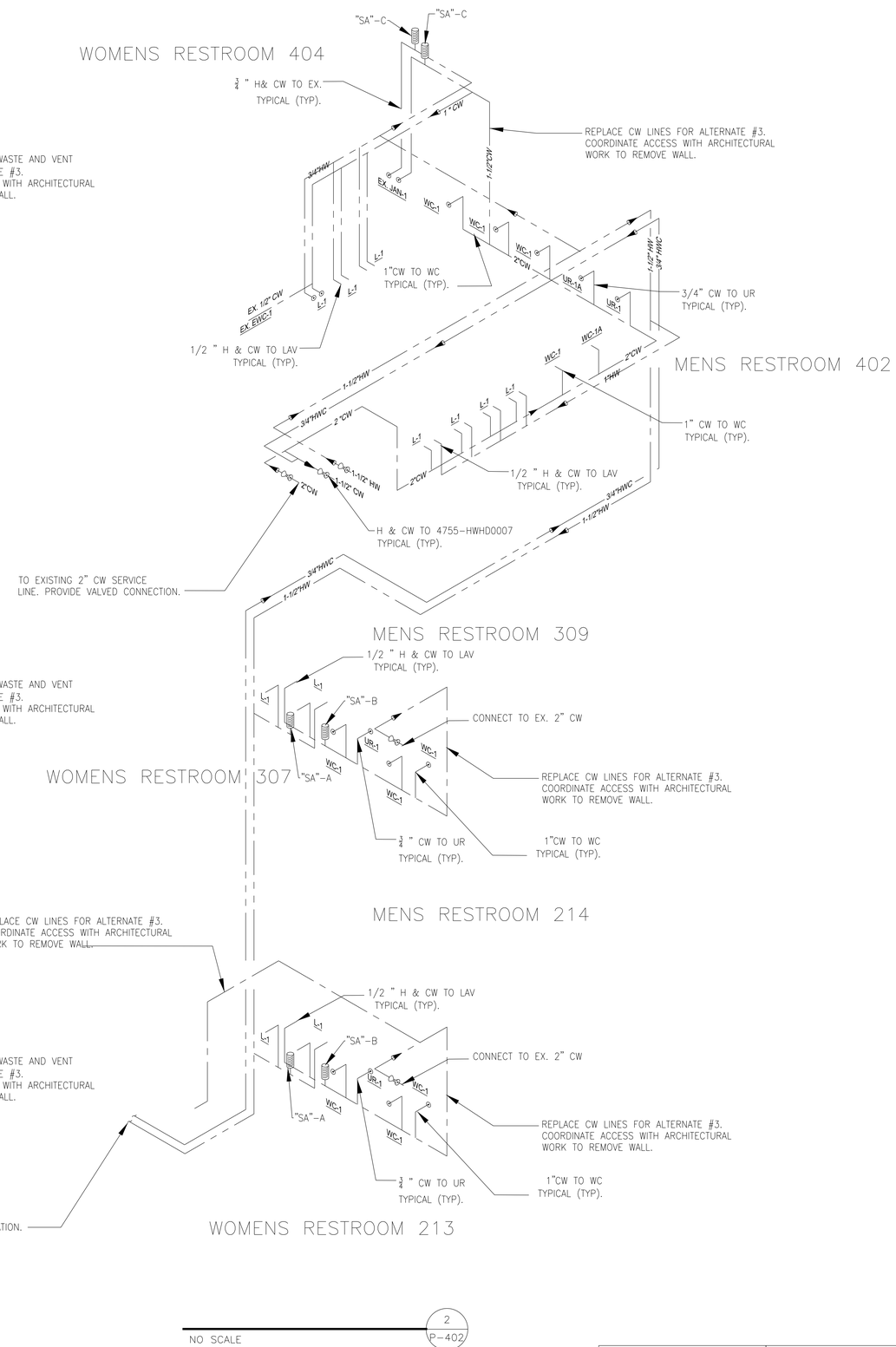

NO SCALE — 2 / P-402

GENERAL NOTES:

1. REFER TO SHEET P-001 FOR GENERAL NOTES APPLYING TO ALL MECHANICAL SHEETS.
2. LIGHT LINEWEIGHTS AND NOTED ITEMS TO REMAIN SHALL REMAIN AS IS.
3. ALTERNATIVE #2 INCLUDES REPLACEMENT OF HW LINES.
4. ALTERNATIVE #3 INCLUDES REPLACEMENT OF CW LINES AND SANITARY AND VENT LINES LOCATED IN REWORKED AREAS AS DESIGNATED ON FLOOR PLANS.

SHOCK ARRESTOR SCHEDULE (SA)

PDI #	FIXTURE UNIT	CONNECTION SIZE (IN.)
A	1 - 11	3/4"
B	12 - 32	1"
C	33 - 60	1"
D	61 - 113	1"

ALABAMA LICENSED NO. 25590 PROFESSIONAL ENGINEER DESIDERIO HERNANDEZ

WARNING
DO NOT SCALE THIS DRAWING
THIS DRAWING WAS DESIGNED TO BE PRINTED AT A NASA SHEET SIZE: MSFC STD. SIZE 40" X 28"

REV.	BY	DATE	REVISION	C.I. NO.	APPROVED

Marshall Space Flight Center
Huntsville, Alabama 35812

REVITALIZE BUILDING
MECHANICAL SYSTEMS (4755)
PLUMBING RISER DIAGRAMS

AE FIRM:

NASA AE CONTRACT NO.
NASA: NNM12AA49C
NNM12AA68T

SUBMITTED: JENNIFER LANDRY
APPROVAL RECOMMENDED: ANDY ROLAND, AS22 PROJECT A/E
APPROVED: JIMMY GUARIN
AE: DATE: 02/28/2014
APPROVAL RECOMMENDED: ANDY ROLAND, AS22 SUPPORT A/E
AS22 GROUP LEAD DATE:
DESIGNED J.MATTHEWS
DRAWN J.MATTHEWS
CHECKED D.HERNANDEZ
APPROVAL RECOMMENDED: NELSON OLINGER, AS22 TEAM LEAD
DRAWING NO. FAC-DA-4755-PD301
SCALE: 1/8"=1'-0"
SPEC. NO. FAC M5057
SHEET __ OF __

FINAL SUBMITTAL
ISSUED FOR CONSTRUCTION

SIGNATURES ON INDEX SHEET INDICATE ACCEPTANCE OF THIS SHEET

REF. NO. 08 OF 08 **P402**

MSFC-FORM 232 REV. 8-21-89/RCL

MSFC Master Bid Disk 03-26-2014

A | B | C | D | E | F | G

ELECTRICAL LEGEND

EX	EXISTING
	ABOVE GROUND CONDUIT
	BELOW GROUND WIRE OR CONDUIT, CONCRETE ENCASED
S	WALL SWITCH SPST 48" AFF TO CENTER UNO 20A 120/277V P & S #: PS 20 AC1-I
S_M	MOTOR RATED 20 OR 30 AMP 1 POLE TOGGLE SWITCH.
	STRIP LIGHT WITH BATTERY (SEE SCHEDULE)
	STRIP LIGHT (SEE SCHEDULE)
	TRUE NORTH OR PLAN NORTH ARROW
	NON-FUSED DISCONNECT, TYPICAL 30/3/600V
	DISCONNECT TO BE REMOVED
	HOME RUN TO PANEL
V	VARIABLE FREQUENCY DRIVE
A / AE	LIGHTING DESIGNATION
K — K	KEY INTERLOCK - (MECHANICAL)
	MOLDED CASE CIRCUIT BREAKER
	FUSE
	CURRENT TRANSFORMER
	POTENTIAL TRANSFORMER
AS A	AMMETER WITH SWITCH
VS V	VOLTMETER WITH SWITCH
	SOLENOID ACTUATED CONTACTS
	THERMAL OVERLOAD
5	MOTOR. NUMBER INDICATES HORSEPOWER RATING.
	TRANSFORMER
	NON-FUSIBLE SWITCH
PH	POTHEAD
	SURGE CAPACITOR
	CONTROLLER
	FUSIBLE DISCONNECT
	PANEL
	WIRE 2#12, 1#12G - 3/4"C UNO
T	DRY TYPE TRANSFORMER

GENERAL NOTES

1. ELECTRICAL EQUIPMENT SHALL BE FULLY RATED FOR THE FAULT CURRENT INDICATED ON THE PLANS. NO SERIES RATING WILL BE ACCEPTED.
2. SEAL ALL PENETRATIONS IN ACCORDANCE WITH A UL LISTED METHOD TO MAINTAIN THE UL RATING OF THE WALL AS INDICATED IN ARCHITECTURAL PLANS.
3. SURFACE MOUNTED CONDUIT, INSTALLED IN AREAS SUBJECT TO DAMAGE, OR ANY CONDUIT INSTALLED WITHIN 8' OF THE FINISHED FLOOR, SHALL BE GALVANIZED RIGID STEEL CONDUIT (GRC) UNO.
4. CONTRACTOR SHALL PROVIDE TYPE WRITTEN PANEL SCHEDULE IN REPLACED PANELS.
5. ELECTRICAL DRAWINGS ARE DIAGRAMMATIC IN NATURE. CONTRACTOR SHALL BE RESPONSIBLE TO COORDINATE ACTUAL ARRANGEMENT WITH FACILITY.
6. CONTRACTOR SHALL FIELD VERIFY AND COORDINATE CIRCUIT ROUTING AS REQUIRED TO MEET SCHEMATIC INTENT OF THE PLANS.

HP, CIRCUIT BREAKER & WIRE SCHEDULE

HP	AMPS	WIRE SIZE
1	15	3#12 & 1#12G - 3/4"C
1.5	15	3#12 & 1#12G - 3/4"C
2	15	3#12 & 1#12G - 3/4"C
3	15	3#12 & 1#12G - 3/4"C
7.5	20	3#12 & 1#12G - 3/4"C
10	25	3#10 & 1#10G - 3/4"C
15	40	3#8 & 1#10G - 3/4"C
20	60	3#6 & 1#10G - 1"C
NOTE: UNLESS OTHERWISE NOTED FOR VOLTAGE DROP		

ELECTRICAL ABBREVIATIONS

A, AMP	AMPERE
ACSR	ALUMINUM CONDUCTOR STEEL-REINFORCED
AF	AMPS FRAME
AIC	AMPS INTERRUPTING CAPACITY (SYM RMS)
AT	AMPS TRIP
AWG	AMERICAN WIRE GAUGE
(#)C	FIXTURE DESIGNATION (#) INDICATES # OF FIXTURES TOTAL
C	CONDUIT
CKT	CIRCUIT
CU	COPPER
ELEC	ELECTRIC OR ELECTRICAL
EPR	ETHYLENE-PROPYLENE RUBBER INSULATION
EXIST	EXISTING
GFI	GROUND FAULT INTERRUPTER
G	GROUND
HP	HORSEPOWER
KV	KILOVOLT
KVA	KILOVOLT AMPERES
KW	KILOWATT
KWH	KILOWATT HOURS
MIN	MINIMUM
N12	NEMA 12 RATED FOR DUST ENCLOSURE
N3R	NEMA 3R RATED FOR EXTERIOR USE
NEC	NATIONAL ELECTRIC CODE
PNL	PANEL
P,PH	PHASE
PSI	POUNDS PER SQUARE INCH
PVC	POLYVINYL CHLORIDE
RECPT	RECEPTACLE
REQD	REQUIRED
RGS	RIGID GALVANIZED STEEL
RU	RACK UNIT
SPEC	SPECIFICATIONS
SWBD	SWITCHBOARD
TEL	TELEPHONE
TVSS	TRANSIENT VOLTAGE SURGE SUPPRESSION
TYP	TYPICAL
UG	UNDERGROUND
UNO	UNLESS NOTED OTHERWISE
V	VOLT
VA	VOLT AMPERE
W	WEST
WP	WEATHERPROOF
XFMR	TRANSFORMER

ALL WORK SHOWN ON THIS SHEET IS BASE BID.

WARNING
DO NOT SCALE THIS DRAWING
THIS DRAWING WAS DESIGNED TO BE PRINTED AT A NASA SHEET SIZE: MSFC STD. SIZE 40" X 28"

REV	BY	DATE	REVISION	C.I. NO.	APPROVED

Marshall Space Flight Center
Huntsville, Alabama 35812

REVITALIZE BUILDING
MECHANICAL SYSTEMS (4755)

GENERAL NOTES & LEGENDS

FINAL SUBMITTAL
FOR CONSTRUCTION

SIGNATURES ON INDEX SHEET INDICATE ACCEPTANCE OF THIS SHEET

REF. NO. E001 01 OF 17

AE FIRM: GOODWYN | MILLS | CAWOOD — MERRICK & COMPANY — JOINT VENTURE

NASA AE CONTRACT NO. NNM12AA49C NNM12AA68T

SUBMITTED: JENNIFER LANDRY
APPROVAL RECOMMENDED: ANDY ROWLAND, AS22 PROJECT A/E
APPROVED: JIMMY GUARIN, AS22 GROUP LEAD, DATE: 11/04/13
AE: DATE: 11/04/13
DESIGNED: S. CRITTENDEN
DRAWN: M. PATE
CHECKED: J. AVERRETT
APPROVAL RECOMMENDED: ANDY ROWLAND, AS22 SUPPORT A/E
APPROVAL RECOMMENDED: NELSON OLINGER, AS22 TEAM LEAD
SCALE: NO SCALE
SPEC. NO. M5057

DRAWING NO.
FAC-DA-4755-E001
SHEET __ OF __

PLAN NOTES

1. EXISTING EQUIPMENT TO BE REMOVED. MAXIMO NUMBER TO BE REUSED IN A DIFFERENT LOCATION.
2. EXISTING EQUIPMENT TO BE REPLACED.
3. EXISTING EQUIPMENT TO BE REPLACED. REUSE MAXIMO NUMBER AS SHOWN ON NEW WORK.

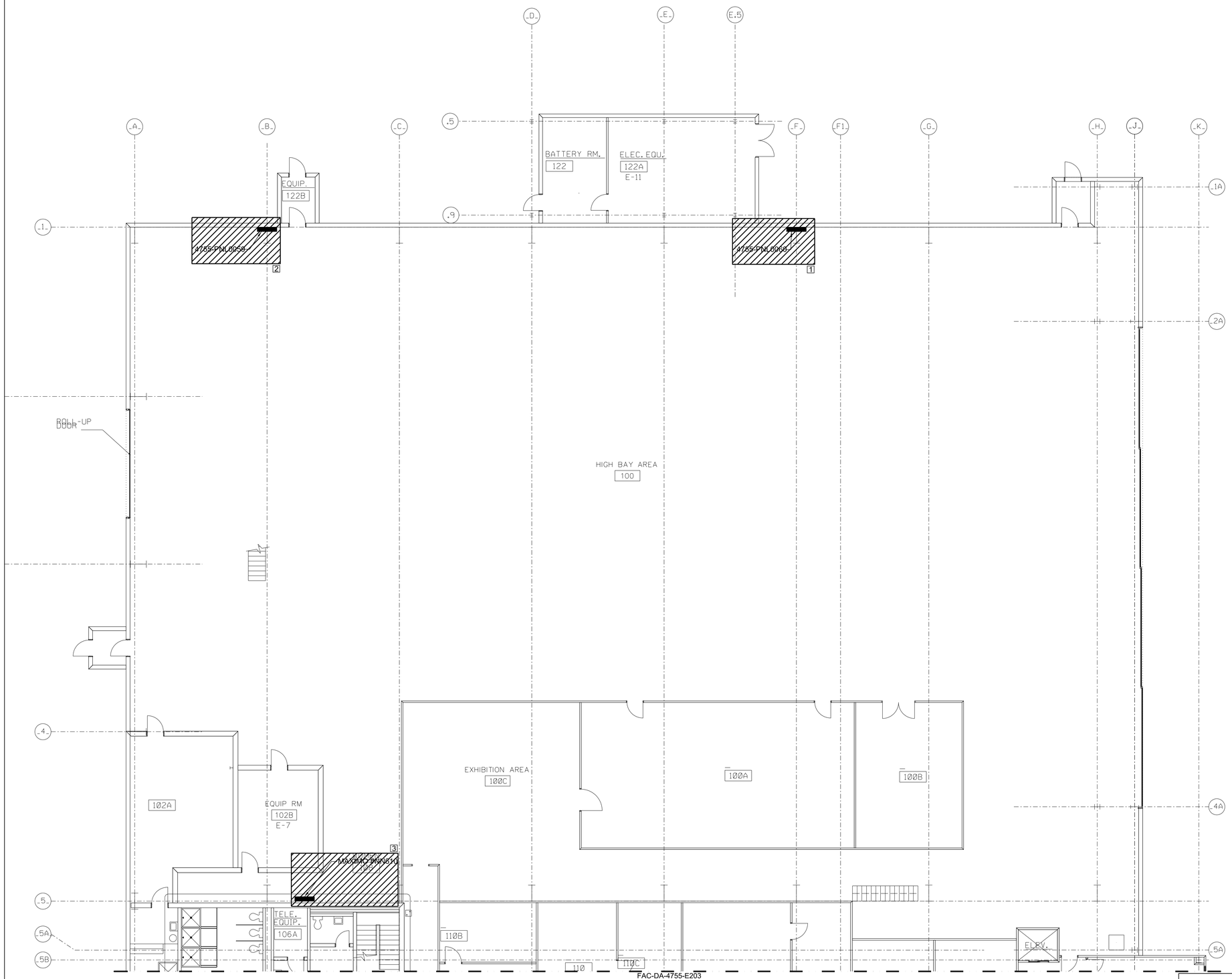

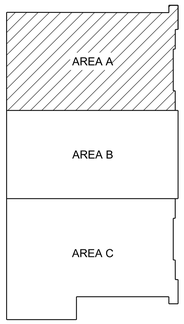

BUILDING 4755
KEY PLAN
NOT TO SCALE

0 4' 8' 16'
SCALE:1/8"=1'-0"

1 E101 DEMO ELECTRICAL PLAN - 1ST FLOOR AREA A
1/8"=1'-0"

ALL WORK SHOWN ON THIS SHEET IS BASE BID.

WARNING
DO NOT SCALE THIS DRAWING
THIS DRAWING WAS DESIGNED TO BE PRINTED AT A NASA SHEET SIZE: MSFC STD. SIZE 40" X 28"

REV	BY	DATE	REVISION	C.I. NO.	APPROVED

Marshall Space Flight Center
Huntsville, Alabama 35812

REVITALIZE BUILDING
MECHANICAL SYSTEMS (4755)

DEMO ELECTRICAL PLAN - 1ST FLOOR AREA A

FINAL SUBMITTAL
FOR CONSTRUCTION

SIGNATURES ON INDEX SHEET INDICATE ACCEPTANCE OF THIS SHEET

REF. NO. E101 02 OF 17

AE FIRM: GOODWYN | MILLS | CAWOOD — MERRICK & COMPANY — JOINT VENTURE

NASA AE CONTRACT NO. NNM12AA49C NNM12AA68T

SUBMITTED: JENNIFER LANDRY		APPROVAL RECOMMENDED: ANDY ROWLAND, AS22 PROJECT A/E	APPROVED: JIMMY GUARIN
AE:	DATE: 11/04/13	APPROVAL RECOMMENDED: ANDY ROWLAND, AS22 SUPPORT A/E	AS22 GROUP LEAD — DATE: 11/04/13
DESIGNED	S. CRITTENDEN		DRAWING NO.
DRAWN	M. PATE	APPROVAL RECOMMENDED: NELSON OLINGER, AS22 TEAM LEAD	FAC-DA-4755-E101
CHECKED	J. AVERRETT		
SCALE: AS SHOWN		SPEC. NO. M5057	SHEET __ OF __

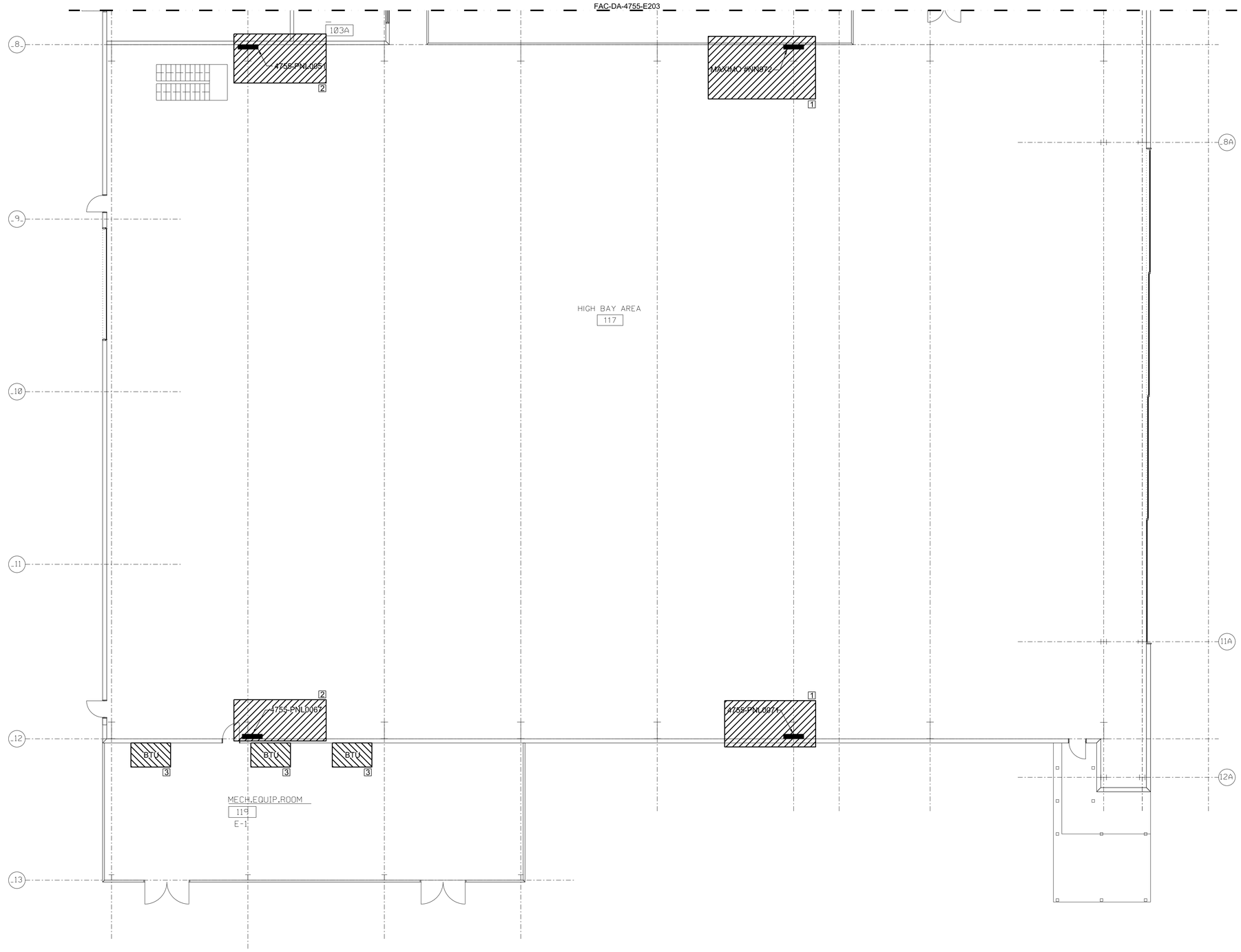

PLAN NOTES

1. EXISTING EQUIPMENT TO BE REMOVED.
2. EXISTING EQUIPMENT TO BE REPLACED.

ADD ALT #1 NOTES

3. CONTRACTOR SHALL REMOVE PIPE AND WIRE BACK TO ASSOCIATED PANELBOARD.

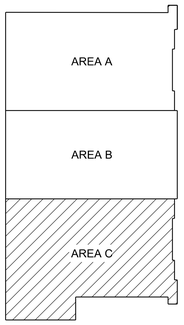

BUILDING 4755
KEY PLAN
NOT TO SCALE

0 4' 8' 16'
SCALE:1/8"=1'-0"

1 E102 DEMO ELECTRICAL PLAN - 1ST FLOOR AREA C
1/8"=1'-0"

ALL WORK SHOWN ON THIS SHEET IS BASE BID, EXCEPT FOR NOTED ADD ALT #1.

WARNING
DO NOT SCALE THIS DRAWING
THIS DRAWING WAS DESIGNED TO BE PRINTED AT A NASA SHEET SIZE: MSFC STD. SIZE 40" X 28"

REV.	BY	DATE	REVISION	C.I. NO.	APPROVED

Marshall Space Flight Center
Huntsville, Alabama 35812

REVITALIZE BUILDING
MECHANICAL SYSTEMS (4755)

DEMO ELECTRICAL PLAN - 1ST FLOOR AREA C

FINAL SUBMITTAL
FOR CONSTRUCTION

SIGNATURES ON INDEX SHEET INDICATE ACCEPTANCE OF THIS SHEET

REF. NO. E102 03 OF 17

AE FIRM: GOODWYN | MILLS | CAWOOD MERRICK & COMPANY
JOINT VENTURE

NASA AE CONTRACT NO. NNM12AA49C NNM12AA68T

SUBMITTED: JENNIFER LANDRY
APPROVAL RECOMMENDED: ANDY ROWLAND, AS22 PROJECT A/E
APPROVED: JIMMY GUARIN, AS22 GROUP LEAD, DATE: 11/04/13
AE: DATE: 11/04/13
DESIGNED: S. CRITTENDEN
DRAWN: M. PATE
CHECKED: J. AVERRETT
APPROVAL RECOMMENDED: ANDY ROWLAND, AS22 SUPPORT A/E
APPROVAL RECOMMENDED: NELSON OLINGER, AS22 TEAM LEAD
SCALE: AS SHOWN
SPEC. NO. M5057

DRAWING NO. FAC-DA-4755-E102
SHEET __ OF __

MSFC Master Bid Disk 03-26-2014

PLAN NOTES

1 EXISTING EQUIPMENT TO BE REMOVED.

2 EXISTING EQUIPMENT TO BE REPLACED.

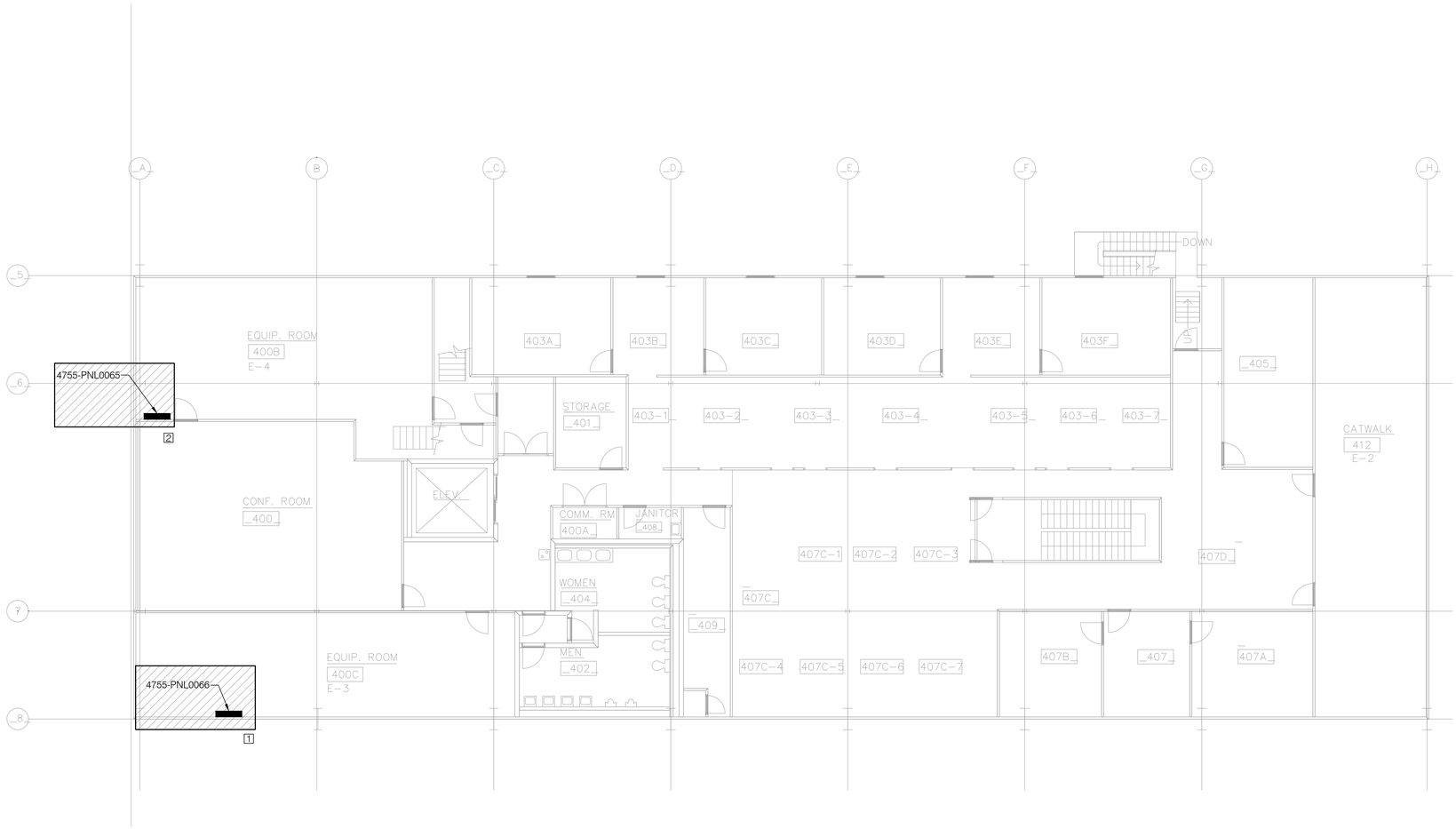

1 E103 DEMO ELECTRICAL PLAN - 4TH FLOOR AREA B

1/8"=1'-0"

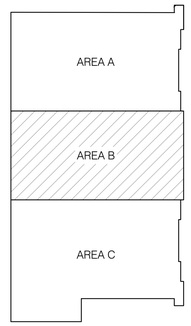

BUILDING 4755
KEY PLAN
NOT TO SCALE

0 4' 8' 16'

SCALE:1/8"=1'-0"

WARNING

DO NOT SCALE THIS DRAWING

THIS DRAWING WAS DESIGNED TO BE PRINTED AT A NASA SHEET SIZE: MSFC STD. SIZE 40" X 28"

REV	BY	DATE	REVISION	C.I. NO.	APPROVED

Marshall Space Flight Center
Huntsville, Alabama 35812

REVITALIZE BUILDING
MECHANICAL SYSTEMS (4755)

DEMO ELECTRICAL PLAN - 4TH FLOOR AREA B

ALABAMA REGISTERED No. 26967 PROFESSIONAL ENGINEER 11.4.13 JOHN AVERRETT

FINAL SUBMITTAL

FOR CONSTRUCTION

SIGNATURES ON INDEX SHEET INDICATE ACCEPTANCE OF THIS SHEET

REF. NO. E103 04 OF 17

AE FIRM: GOODWYN | MILLS | CAWOOD MERRICK & COMPANY JOINT VENTURE

NASA AE CONTRACT NO. NNM12AA49C NNM12AA68T

SUBMITTED: JENNIFER LANDRY

APPROVAL RECOMMENDED: ANDY ROWLAND, AS22 PROJECT A/E

APPROVED: JIMMY GUARIN

AE: DATE: 11/04/13

APPROVAL RECOMMENDED: ANDY ROWLAND, AS22 SUPPORT A/E

AS22 GROUP LEAD DATE: 11/04/13

DESIGNED S. CRITTENDEN

DRAWN M. PATE

CHECKED J. AVERRETT

APPROVAL RECOMMENDED: NELSON OLINGER, AS22 TEAM LEAD

DRAWING NO. FAC-DA-4755-E103

SCALE: AS SHOWN

SPEC. NO. M5057

SHEET __ OF __

ALL WORK SHOWN ON THIS SHEET IS BASE BID.

MSFC Master Bid Disk 03-26-2014

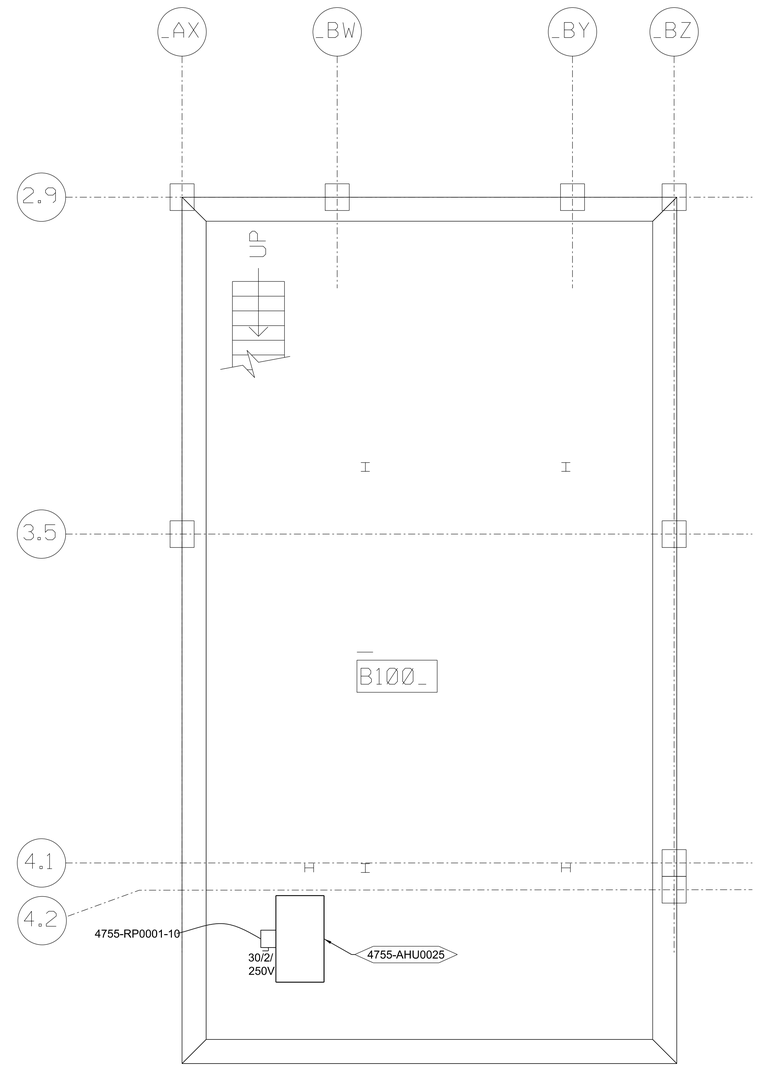

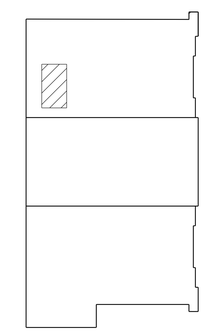

0 2' 4' 8'

SCALE:1/4"=1'-0"

BUILDING 4755
KEY PLAN
NOT TO SCALE

1 E201 ELECTRICAL PLAN - BASEMENT FLOOR
1/4"=1'-0"

ALL WORK SHOWN ON THIS SHEET IS BASE BID.

WARNING
DO NOT SCALE THIS DRAWING
THIS DRAWING WAS DESIGNED TO BE PRINTED AT
A NASA SHEET SIZE: MSFC STD. SIZE 40" X 28"

REV	BY	DATE	REVISION	C.I. NO.	APPROVED		

Marshall Space Flight Center
Huntsville, Alabama 35812

REVITALIZE BUILDING
MECHANICAL SYSTEMS (4755)

ELECTRICAL PLAN - BASEMENT

FINAL SUBMITTAL
FOR CONSTRUCTION

SIGNATURES ON INDEX SHEET INDICATE ACCEPTANCE OF THIS SHEET

REF. NO. E201 05 OF 17

AE FIRM: GOODWYN | MILLS | CAWOOD MERRICK & COMPANY JOINT VENTURE

NASA AE CONTRACT NO. NNM12AA49C NNM12AA68T

SUBMITTED: JENNIFER LANDRY
APPROVAL RECOMMENDED: ANDY ROWLAND, AS22 PROJECT A/E
APPROVED: JIMMY GUARIN

AE: DATE: 11/04/13
DESIGNED S. CRITTENDEN
DRAWN M. PATE
CHECKED J. AVERRETT
APPROVAL RECOMMENDED: ANDY ROWLAND, AS22 SUPPORT A/E
APPROVAL RECOMMENDED: NELSON OLINGER, AS22 TEAM LEAD
AS22 GROUP LEAD DATE: 11/04/13

SCALE: AS SHOWN
SPEC. NO. M5057

DRAWING NO.
FAC-DA-4755-E201
SHEET __ OF __

MSFC Master Bid Disk 03-26-2014

PLAN NOTES

1. EXISTING EQUIPMENT TO REMAIN, NO WORK NEEDED AT THIS TIME.
2. ELECTRICAL CONTRACTOR TO FURNISH DUCT DETECTOR TO MATCH EXISTING FIRE ALARM SYSTEM. MECHANICAL CONTRACTOR TO INSTALL THE DUCT DETECTOR. ELECTRICAL CONTRACTOR TO INTEGRATE DUCT DETECTOR INTO FIRE ALARM SYSTEM.

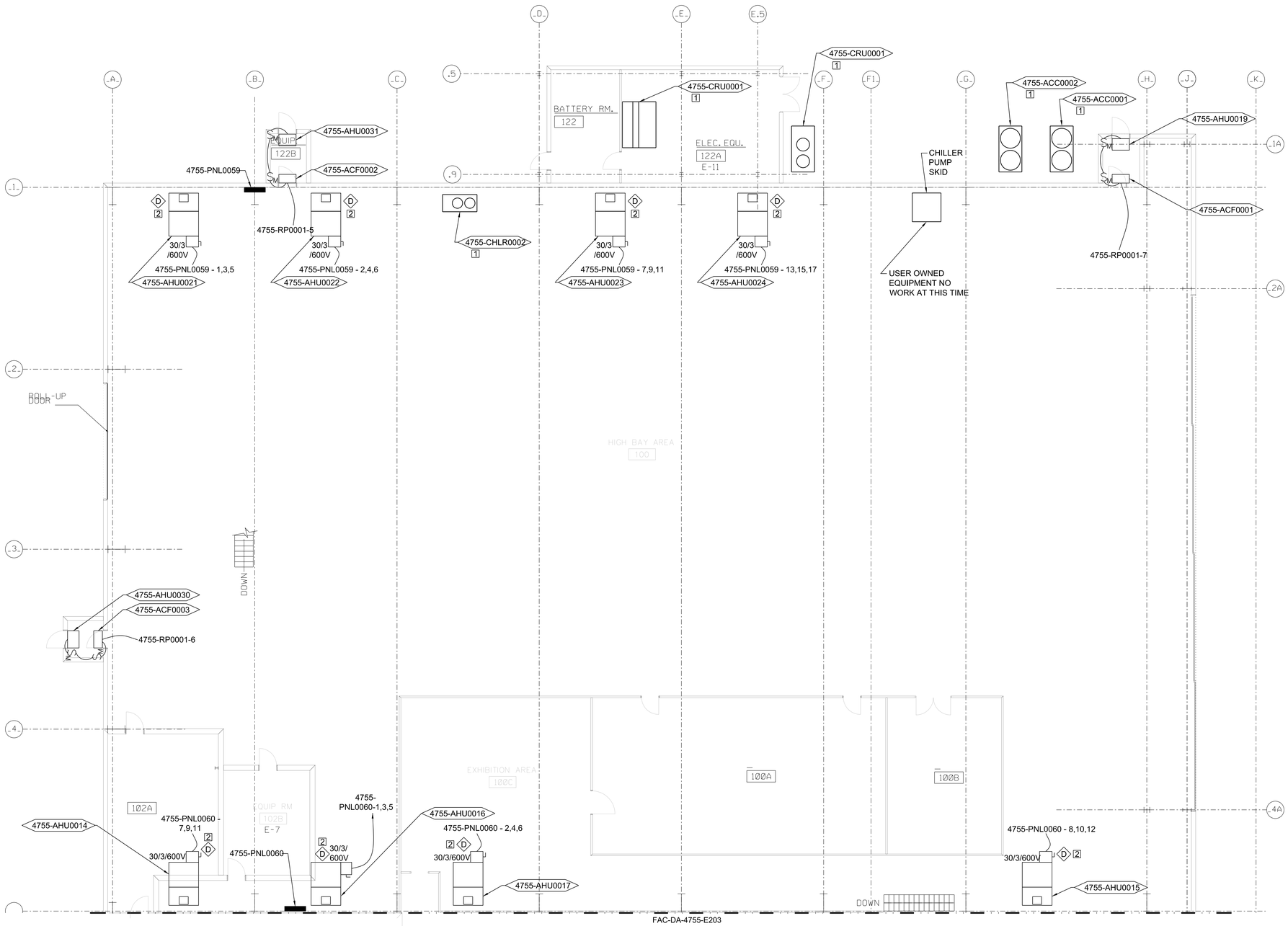

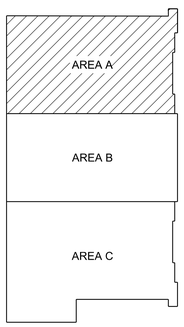

0 4' 8' 16'
SCALE:1/8"=1'-0"

BUILDING 4755
KEY PLAN
NOT TO SCALE

1 E202 ELECTRICAL PLAN - 1ST FLOOR AREA A
1/8"=1'-0"

ALL WORK SHOWN ON THIS SHEET IS BASE BID.

WARNING
DO NOT SCALE THIS DRAWING
THIS DRAWING WAS DESIGNED TO BE PRINTED AT A NASA SHEET SIZE: MSFC STD. SIZE 40" X 28"

REV	BY	DATE	REVISION	C.I. NO.	APPROVED

Marshall Space Flight Center
Huntsville, Alabama 35812

REVITALIZE BUILDING
MECHANICAL SYSTEMS (4755)

ELECTRICAL PLAN - 1ST FLOOR AREA A

FINAL SUBMITTAL
FOR CONSTRUCTION

SIGNATURES ON INDEX SHEET INDICATE ACCEPTANCE OF THIS SHEET

REF. NO. E202 06 OF 17

AE FIRM: GOODWYN MILLS CAWOOD / MERRICK & COMPANY — JOINT VENTURE

NASA AE CONTRACT NO. NNM12AA49C NNM12AA68T

SUBMITTED: JENNIFER LANDRY
AE: DATE: 11/04/13
DESIGNED S. CRITTENDEN
DRAWN M. PATE
CHECKED J. AVERRETT
SCALE: AS SHOWN

APPROVAL RECOMMENDED: ANDY ROWLAND, AS22 PROJECT A/E
APPROVAL RECOMMENDED: ANDY ROWLAND, AS22 SUPPORT A/E
APPROVAL RECOMMENDED: NELSON OLINGER, AS22 TEAM LEAD
SPEC. NO. M5057

APPROVED: JIMMY GUARIN
AS22 GROUP LEAD DATE: 11/04/13

DRAWING NO. FAC-DA-4755-E202
SHEET __ OF __

MSFC Master Bid Disk 03-26-2014

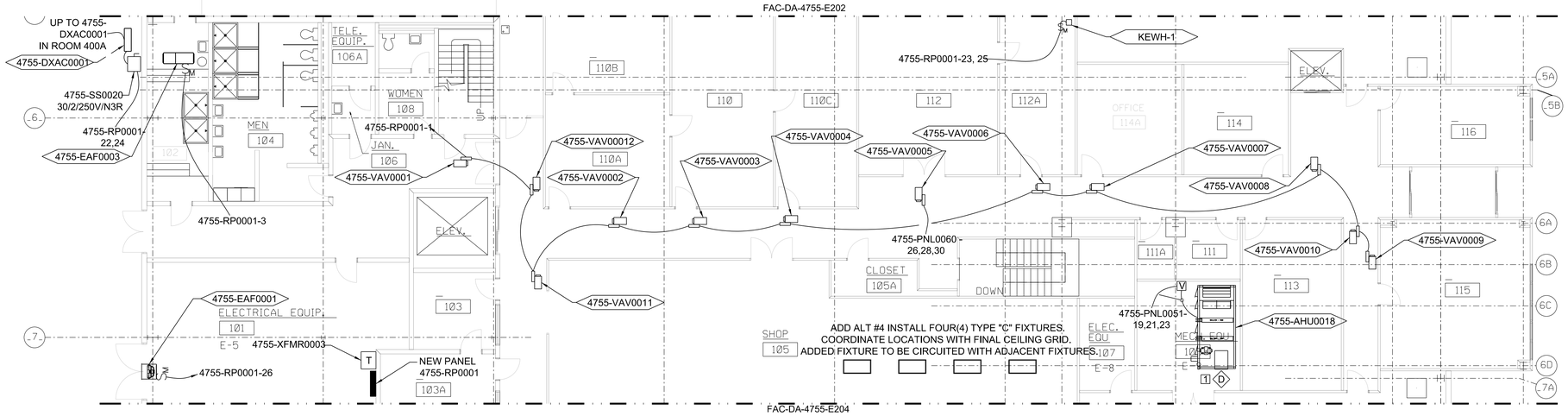

PLAN NOTES

1 ELECTRICAL CONTRACTOR TO FURNISH DUCT DETECTOR TO MATCH EXISTING FIRE ALARM SYSTEM. MECHANICAL CONTRACTOR TO INSTALL THE DUCT DETECTOR. ELECTRICAL CONTRACTOR TO INTEGRATE DUCT DETECTOR INTO FIRE ALARM SYSTEM.

GENERAL NOTES

1. CONTRACTOR SHALL HANG LIGHTS FOR REMOVAL OF CEILING FOR MECHANICAL AND ELECTRICAL WORK. AFTER COMPLETION OF THE WORK THE CONTRACTOR WILL REINSTALL THE LAY-IN LIGHT FIXTURES INTO THE NEW CEILING. COORDINATE EXACT CEILING SPACES TO REMOVE WITH ARCHITECTURAL DRAWINGS.

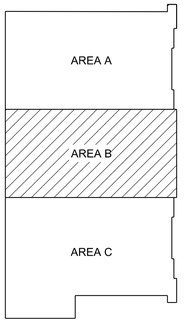

BUILDING 4755
KEY PLAN
NOT TO SCALE

0 4' 8' 16'
SCALE:1/8"=1'-0"

1 E203 ELECTRICAL PLAN - 1ST FLOOR AREA B
1/8"=1'-0"

ALL WORK SHOWN ON THIS SHEET IS BASE BID.

WARNING
DO NOT SCALE THIS DRAWING
THIS DRAWING WAS DESIGNED TO BE PRINTED AT A NASA SHEET SIZE: MSFC STD. SIZE 40" X 28"

REV	BY	DATE	REVISION	C.I. NO.	APPROVED		

Marshall Space Flight Center
Huntsville, Alabama 35812

REVITALIZE BUILDING
MECHANICAL SYSTEMS (4755)

ELECTRICAL PLAN - 1ST FLOOR AREA B

FINAL SUBMITTAL
FOR CONSTRUCTION

SIGNATURES ON INDEX SHEET INDICATE ACCEPTANCE OF THIS SHEET

REF. NO. E203 07 OF 17

AE FIRM: GOODWYN MILLS CAWOOD / MERRICK & COMPANY — JOINT VENTURE

NASA AE CONTRACT NO. NNM12AA49C NNM12AA68T

SUBMITTED: JENNIFER LANDRY
APPROVAL RECOMMENDED: ANDY ROWLAND, A522 PROJECT A/E
APPROVED: JIMMY GUARIN, A522 GROUP LEAD, DATE: 11/04/13

AE: DATE: 11/04/13
DESIGNED S. CRITTENDEN
DRAWN M. PATE
CHECKED J. AVERRETT
SCALE: AS SHOWN
APPROVAL RECOMMENDED: ANDY ROWLAND, A522 SUPPORT A/E
APPROVAL RECOMMENDED: NELSON OLINGER, A522 TEAM LEAD
SPEC. NO. M5057

DRAWING NO. FAC-DA-4755-E203
SHEET __ OF __

MSFC Master Bid Disk 03-26-2014

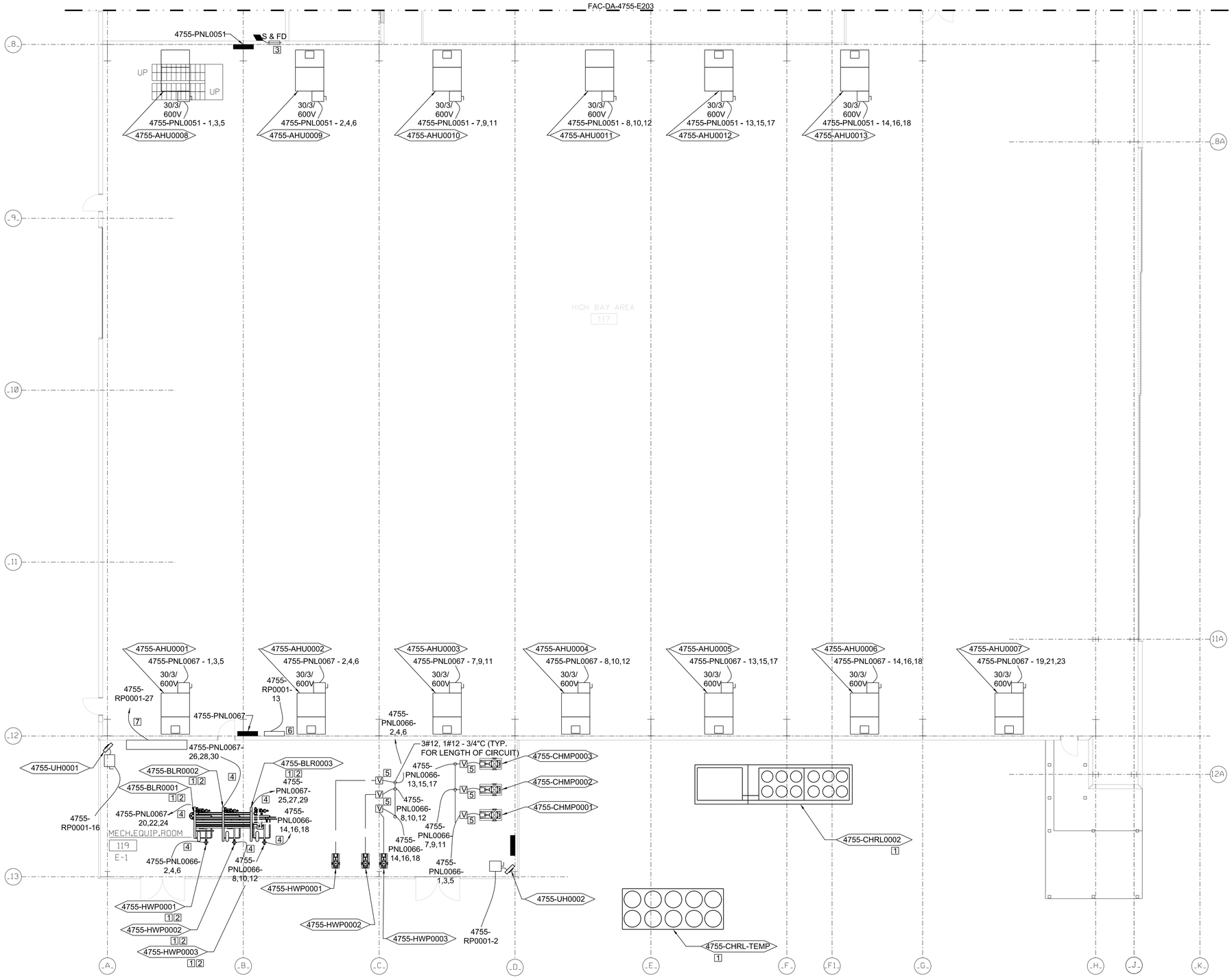

1 E204 ELECTRICAL PLAN - 1ST FLOOR AREA C

1/8"=1'-0"

PLAN NOTES

1. EXISTING EQUIPMENT TO REMAIN. NO WORK NEEDED AT THIS TIME.
2. EXISTING EQUIPMENT TO BE RE-FEED.
3. CONTRACTOR TO FURNISH POWER FROM 4755-RP0001-8 WITH 2#12 & 1#12G - 3/4"C. ELECTRICAL CONTRACTOR TO FURNISH DUCT DETECTOR TO MATCH EXISTING FIRE ALARM SYSTEM. MECHANICAL CONTRACTOR TO INSTALL THE DUCT DETECTOR. ELECTRICAL CONTRACTOR TO INTEGRATE DUCT DETECTOR INTO FIRE ALARM SYSTEM.
4. 3#12 & 1#12G - 3/4"C.
5. CONTRACTOR TO UTILIZED EXISTING RACK TO MOUNT AND INSTALL NEW VFDS.
6. SEE DETAIL MS54 ON SHEET UCS34.

ADD ALT #1 NOTES

7. CONTRACTOR TO PROVIDE POWER FOR UCS METERS TOTAL OF (4) FOUR.

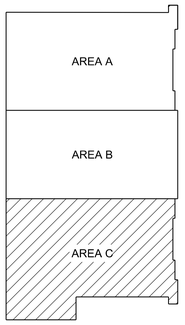

BUILDING 4755
KEY PLAN
NOT TO SCALE

0 4' 8' 16'
SCALE:1/8"=1'-0"

WARNING
DO NOT SCALE THIS DRAWING
THIS DRAWING WAS DESIGNED TO BE PRINTED AT A NASA SHEET SIZE: MSFC STD. SIZE 40" X 28"

REV.	BY	DATE	REVISION	C.I. NO.	APPROVED

Marshall Space Flight Center
Huntsville, Alabama 35812

REVITALIZE BUILDING
MECHANICAL SYSTEMS (4755)

ELECTRICAL PLAN - 1ST FLOOR AREA C

FINAL SUBMITTAL
FOR CONSTRUCTION

SIGNATURES ON INDEX SHEET INDICATE ACCEPTANCE OF THIS SHEET

REF. NO. E204 08 OF 17

AE FIRM: GOODWYN | MILLS | CAWOOD MERRICK & COMPANY JOINT VENTURE

NASA AE CONTRACT NO. NNM12AA49C NNM12AA68T

SUBMITTED: JENNIFER LANDRY
APPROVAL RECOMMENDED: ANDY ROWLAND, AS22 PROJECT A/E
APPROVED: JIMMY GUARIN
AE: DATE: 11/04/13
APPROVAL RECOMMENDED: ANDY ROWLAND, AS22 SUPPORT A/E
AS22 GROUP LEAD DATE: 11/04/13
DESIGNED S. CRITTENDEN
DRAWN M. PATE
CHECKED J. AVERRETT
APPROVAL RECOMMENDED: NELSON OLINGER, AS22 TEAM LEAD
SCALE: AS SHOWN
SPEC. NO. M5057

DRAWING NO. FAC-DA-4755-E204
SHEET __ OF __

ALL WORK SHOWN ON THIS SHEET IS BASE BID, EXCEPT FOR NOTED ADD ALT #1

PLAN NOTES

1 FANS TO BE HUNG IN THE HIGH BAY AREA. COORDINATE EXACT MOUNTING HEIGHT WITH MECHANICAL DRAWINGS.

GENERAL NOTES

1. CONTRACTOR SHALL HANG LIGHTS FOR REMOVAL OF CEILING FOR MECHANICAL AND ELECTRICAL WORK. AFTER COMPLETION OF THE WORK THE CONTRACTOR WILL REINSTALL THE LAY-IN LIGHT FIXTURES INTO THE NEW CEILING. COORDINATE EXACT CEILING SPACES TO REMOVE WITH ARCHITECTURAL DRAWINGS.

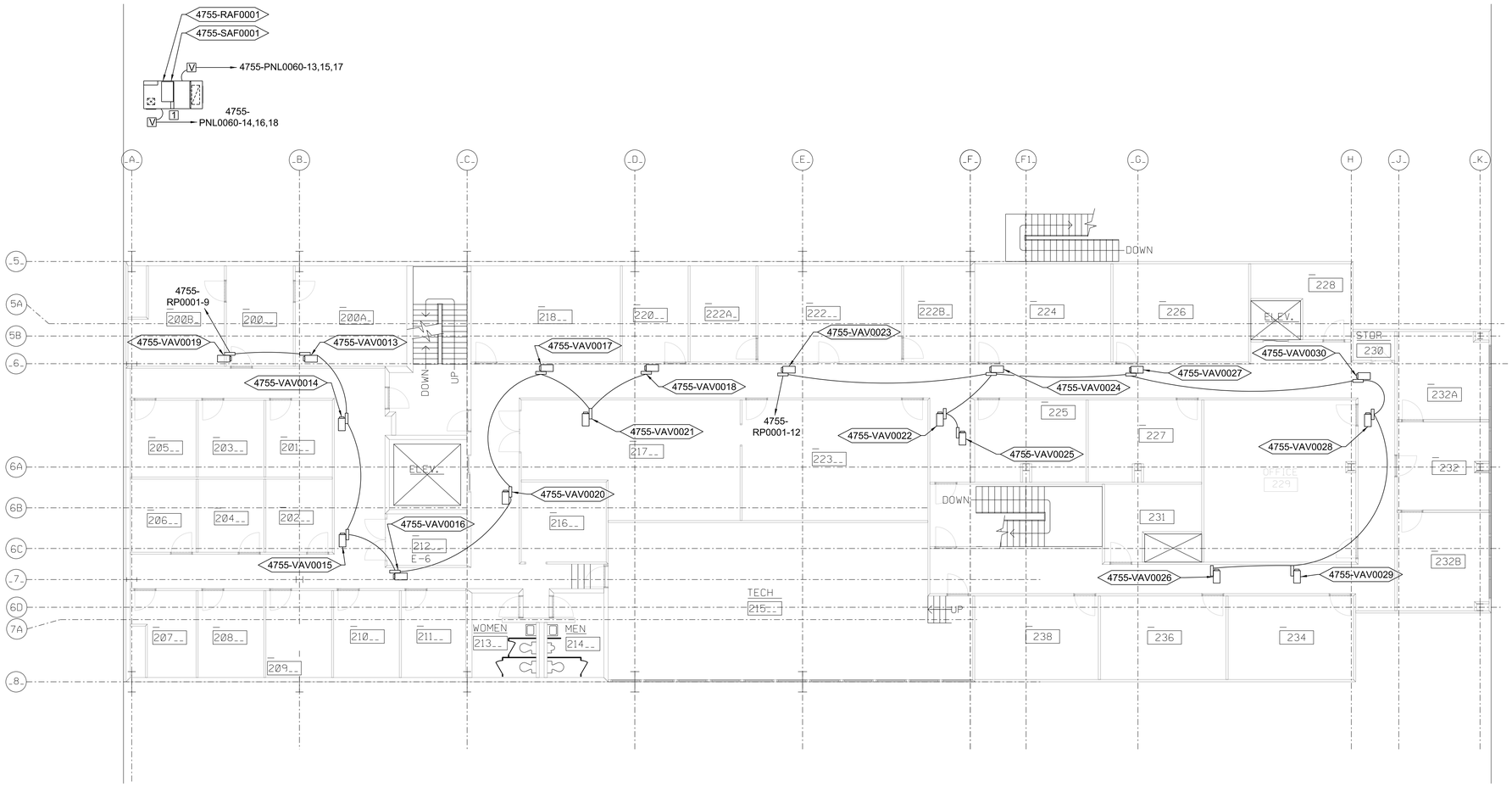

1 E205 ELECTRICAL PLAN - 2ND FLOOR AREA B
1/8"=1'-0"

0 4' 8' 16'
SCALE:1/8"=1'-0"

BUILDING 4755 KEY PLAN
NOT TO SCALE

WARNING
DO NOT SCALE THIS DRAWING
THIS DRAWING WAS DESIGNED TO BE PRINTED AT A NASA SHEET SIZE: MSFC STD. SIZE 40" X 28"

REV	BY	DATE	REVISION	C.I. NO.	APPROVED

Marshall Space Flight Center
Huntsville, Alabama 35812

REVITALIZE BUILDING
MECHANICAL SYSTEMS (4755)

ELECTRICAL PLAN - 2ND FLOOR AREA B

FINAL SUBMITTAL
FOR CONSTRUCTION

SIGNATURES ON INDEX SHEET INDICATE ACCEPTANCE OF THIS SHEET

REF. NO. E205 09 OF 17

AE FIRM: GOODWYN | MILLS | CAWOOD — MERRICK & COMPANY — JOINT VENTURE

NASA AE CONTRACT NO. NNM12AA49C NNM12AA68T

SUBMITTED: JENNIFER LANDRY
APPROVAL RECOMMENDED: ANDY ROWLAND, AS22 PROJECT A/E
APPROVED: JIMMY GUARIN
AE: DATE: 11/04/13
APPROVAL RECOMMENDED: ANDY ROWLAND, AS22 SUPPORT A/E
AS22 GROUP LEAD DATE: 11/04/13
DESIGNED S. CRITTENDEN
DRAWN M. PATE
CHECKED J. AVERRETT
APPROVAL RECOMMENDED: NELSON OLINGER, AS22 TEAM LEAD
SCALE: AS SHOWN
SPEC. NO. M5057

DRAWING NO. FAC-DA-4755-E205
SHEET __ OF __

ALL WORK SHOWN ON THIS SHEET IS BASE BID.

PLAN NOTES

1 EXISTING EQUIPMENT TO REMAIN. NO WORK NEEDED AT THIS TIME.

GENERAL NOTES

1. CONTRACTOR SHALL HANG LIGHTS FOR REMOVAL OF CEILING FOR MECHANICAL AND ELECTRICAL WORK. AFTER COMPLETION OF THE WORK THE CONTRACTOR WILL REINSTALL THE LAY-IN LIGHT FIXTURES INTO THE NEW CEILING. COORDINATE EXACT CEILING SPACES TO REMOVE WITH ARCHITECTURAL DRAWINGS.

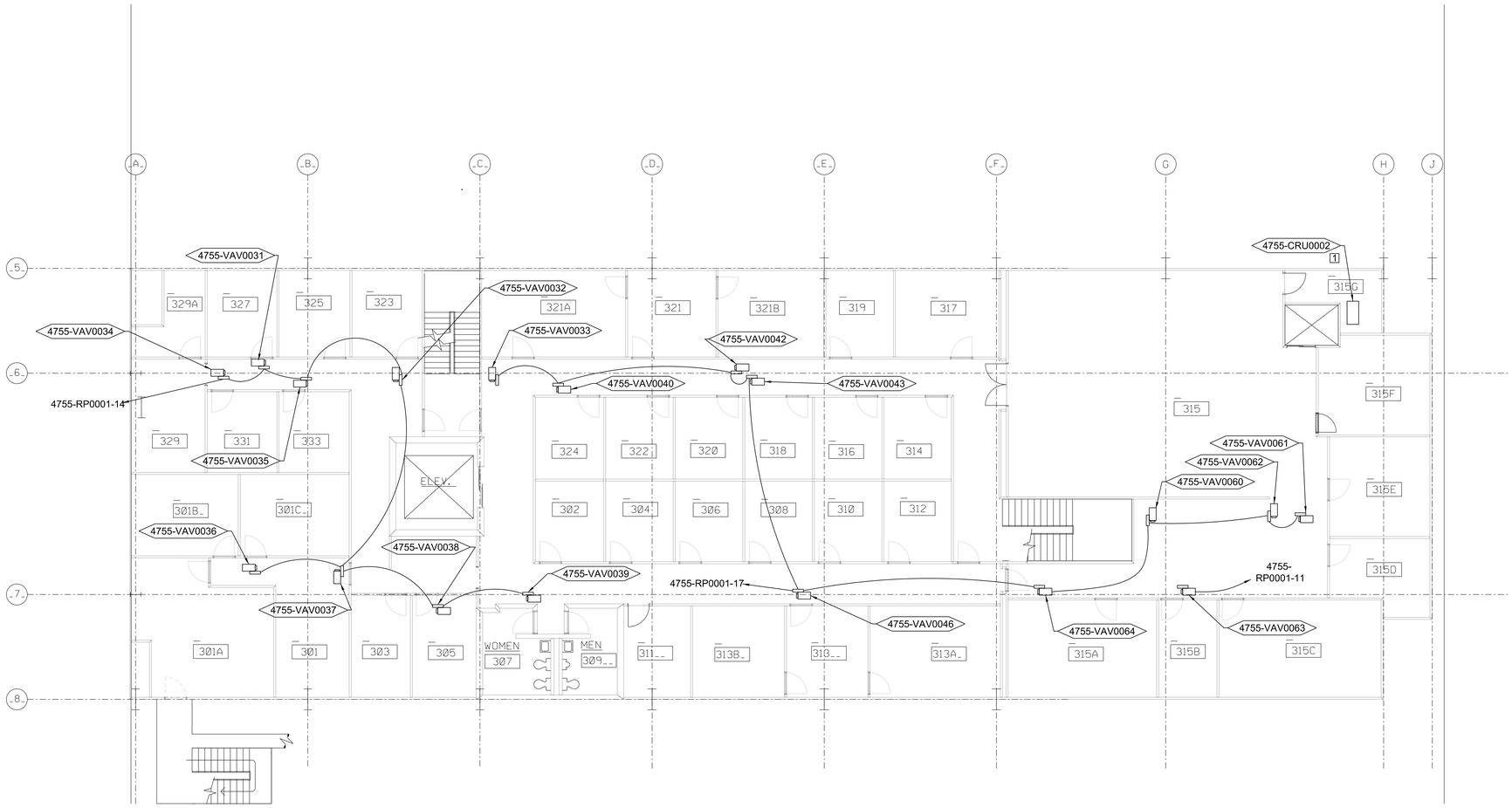

1 E206 ELECTRICAL PLAN - 3RD FLOOR AREA B

1/8"=1'-0"

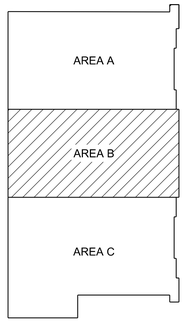

BUILDING 4755
KEY PLAN
NOT TO SCALE

0 4' 8' 16'

SCALE:1/8"=1'-0"

WARNING

DO NOT SCALE THIS DRAWING

THIS DRAWING WAS DESIGNED TO BE PRINTED AT A NASA SHEET SIZE: MSFC STD. SIZE 40" X 28"

REV	BY	DATE	REVISION	C.I. NO.	APPROVED

Marshall Space Flight Center
Huntsville, Alabama 35812

REVITALIZE BUILDING
MECHANICAL SYSTEMS (4755)

ELECTRICAL PLAN - 3RD FLOOR AREA B

FINAL SUBMITTAL
FOR CONSTRUCTION

SIGNATURES ON INDEX SHEET INDICATE ACCEPTANCE OF THIS SHEET

REF. NO. E206 10 OF 17

AE FIRM: GOODWYN | MILLS | CAWOOD & MERRICK & COMPANY JOINT VENTURE

NASA AE CONTRACT NO. NNM12AA49C NNM12AA68T

SUBMITTED: JENNIFER LANDRY

APPROVAL RECOMMENDED: ANDY ROWLAND, AS22 PROJECT A/E

APPROVED: JIMMY GUARIN, AS22 GROUP LEAD, DATE: 11/04/13

AE: DATE: 11/04/13

DESIGNED S. CRITTENDEN

DRAWN M. PATE

CHECKED J. AVERRETT

APPROVAL RECOMMENDED: ANDY ROWLAND, AS22 SUPPORT A/E

APPROVAL RECOMMENDED: NELSON OLINGER, AS22 TEAM LEAD

SCALE: AS SHOWN

SPEC. NO. M5057

DRAWING NO. FAC-DA-4755-E206

SHEET __ OF __

ALL WORK SHOWN ON THIS SHEET IS BASE BID.

MSFC Master Bid Disk 03-26-2014

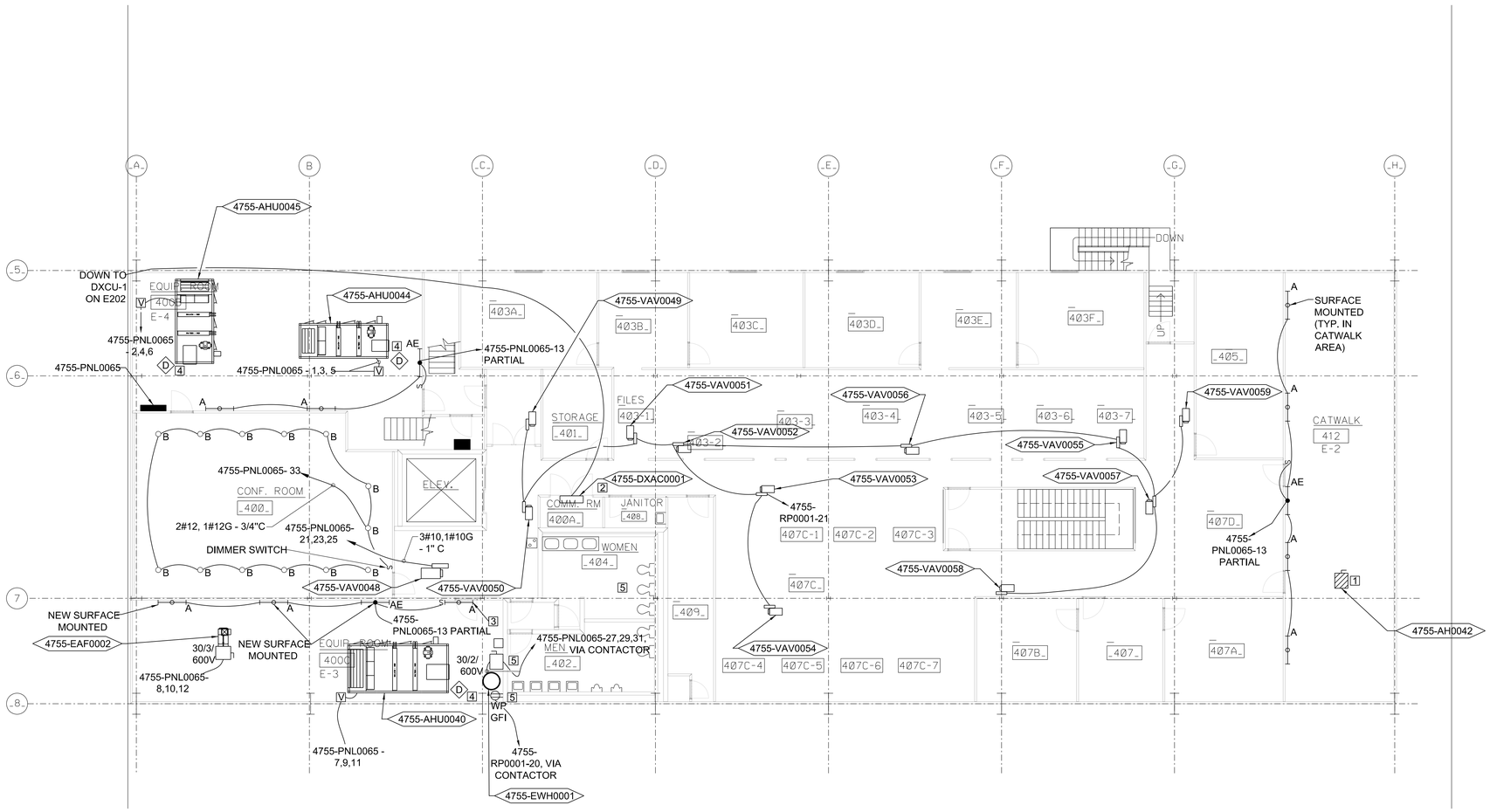

1 E207 ELECTRICAL PLAN - 4TH FLOOR AREA B

1/8"=1'-0"

PLAN NOTES

1. EXISTING EQUIPMENT TO BE REMOVED.
2. TO BE FED FROM DXCU0001 (SHEET E203) 2#10 & 1#10G - 3/4"C.
3. EXISTING TO REMAIN. WRAP WALL MOUNTED.
4. ELECTRICAL CONTRACTOR TO FURNISH DUCT DETECTOR TO MATCH EXISTING FIRE ALARM SYSTEM. MECHANICAL CONTRACTOR TO INSTALL THE DUCT DETECTOR. ELECTRICAL CONTRACTOR TO INTEGRATE DUCT DETECTOR INTO FIRE ALARM SYSTEM.

GENERAL NOTES

1. CONTRACTOR SHALL HANG LIGHTS FOR REMOVAL OF CEILING FOR MECHANICAL AND ELECTRICAL WORK. AFTER COMPLETION OF THE WORK THE CONTRACTOR WILL REINSTALL THE LAY-IN LIGHT FIXTURES INTO THE NEW CEILING. COORDINATE EXACT CEILING SPACES TO REMOVE WITH ARCHITECTURAL DRAWINGS.

ADD ALT #2 NOTES

5. CONTRACTOR SHALL PROVIDE CIRCUITRY TO WATER HEATER. CONTRACTOR SHALL INSTALL A CONTACTOR FOR WATER HEATER AND RECEPTACLE. CONTACTOR SHALL BE SQUARE D MODEL #8903 LG40 VO1 BASIS OF DESIGN. CONTROL WIRING SHALL BE FURNISHED AND INSTALL BY UCS.

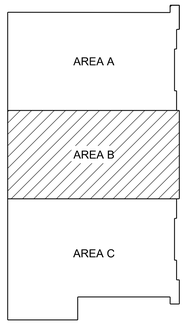

BUILDING 4755 KEY PLAN

NOT TO SCALE

0 4' 8' 16'

SCALE:1/8"=1'-0"

WARNING

DO NOT SCALE THIS DRAWING

THIS DRAWING WAS DESIGNED TO BE PRINTED AT A NASA SHEET SIZE: MSFC STD. SIZE 40" X 28"

REV	BY	DATE	REVISION	C.I. NO.	APPROVED

Marshall Space Flight Center
Huntsville, Alabama 35812

REVITALIZE BUILDING MECHANICAL SYSTEMS (4755)

ELECTRICAL PLAN - 4TH FLOOR AREA B

FINAL SUBMITTAL
FOR CONSTRUCTION

SIGNATURES ON INDEX SHEET INDICATE ACCEPTANCE OF THIS SHEET

REF. NO. E207 11 OF 17

AE FIRM: GOODWYN MILLS CAWOOD / MERRICK & COMPANY — JOIN VENTURE

NASA AE CONTRACT NO. NNM12AA49C NNM12AA68T

SUBMITTED: JENNIFER LANDRY	APPROVAL RECOMMENDED: ANDY ROWLAND, AS22 PROJECT A/E	APPROVED: JIMMY GUARIN	
AE: DATE: 11/04/13	APPROVAL RECOMMENDED: ANDY ROWLAND, AS22 SUPPORT A/E	AS22 GROUP LEAD DATE: 11/04/13	DRAWING NO.
DESIGNED S. CRITTENDEN			FAC-DA-4755-E207
DRAWN M. PATE	APPROVAL RECOMMENDED: NELSON OLINGER, AS22 TEAM LEAD		
CHECKED J. AVERRETT			SHEET __ OF __
SCALE: AS SHOWN	SPEC. NO. M5057		

ALL WORK SHOWN ON THIS SHEET IS BASE BID, EXCEPT FOR NOTED ADD ALT #2.

MSFC Master Bid Disk 03-26-2014

A | B | C | D | E | F | G

ELECTRICAL PANEL SCHEDULE

PANEL	4755-PNL0051	VOLTAGE	277/480
LOCATION	RM 117 (HIGH BAY AREA)	PHASE	3
MOUNTING	SURFACE	WIRE	4
MFR./TYPE	SQUARE D	AMPS	100
MAIN BKR	100A	AIC RATING	18K
MAIN FEEDER SIZE	4#2 & 1#8(G) - 1-1/4"C	FED FROM	SUBSTATION #2

CK1	PH	FRAME & AMPS	LOAD DESCRIPTION	KVA LOAD a∅	b∅	c∅	CK1	PH	FRAME & AMPS	LOAD DESCRIPTION	KVA LOAD a∅	b∅	c∅
1	A	15A/3P	4755-AHU0008	0.6			2	A	15A/3P	4755-AHU0009	0.6		
3	B	-	-		0.6		4	B	-	-		0.6	
5	C	-	-			0.6	6	C	-	-			0.6
7	A	15A/3P	4755-AHU0010	0.6			8	A	15A/3P	4755-AHU0011	0.6		
9	B	-	-		0.6		10	B	-	-		0.6	
11	C	-	-			0.6	12	C	-	-			0.6
13	A	15A/3P	4755-AHU0012	0.6			14	A	15A/3P	4755-AHU0013	0.6		
15	B	-	-		0.6		16	B	-	-		0.6	
17	C	-	-			0.6	18	C	-	-			0.6
19	A	20A/3P	4755-AHU0018	3			20	A	15A/3P	SPARE			
21	B	-	-		3		22	B	-	-			
23	C	-	-			3	24	C	-	-			
25	A	20A/3P	SPARE				26	A	-	SPACE			
27	B	-	-				28	B	-	SPACE			
29	C	-	-				30	C	-	SPACE			
31	A	-	SPACE				32	A	-	SPACE			
33	B	-	SPACE				34	B	-	SPACE			
35	C	-	SPACE				36	C	-	SPACE			
37	A	-	SPACE				38	A	30A/3P	TVSS			
39	B	-	SPACE				40	B	-	-			
41	C	-	SPACE				42	C	-	-			
SUB TOTAL				4.8	4.8	4.8	SUB TOTAL				1.8	1.8	1.8

CONNECTED LOAD				ISOLATED GROUND BUS	☐
		AMPS			
A ∅ :	6.6	KVA	: 23.8	NEUTRAL BUS	✓
B ∅ :	6.6	KVA	: 23.8	GROUND BUS	✓
C ∅ :	6.6	KVA	: 23.8	SUB FEED BUS	☐

ALL BUS SHALL BE 1000 APSI COPPER

ELECTRICAL PANEL SCHEDULE

PANEL	4755-PNL0059	VOLTAGE	277/480
LOCATION	RM 100 (HIGH BAY AREA)	PHASE	3
MOUNTING	SURFACE	WIRE	4
MFR./TYPE	SQUARE D	AMPS	200
MAIN BKR	150A	AIC RATING	18K
MAIN FEEDER SIZE	4#1/0 & 1#6(G) - 2"C	FED FROM	SUBSTATION #3

CK1	PH	& AMPS	LOAD DESCRIPTION	KVA LOAD a∅	b∅	c∅	CK1	PH	& AMPS	LOAD DESCRIPTION	KVA LOAD a∅	b∅	c∅
1	A	15A/3P	4755-AHU0021	0.6			2	A	15A/3P	4755-AHU0022	0.6		
3	B	-	-		0.6		4	B	-	-		0.6	
5	C	-	-			0.6	6	C	-	-			0.6
7	A	15A/3P	4755-AHU0023	0.6			8	A	50A/3P	4755-XFMR0002*	10.5		
9	B	-	-		0.6		10	B	-	-		10.5	
11	C	-	-			0.6	12	C	-	-			10.5
13	A	15A/3P	4755-AHU0024	0.6			14	A	50A/3P	4755-XFMR0001	10.5		
15	B	-	-		0.6		16	B	-	-		10.5	
17	C	-	-			0.6	18	C	-	-			10.5
19	A	15A/3P	SPARE				20	A	15A/3P	SPARE			
21	B	-	-				22	B	-	-			
23	C	-					24	C	-				
25	A	-	SPACE				26	A	-	SPACE			
27	B	-	SPACE				28	B	-	SPACE			
29	C	-	SPACE				30	C	-	SPACE			
31	A	-	SPACE				32	A	-	SPACE			
33	B	-	SPACE				34	B	-	SPACE			
35	C	-	SPACE				36	C	-	SPACE			
37	A	-	SPACE				38	A	30A/3P	TVSS			
39	B	-	SPACE				40	B	-	-			
41	C	-	SPACE				42	C	-	-			
SUB TOTAL				1.8	1.8	1.8	SUB TOTAL				21.6	21.6	21.6

*INTERCEPT AND EXTEND EXSTING CIRCUIT TO NEW PANEL LOCATION.

CONNECTED LOAD				ISOLATED GROUND BUS	☐
		AMPS			
A ∅ :	23.4	KVA	: 84.5	NEUTRAL BUS	✓
B ∅ :	23.4	KVA	: 84.5	GROUND BUS	✓
C ∅ :	23.4	KVA	: 84.5	SUB FEED BUS	☐

ALL BUS SHALL BE 1000 APSI COPPER

ELECTRICAL PANEL SCHEDULE

PANEL	4755-PNL0060	VOLTAGE	277/480
LOCATION	RM 100 (HIGH BAY AREA)	PHASE	3
MOUNTING	SURFACE	WIRE	4
MFR./TYPE	SQUARE D	AMPS	100
MAIN BKR	100A	AIC RATING	18K
MAIN FEEDER SIZE	4#2 & 1#8(G) - 1-1/4"C	FED FROM	SUBSTATION #3

CK1	PH	FRAME & AMPS	LOAD DESCRIPTION	KVA LOAD a∅	b∅	c∅	CK1	PH	FRAME & AMPS	LOAD DESCRIPTION	KVA LOAD a∅	b∅	c∅
1	A	15A/3P	4755-AHU0016	0.9			2	A	15A/3P	4755-AHU0017	1.3		
3	B	-	-		0.9		4	B	-	-		1.3	
5	C	-	-			0.9	6	C	-	-			1.3
7	A	15A/3P	4755-AHU0014	0.8			8	A	15A/3P	4755-AHU0015	0.6		
9	B	-	-		0.8		10	B	-	-		0.6	
11	C	-	-			0.8	12	C	-	-			0.6
13	A	15A/3P	4755-SAF0001	0.9			14	A	15A/3P	4755-RAF0001	1.3		
15	B	-	-		0.9		16	B	-	-		1.3	
17	C	-	-			0.9	18	C	-	-			1.3
19	A	15A/3P	SPARE				20	A	15A/3P	SPARE	-		
21	B	-	-				22	B	-	-		-	
23	C	-					24	C					-
25	A	20A/3P	SPARE				26	A	20A/3P	4755-VAV0005	2		
27	B	-	-				28	B	-	-		2	
29	C	-	-				30	C	-	-			2
31	A	15A/3P	SPARE				32	A	-	SPACE			
33	B	-	-				34	B	-	SPACE			
35	C	-	-				36	C	-	SPACE			
37	A	-	SPACE				38	A	30A/3P	TVSS			
39	B	-	SPACE				40	B	-	-			
41	C	-	SPACE				42	C	-	-			
SUB TOTAL				2.6	2.6	2.6	SUB TOTAL				5.2	5.2	5.2

CONNECTED LOAD				ISOLATED GROUND BUS	☐
		AMPS			
A ∅ :	7.8	KVA	: 28.2	NEUTRAL BUS	✓
B ∅ :	7.8	KVA	: 28.2	GROUND BUS	✓
C ∅ :	7.8	KVA	: 28.2	SUB FEED BUS	☐

ALL BUS SHALL BE 1000 APSI COPPER

ELECTRICAL PANEL SCHEDULE

PANEL	4755-PNL0065	VOLTAGE	277/480
LOCATION	EQUIP. ROOM 400B	PHASE	3
MOUNTING	SURFACE	WIRE	4
MFR./TYPE	SQUARE D	AMPS	200
MAIN BKR	150 A	AIC RATING	18K
MAIN FEEDER SIZE	4#1/0 & 1#6 (G)	FED FROM	SUBSTATION #2

CK1	PH	FRAME & AMPS	LOAD DESCRIPTION	KVA LOAD a∅	b∅	c∅	CK1	PH	FRAME & AMPS	LOAD DESCRIPTION	KVA LOAD a∅	b∅	c∅
1	A	25A/3P	4755-AHU0044	3.9			2	A	25A/3P	4755-AHU0045	3.9		
3	B	-	-		3.9		4	B	-	-		3.9	
5	C	-	-			3.9	6	C	-	-			3.9
7	A	25A/3P	4755-AHU0040	3.9			8	A	15A/3P	4755-EAF0002	0.8		
9	B	-	-		3.9		10	B	-	-		0.8	
11	C	-	-			3.9	12	C	-	-			0.8
13	A	20A/1P	LIGHTS	0.8			14	A	20A/3P	SPARE	-		
15	B	20A/3P	4755-VAV0063		2.3		16	B	-	-		-	
17	C	-	-			2.3	18	C	-	-			-
19	A	-	-	2.3			20	A	20A/1P	SPARE			
21	B	30A/3P	4755-VAV0048		5.8		22	B	-	-			
23	C	-	-			5.8	24	C	-	-			
25	A	-		5.8			26	A	20A/1P	SPARE			
27	B	20A/3P	4755-EWH0001		4		28	B	-	-			
29	C	-	-			4	30	C	-	-			
31	A	-	-	4			32	A	-	SPACE			
33	B	-	SPACE				34	B	-	SPACE			
35	C	-	SPACE				36	C	-	SPACE			
37	A	-	SPACE				38	A	30A/3P	TVSS			
39	B	-	SPACE				40	B	-	-			
41	C	-	SPACE				42	C	-	-			
B TOTAL				20.7	19.9	19.9	B TOTAL				4.7	4.7	4.7

CONNECTED LOAD				ISOLATED GROUND BUS	☐
		AMPS			
A ∅ :	25.4	KVA	: 91.7	NEUTRAL BUS	✓
B ∅ :	24.6	KVA	: 88.8	GROUND BUS	✓
C ∅ :	24.6	KVA	: 88.8	SUB FEED BUS	☐

ALL BUS SHALL BE 1000 APSI COPPER

ELECTRICAL PANEL SCHEDULE

PANEL	4755-PNL0066	VOLTAGE	277/480
LOCATION	MECH. EQUIP. ROOM 119	PHASE	3
MOUNTING	SURFACE	WIRE	4
MFR./TYPE	SQUARE D	AMPS	200
MAIN BKR	200 A	AIC RATING	18K
MAIN FEEDER SIZE	4#3/0 & 1#6 (G)	FED FROM	SUBSTATION #2

CK1	PH	FRAME & AMPS	LOAD DESCRIPTION	KVA LOAD a∅	b∅	c∅	CK1	PH	FRAME & AMPS	LOAD DESCRIPTION	KVA LOAD a∅	b∅	c∅
1	A	60A/3P	4755-CHWP0001	7.4			2	A	20A/3P	4755-HWP0001	3		
3	B	-	-		7.4		4	B	-	-		3	
5	C	-	-			7.4	6	C	-	-			3
7	A	60A/3P	4755-CHWP0002	7.4			8	A	20A/3P	4755-HWP0002	3		
9	B	-	-		7.4		10	B	-	-		3	
11	C					7.4	12	C					3
13	A	60A/3P	4755-CHWP0003	7.4			14	A	20A/3P	4755-HWP0003	3		
15	B	-	-		7.4		16	B	-	-		3	
17	C	-	-			7.4	18	C	-	-			3
19	A	40A/3P	SPARE	-			20	A	20A/3P	SPARE			
21	B	-	-		-		22	B	-	-			
23	C	-	-			-	24	C	-	-			
25	A	20A/3P	SPARE				26	A	20A/3P	SPARE			
27	B	-	-				28	B	-	-			
29	C	-	-				30	C	-	-			
31	A	20A/1P	SPARE				32	A	20A/1P	SPARE			
33	B	20A/1P	SPARE				34	B	20A/1P	SPARE			
35	C	20A/1P	SPARE				36	C	20A/1P	SPARE			
37	A	20A/1P	SPARE				38	A	30A/3P	TVSS			
39	B	20A/1P	SPARE				40	B	-	-			
41	C	20A/1P	SPARE				42	C	-	-			
SUB TOTAL				22.2	22.2	22.2	SUB TOTAL				9	9	9

CONNECTED LOAD				ISOLATED GROUND BUS	☐
		AMPS			
A ∅ :	31.2	KVA	: 112.6	NEUTRAL BUS	✓
B ∅ :	31.2	KVA	: 112.6	GROUND BUS	✓
C ∅ :	31.2	KVA	: 112.6	SUB FEED BUS	☐

ALL BUS SHALL BE 1000 APSI COPPER

ELECTRICAL PANEL SCHEDULE

PANEL	4755-PNL0067	VOLTAGE	277/480
LOCATION	RM 117 (HIGH BAY AREA)	PHASE	3
MOUNTING	SURFACE	WIRE	4
MFR./TYPE	SQUARE D	AMPS	100
MAIN BKR	100A	AIC RATING	18K
MAIN FEEDER SIZE	4#2 & 1#8(G) - 1-1/4"C	FED FROM	SUBSTATION #2

CK1	PH	FRAME & AMPS	LOAD DESCRIPTION	KVA LOAD a∅	b∅	c∅	CK1	PH	FRAME & AMPS	LOAD DESCRIPTION	KVA LOAD a∅	b∅	c∅
1	A	15A/3P	4755-AHU0001	0.6			2	A	15A/3P	4755-AHU0002	0.6		
3	B	-	-		0.6		4	B	-	-		0.6	
5	C	-	-			0.6	6	C	-	-			0.6
7	A	15A/3P	4755-AHU0003	0.6			8	A	15A/3P	4755-AHU0004	0.6		
9	B	-	-		0.6		10	B	-	-		0.6	
11	C	-	-			0.6	12	C	-	-			0.6
13	A	15A/3P	4755-AHU0005	0.6			14	A	15A/3P	4755-AHU0006	0.6		
15	B	-	-		0.6		16	B	-	-		0.6	
17	C	-	-			0.6	18	C	-	-			0.6
19	A	15A/3P	4755-AHU0007	0.6			20	A	20A/3P	4755-BLR0001	0.6		
21	B	-	-		0.6		22	B	-	-		0.6	
23	C	-	-			0.6	24	C	-	-			0.6
25	A	20A/3P	4755-BLR0003	0.6			26	A	20A/3P	4755-BLR0002	0.6		
27	B	-	-		0.6		28	B	-	-		0.6	
29	C	-	-			0.6	30	C	-	-			0.6
31	A	-	SPACE				32	A	-	SPACE			
33	B	-	SPACE				34	B	-	SPACE			
35	C	-	SPACE				36	C	-	SPACE			
37	A	-	SPACE				38	A	30A/3P	TVSS			
39	B	-	SPACE				40	B	-	-			
41	C	-	SPACE				42	C	-	-			
SUB TOTAL				3	3	3	SUB TOTAL				3	3	3

*INTERCEPT AND EXTEND EXSTING CIRCUIT TO NEW PANEL LOCATION.

CONNECTED LOAD				ISOLATED GROUND BUS	☐
		AMPS			
A ∅ :	6	KVA	: 21.7	NEUTRAL BUS	✓
B ∅ :	6	KVA	: 21.7	GROUND BUS	✓
C ∅ :	6	KVA	: 21.7	SUB FEED BUS	☐

ALL BUS SHALL BE 1000 APSI COPPER

MAXIMO #4755-PNL0051	MAXIMO #4755-PNL0059	MAXIMO #4755-PNL0060
MAXIMO #4755-PNL0065	MAXIMO #4755-PNL0066	MAXIMO #4755-PNL0067
MAXIMO #4755-RP0001	LUMINAIRE SCHEDULE BASE BID AND ADD ALT #4	
	TRANSFORMER SCHEDULE	

SCHEDULE PLAN

NOT TO SCALE

ELECTRICAL PANEL SCHEDULE

PANEL	4755-RP0001	VOLTAGE	120/208
LOCATION	ELECTRICAL EQUIP. 101	PHASE	3
MOUNTING	SURFACE	WIRE	4
MFR./TYPE	SQUARE D	AMPS	225
MAIN BKR	225A	AIC RATING	22K
MAIN FEEDER SIZE	4#4/0 & 1#4(G) IN 2-1/2"C	FED FROM	SUBSTATION #2 VIA 4755-XFMR0003

CK1	PH	FRAME & AMPS	LOAD DESCRIPTION	KVA LOAD a∅	b∅	c∅	CK1	PH	FRAME & AMPS	LOAD DESCRIPTION	KVA LOAD a∅	b∅	c∅
1	A	20A/1P	1ST FLOOR VAV	1.1			2	A	20A/1P	4755-UH0002	0.2		
3	B	20A/1P	4755-EAF0003		-		4	B	20A/1P	SPARE		-	
5	C	20A/1P	4755-ACF0002 & 4755-AHU0031			1.2	6	C	20A/1P	4755-ACF0003 & 4755-AHU0030			1.2
7	A	20A/1P	4755-ACF0001 & 4755-AHU0019	1.2			8	A	20A/1P	SPARE	-		
9	B	20A/1P	2ND FLOOR VAV		1		10	B	15A/1P	4755-AHU0025		0.7	
11	C	20A/1P	4755-VAV0063			0.3	12	C	20A/1P	2ND FLOOR VAV			1
13	A	20A/1P	4755-UCS0004	1.5			14	A	20A/1P	3RD FLOOR VAV	1		
15	B	20A/1P	SPARE		-		16	B	20A/1P	4755-UH0001		0.2	
17	C	20A/1P	3RD FLOOR VAV			1	18	C	20A/1P	SPARE			-
19	A	20A/1P	SPARE	-			20	A	20A/1P	RECEPTACLE	0.2		
21	B	20A/1P	4TH FLOOR VAV		1		22	B	25A/2P	4755-DXCU0001		1.9	
23	C	30A/2P	KEWH-1			2.1	24	C					1.9
25	A	-	-	2.1			26	A	25A/1P	4755-EAF0001	1.7		
27	B	20A/1P	METERS (ADD ALT #1)		0.4		28	B	20A/1P	SPARE			
29	C	-	SPACE				30	C	20A/1P	SPARE			
31	A	-	SPACE				32	A	20A/1P	SPARE			
33	B	-	SPACE				34	B		SPACE			
35	C	-	SPACE				36	C	-	SPACE			
37	A	-	SPACE				38	A	30A/3P	TVSS			
39	B	-	SPACE				40	B	-	-			
41	C	-	SPACE				42	C	-	-			
SUB TOTAL				5.9	2.4	4.6	SUB TOTAL				3.08	2.8	4.1

CONNECTED LOAD				ISOLATED GROUND BUS	☐
		AMPS			
A ∅ :	8.98	KVA	: 74.8	NEUTRAL BUS	✓
B ∅ :	5.2	KVA	: 43.3	GROUND BUS	✓
C ∅ :	8.7	KVA	: 72.5	SUB FEED BUS	☐

ALL BUS SHALL BE 1000 APSI COPPER

BASE BID AND ADD ALT #4 LUMINAIRE SCHEDULE (FIXTURES ARE BASIS OF DESIGN)

FIXTURE MARK	LAMPS NO	WATTS	TYPE	VOLTAGE	MAKE	MOUNTING TYPE	MODEL	DESCRIPTION
A BASE BID	2	32	T8	277	LITHONIA	SURFACE	LB 232 MVOLT GEB10IS	SURFACE MOUNTED WRAP WITH ACRYLIC LENS.
AE BASE BID	2	32	T8	277	LITHONIA	SURFACE	LB 232 MVOLT GEB10IS EL	SAME AS FIXTURE "A" EXCEPT WITH 1400 LUMEN EMERGENCY BATTERY PACK.
B ADD ALT #4	1	32	TRT	277	LITHONIA	RECESSED	AF 1/32TRT 6AR 277 DMHL	6" CAN DIMMABLE FLOURESCENT CAN LIGHT
C ADD ALT #4	4	32	T8	277	LITHONIA	RECESSED	2GT8 4 32 A12125 MVOLT GEB10IS	2X4 RECESS FIXTURE

NOTES:
1. ALL FIXTURES TO HAVE LAMP INCLUDED.

THREE PHASE, 480V DELTA PRIMARY - 208Y/120V WYE SECONDARY

Transformer KVA	Primary F.L. Amps	Primary Breaker or Fuse	Primary Feeder	Secondary F.L. Amps	Secondary Breaker or Fuse	Secondary Feeder	Maximo Number
75	90.25	150A	3 # 1/0 & 1 # 6(G)	208.33	225A	4 # 4/0 & 1 # 4(G)	4755-XFMR0003

ALL WORK SHOWN ON THIS SHEET IS BASE BID, EXCEPT FOR NOTED BREAKERS FOR ADD ALT #1 & #2 AND FIXTURE SCHEDULE FOR ADD ALT #4.

WARNING
DO NOT SCALE THIS DRAWING
THIS DRAWING WAS DESIGNED TO BE PRINTED AT A NASA SHEET SIZE: MSFC STD. SIZE 40" X 28"

REV	BY	DATE	REVISION	C.I. NO.	APPROVED

Marshall Space Flight Center
Huntsville, Alabama 35812

REVITALIZE BUILDING
MECHANICAL SYSTEMS (4755)

SCHEDULES

FINAL SUBMITTAL
FOR CONSTRUCTION

SIGNATURES ON INDEX SHEET INDICATE ACCEPTANCE OF THIS SHEET

REF. NO. E301 12 OF 17

AE FIRM: GOODWYN MILLS CAWOOD / MERRICK & COMPANY — JOINT VENTURE

NASA AE CONTRACT NO. NNM12AA49C NNM12AA68T

SUBMITTED: JENNIFER LANDRY
APPROVAL RECOMMENDED: ANDY ROWLAND, AS22 PROJECT A/E
APPROVED: JIMMY GUARIN
AE: DATE: 11/04/13
APPROVAL RECOMMENDED: ANDY ROWLAND, AS22 SUPPORT A/E
AS22 GROUP LEAD DATE: 11/04/13
DESIGNED S. CRITTENDEN
DRAWN M. PATE
CHECKED J. AVERRETT
APPROVAL RECOMMENDED: NELSON OLINGER, AS22 TEAM LEAD
SCALE: NO SCALE
SPEC. NO. M5057

DRAWING NO. FAC-DA-4755-E301
SHEET __ OF __

PLAN NOTES

1 EQUIPMENT TO BE REMOVED.

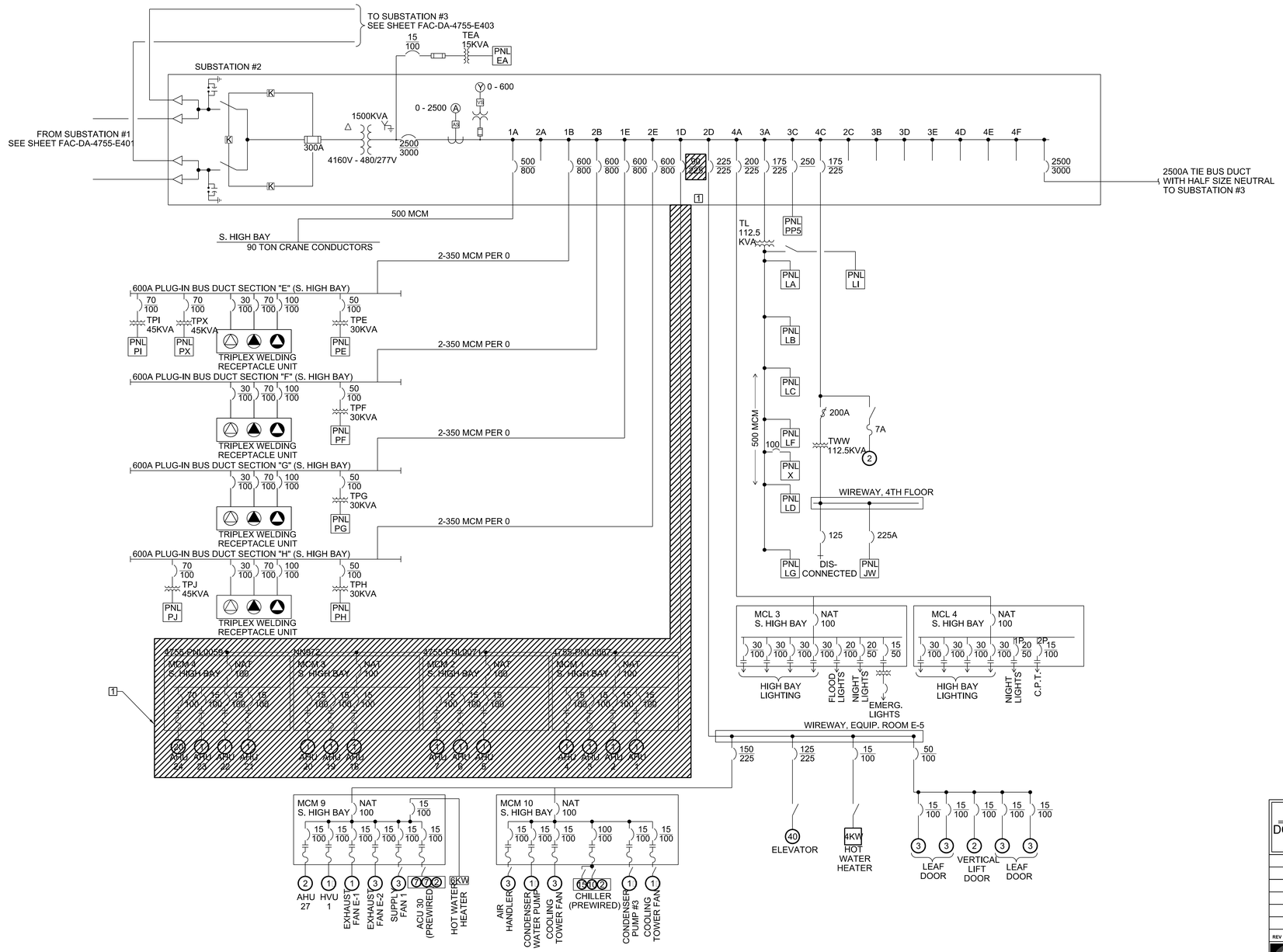

1 E401 DEMO ONE LINE DIAGRAM - SUBSTATION #2

NO SCALE

ALL WORK SHOWN ON THIS SHEET IS BASE BID.

WARNING

DO NOT SCALE THIS DRAWING

THIS DRAWING WAS DESIGNED TO BE PRINTED AT A NASA SHEET SIZE: MSFC STD. SIZE 40" X 28"

REV	BY	DATE	REVISION	C.I. NO.	APPROVED

Marshall Space Flight Center
Huntsville, Alabama 35812

REVITALIZE BUILDING
MECHANICAL SYSTEMS (4755)

DEMO ONE LINE DIAGRAM - SUBSTATION #2

FINAL SUBMITTAL
FOR CONSTRUCTION

SIGNATURES ON INDEX SHEET INDICATE ACCEPTANCE OF THIS SHEET

REF. NO. E401 13 OF 17

AE FIRM: GOODWYN | MILLS | CAWOOD — MERRICK & COMPANY — JOINT VENTURE

NASA AE CONTRACT NO. NNM12AA49C NNM12AA68T

SUBMITTED: JENNIFER LANDRY
APPROVAL RECOMMENDED: ANDY ROWLAND, AS/2 PROJECT A/E
APPROVED: JIMMY GUARIN
AE: DATE: 11/04/13
APPROVAL RECOMMENDED: ANDY ROWLAND, AS/2 SUPPORT A/E
AS/2 GROUP LEAD DATE: 11/04/13
DESIGNED S. CRITTENDEN
DRAWN M. PATE
CHECKED J. AVERRETT
APPROVAL RECOMMENDED: NELSON OLINGER, AS/2 TEAM LEAD
SCALE: AS SHOWN
SPEC. NO. M5057

DRAWING NO. FAC-DA-4755-E401

SHEET __ OF __

MSFC Master Bid Disk 03-26-2014

GENERAL NOTES

1. SOLID DENOTES NEW WORK.
2. SHADED LINE DENOTES EXISTING TO REMAIN.

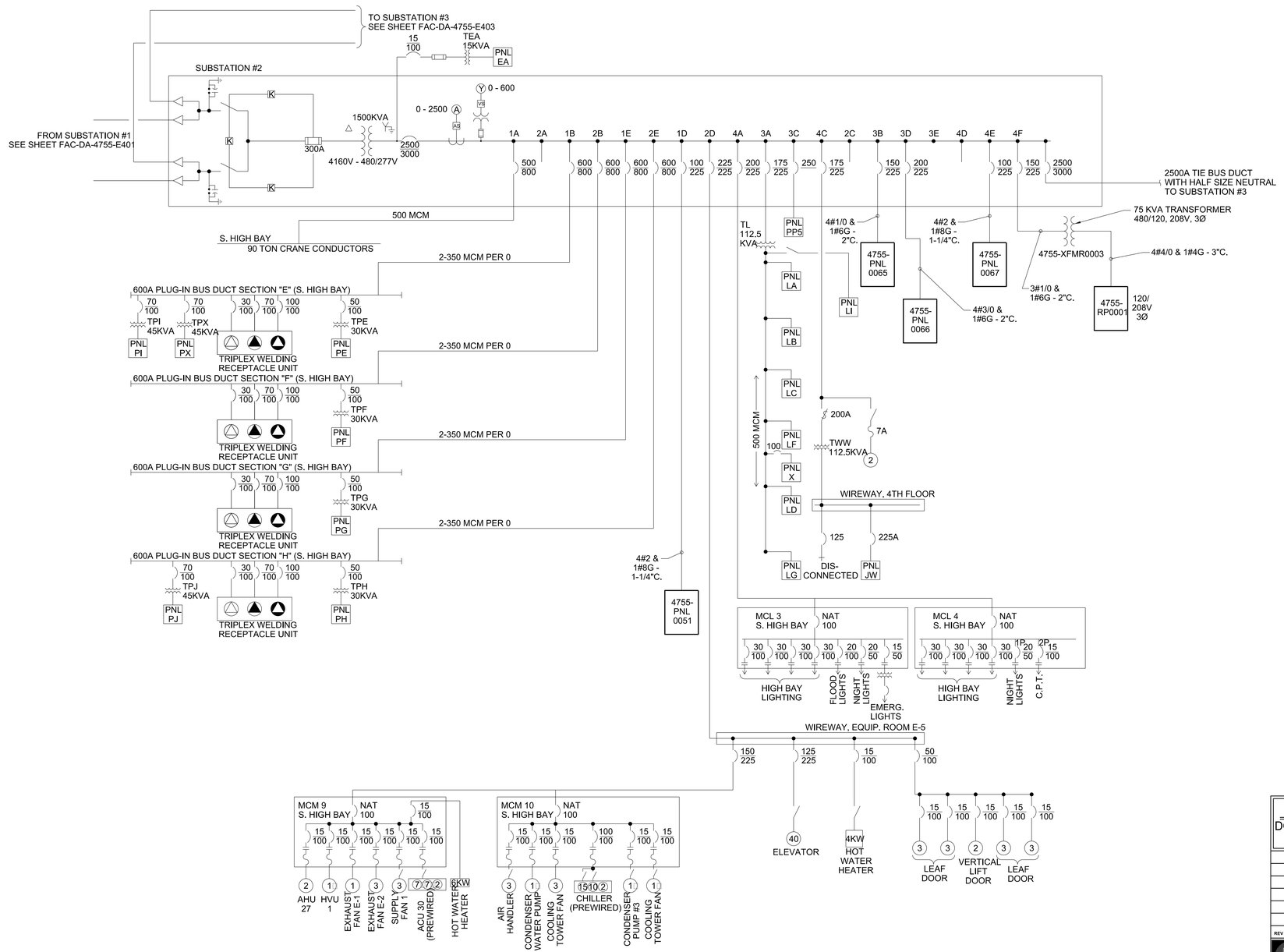

1 / E402 ONE LINE DIAGRAM - SUBSTATION #2 NEW WORK

NO SCALE

ALL WORK SHOWN ON THIS SHEET IS BASE BID.

WARNING

DO NOT SCALE THIS DRAWING

THIS DRAWING WAS DESIGNED TO BE PRINTED AT A NASA SHEET SIZE: MSFC STD. SIZE 40" X 28"

REV	BY	DATE	REVISION	C.I. NO.	APPROVED

Marshall Space Flight Center
Huntsville, Alabama 35812

REVITALIZE BUILDING
MECHANICAL SYSTEMS (4755)

ONE LINE DIAGRAM - SUBSTATION #2 NEW WORK

FINAL SUBMITTAL
FOR CONSTRUCTION

SIGNATURES ON INDEX SHEET INDICATE ACCEPTANCE OF THIS SHEET

REF. NO. E402 14 OF 17

AE FIRM: GOODWYN MILLS CAWOOD / MERRICK & COMPANY — JOINT VENTURE

NASA AE CONTRACT NO. NNM12AA49C NNM12AA68T

SUBMITTED: JENNIFER LANDRY
APPROVAL RECOMMENDED: ANDY ROWLAND, AS22 PROJECT A/E
APPROVED: JIMMY GUARIN, AS22 GROUP LEAD, DATE: 11/04/13

AE: DATE: 11/04/13
DESIGNED: S. CRITTENDEN
DRAWN: M. PATE
CHECKED: J. AVERRETT
APPROVAL RECOMMENDED: ANDY ROWLAND, AS22 SUPPORT A/E
APPROVAL RECOMMENDED: NELSON OLINGER, AS22 TEAM LEAD

SCALE: AS SHOWN
SPEC. NO. M5057

DRAWING NO. FAC-DA-4755-E402
SHEET __ OF __

MSFC Master Bid Disk 03-26-2014

PLAN NOTES

1 EQUIPMENT TO BE REMOVED.

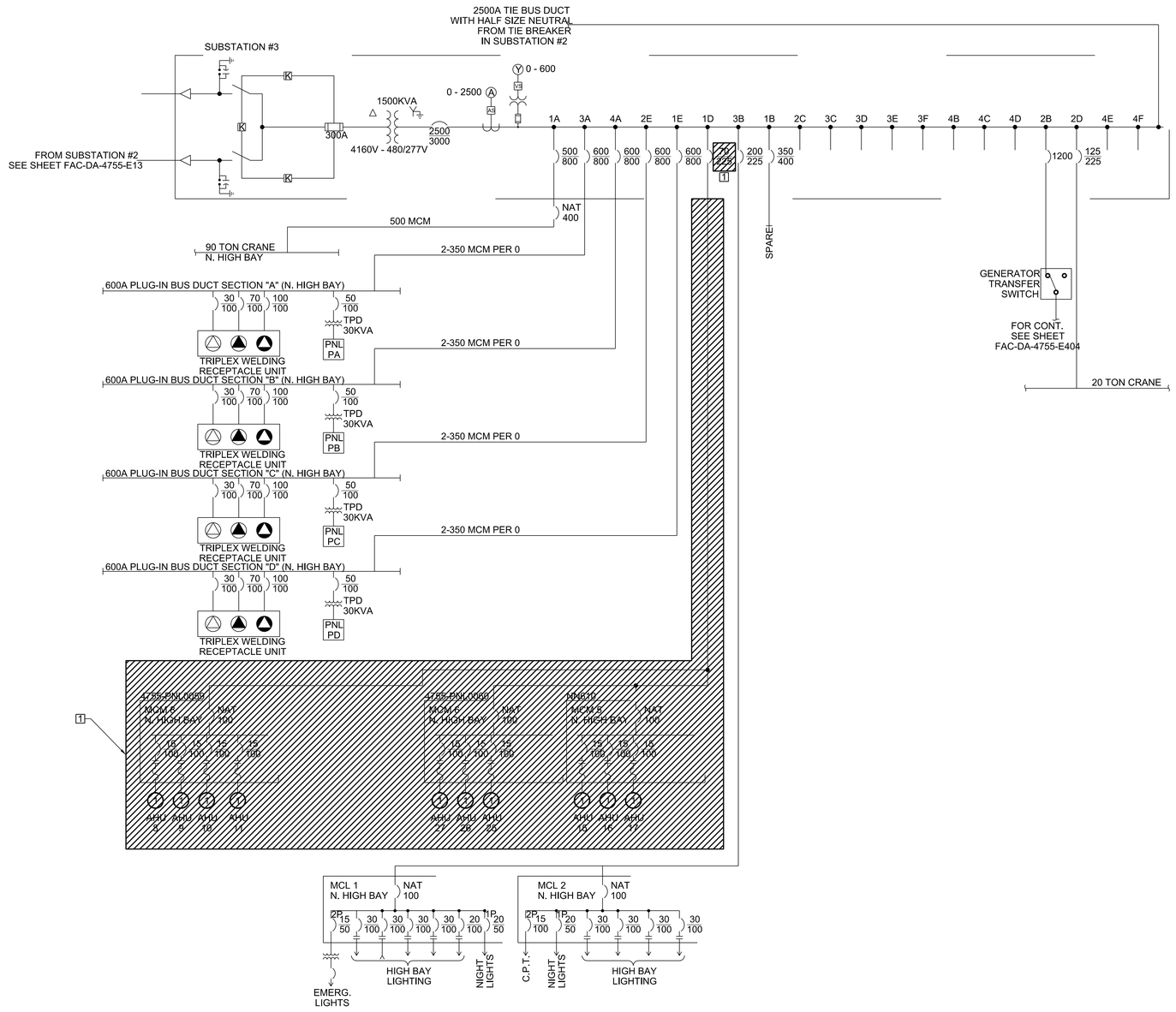

1 E403 DEMO ONE LINE DIAGRAM - SUBSTATION #3

NO SCALE

ALL WORK SHOWN ON THIS SHEET IS BASE BID.

WARNING

DO NOT SCALE THIS DRAWING

THIS DRAWING WAS DESIGNED TO BE PRINTED AT A NASA SHEET SIZE: MSFC STD. SIZE 40" X 28"

REV.	BY	DATE	REVISION	C.I. NO.	APPROVED

Marshall Space Flight Center
Huntsville, Alabama 35812

REVITALIZE BUILDING
MECHANICAL SYSTEMS (4755)

DEMO ONE LINE DIAGRAM - SUBSTATION #3

FINAL SUBMITTAL
FOR CONSTRUCTION

SIGNATURES ON INDEX SHEET INDICATE ACCEPTANCE OF THIS SHEET

REF. NO. E403 15 OF 17

AE FIRM: GOODWYN | MILLS | CAWOOD — MERRICK & COMPANY — JOINT VENTURE

NASA AE CONTRACT NO. NNM12AA49C NNM12AA68T

SUBMITTED: JENNIFER LANDRY
APPROVAL RECOMMENDED: ANDY ROWLAND, AS22 PROJECT A/E
APPROVED: JIMMY GUARIN
AE: DATE: 11/04/13
APPROVAL RECOMMENDED: ANDY ROWLAND, AS22 SUPPORT A/E
AS22 GROUP LEAD DATE: 11/04/13
DESIGNED S. CRITTENDEN
DRAWN M. PATE
CHECKED J. AVERRETT
APPROVAL RECOMMENDED: NELSON OLINGER, AS22 TEAM LEAD
SCALE: AS SHOWN
SPEC. NO. M5057

DRAWING NO. FAC-DA-4755-E403

SHEET __ OF __

GENERAL NOTES

1. SOLID DENOTES NEW WORK.
2. SHADED LINE DENOTES EXISTING TO REMAIN.

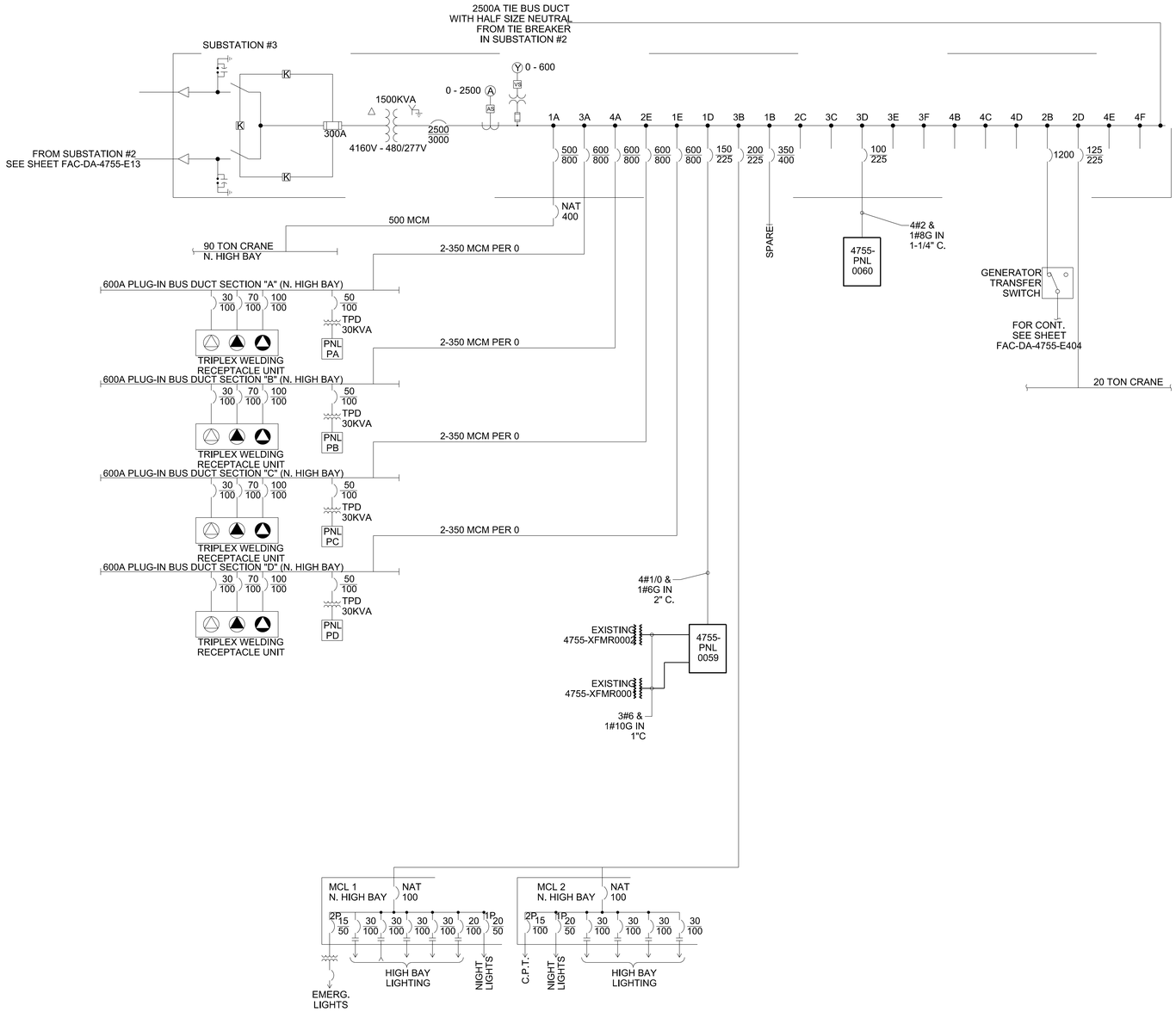

1 E404 ONE LINE DIAGRAM - SUBSTATION #3 NEW WORK

NO SCALE

ALL WORK SHOWN ON THIS SHEET IS BASE BID.

WARNING

DO NOT SCALE THIS DRAWING

THIS DRAWING WAS DESIGNED TO BE PRINTED AT A NASA SHEET SIZE: MSFC STD. SIZE 40" X 28"

REV	BY	DATE	REVISION	C.I. NO.	APPROVED

Marshall Space Flight Center
Huntsville, Alabama 35812

REVITALIZE BUILDING
MECHANICAL SYSTEMS (4755)

ONE LINE DIAGRAM - SUBSTATION #3 NEW WORK

FINAL SUBMITTAL

FOR CONSTRUCTION

SIGNATURES ON INDEX SHEET INDICATE ACCEPTANCE OF THIS SHEET

REF. NO. E404 16 OF 17

AE FIRM: GOODWYN MILLS CAWOOD / MERRICK & COMPANY JOINT VENTURE

NASA AE CONTRACT NO. NNM12AA49C NNM12AA68T

SUBMITTED: JENNIFER LANDRY

APPROVAL RECOMMENDED: ANDY ROWLAND, AS22 PROJECT A/E

APPROVED: JIMMY GUARIN

AE: DATE: 11/04/13

DESIGNED S. CRITTENDEN

DRAWN M. PATE

CHECKED J. AVERRETT

APPROVAL RECOMMENDED: ANDY ROWLAND, AS22 SUPPORT A/E

AS22 GROUP LEAD DATE: 11/04/13

APPROVAL RECOMMENDED: NELSON OLINGER, AS22 TEAM LEAD

SCALE: AS SHOWN

SPEC. NO. M5057

DRAWING NO. FAC-DA-4755-E404

SHEET __ OF __

MSFC Master Bid Disk 03-26-2014

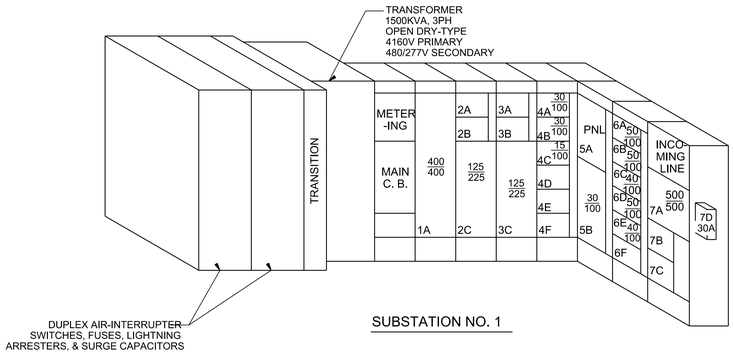

SUBSTATION NO. 1

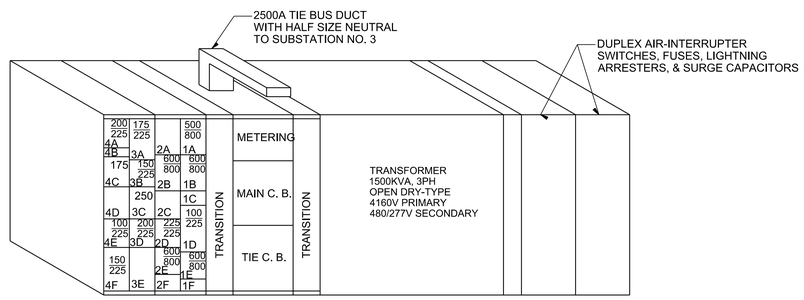

SUBSTATION NO. 2

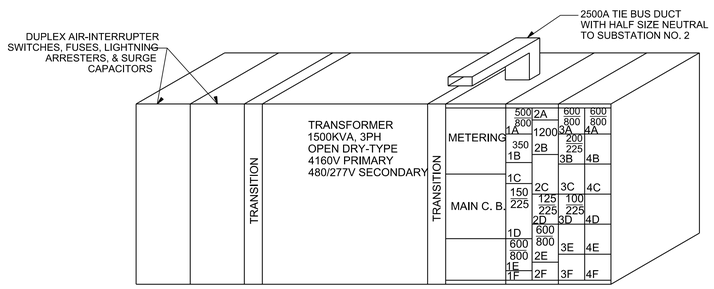

SUBSTATION NO. 3

1 E405 SUBSTATION ELEVATIONS

NO SCALE

SUBSTATION #1

1A	FEED FOR BUILDING 4754
2A	BLANK
2B	BLANK
2C	SPARE 125A
3A	BLANK
3B	EXHAUST FAN
3C	SPARE 125A
4A	HOT WATER PUMP #1
4B	HOT WATER PUMP #2
4C	CONTROL AIR COMPRESSOR
4D	BLANK
4E	BLANK
4F	BLANK
5A	PANELBOARD "LE"
5B	TRANSFORMER & CIR. BKR. FOR PANEL "LE"
6A	CHILLED WATER PUMP #2
6B	CHILLED WATER PUMP #1
6C	CONDENSER WATER PUMP #1
6D	COOLING TOWER FAN
6E	CONDENSER WATER PUMP #2
6F	CONTL. XFMR FOR COOLING TOWER FAN
7A	CHILLER
7B	BLANK
7C	BLANK
7D	AIR COMPRESSOR

SUBSTATION #2

1A	90 TON CRANE	
1B	SECTION E PLUG-IN BUS DUCT (S. HIGH BAY)	
1C	DO NOT USE	
1D	4755-PNL0051	1
1E	SECTION G PLUG-IN BUS DUCT (S. HIGH BAY)	
1F	DO NOT USE	
2A	BLANK	
2B	SECTION F PLUG-IN BUS DUCT (S. HIGH BAY)	
2C	BLANK	
2D	ELEVATOR, MCM 9 & 10, HOT WATER HEATER, DOORS	
2E	SECTION H PLUG-IN BUS DUCT (S. HIGH BAY)	
2F	DO NOT USE	
3A	TRANSFORMER T-4	
3B	4755-PNL0065	1
3C	PANEL PP-5 IN EQUIP. ROOM E-5	
3D	4755-PNL0066	1
3E	BLANK	
4A	MCL 3 & 4	
4B	DO NOT USE	
4C	4TH FLOOR TRANSFORMER	
4D	BLANK	
4E	4755-PNL0067	1
4F	4755-RP0001	1

SUBSTATION #3

1A	90 TON CRANE	
1B	SPARE 350A	
1C	DO NOT USE	
1D	4755-PNL0059	1
1E	SECTION D PLUG-IN BUS DUCT (N. HIGH BAY)	
1F	DO NOT USE	
2A	DO NOT USE	
2B	UTILITY FEED FOR TRANSFER SWITCH	
2C	BLANK	
2D	20 TON CRANE	
2E	SECTION C PLUG-IN BUS DUCT (N. HIGH BAY)	
2F	DO NOT USE	
3A	SECTION A PLUG-IN BUS DUCT (N. HIGH BAY)	
3B	MCL 1 & 2	
3C	BLANK	
3D	4755-PNL0060	1
3E	BLANK	
3F	BLANK	
4A	SECTION B PLUG-IN BUS DUCT (N. HIGH BAY)	
4B	BLANK	
4C	BLANK	
4D	BLANK	
4E	BLANK	
4F	BLANK	

PLAN NOTES

1 NEW PANEL FEED

GENERAL NOTES

1. SUBSTATION #1 SHOWN FOR COORDINATION PURPOSES ONLY. NO WORK TO BE DONE IN SUBSTATION #1 AT THIS TIME.

ALL WORK SHOWN ON THIS SHEET IS BASE BID.

WARNING

DO NOT SCALE THIS DRAWING

THIS DRAWING WAS DESIGNED TO BE PRINTED AT A NASA SHEET SIZE: MSFC STD, SIZE 40" X 28"

REV	BY	DATE	REVISION	C.I. NO.	APPROVED

Marshall Space Flight Center
Huntsville, Alabama 35812

REVITALIZE BUILDING
MECHANICAL SYSTEMS (4755)

SUBSTATION ELEVATIONS

FINAL SUBMITTAL
FOR CONSTRUCTION

SIGNATURES ON INDEX SHEET INDICATE ACCEPTANCE OF THIS SHEET

REF. NO. E405 17 OF 17

AE FIRM: GOODWYN | MILLS | CAWOOD — MERRICK & COMPANY — JOINT VENTURE

NASA AE CONTRACT NO. NNM12AA49C NNM12AA68T

SUBMITTED: JENNIFER LANDRY
APPROVAL RECOMMENDED: ANDY ROWLAND, AS22 PROJECT A/E
APPROVED: JIMMY GUARIN, AS22 GROUP LEAD, DATE: 11/04/13
AE: DATE: 11/04/13
DESIGNED: S. CRITTENDEN
DRAWN: M. PATE
CHECKED: J. AVERRETT
APPROVAL RECOMMENDED: ANDY ROWLAND, AS22 SUPPORT A/E
APPROVAL RECOMMENDED: NELSON OLINGER, AS22 TEAM LEAD
SCALE: AS SHOWN
SPEC. NO. M5057

DRAWING NO. FAC-DA-4755-E405

SHEET __ OF __

MSFC Master Bid Disk 03-26-2014

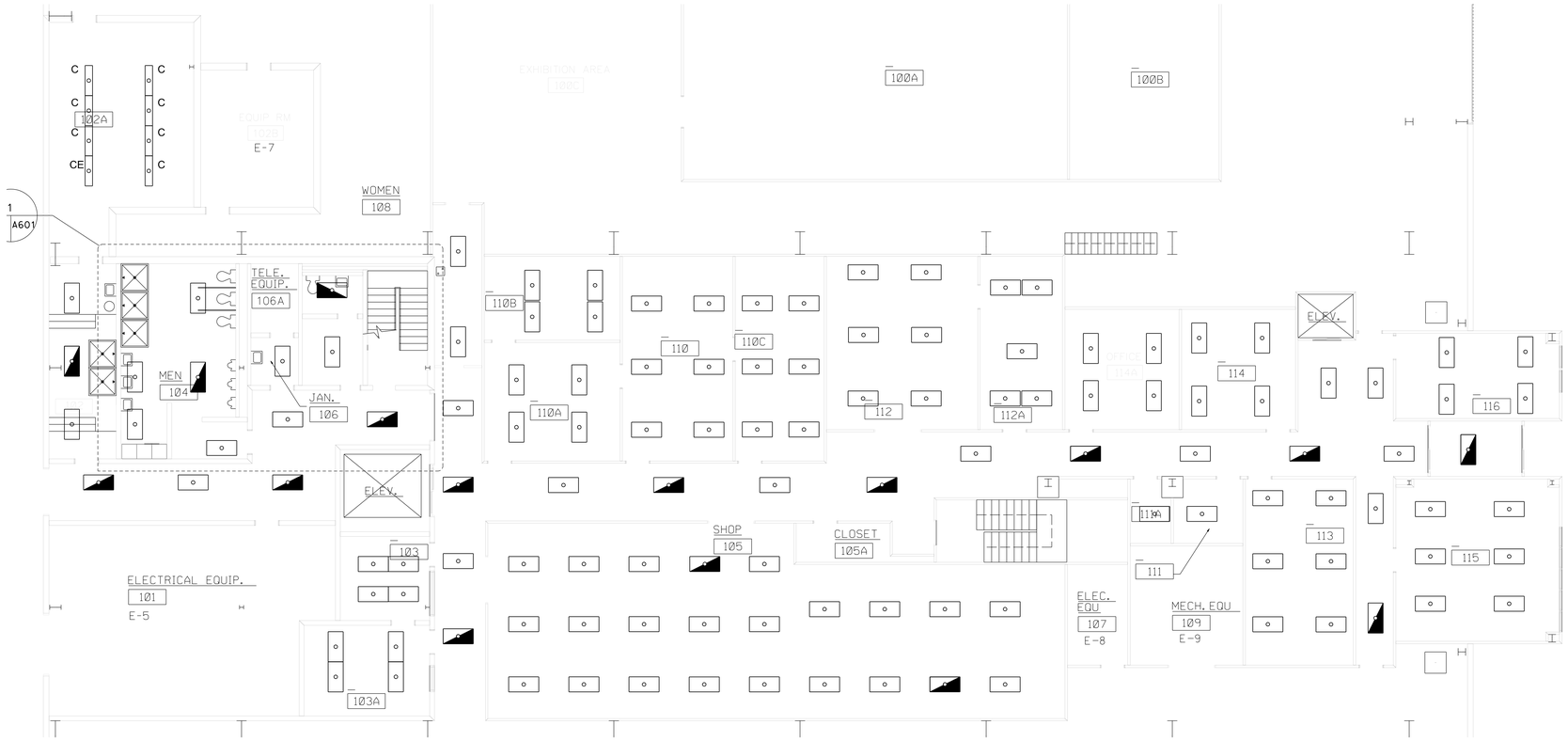

1 E206 LIGHTING PLAN - 1ST FLOOR AREA B ADD ALT #4
1/8"=1'-0"

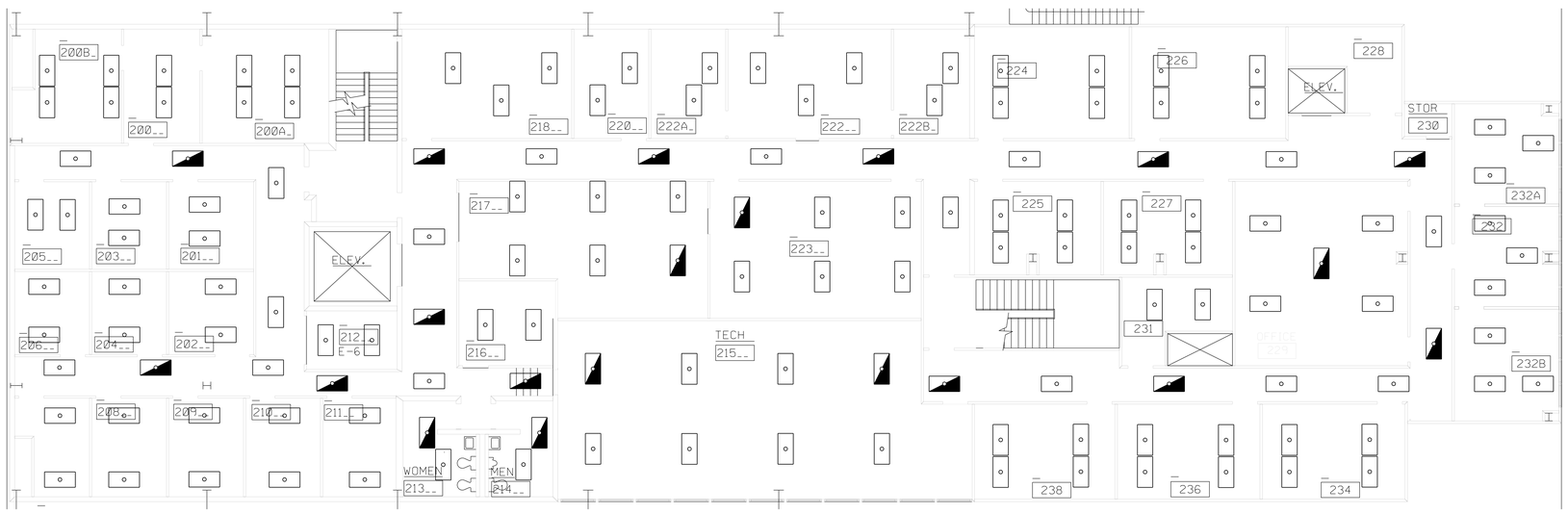

2 E206 LIGHTING PLAN - 2ND FLOOR AREA B ADD ALT #4
1/8"=1'-0"

ALL WORK SHOWN ON THIS SHEET IS ADD ALT #4

PLAN NOTES

1 NOT USED.

GENERAL NOTES ADD ALT #4

1. CONTRACTOR SHALL REMOVE LIGHTS SHOWN ON ARCHITECTURAL PLANS AND FURNISH AND INSTALL NEW LIGHTING AS SHOWN. SEE FIXTURE SCHEDULE ON THIS SHEET FOR BASIS OF DESIGN. CONTRACTOR SHALL REUTILIZE THE EXISTING CIRCUITS AND LIGHTING CONTROLS. COORDINATE INSTALLATION WITH MECHANICAL CONTRACTOR.
2. UNLESS OTHERWISE NOTED ALL FIXTURES SHALL BE TYPE "B" OR "BE" FIXTURES.

ADD ALT #4 LUMINAIRE SCHEDULE (FIXTURES ARE BASIS OF DESIGN)

FIXTURE MARK	LAMPS NO	LAMPS WATTS	LAMPS TYPE	VOLTAGE	MAKE	MOUNTING TYPE	MODEL	DESCRIPTION
B	2	28	T8	277	LITHONIA	GRID	2SP8 G 2 28 A12125 277 1/2 GEB10IS	GRID MOUNTED LENSED TROFFER WITH ACRYLIC LENS, TWO 28 WATT T8 LAMPS AND ELECTRONIC INSTANT START BALLAST
BE	2	28	T8	277	LITHONIA	GRID	2SP8 G 2 28 A12125 277 1/2 GEB10IS EL14	SAME AS FIXTURE "B" EXCEPT WITH 1400 LUMEN EMERGENCY BATTERY PACK.
C	2	28	T8	277	LITHONIA	RECESSED	SP8 F 2 28 A12125 277 1/2 GEB10IS	GYP BOARD RECESSED MOUNTED 1 X 4 TROFFER WITH ACRYLIC LENS, TWO 28 WATT T8 LAMPS AND ELECTRONIC INSTANT START BALLAST
CE	2	28	T8	277	LITHONIA	RECESSED	SP8 F 2 28 A12125 277 1/2 GEB10IS EL14	SAME AS FIXTURE "C" EXCEPT WITH 1400 LUMEN EMERGENCY BATTERY PACK.

NOTES:
1. ALL FIXTURES TO HAVE LAMP INCLUDED.

LEGEND ADD ALT #4

2X4 LIGHT FIXTURE

2X4 LIGHT FIXTURE WITH BATTERY BACK UP.

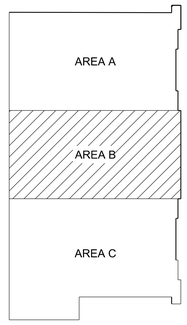

BUILDING 4755
KEY PLAN
NOT TO SCALE

WARNING
DO NOT SCALE THIS DRAWING
THIS DRAWING WAS DESIGNED TO BE PRINTED AT A NASA SHEET SIZE: MSFC STD. SIZE 49" X 28"

REV	BY	DATE	REVISION	C.I. NO.	APPROVED

Marshall Space Flight Center
Huntsville, Alabama 35812

REVITALIZE BUILDING
MECHANICAL SYSTEMS (4755)

LIGHTING PLAN - 1ST & 2ND FLOOR AREA B ADD ALT #4

FINAL SUBMITTAL
FOR CONSTRUCTION

SIGNATURES ON INDEX SHEET INDICATE ACCEPTANCE OF THIS SHEET

REF. NO. E406 OF 17

AE FIRM: GOODWYN | MILLS | CAWOOD — MERRICK & COMPANY — JOINT VENTURE

SUBMITTED: JENNIFER LANDRY
APPROVAL RECOMMENDED: ANDY ROWLAND, AS22 PROJECT A/E
AE: DATE: 11/04/13
APPROVAL RECOMMENDED: ANDY ROWLAND, AS22 SUPPORT A/E
DESIGNED S. CRITTENDEN
DRAWN M. PATE
CHECKED J. AVERRETT
APPROVAL RECOMMENDED: NELSON OLINGER, AS22 TEAM LEAD
SCALE: AS SHOWN
SPEC. NO. M5057

NASA AE CONTRACT NO. NNM12AA49C NNM12AA68T
APPROVED: JIMMY GUARIN
AS22 GROUP LEAD DATE: 11/04/13
DRAWING NO. FAC-DA-4755-E406
SHEET __ OF __

MSFC Master Bid Disk 03-26-2014

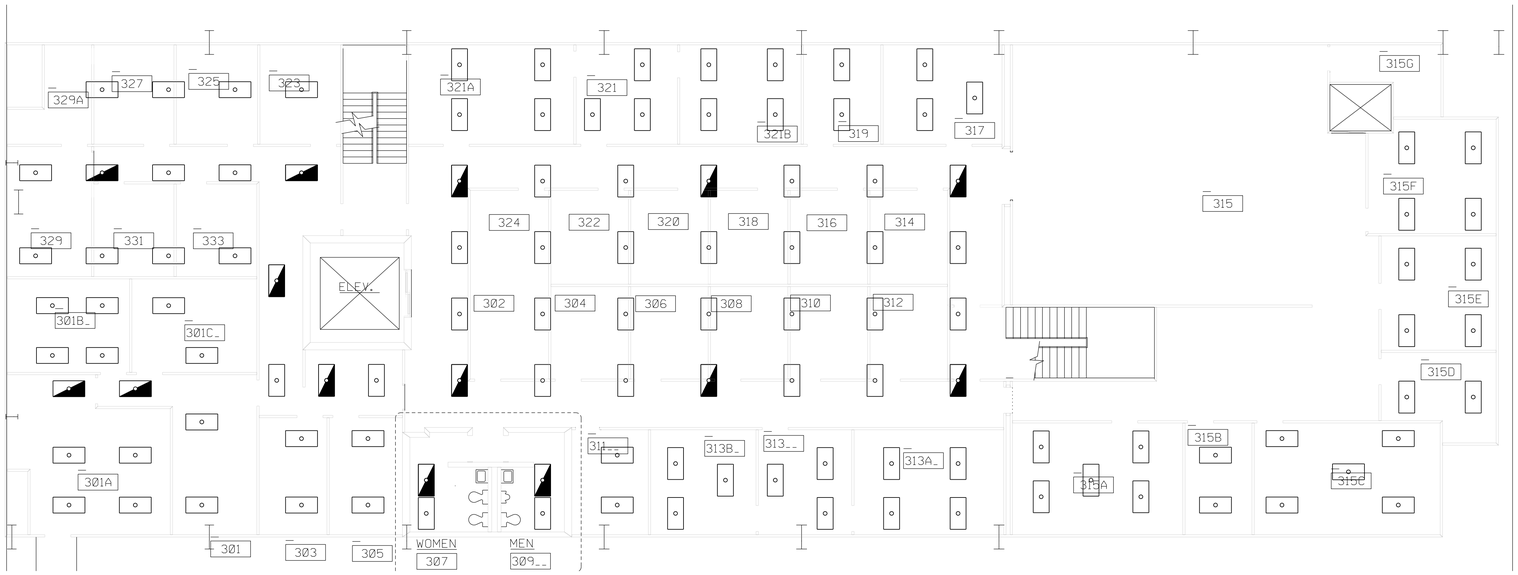

1 E407 LIGHTING PLAN - 3RD FLOOR AREA B ADD ALT #4
1/8"=1'-0"

PLAN NOTES

1 NOT USED.

GENERAL NOTES ADD ALT #4

1. CONTRACTOR SHALL REMOVE LIGHTS SHOWN ON ARCHITECTURAL PLANS AND FURNISH AND INSTALL NEW LIGHTING AS SHOWN. SEE FIXTURE SCHEDULE ON SHEET E406 FOR BASIS OF DESIGN. CONTRACTOR SHALL REUTILIZE THE EXISTING CIRCUITS AND LIGHTING CONTROLS. COORDINATE INSTALLATION WITH MECHANICAL CONTRACTOR.
2. UNLESS OTHERWISE NOTED ALL FIXTURES SHALL BE TYPE "B" OR "BE" FIXTURES.

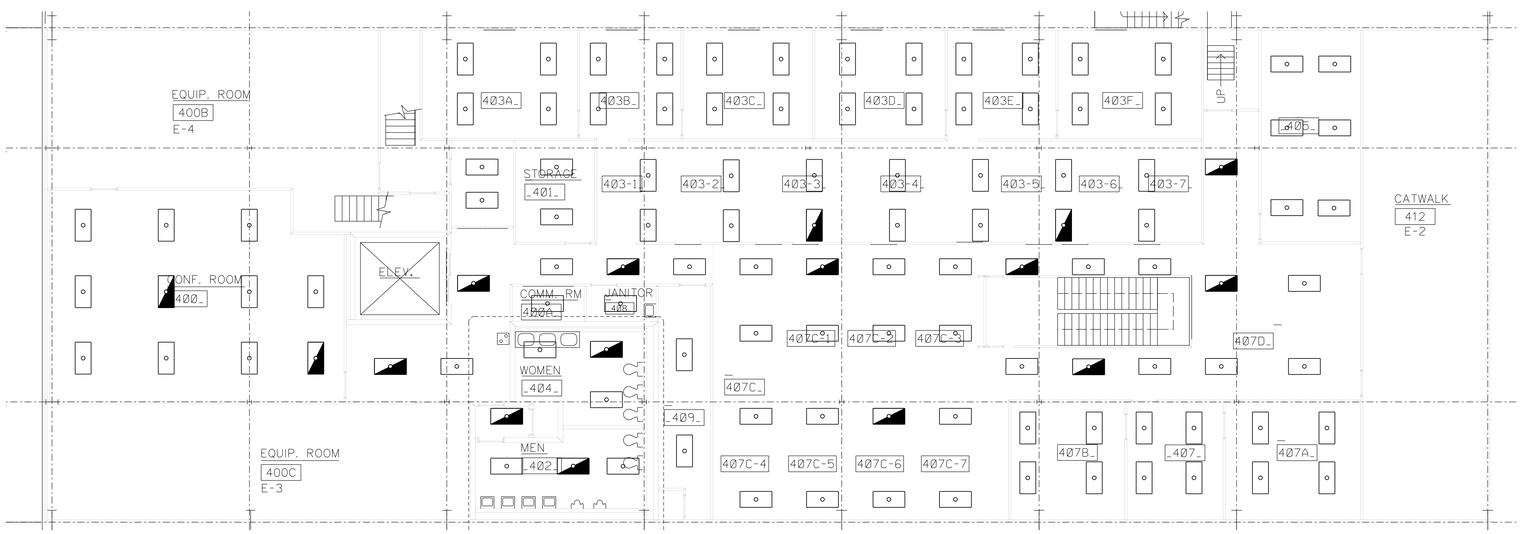

2 E407 LIGHTING PLAN - 4TH FLOOR AREA B ADD ALT #4
1/8"=1'-0"

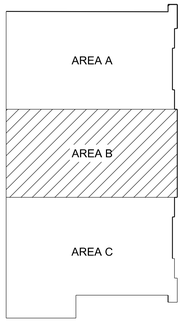

BUILDING 4755
KEY PLAN
NOT TO SCALE

WARNING
DO NOT SCALE THIS DRAWING
THIS DRAWING WAS DESIGNED TO BE PRINTED AT A NASA SHEET SIZE: MSFC STD. SIZE 40" X 28"

REV	BY	DATE	REVISION	C.I. NO.	APPROVED

Marshall Space Flight Center
Huntsville, Alabama 35812

REVITALIZE BUILDING
MECHANICAL SYSTEMS (4755)

LIGHTING PLAN - 3RD & 4TH FLOOR AREA B ADD ALT #4

FINAL SUBMITTAL
FOR CONSTRUCTION

SIGNATURES ON INDEX SHEET INDICATE ACCEPTANCE OF THIS SHEET

REF. NO. E407 OF 17

AE FIRM: GOODWYN | MILLS | CAWOOD — MERRICK & COMPANY — JOINT VENTURE

NASA AE CONTRACT NO. NNM12AA49C NNM12AA68T

SUBMITTED: JENNIFER LANDRY
APPROVAL RECOMMENDED: ANDY ROWLAND, A522 PROJECT AE
APPROVED: JIMMY GUARIN

AE: DATE: 11/04/13
DESIGNED S. CRITTENDEN
DRAWN M. PATE
CHECKED J. AVERRETT
SCALE: AS SHOWN
APPROVAL RECOMMENDED: ANDY ROWLAND, A522 SUPPORT AE
APPROVAL RECOMMENDED: NELSON OLINGER, A522 TEAM LEAD
SPEC. NO. M5057
A522 GROUP LEAD DATE: 11/04/13

DRAWING NO. FAC-DA-4755-E407
SHEET __ OF __

ALL WORK SHOWN ON THIS SHEET IS ADD ALT #4

MSFC Master Bid Disk 03-26-2014

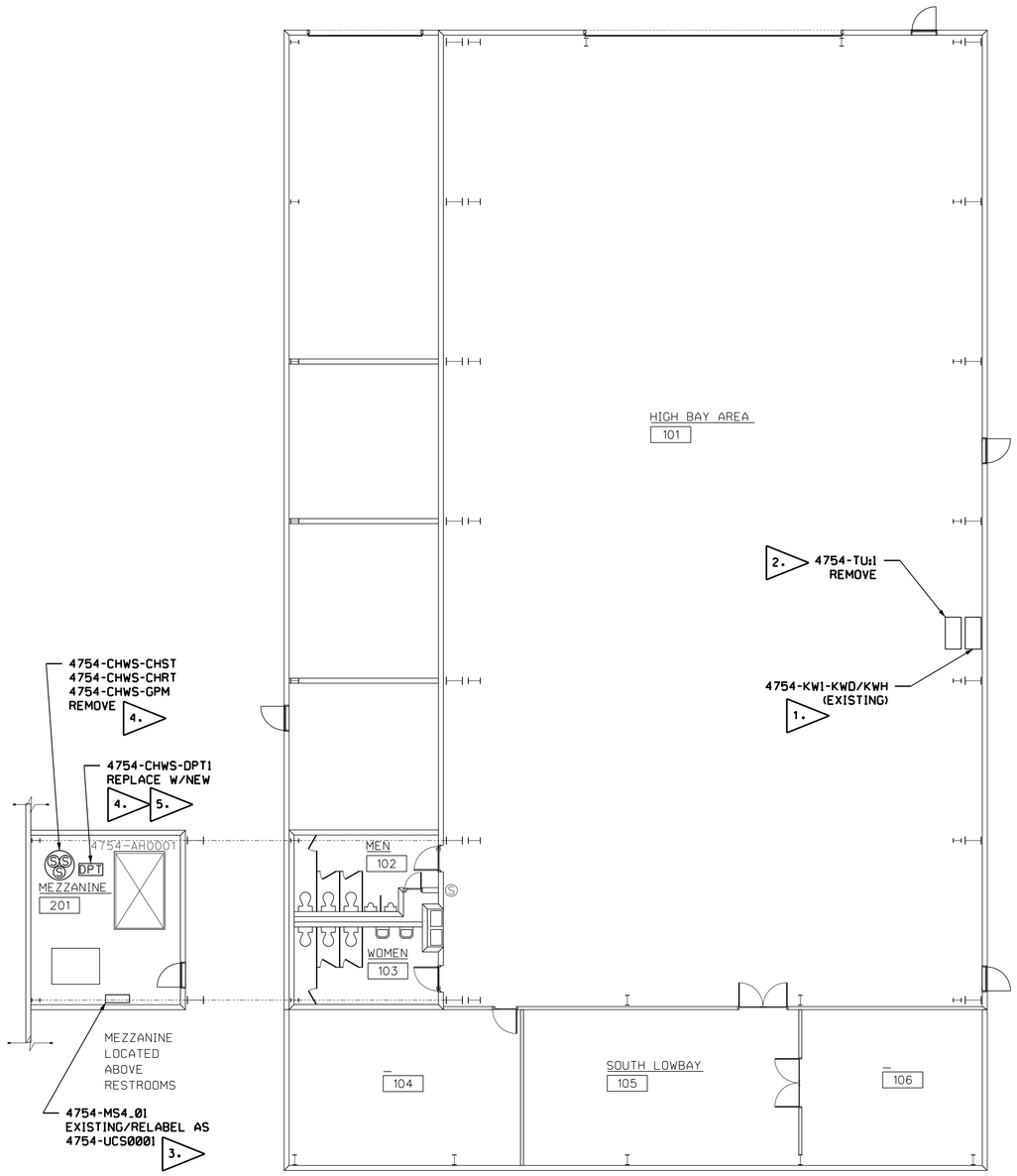

BUILDING 4754
UCS DEMO AND NEW WORK PLAN
SCALE: 1/8" = 1'-0"

0 4' 8' 12'

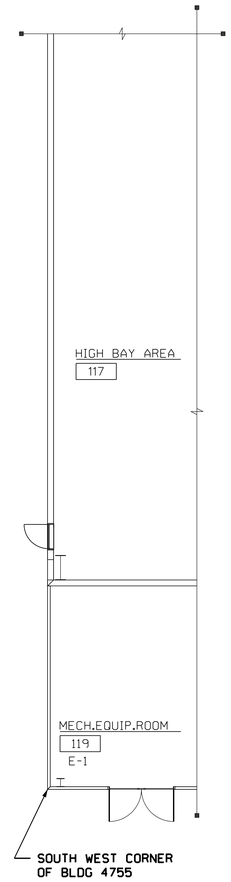

UCS GENERAL NOTES:

1. ALL ELECTRICAL WORK SHALL COMPLY WITH 2011 NATIONAL ELECTRICAL CODE AND SPEC. NO. FAC-M5057 AS MINIMUM STANDARDS. ITEMS SPECIFIED BY BRAND NAME AND PART NUMBER SHALL NOT BE SUBSTITUTED SO THAT CONTINUOUS SYSTEM COMPATIBILITY IS ASSURED.
2. SENSOR CABLE SHALL BE 2 OR 4 CONDUCTOR AS SHOWN, COPPER, POLYMER ALLOY INSULATED, TWISTED PAIRS, PLENUM RATED, EACH PAIR HAVING A 24 AWG STRANDED DRAIN WIRE.
   1 PAIR COLOR CODE: BLACK/RED 22 GA. (7X30) WEST PENN WIRE PN 25291B, OR APPROVED EQUAL.
   2 PAIR COLOR CODE: BLACK/RED WHITE/GREEN 22 GA. (7X30) WEST PENN WIRE PN 25510B, OR APPROVED EQUAL. PH# 1-800-245-4964.
3. DATA CABLE SHALL BE 2 CONDUCTOR, COPPER, FOAM TEFLON INSULATION, TWISTED PAIR, PLENUM RATED, PAIR COLOR CODE: WHITE/BLUE 24AWG (7 X 32) WITH STRANDED DRAIN WIRE. WEST PENN D254851, PH# 800-245-4964 OR BELDEN PN 82841, PH# 800-235-3361 OR APPROVED EQUAL.
4. 24VAC POWER SUPPLY CABLE FOR VALVE AND DAMPER ACTUATORS SHALL BE 2 CONDUCTOR, POLYMER ALLOY INSULATION, PLENUM RATED, 1 PAIR COLOR CODE: RED/BLACK 16 AWG. WEST PENN P/N 25225B, PH # 800-245-4964 OR APPROVED EQUAL.
5. CONTRACTOR SHALL FURNISH ALL PARTS NECESSARY FOR A COMPLETE INSTALLATION.
6. MICROSCAN PRODUCTS ARE AVAILABLE FROM DORSETT TECHNOLOGIES, PH# 336-679-2126.
7. CONDUIT PENETRATIONS AT THE UCS PANEL(S) SHALL BE IN THE BOTTOM.
8. A MAXIMUM OF 5 SHIELD/DRAIN WIRES SHALL BE TERMINATED AT EACH GROUND BAR POSITION. SHIELD/DRAIN WIRES ARE NOT TO EXTEND IN TO THE I/O PANEL.
9. UPON COMPLETION OF ALL UCS RELATED WORK, A POINT TO POINT CHECKOUT SHALL BE CONDUCTED JOINTLY BY UCS PERSONNEL AND THE CONTRACTOR.
10. THE CONTRACTOR SHALL PROVIDE PROGRAMMING OF THE NEW UCS MONITORING POINTS TO THE INFOSCAN DATABASE TO ENABLE A COMPLETELY OPERATIONAL SYSTEM.
11. SEE MECHANICAL AND ELECTRICAL SECTIONS FOR RELATED EQUIPMENT LOCATIONS.
12. INSTALL NEW UCS SENSOR, 24VAC POWER AND/OR DATA CABLE TO ALL NEW AND REPLACED FIELD DEVICES. SPLICING OF WIRING WILL NOT BE PERMITTED.
13. CONTRACTOR SHALL COORDINATE ALL PHASES OF WORK CLOSELY WITH COTR AND UCS.
14. ALL NEW UCS PANELS SHALL HAVE AT A MINIMUM THE FOLLOWING INSTALLED:
    A. NEW MS5-UNV I/O ENCLOSURE (SK MS54)
    B. POWER FAIL RELAY (SK PFR1)
    C. 1KW UPS MOUNTED ON METAL SHELF BELOW UCS PANEL (SK MS54)
    D. 24VAC POWER SUPPLY (SK PS1)
    E. 25 POSITION GROUNDING BAR IN THE BOTTOM OF THE BOTTOM CABLE TROUGH
    MS5-UNV I/O CARDS AND COMM LINES WILL BE SPECIFIED FOR EACH LOCATION
15. SK SPP1 REQUIRES TWO (2) PER APPLICATION.

UCS DEMOLITION NOTES:

D1. CONTRACTOR SHALL COORDINATE ALL PHASES OF DEMOLITION WORK CLOSELY WITH COTR AND UCS.

D2. THE CONTRACTOR SHALL COORDINATE THE REMOVAL OF EXISTING UCS MONITORING POINTS FROM THE INFOSCAN DATABASE WITH THE UCS CONTRACTOR.

D3. CONTRACTOR SHALL RETURN REMOVED UCS PANEL COMPONENTS TO UCS VIA THE COTR TO INCLUDE X-TALKS, MODEMS, AND MS4 I/O CARDS.

D4. EXTENT OF DEMOLITION FOR ITEMS IDENTIFIED AS TO BE REMOVED SHALL INCLUDE ANY ASSOCIATED AUXILIARY ACCESSORIES, ABANDONED WIRING, CONDUIT AND CONDUIT SUPPORTS UNLESS OTHERWISE NOTED.

D5. WHERE CONDUIT AND DEVICES ARE REMOVED FROM WALLS, REPAIR AND REPAINT TO MATCH EXISTING WALL FINISH.

D6. WHERE UCS DEVICES ARE REMOVED FROM MECHANICAL PIPING, PLUG AND/OR CAP FITTINGS.

UCS FLAG NOTES:

1. REMOVE EXISTING UCS WIRING AND ABANDONED CONDUIT BACK TO 4754-TU:1 PER FID01 DEMO SCHEDULE.
2. REMOVE EXISTING 4754-TU:1 ENCLOSURE. REMOVE ALL EXPOSED CONDUIT AND WIRING FROM TU TO FID01. CONDUIT BELOW CONCRETE SHALL BE ABANDONED IN PLACE. CUT AND CAP AT BOTH ENDS. REMOVE ALL REMAINING FIELD DEVICES, WIRING AND CONDUIT ASSOCIATED WITH TU.
3. RELABEL EXISTING UCS PANEL AS 4754-UCS0001. RELABEL EXISTING POWER FAIL I/O POINT TO MATCH NEW PANEL DESIGNATOR.
4. REMOVE EXISTING UCS FIELD DEVICES, WIRING AND ABANDONED CONDUIT BACK TO 4755-TU:E1 PER FID01 DEMO SCHEDULE.
5. FURNISH AND INSTALL NEW UCS FIELD DEVICES, WIRING AND CONDUIT TO 4754-UCS0001 PER NEW UCS WIRING DETAILS.

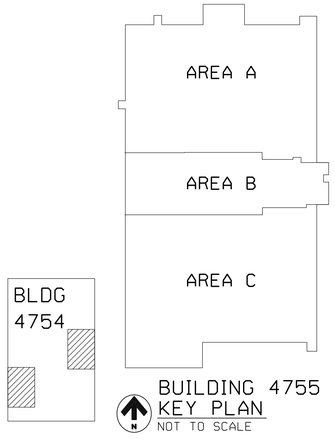

BUILDING 4755
KEY PLAN
NOT TO SCALE

WARNING
DO NOT SCALE THIS DRAWING
THIS DRAWING WAS DESIGNED TO BE PRINTED AT A NASA SHEET SIZE: MSFC STD. SIZE 40" X 28"

PRELIMINARY CADD DWG.
CHANGES TO THIS DRAWING SHALL BE MADE ON CADD ONLY.
3426839 02-06-13 DGB
LATEST CADD UPDATE: 10-24-13 3:30 PM
BY: DUSTIN BORDER

REV.	BY	DATE	REVISION	C.I. NO.	APPROVED

Marshall Space Flight Center
Huntsville, Alabama 35812

WORK REQUEST NO. 3426839

BUILDING 4755

HVAC RENOVATION

UCS GENERAL NOTES AND BLDG 4754 DEMO AND NEW PLAN

BASE BID

AE FIRM: KAYA Associates, Inc.
NASA AE CONTRACT NO. NAS8- NNM11AA39C

SIGNATURES ON INDEX SHEET INDICATE ACCEPTANCE OF THIS SHEET

SUBMITTED: | APPROVAL RECOMMENDED: AD22 PROJECT A/E | APPROVED:
AE: DATE: | APPROVAL RECOMMENDED: AD22 SUPPORT A/E | AB22 GROUP LEAD DATE:
DESIGNED D. BORDER
DRAWN D. BORDER
CHECKED J. PAGE
SCALE: AS NOTED
SPEC. NO. FAC M5057
KAYA Associates, Inc.

DRAWING NO. FAC-DA-4755-UCS1
SHEET OF

REF. NO. UCS1 OF 40

MSFC-FORM 232 REV. 8-21-89-RCL

N:*DesignProjects*4755*DA-Mech. CoF*UCS1.dgn

MSFC Master Bid Disk 03-26-2014

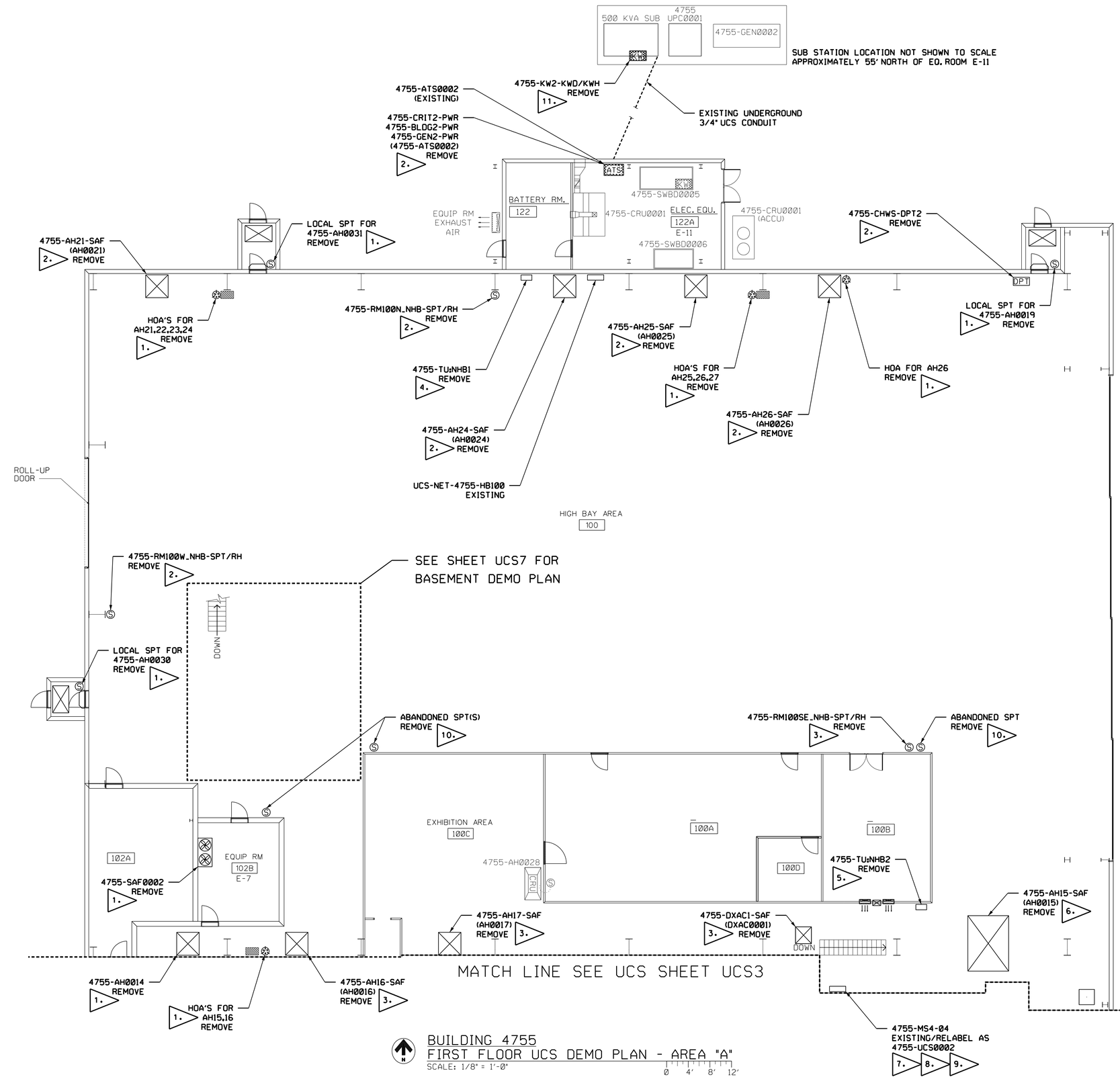

BUILDING 4755
FIRST FLOOR UCS DEMO PLAN - AREA "A"
SCALE: 1/8" = 1'-0"
0 4' 8' 12'

UCS FLAG NOTES:

1. REMOVE EXISTING AIR HANDLER LOCAL CONTROLS TO INCLUDE FIELD DEVICES, WIRING, ABANDONED CONDUIT AND/OR PNEUMATIC TUBING BACK TO SOURCE.
2. REMOVE EXISTING UCS FIELD DEVICES, WIRING AND ABANDONED CONDUIT BACK TO 4755-TU:NHB1 PER FID01 DEMO SCHEDULE.
3. REMOVE EXISTING UCS FIELD DEVICES, WIRING AND ABANDONED CONDUIT BACK TO 4755-TU:NHB2 PER FID01 DEMO SCHEDULE.
4. REMOVE EXISTING 4755-TU:NHB1 ENCLOSURE. REMOVE ALL CONDUIT AND WIRING FROM TU TO FID01. REMOVE ALL REMAINING FIELD DEVICES, WIRING AND CONDUIT ASSOCIATED WITH TU.
5. REMOVE EXISTING 4755-TU:NHB2 ENCLOSURE. REMOVE ALL CONDUIT AND WIRING FROM TU TO FID01. REMOVE ALL REMAINING FIELD DEVICES, WIRING AND CONDUIT ASSOCIATED WITH TU.
6. REMOVE EXISTING UCS FIELD DEVICES, WIRING AND ABANDONED CONDUIT BACK TO 4755-MS4-04 PER UCS DEMO WIRING DETAILS.
7. REMOVE EXISTING MS4 UNV I/O CARD #1 FROM 4755-MS4-04 AND RETURN TO UCS VIA COTR. SEE SHEET UCS8, NOTE 2 FOR NEW I/O CARD INSTALLATION.
8. REMOVE EXISTING UCS DATA CABLE AND CONDUIT FROM 4755-MS4_04 TO 4755-MS4_03 PER UCS COMM TRUNK DEMO DETAILS.
9. RELABEL EXISTING UCS PANEL AS 4755-UCS0002. RELABEL EXISTING POWER FAIL I/O POINT TO MATCH NEW PANEL DESIGNATOR.
10. REMOVE EXISTING LOCAL AND/OR ABANDONED SPT(S) AND/OR THERMOSTAT(S). REMOVE CONDUIT AND WIRING BACK TO SOURCE.
11. REMOVE EXISTING UCS WIRING AND ABANDONED CONDUIT BACK TO 4755-MS4_03 PER UCS DEMO WIRING DETAILS. SEE SHEET UCS4 FOR PANEL LOCATION.

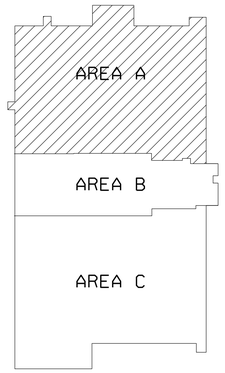

BUILDING 4755
KEY PLAN
NOT TO SCALE

WARNING
DO NOT SCALE THIS DRAWING
THIS DRAWING WAS DESIGNED TO BE PRINTED AT A NASA SHEET SIZE: MSFC STD. SIZE 40" X 28"

PRELIMINARY CADD DWG.
CHANGES TO THIS DRAWING SHALL BE MADE ON CADD ONLY.
3426839 02-06-13 DGB
LATEST CADD UPDATE: 10-24-13 3:30 PM
BY: DUSTIN BORDER

REV.	BY	DATE	REVISION	C.I. NO.	APPROVED

Marshall Space Flight Center
Huntsville, Alabama 35812

WORK REQUEST NO. 3426839

BUILDING 4755
HVAC RENOVATION
FIRST FLOOR UCS DEMO PLAN - AREA "A"

BASE BID

AE FIRM: KAYA Associates, Inc.
NASA AE CONTRACT NO. NAS8- NNM11AA39C
SUBMITTED: APPROVAL RECOMMENDED: AD22 PROJECT A/E APPROVED:
AE: DATE: APPROVAL RECOMMENDED: AD22 SUPPORT A/E AB22 GROUP LEAD DATE:
DESIGNED D. BORDER
DRAWN D. BORDER
CHECKED J. PAGE
APPROVAL RECOMMENDED: KAYA Associates, Inc.
SCALE: AS NOTED
SPEC. NO. FAC M5057
SIGNATURES ON INDEX SHEET INDICATE ACCEPTANCE OF THIS SHEET
REF. NO. UCS2 OF 40
DRAWING NO. FAC-DA-4755-UCS2
SHEET OF

MSFC-FORM 232 REV. 8-21-89-RCL

N:*DesignProjects*4755*DA-Mech. CoF*UCS2.dgn

MSFC Master Bid Disk 03-26-2014

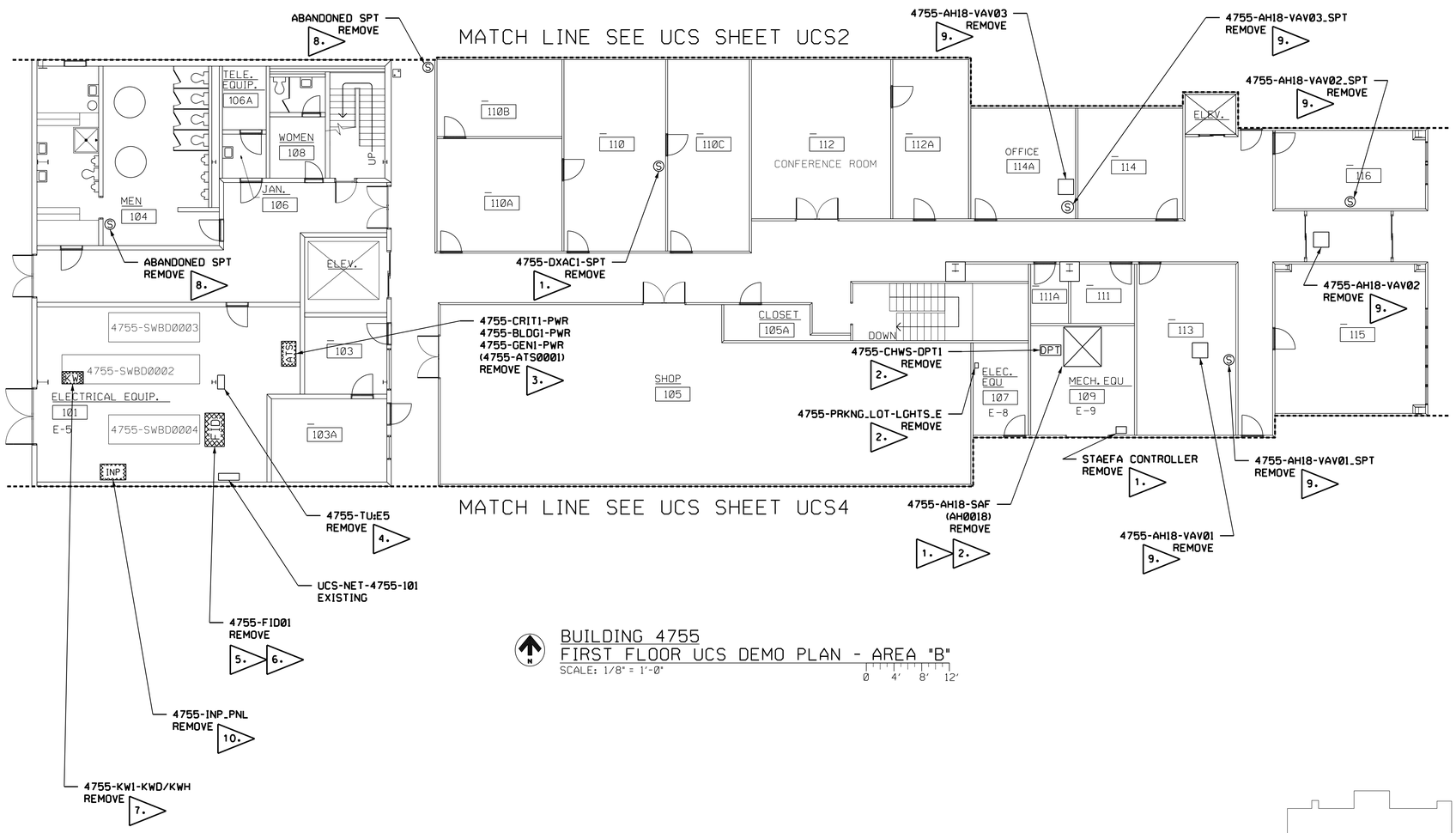

BUILDING 4755
FIRST FLOOR UCS DEMO PLAN - AREA "B"
SCALE: 1/8" = 1'-0"
0 4' 8' 12'

UCS FLAG NOTES:

1. REMOVE EXISTING AIR HANDLER LOCAL CONTROLS TO INCLUDE FIELD DEVICES, WIRING, ABANDONED CONDUIT AND/OR PNEUMATIC TUBING BACK TO SOURCE.
2. REMOVE EXISTING UCS FIELD DEVICES, WIRING AND ABANDONED CONDUIT BACK TO 4755-TU:SHB1 PER FID01 DEMO SCHEDULE. SEE UCS SHEET UCS4 FOR TU LOCATION.
3. REMOVE EXISTING UCS FIELD DEVICES, WIRING AND ABANDONED CONDUIT BACK TO 4755-TU:E5 PER FID01 DEMO SCHEDULE.
4. REMOVE EXISTING 4755-TU:E5 ENCLOSURE. REMOVE ALL CONDUIT AND WIRING FROM TU TO FID01. REMOVE ALL REMAINING FIELD DEVICES, WIRING AND CONDUIT ASSOCIATED WITH TU.
5. REMOVE EXISTING DORSETT XTALK ASSEMBLY AND RETURN TO UCS VIA THE COTR. REMOVE CAT.6 ETHERNET CABLE AND CONDUIT FROM FID01 TO UCS-NET-4755-101 PER UCS NETWORK DISTRIBUTION DEMO DETAILS.
6. REMOVE EXISTING 4755-FID01 ENCLOSURE. REMOVE ALL REMAINING FIELD DEVICES, WIRING AND CONDUIT ASSOCIATED WITH FID01 PER FID01 DEMO SCHEDULE.
7. REMOVE EXISTING UCS WIRING AND ABANDONED CONDUIT BACK TO 4755-MS4_03 PER UCS DEMO WIRING DETAILS. SEE SHEET UCS4 FOR PANEL LOCATION.
8. REMOVE EXISTING LOCAL AND/OR ABANDONED SPT(S) AND/OR THERMOSTAT(S). REMOVE CONDUIT AND WIRING BACK TO SOURCE.
9. REMOVE EXISTING VAV SPT, WIRING AND CONDUIT TO ASSOCIATED VAV. REMOVE ALL VAV TO VAV WIRING AND CONDUIT
10. REMOVE ABANDONED UCS INP_01 PANEL AND ALL ASSOCIATED ACCESSORIES, CONDUIT AND WIRING.

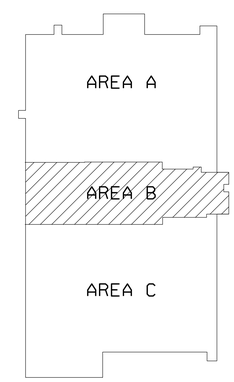

BUILDING 4755
KEY PLAN
NOT TO SCALE

WARNING

DO NOT SCALE THIS DRAWING

THIS DRAWING WAS DESIGNED TO BE PRINTED AT A NASA SHEET SIZE: MSFC STD. SIZE 40" X 28"

PRELIMINARY CADD DWG.

CHANGES TO THIS DRAWING SHALL BE MADE ON CADD ONLY.

3426839 02-06-13 DGB

LATEST CADD UPDATE: 10-24-13 3:30 PM

BY: DUSTIN BORDER

REV.	BY	DATE	REVISION	C.I. NO.	APPROVED

Marshall Space Flight Center
Huntsville, Alabama 35812

WORK REQUEST NO. 3426839

BUILDING 4755

HVAC RENOVATION

FIRST FLOOR UCS DEMO PLAN - AREA "B"

BASE BID

AE FIRM: KAYA Associates, Inc.

NASA AE CONTRACT NO. NAS8- NNM11AA39C

SUBMITTED: | APPROVAL RECOMMENDED: AD22 PROJECT A/E | APPROVED:

AE: DATE: | APPROVAL RECOMMENDED: AD22 SUPPORT A/E | AD22 GROUP LEAD DATE:

SIGNATURES ON INDEX SHEET INDICATE ACCEPTANCE OF THIS SHEET

DESIGNED D. BORDER
DRAWN D. BORDER
CHECKED J. PAGE

APPROVAL RECOMMENDED: KAYA Associates, Inc.

DRAWING NO. FAC-DA-4755-UCS3

REF. NO. UCS3 OF 40

SCALE: AS NOTED

SPEC. NO. FAC M5057

SHEET OF

MSFC-FORM 232 REV. 8-21-89-RCL

N:*DesignProjects*4755*DA-Mech. CoF*UCS3.dgn

MSFC Master Bid Disk 03-26-2014

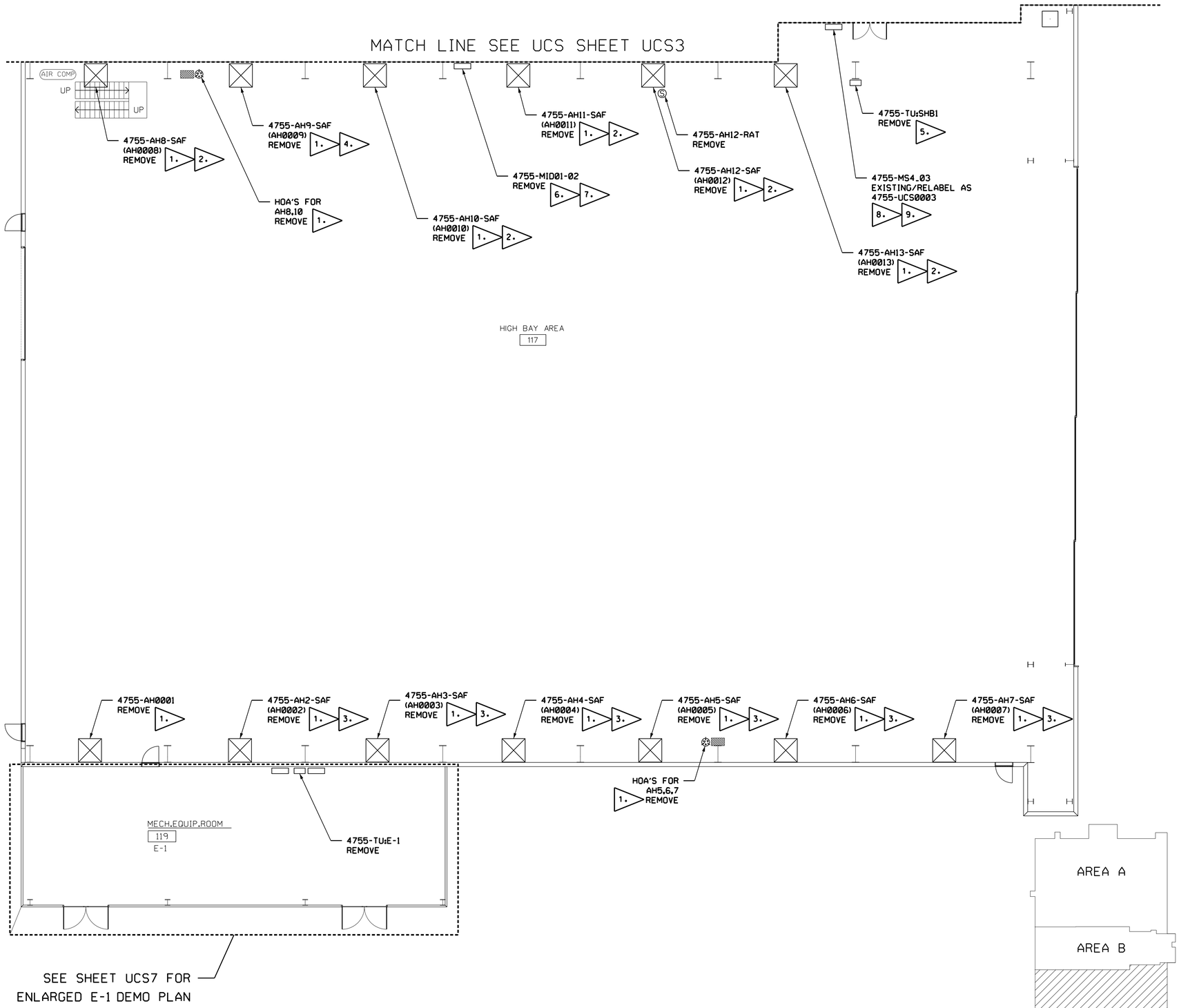

BUILDING 4755
FIRST FLOOR UCS DEMO PLAN - AREA "C"
SCALE: 1/8" = 1'-0"
0 4' 8' 12'

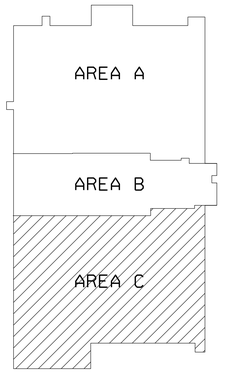

BUILDING 4755
KEY PLAN
NOT TO SCALE

UCS FLAG NOTES:

1. REMOVE EXISTING AIR HANDLER LOCAL CONTROLS TO INCLUDE FIELD DEVICES, WIRING, ABANDONED CONDUIT AND PNEUMATIC TUBING BACK TO SOURCE.
2. REMOVE EXISTING UCS FIELD DEVICES, WIRING AND ABANDONED CONDUIT BACK TO 4755-TU:SHB1 PER FID01 DEMO SCHEDULE.
3. REMOVE EXISTING UCS FIELD DEVICES, WIRING AND ABANDONED CONDUIT BACK TO 4755-TU:E1 PER FID01 DEMO SCHEDULE.
4. REMOVE EXISTING UCS FIELD DEVICES, WIRING AND ABANDONED CONDUIT BACK TO 4755-MS4_03 PER UCS DEMO WIRING DETAILS.
5. REMOVE EXISTING 4755-TU:SHB1 ENCLOSURE. REMOVE ALL CONDUIT AND WIRING FROM TU TO FID01. REMOVE ALL REMAINING FIELD DEVICES, WIRING AND CONDUIT ASSOCIATED WITH TU.
6. REMOVE EXISTING UCS DATA CABLE AND CONDUIT FROM 4755-MID01_02 TO 4755-MS4_03 PER UCS COMM TRUNK DEMO DETAILS.
7. REMOVE EXISTING 4755-MID01_02 ENCLOSURE. REMOVE ALL REMAINING FIELD DEVICES, WIRING AND CONDUIT ASSOCIATED WITH MID.
8. REMOVE EXISTING MS4 UNV I/O CARDS #1, 2 AND 3 FROM 4755-MS4-03 AND RETURN TO UCS VIA COTR. SEE SHEET UCS10. NOTE 2 FOR NEW I/O CARD INSTALLATION.
9. RELABEL EXISTING UCS PANEL AS 4755-UCS0003. RELABEL EXISTING POWER FAIL I/O POINT TO MATCH NEW PANEL DESIGNATOR.

WARNING
DO NOT SCALE THIS DRAWING
THIS DRAWING WAS DESIGNED TO BE PRINTED AT A NASA SHEET SIZE: MSFC STD. SIZE 40" X 28"

PRELIMINARY CADD DWG.
CHANGES TO THIS DRAWING SHALL BE MADE ON CADD ONLY.
3426839 02-06-13 DGB
LATEST CADD UPDATE: 10-24-13 3:30 PM
BY: DUSTIN BORDER

REV.	BY	DATE	REVISION	C.I. NO.	APPROVED

Marshall Space Flight Center
Huntsville, Alabama 35812

WORK REQUEST NO. 3426839

BUILDING 4755
HVAC RENOVATION
FIRST FLOOR UCS DEMO PLAN - AREA "C"

BASE BID

SIGNATURES ON INDEX SHEET INDICATE ACCEPTANCE OF THIS SHEET

REF. NO. UCS4 OF 40

AE FIRM: KAYA Associates, Inc.
NASA AE CONTRACT NO. NAS8- NNM11AA39C
SUBMITTED: APPROVAL RECOMMENDED: AD22 PROJECT A/E APPROVED:
AE: DATE: APPROVAL RECOMMENDED: AD22 SUPPORT A/E AB22 GROUP LEAD DATE:
DESIGNED D. BORDER
DRAWN D. BORDER
CHECKED J. PAGE
APPROVAL RECOMMENDED: KAYA Associates, Inc.
SCALE: AS NOTED SPEC. NO. FAC M5057
DRAWING NO. FAC-DA-4755-UCS4
SHEET OF

MSFC-FORM 232 REV. 8-21-89-RCL

N:*DesignProjects*4755*DA-Mech. CoF*UCS4.dgn

MSFC Master Bid Disk 03-26-2014

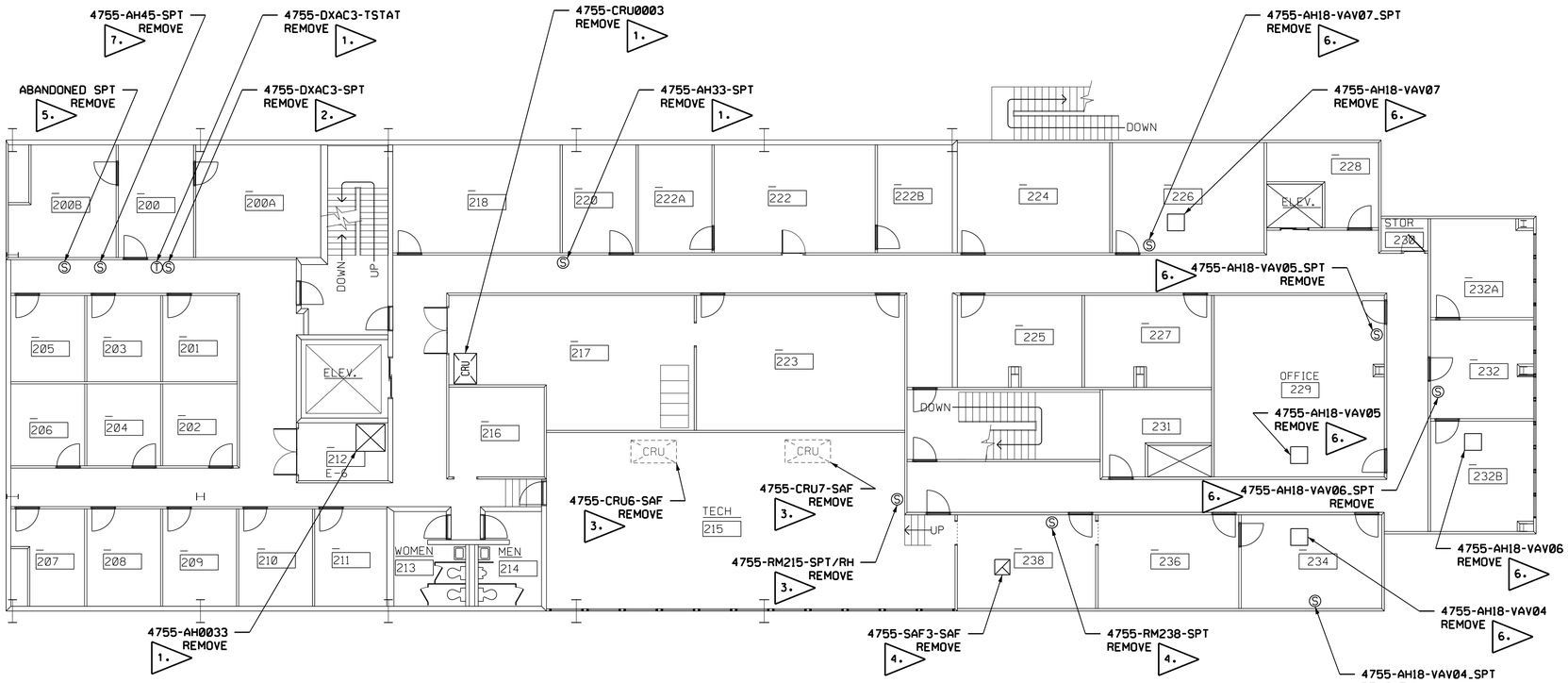

BUILDING 4755
SECOND FLOOR UCS DEMO PLAN - AREA "B"
SCALE: 1/8" = 1'-0"
0 4' 8' 12'

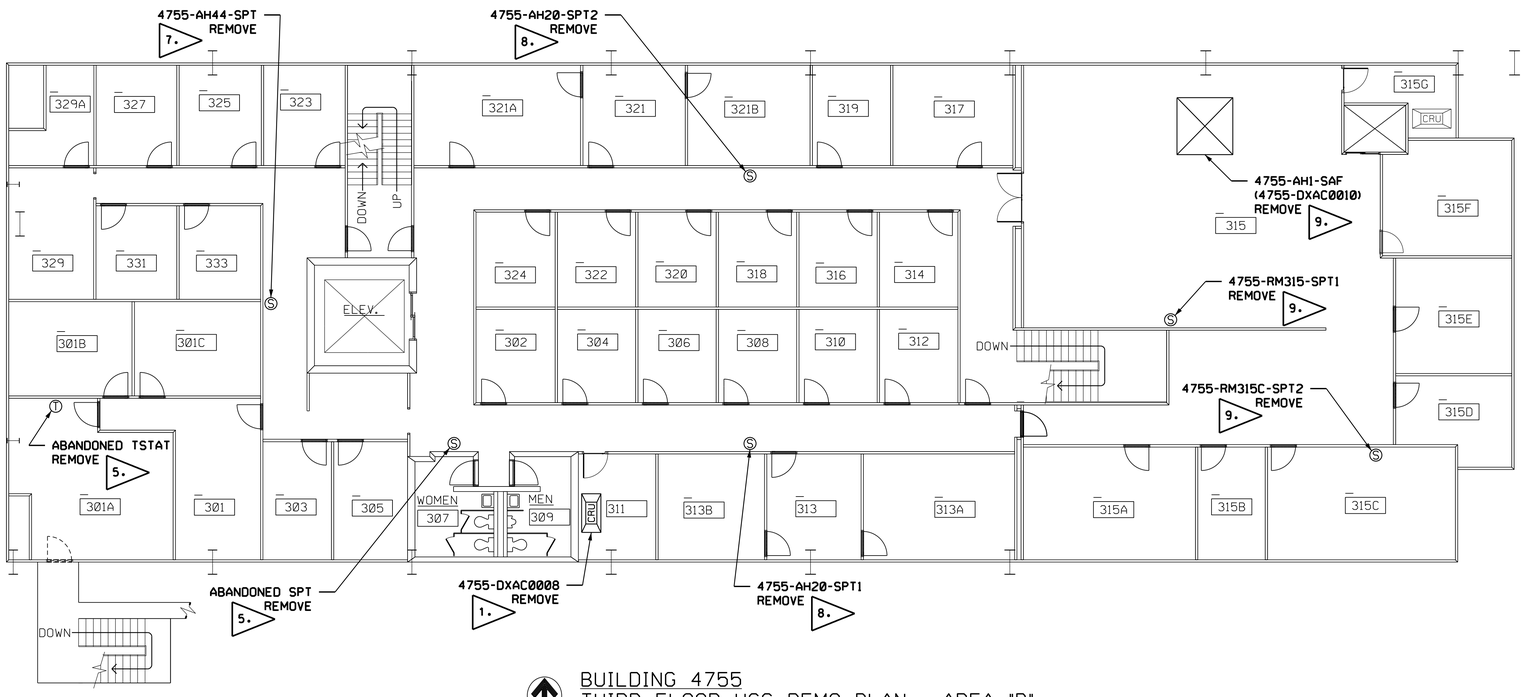

BUILDING 4755
THIRD FLOOR UCS DEMO PLAN - AREA "B"
SCALE: 1/8" = 1'-0"
0 4' 8' 12'

UCS FLAG NOTES:

1. REMOVE EXISTING AIR HANDLER LOCAL CONTROLS TO INCLUDE FIELD DEVICES, WIRING, ABANDONED CONDUIT AND/OR PNEUMATIC TUBING BACK TO SOURCE.
2. REMOVE EXISTING UCS FIELD DEVICES, WIRING AND ABANDONED CONDUIT BACK TO 4755-TU:FL4 PER FID01 DEMO SCHEDULE. SEE UCS SHEET UCS6 FOR TU LOCATION.
3. REMOVE EXISTING UCS FIELD DEVICES, WIRING AND ABANDONED CONDUIT BACK TO 4755-MID01_02 PER UCS DEMO WIRING DETAILS. SEE UCS SHEET UCS4 FOR MID01_02 LOCATION. CRU'S REMOVED BY OTHERS.
4. REMOVE EXISTING UCS FIELD DEVICES, WIRING AND ABANDONED CONDUIT BACK TO 4755-MS4_03 PER UCS DEMO WIRING DETAILS. SEE UCS SHEET UCS4 FOR MS4_03 LOCATION.
5. REMOVE EXISTING LOCAL AND/OR ABANDONED SPT(S) AND/OR THERMOSTAT(S). REMOVE CONDUIT AND WIRING BACK TO SOURCE.
6. REMOVE EXISTING VAV SPT, WIRING AND CONDUIT TO ASSOCIATED VAV. REMOVE ALL VAV TO VAV WIRING AND CONDUIT
7. REMOVE EXISTING UCS FIELD DEVICES, WIRING AND ABANDONED CONDUIT BACK TO 4755-UNV01 PER UCS DEMO WIRING DETAILS. SEE UCS SHEET UCS6 FOR UNV01 LOCATION.
8. REMOVE EXISTING UCS FIELD DEVICES, WIRING AND ABANDONED CONDUIT BACK TO 4755-UNV01_01 PER UCS DEMO WIRING DETAILS. SEE UCS SHEET UCS6 FOR UNV01_01 LOCATION.
9. REMOVE EXISTING UCS FIELD DEVICES, WIRING AND ABANDONED CONDUIT BACK TO 4755-SID01_IFC10 PER UCS DEMO WIRING DETAILS. SEE UCS SHEET UCS6 FOR SID01 LOCATION.

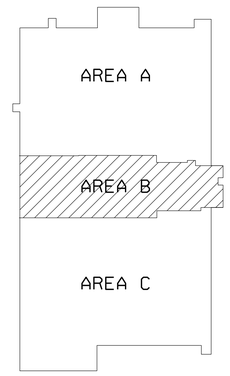

BUILDING 4755
KEY PLAN
NOT TO SCALE

WARNING
DO NOT SCALE THIS DRAWING
THIS DRAWING WAS DESIGNED TO BE PRINTED AT A NASA SHEET SIZE: MSFC STD. SIZE 40" X 28"

PRELIMINARY CADD DWG.
CHANGES TO THIS DRAWING SHALL BE MADE ON CADD ONLY.
3426839 02-06-13 DGB
LATEST CADD UPDATE: 10-24-13 3:30 PM
BY: DUSTIN BORDER

REV.	BY	DATE	REVISION	C.N. NO.	APPROVED

Marshall Space Flight Center
Huntsville, Alabama 35812

WORK REQUEST NO. 3426839

BUILDING 4755

HVAC RENOVATION
SECOND AND THIRD FLOOR UCS DEMO PLAN

BASE BID

AE FIRM: KAYA Associates, Inc.
NASA AE CONTRACT NO. NAS8- NNM11AA39C

SUBMITTED: | APPROVAL RECOMMENDED: AD22 PROJECT A/E | APPROVED:
AE: DATE: | APPROVAL RECOMMENDED: AD22 SUPPORT A/E | AD22 GROUP LEAD DATE:
DESIGNED D. BORDER
DRAWN D. BORDER
CHECKED J. PAGE
APPROVAL RECOMMENDED: KAYA Associates, Inc.
SCALE: AS NOTED | SPEC. NO. FAC M5057

SIGNATURES ON INDEX SHEET INDICATE ACCEPTANCE OF THIS SHEET

REF. NO. UCS5 OF 40

DRAWING NO. FAC-DA-4755-UCS5
SHEET OF

MSFC-FORM 232 REV. 8-21-89-RCL

N:*DesignProjects*4755*DA-Mech. CoF*UCS5.dgn

MSFC Master Bid Disk 03-26-2014

UCS FLAG NOTES:

1. REMOVE EXISTING AIR HANDLER LOCAL CONTROLS TO INCLUDE FIELD DEVICES, WIRING, ABANDONED CONDUIT AND PNEUMATIC TUBING BACK TO SOURCE.
2. REMOVE EXISTING UCS FIELD DEVICES, WIRING AND ABANDONED CONDUIT BACK TO 4755-TU:FL4 PER FID01 DEMO SCHEDULE.
3. REMOVE EXISTING UCS FIELD DEVICES, WIRING AND ABANDONED CONDUIT BACK TO 4755-UNV01 PER UCS DEMO WIRING DETAILS.
4. REMOVE EXISTING UCS FIELD DEVICES, WIRING AND ABANDONED CONDUIT BACK TO 4755-UNV01_01 PER UCS DEMO WIRING DETAILS.
5. REMOVE EXISTING UCS FIELD DEVICES, WIRING AND ABANDONED CONDUIT BACK TO 4755-SID01_IFC10 PER UCS DEMO WIRING DETAILS.
6. REMOVE EXISTING 4755-TU:FL4 ENCLOSURE. REMOVE ALL CONDUIT AND WIRING FROM TU TO FID01. REMOVE ALL REMAINING FIELD DEVICES, WIRING AND CONDUIT ASSOCIATED WITH TU.
7. REMOVE EXISTING 4755-SID01_IFC10 ENCLOSURE. REMOVE ALL REMAINING FIELD DEVICES, WIRING AND CONDUIT ASSOCIATED WITH SID01.
8. REMOVE ABANDONED AHU PNEUMATIC CONTROLLER ENCLOSURE. REMOVE ALL REMAINING FIELD DEVICES, WIRING AND CONDUIT ASSOCIATED WITH ENCLOSURE.
9. REMOVE EXISTING UCS DATA CABLE AND CONDUIT FROM 4755-UNV01 TO 4755-UNV01_01 PER UCS COMM TRUNK DEMO DETAILS.
10. REMOVE EXISTING MS4 UNV I/O CARD #1 FROM 4755-UNV01 AND RETURN TO UCS VIA COTR. SEE SHEET UCS13, NOTE 1 FOR NEW I/O CARD INSTALLATION.
11. REMOVE EXISTING MS4 UNV I/O CARD #1 FROM 4755-UNV01_01 AND RETURN TO UCS VIA COTR. SEE SHEET UCS13, NOTE 2 FOR NEW I/O CARD INSTALLATION.
12. RELABEL EXISTING UCS PANEL AS 4755-UCS0006. RELABEL EXISTING POWER FAIL I/O POINT TO MATCH NEW PANEL DESIGNATOR.
13. RELABEL EXISTING UCS PANEL AS 4755-UCS0007. RELABEL EXISTING POWER FAIL I/O POINT TO MATCH NEW PANEL DESIGNATOR.

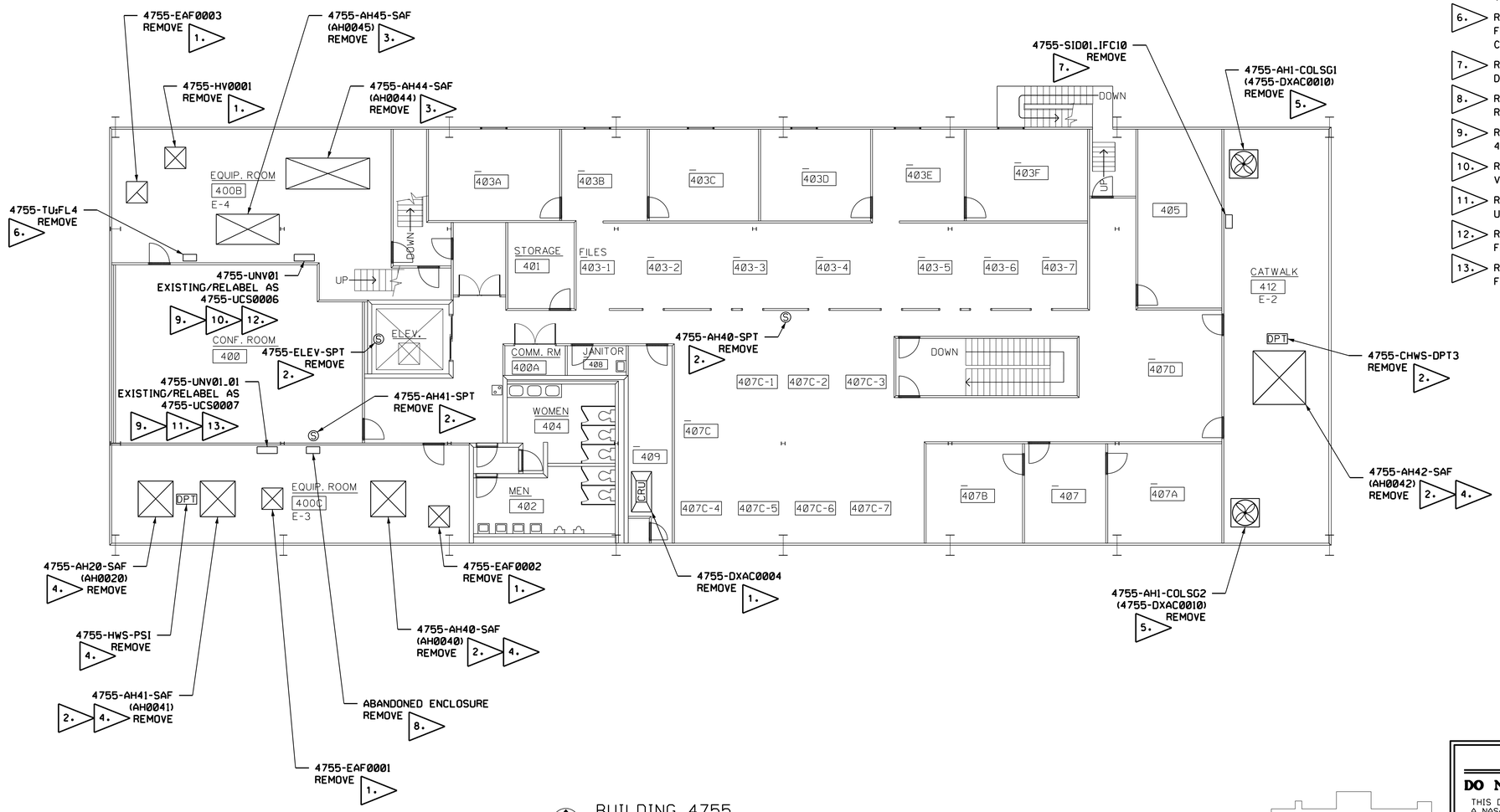

BUILDING 4755
FOURTH FLOOR UCS DEMO PLAN - AREA "B"
SCALE: 1/8" = 1'-0"

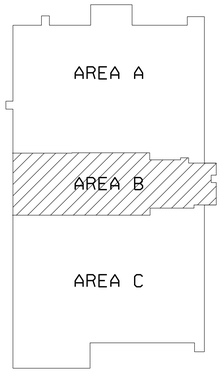

BUILDING 4755
KEY PLAN
NOT TO SCALE

WARNING
DO NOT SCALE THIS DRAWING
THIS DRAWING WAS DESIGNED TO BE PRINTED AT A NASA SHEET SIZE: MSFC STD. SIZE 40" X 28"

PRELIMINARY CADD DWG.
CHANGES TO THIS DRAWING SHALL BE MADE ON CADD ONLY.
3426839 02-06-13 DGB
LATEST CADD UPDATE: 10-24-13 3:30 PM
BY: DUSTIN BORDER

REV.	BY	DATE	REVISION	C.I. NO.	APPROVED

Marshall Space Flight Center
Huntsville, Alabama 35812

WORK REQUEST NO. 3426839

BUILDING 4755
HVAC RENOVATION
FOURTH FLOOR UCS DEMO PLAN

BASE BID

AE FIRM: KAYA Associates, Inc.
NASA AE CONTRACT NO. NASS-: NNM11AA39C
SUBMITTED: APPROVAL RECOMMENDED: AD22 PROJECT A/E
APPROVED:
AE: DATE: APPROVAL RECOMMENDED: AD22 SUPPORT A/E
AB22 GROUP LEAD DATE:
DESIGNED D. BORDER
DRAWN D. BORDER
CHECKED J. PAGE
APPROVAL RECOMMENDED: KAYA Associates, Inc.
SCALE: AS NOTED
SPEC. NO. FAC M5057
DRAWING NO. FAC-DA-4755-UCS6
SHEET OF

SIGNATURES ON INDEX SHEET INDICATE ACCEPTANCE OF THIS SHEET
REF. NO. UCS6 OF 40

MSFC-FORM 232 REV. 8-21-89-RCL

N:*DesignProjects*4755*DA-Mech. CoF*UCS6.dgn

MSFC Master Bid Disk 03-26-2014

UCS DEMO FLAG NOTES:

1. REMOVE EXISTING UCS WIRING AND ABANDONED CONDUIT BACK TO 4755-FID01 PER FID01 DEMO SCHEDULE. SEE UCS SHEET UCS3 FOR FID01 LOCATION.
2. REMOVE EXISTING UCS FIELD DEVICES. WIRING AND ABANDONED CONDUIT BACK TO 4755-TU:E1 PER FID01 DEMO SCHEDULE.
3. REMOVE EXISTING 4755-TU:E1 ENCLOSURE. REMOVE ALL CONDUIT AND WIRING FROM TU TO FID01. REMOVE ALL REMAINING FIELD DEVICES. WIRING AND CONDUIT ASSOCIATED WITH TU.
4. REMOVE EXISTING UCS DATA CABLE AND CONDUIT PER UCS COMM TRUNK DEMO DETAILS.
5. REMOVE EXISTING MS4 UNV I/O CARD #1 FROM 4755-UCS0009 AND RETURN TO UCS VIA COTR. SEE UCS SHEET UCS14. NOTE 2 FOR NEW I/O CARD INSTALLATION.
6. RELABEL EXISTING UCS PANEL AS 4755-UCS0005. RELABEL EXISTING POWER FAIL I/O POINT TO MATCH NEW PANEL DESIGNATOR.
7. REMOVE EXISTING LOCAL AND/OR ABANDONED SPT(S) AND/OR THERMOSTAT(S). REMOVE CONDUIT AND WIRING BACK TO SOURCE.
8. REMOVE EXISTING BTU METER SUPPLY/RETURN TEMPERATURE SENSORS AND FLOW METER TO INCLUDE WIRING AND CONDUIT. REMOVE BTU METER ENCLOSURE. REMOVE UCS DATA CABLE AND CONDUIT PER UCS DEMO COMM TRUNK DETAILS.

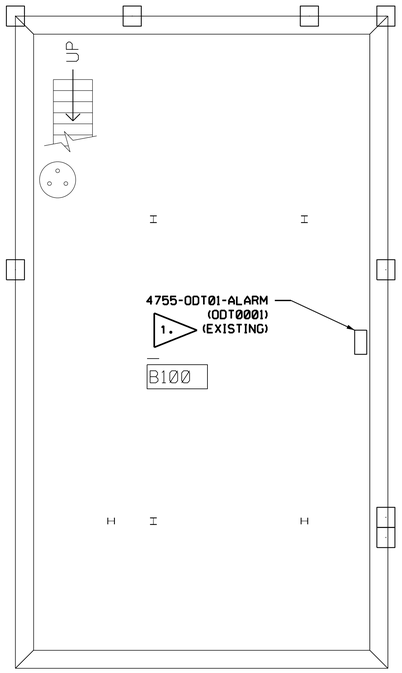

BUILDING 4755
BASEMENT UCS DEMO PLAN
SCALE: 3/16" = 1'-0"
0 2' 4' 6' 8'

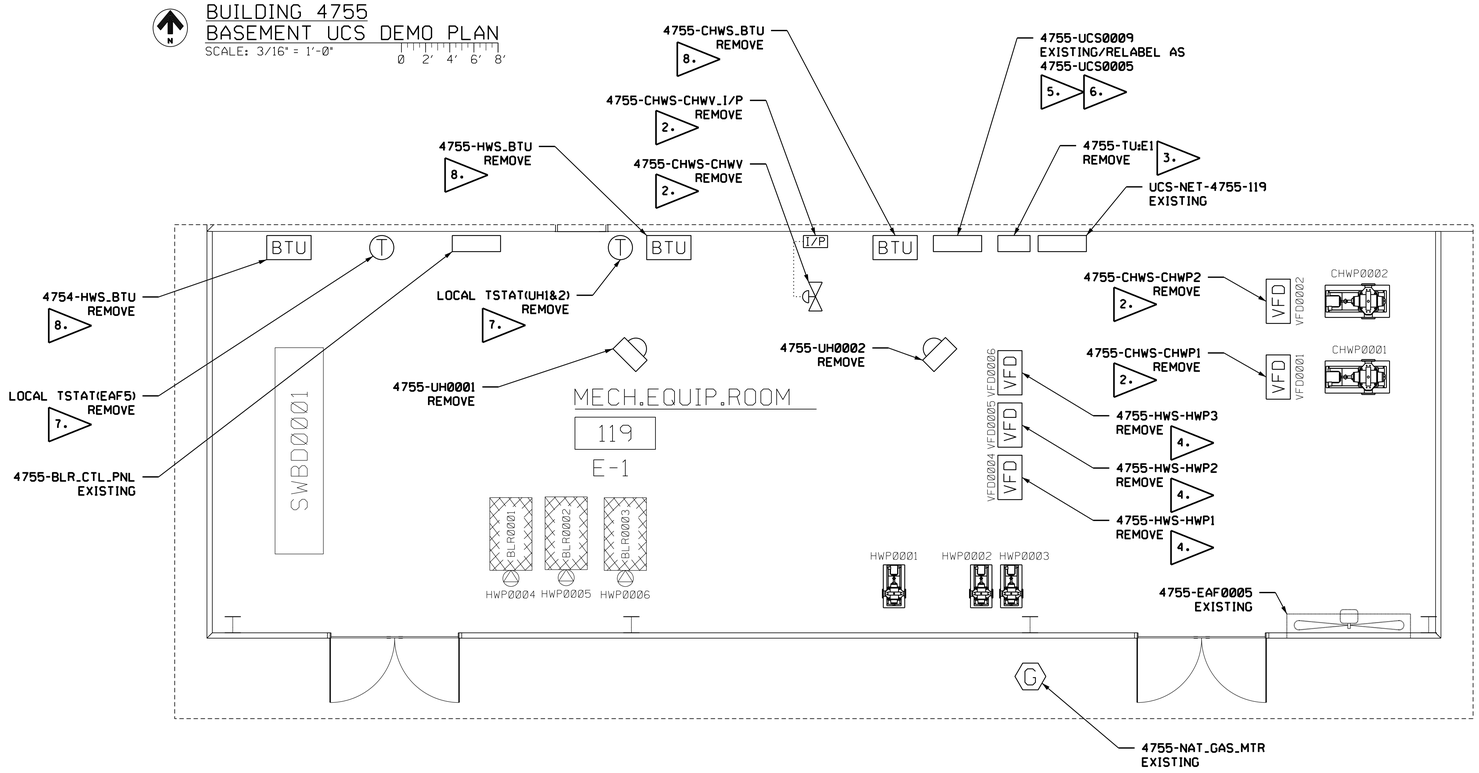

BUILDING 4755
ENLARGED ROOM 119/E-1 UCS DEMO PLAN
SCALE: 1/4" = 1'-0"
0 2' 4' 6'

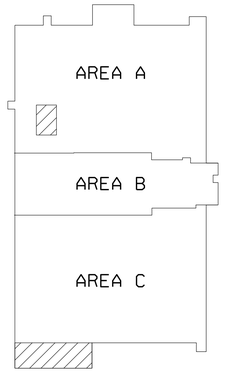

BUILDING 4755
KEY PLAN
NOT TO SCALE

WARNING

DO NOT SCALE THIS DRAWING

THIS DRAWING WAS DESIGNED TO BE PRINTED AT A NASA SHEET SIZE: MSFC STD. SIZE 40" X 28"

PRELIMINARY CADD DWG.

CHANGES TO THIS DRAWING SHALL BE MADE ON CADD ONLY.

3426839 02-06-13 DGB

LATEST CADD UPDATE: 10-24-13 3:30 PM

BY: DUSTIN BORDER

REV.	BY	DATE	REVISION	C.I. NO.	APPROVED

Marshall Space Flight Center
Huntsville, Alabama 35812

WORK REQUEST NO. 3426839

BUILDING 4755

HVAC RENOVATION

BASEMENT AND ENLARGED ROOM 119/E-1 UCS DEMO PLAN

BASE BID

AE FIRM: KAYA Associates, Inc.

NASA AE CONTRACT NO. NAS8- NNM11AA39C

SUBMITTED: APPROVAL RECOMMENDED: AD22 PROJECT A/E APPROVED:

AE: DATE: APPROVAL RECOMMENDED: AB22 GROUP LEAD DATE:

DESIGNED D. BORDER
DRAWN D. BORDER
CHECKED J. PAGE
AD22 SUPPORT A/E
APPROVAL RECOMMENDED: KAYA Associates, Inc.

SCALE: AS NOTED SPEC. NO. FAC M5057

DRAWING NO. FAC-DA-4755-UCS7

SHEET OF

SIGNATURES ON INDEX SHEET INDICATE ACCEPTANCE OF THIS SHEET

REF. NO. UCS7 OF 40

MSFC-FORM 232 REV. 8-21-89-RCL

N:*DesignProjects*4755*DA-Mech. CoF*UCS7.dgn

MSFC Master Bid Disk 03-26-2014

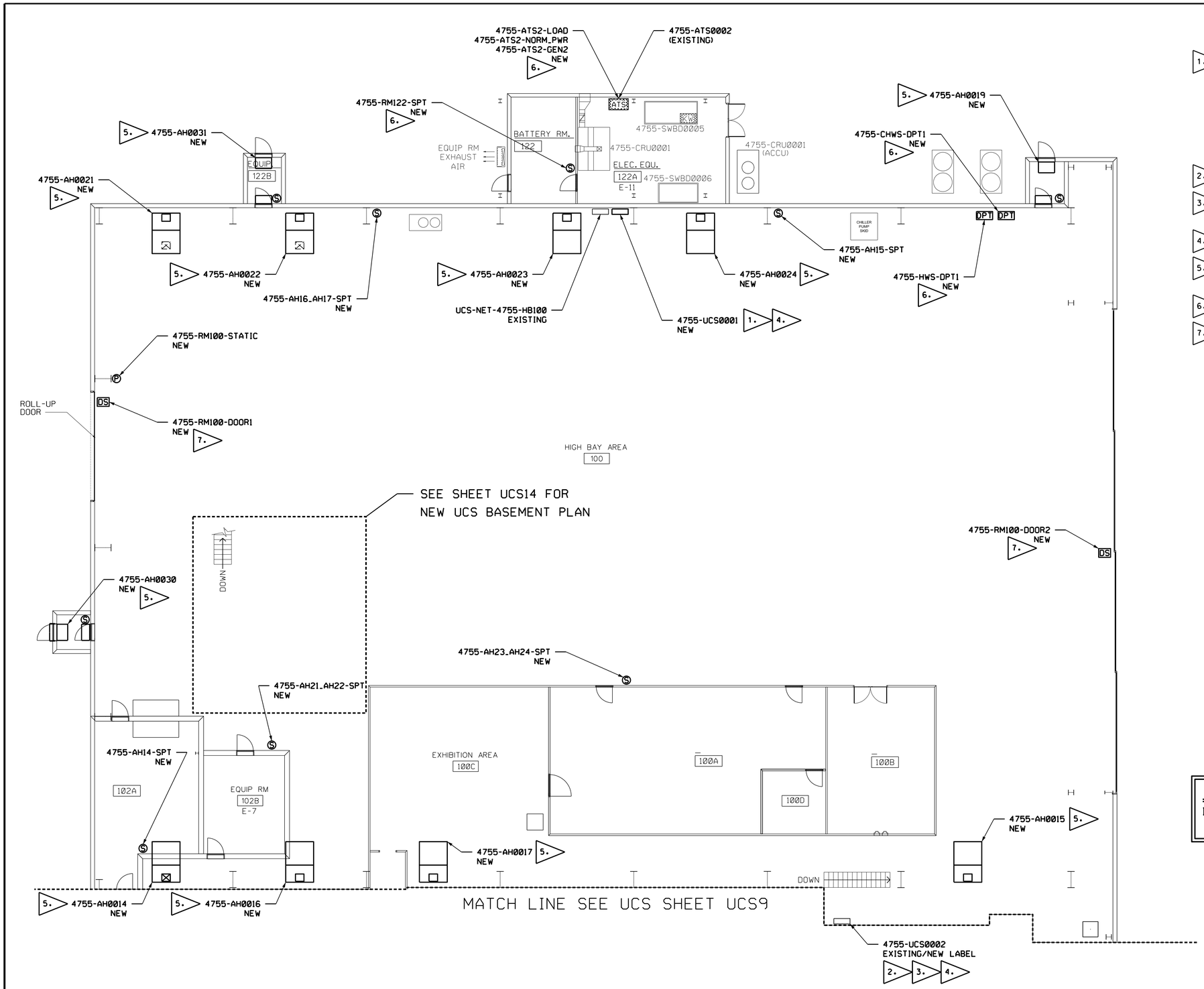

BUILDING 4755
FIRST FLOOR UCS NEW WORK PLAN - AREA "A"
SCALE: 1/8" = 1'-0"
0 4' 8' 12'

UCS FLAG NOTES:

1. FURNISH AND INSTALL NEW MS5 4 CARD PANEL (SK MS54_A) AT LOCATION SHOWN. UCS PANEL SHALL BE DESIGNATED AS 4755-UCS0001. INSTALLATION SHALL INCLUDE THE FOLLOWING:
   - A. POWER FAIL RELAY (SK PFR1)
   - B. 24 VAC POWER SUPPLY (SK PS1)
   - C. 25 POSITION GROUNDING BAR BONDED TO BOTTOM WIRE TROUGH
   - D. -4- MS5 UNV I/O CARDS

   INSTALL POWER FAIL RELAY TO EXISTING 120VAC, 20A DUPLEX RECEPTACLE FEEDING EXISTING UCS-NET-4755-HB100. NEW UNV PANEL SHALL SHARE EXISTING 1KW UPS
2. FURNISH AND INSTALL FOUR (4) NEW MS5 UNV I/O CARDS TO EXISTING 4755-UCS0002.
3. FURNISH AND INSTALL ONE (1) 24VAC POWER SUPPLY (SK PS1) TO EXISTING 4755-UCS0002. USE THE UCS PANEL DEDICATED 120VAC CIRCUIT FOR PRIMARY POWER TO THE POWER SUPPLY.
4. FURNISH AND INSTALL NEW UCS NETWORK CONNECTIONS TO EXISTING AND NEW UCS UNV I/O PANELS PER UCS NETWORK INFRASTRUCTURE DETAILS, SHEET UCS21.
5. FURNISH AND INSTALL NEW UCS FIELD DEVICES, WIRING AND CONDUIT FOR NEW AIR HANDLERS PER NEW UCS WIRING DETAILS AND MECHANICAL CONTROL SCHEMATICS.
6. FURNISH AND INSTALL NEW UCS FIELD DEVICES, WIRING AND CONDUIT PER NEW UCS WIRING DETAILS.
7. FURNISH AND INSTALL NEW MAGNETIC DOOR SWITCHES AT LOCATIONS SHOWN. MAGNETIC DOOR SWITCHES SHALL BE GE SENTROL #2202AU-L OR APPROVED EQUAL.

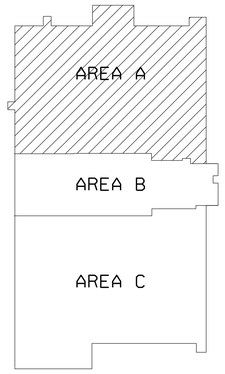

BUILDING 4755
KEY PLAN
NOT TO SCALE

WARNING

DO NOT SCALE THIS DRAWING

THIS DRAWING WAS DESIGNED TO BE PRINTED AT A NASA SHEET SIZE: MSFC STD. SIZE 40" X 28"

PRELIMINARY CADD DWG.

CHANGES TO THIS DRAWING SHALL BE MADE ON CADD ONLY.

3426839 02-06-13 DGB

LATEST CADD UPDATE: 10-24-13 3:30 PM BY: DUSTIN BORDER

REV.	BY	DATE	REVISION	C.I. NO.	APPROVED

Marshall Space Flight Center
Huntsville, Alabama 35812

WORK REQUEST NO. 3426839

BUILDING 4755

HVAC RENOVATION

FIRST FLOOR UCS NEW WORK PLAN - AREA "A"

BASE BID

AE FIRM: KAYA Associates, Inc.

NASA AE CONTRACT NO. NAS8- NNM11AA39C

SUBMITTED: APPROVAL RECOMMENDED: AD22 PROJECT A/E APPROVED:

AE: DATE: APPROVAL RECOMMENDED: AD22 SUPPORT A/E AB22 GROUP LEAD DATE:

DESIGNED D. BORDER
DRAWN D. BORDER
CHECKED J. PAGE
SCALE: AS NOTED

APPROVAL RECOMMENDED: KAYA Associates, Inc.

SPEC. NO. FAC M5057

DRAWING NO. FAC-DA-4755-UCS8

SHEET OF

SIGNATURES ON INDEX SHEET INDICATE ACCEPTANCE OF THIS SHEET

REF. NO. UCS8 OF 40

MSFC-FORM 232 REV.8-21-89-RCL

N:*DesignProjects*4755*DA-Mech. CoF*UCS8.dgn

MSFC Master Bid Disk 03-26-2014

UCS FLAG NOTES:

1. FURNISH AND INSTALL NEW UCS FIELD DEVICES, WIRING AND CONDUIT FOR NEW AIR HANDLERS PER NEW UCS WIRING DETAILS AND MECHANICAL CONTROL SCHEMATICS.
2. FURNISH AND INSTALL NEW UCS FIELD DEVICES, WIRING AND CONDUIT PER NEW UCS WIRING DETAILS.
3. FURNISH AND INSTALL NEW UCS VAV CONTROLS, FIELD DEVICES, WIRING AND CONDUIT PER UCS VAV DETAILS, COMM TRUNK LAYOUT AND MECHANICAL CONTROL SCHEMATICS.

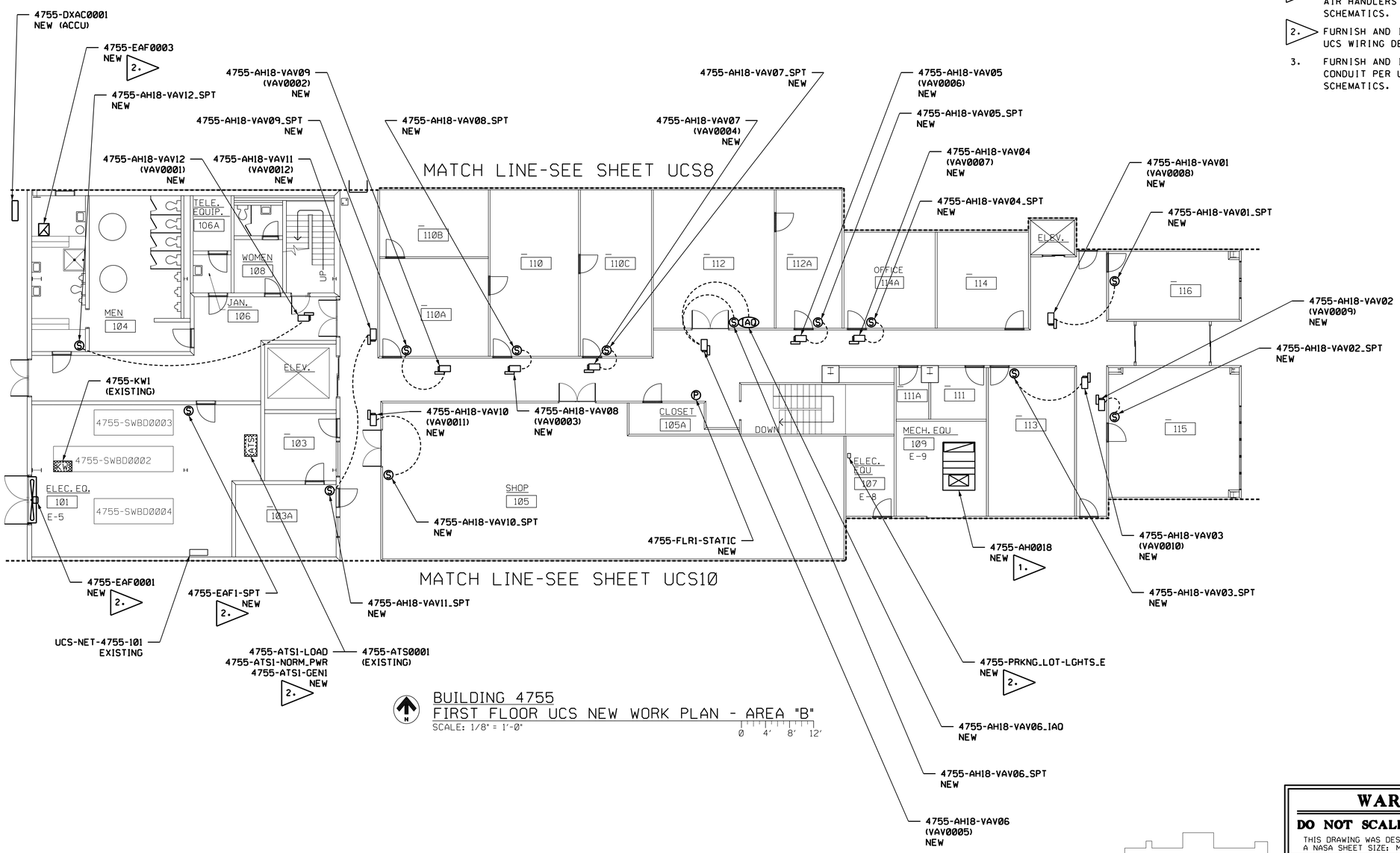

BUILDING 4755
FIRST FLOOR UCS NEW WORK PLAN - AREA "B"
SCALE: 1/8" = 1'-0"
0 4' 8' 12'

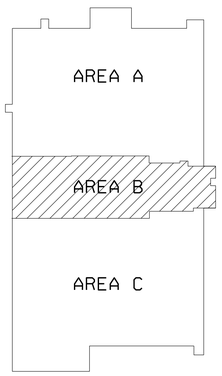

BUILDING 4755
KEY PLAN
NOT TO SCALE

WARNING

DO NOT SCALE THIS DRAWING

THIS DRAWING WAS DESIGNED TO BE PRINTED AT A NASA SHEET SIZE: MSFC STD. SIZE 40" X 28"

PRELIMINARY CADD DWG.

CHANGES TO THIS DRAWING SHALL BE MADE ON CADD ONLY.

3426839 02-06-13 DGB

LATEST CADD UPDATE: 10-24-13 3:30 PM

BY: DUSTIN BORDER

REV.	BY	DATE	REVISION	C.I. NO.	APPROVED

Marshall Space Flight Center
Huntsville, Alabama 35812

WORK REQUEST NO. 3426839

BUILDING 4755

HVAC RENOVATION

FIRST FLOOR UCS NEW WORK PLAN - AREA "B"

BASE BID

AE FIRM: KAYA Associates, Inc.

NASA AE CONTRACT NO. NAS8- NNM11AA39C

SUBMITTED: | APPROVAL RECOMMENDED: AD22 PROJECT A/E | APPROVED:

AE: DATE: | APPROVAL RECOMMENDED: AD22 SUPPORT A/E | AB22 GROUP LEAD DATE:

DESIGNED D. BORDER
DRAWN D. BORDER
CHECKED J. PAGE

APPROVAL RECOMMENDED: KAYA Associates, Inc.

SCALE: AS NOTED | SPEC. NO. FAC M5057

DRAWING NO. FAC-DA-4755-UCS9

SHEET OF

SIGNATURES ON INDEX SHEET INDICATE ACCEPTANCE OF THIS SHEET

REF. NO. UCS9 OF 40

MSFC-FORM 232 REV. 8-21-89-RCL

N:*DesignProjects*4755*DA-Mech. CoF*UCS9.dgn

MSFC Master Bid Disk 03-26-2014

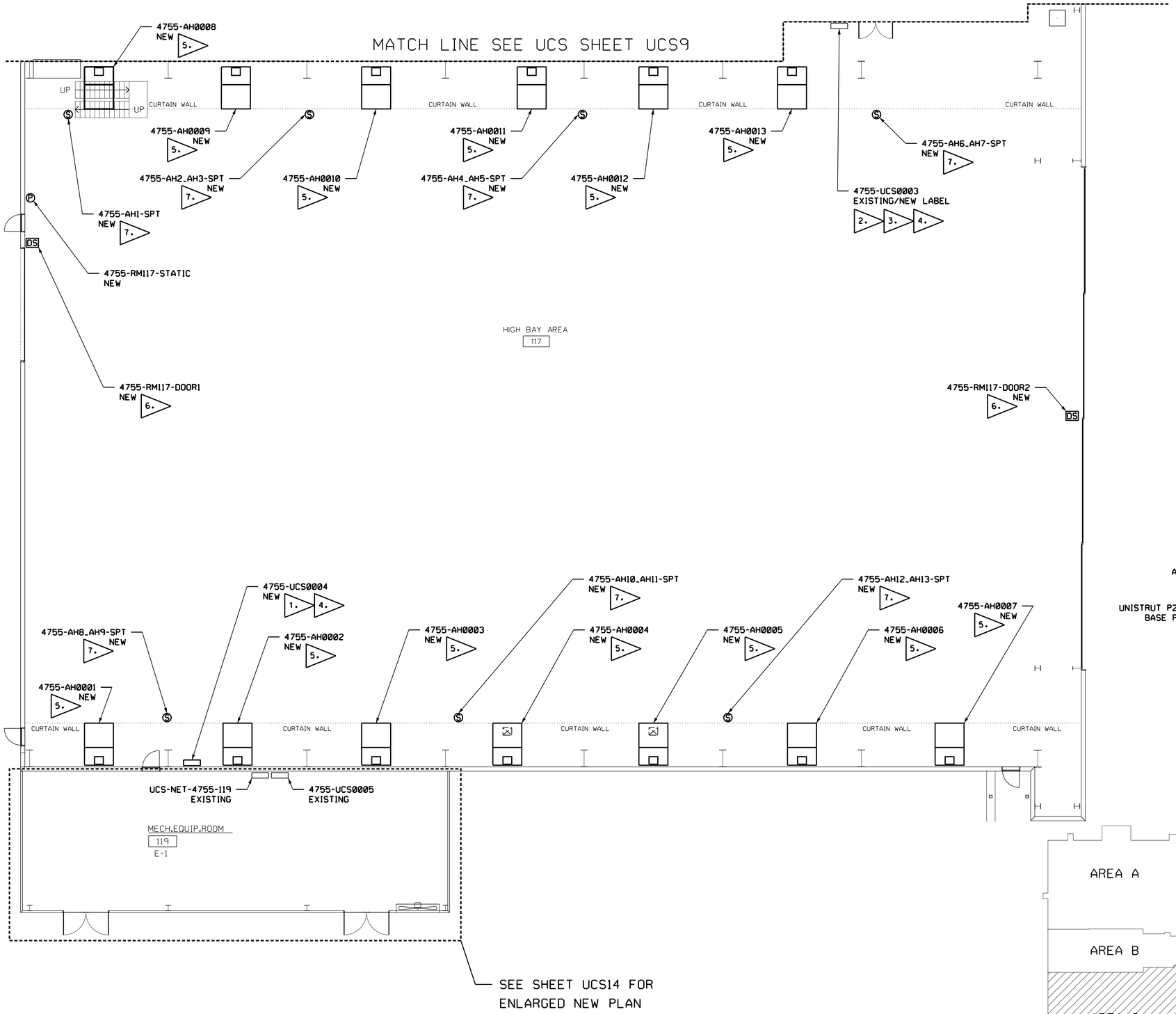

BUILDING 4755
FIRST FLOOR UCS NEW WORK PLAN - AREA "C"
SCALE: 1/8" = 1'-0"
0 4' 8' 12'

UCS FLAG NOTES:

1. FURNISH AND INSTALL NEW MS5 4 CARD PANEL (SK MS54) AT LOCATION SHOWN. UCS PANEL SHALL BE DESIGNATED AS 4755-UCS0004. INSTALLATION SHALL INCLUDE THE FOLLOWING:
   - A. POWER FAIL RELAY (SK PFR1)
   - B. 24 VAC POWER SUPPLY (SK PS1)
   - C. 1KW UPS MOUNTED ON SHELF BELOW PANEL
   - D. 25 POSITION GROUNDING BAR BONDED TO BOTTOM WIRE TROUGH
   - E. -4- MS5 UNV I/O CARDS
2. FURNISH AND INSTALL THREE (3) NEW MS5 UNV I/O CARDS TO EXISTING 4755-UCS0003.
3. FURNISH AND INSTALL ONE (1) 24VAC POWER SUPPLY (SK PS1) TO EXISTING 4755-UCS0003. USE THE UCS PANEL DEDICATED 120VAC CIRCUIT FOR PRIMARY POWER TO THE POWER SUPPLY.
4. FURNISH AND INSTALL NEW UCS NETWORK CONNECTIONS TO EXISTING AND NEW UCS UNV I/O PANELS PER UCS NETWORK INFRASTRUCTURE DETAILS. SHEET UCS21.
5. FURNISH AND INSTALL NEW UCS FIELD DEVICES. WIRING AND CONDUIT FOR NEW AIR HANDLERS PER NEW UCS WIRING DETAILS AND MECHANICAL CONTROL SCHEMATICS.
6. FURNISH AND INSTALL NEW MAGNETIC DOOR SWITCHES AT LOCATIONS SHOWN. MAGNETIC DOOR SWITCHES SHALL BE GE SENTROL #2202AU-L OR APPROVED EQUAL.
7. FURNISH AND INSTALL UNISTRUT STAND FOR MOUNTING OF SPT PER MOUNTING DETAIL BELOW.

SPT MOUNTING DETAIL (N.T.S.)

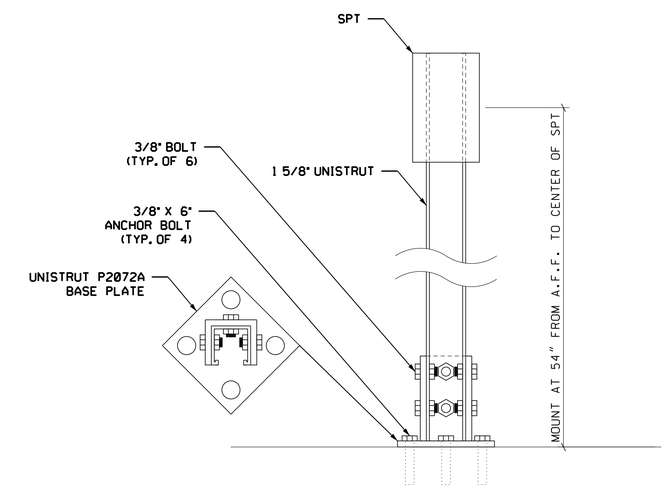

WARNING

DO NOT SCALE THIS DRAWING

THIS DRAWING WAS DESIGNED TO BE PRINTED AT A NASA SHEET SIZE: MSFC STD. SIZE 40" X 28"

PRELIMINARY CADD DWG.

CHANGES TO THIS DRAWING SHALL BE MADE ON CADD ONLY.

3426839 02-06-13 DGB

LATEST CADD UPDATE: 10-24-13 3:30 PM

BY: DUSTIN BORDER

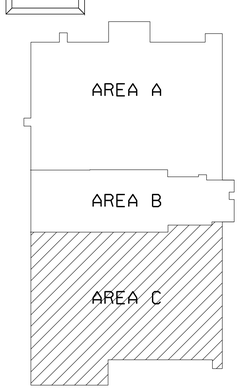

BUILDING 4755
KEY PLAN
NOT TO SCALE

BASE BID

REV.	BY	DATE	REVISION	C.I. NO.	APPROVED

Marshall Space Flight Center
Huntsville, Alabama 35812

WORK REQUEST NO. 3426839

BUILDING 4755

HVAC RENOVATION

FIRST FLOOR UCS NEW WORK PLAN - AREA "C"

AE FIRM: KAYA Associates, Inc.

NASA AE CONTRACT NO. NAS8- NNM11AA39C

SUBMITTED: | APPROVAL RECOMMENDED: AD22 PROJECT A/E | APPROVED:

AE: DATE: | APPROVAL RECOMMENDED: AD22 SUPPORT A/E | AB22 GROUP LEAD DATE:

DESIGNED D. BORDER
DRAWN D. BORDER
CHECKED J. PAGE

APPROVAL RECOMMENDED: KAYA Associates, Inc.

SCALE: AS NOTED | SPEC. NO. FAC M5057

SIGNATURES ON INDEX SHEET INDICATE ACCEPTANCE OF THIS SHEET

REF. NO. UCS10 OF 40

DRAWING NO. FAC-DA-4755-UCS10

SHEET OF

MSFC-FORM 232 REV. 8-21-89-RCL

N:*DesignProjects*4755*DA-Mech. CoF*UCS10.dgn

MSFC Master Bid Disk 03-26-2014

UCS FLAG NOTES:

1. FURNISH AND INSTALL NEW UCS FIELD DEVICES, WIRING AND CONDUIT FOR NEW AIR HANDLER PER NEW UCS WIRING DETAILS AND MECHANICAL CONTROL SCHEMATICS.
2. FURNISH AND INSTALL NEW UCS VAV CONTROLS, FIELD DEVICES, WIRING AND CONDUIT PER UCS VAV DETAILS, COMM TRUNK LAYOUT AND MECHANICAL CONTROL SCHEMATICS.

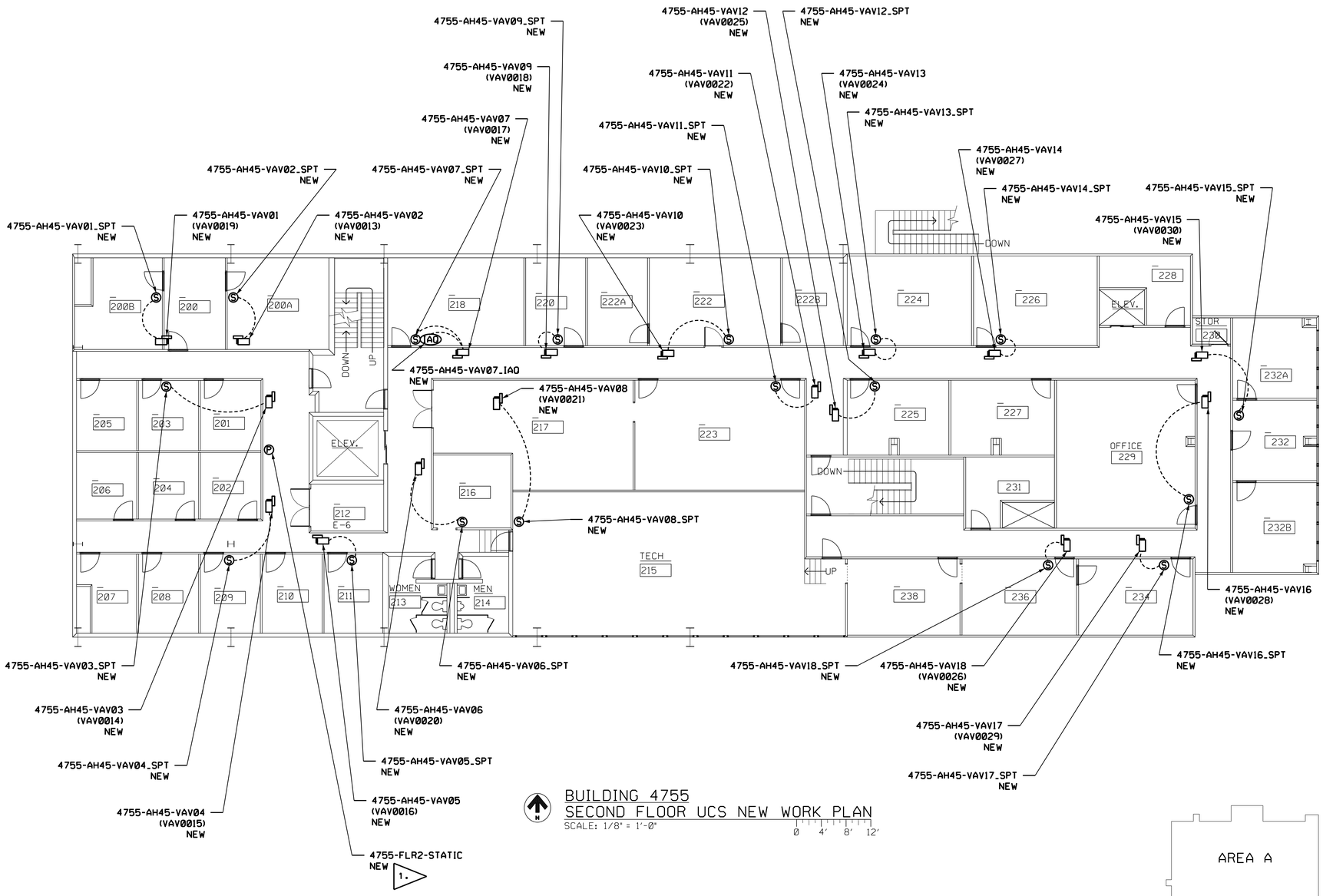

BUILDING 4755
SECOND FLOOR UCS NEW WORK PLAN
SCALE: 1/8" = 1'-0"
0 4' 8' 12'

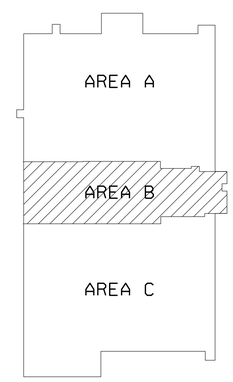

BUILDING 4755
KEY PLAN
NOT TO SCALE

WARNING
DO NOT SCALE THIS DRAWING
THIS DRAWING WAS DESIGNED TO BE PRINTED AT A NASA SHEET SIZE: MSFC STD. SIZE 40" X 28"

PRELIMINARY CADD DWG.
CHANGES TO THIS DRAWING SHALL BE MADE ON CADD ONLY.
3426839 02-06-13 DGB
LATEST CADD UPDATE: 10-24-13 3:30 PM
BY: DUSTIN BORDER

REV.	BY	DATE	REVISION	C.A. NO.	APPROVED

Marshall Space Flight Center
Huntsville, Alabama 35812

WORK REQUEST NO. 3426839

BUILDING 4755

HVAC RENOVATION
SECOND FLOOR UCS NEW WORK PLAN

BASE BID

AE FIRM: KAYA Associates, Inc.
NASA AE CONTRACT NO. NAS8- NNM11AA39C

SUBMITTED: | APPROVAL RECOMMENDED: AD22 PROJECT A/E | APPROVED:
AE: DATE: | APPROVAL RECOMMENDED: AD22 SUPPORT A/E | AD22 GROUP LEAD DATE:
DESIGNED D. BORDER
DRAWN D. BORDER
CHECKED J. PAGE
APPROVAL RECOMMENDED: KAYA Associates, Inc.
SCALE: AS NOTED
SPEC. NO. FAC M5057

SIGNATURES ON INDEX SHEET INDICATE ACCEPTANCE OF THIS SHEET
REF. NO. UCS11 OF 40

DRAWING NO. FAC-DA-4755-UCS11
SHEET OF

MSFC-FORM 232 REV. 8-21-89-RCL

N:*DesignProjects*4755*DA-Mech. CoF*UCS11.dgn

MSFC Master Bid Disk 03-26-2014

UCS FLAG NOTES:

1. FURNISH AND INSTALL NEW UCS FIELD DEVICES, WIRING AND CONDUIT FOR NEW AIR HANDLER PER NEW UCS WIRING DETAILS AND MECHANICAL CONTROL SCHEMATICS.
2. FURNISH AND INSTALL NEW UCS VAV CONTROLS, FIELD DEVICES, WIRING AND CONDUIT PER UCS VAV DETAILS, COMM TRUNK LAYOUT AND MECHANICAL CONTROL SCHEMATICS.

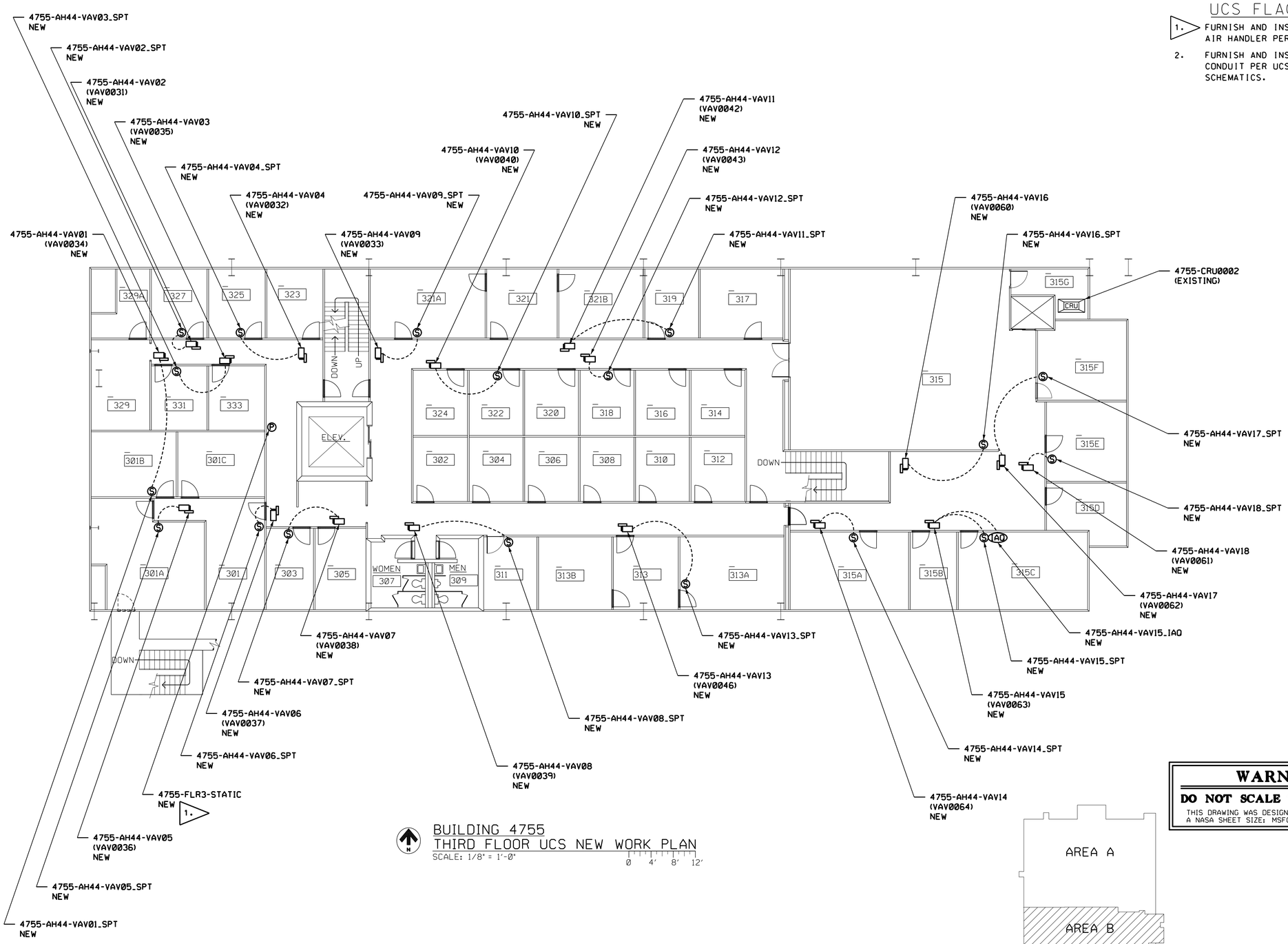

BUILDING 4755
THIRD FLOOR UCS NEW WORK PLAN
SCALE: 1/8" = 1'-0"
0 4' 8' 12'

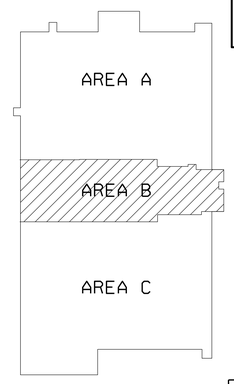

BUILDING 4755
KEY PLAN
NOT TO SCALE

WARNING

DO NOT SCALE THIS DRAWING

THIS DRAWING WAS DESIGNED TO BE PRINTED AT A NASA SHEET SIZE: MSFC STD. SIZE 40" X 28"

PRELIMINARY CADD DWG.

CHANGES TO THIS DRAWING SHALL BE MADE ON CADD ONLY.

3426839 02-06-13 DGB

LATEST CADD UPDATE: 10-24-13 3:30 PM BY: DUSTIN BORDER

REV.	BY	DATE	REVISION	C.I. NO.	APPROVED

Marshall Space Flight Center
Huntsville, Alabama 35812

WORK REQUEST NO. 3426839

BUILDING 4755

HVAC RENOVATION

THIRD FLOOR UCS NEW WORK PLAN

BASE BID

SIGNATURES ON INDEX SHEET INDICATE ACCEPTANCE OF THIS SHEET

REF. NO. UCS12 OF 40

AE FIRM: KAYA Associates, Inc.

NASA AE CONTRACT NO. NAS8- NNM11AA39C

SUBMITTED: APPROVAL RECOMMENDED: AD22 PROJECT A/E

APPROVED:

AE: DATE:

DESIGNED D. BORDER
DRAWN D. BORDER
CHECKED J. PAGE

APPROVAL RECOMMENDED: AD22 SUPPORT A/E

APPROVAL RECOMMENDED: KAYA Associates, Inc.

AB22 GROUP LEAD DATE:

DRAWING NO. FAC-DA-4755-UCS12

SCALE: AS NOTED

SPEC. NO. FAC M5057

SHEET OF

MSFC-FORM 232 REV. 8-21-89-RCL

N:*DesignProjects*4755*DA-Mech. CoF*UCS12.dgn

MSFC Master Bid Disk 03-26-2014

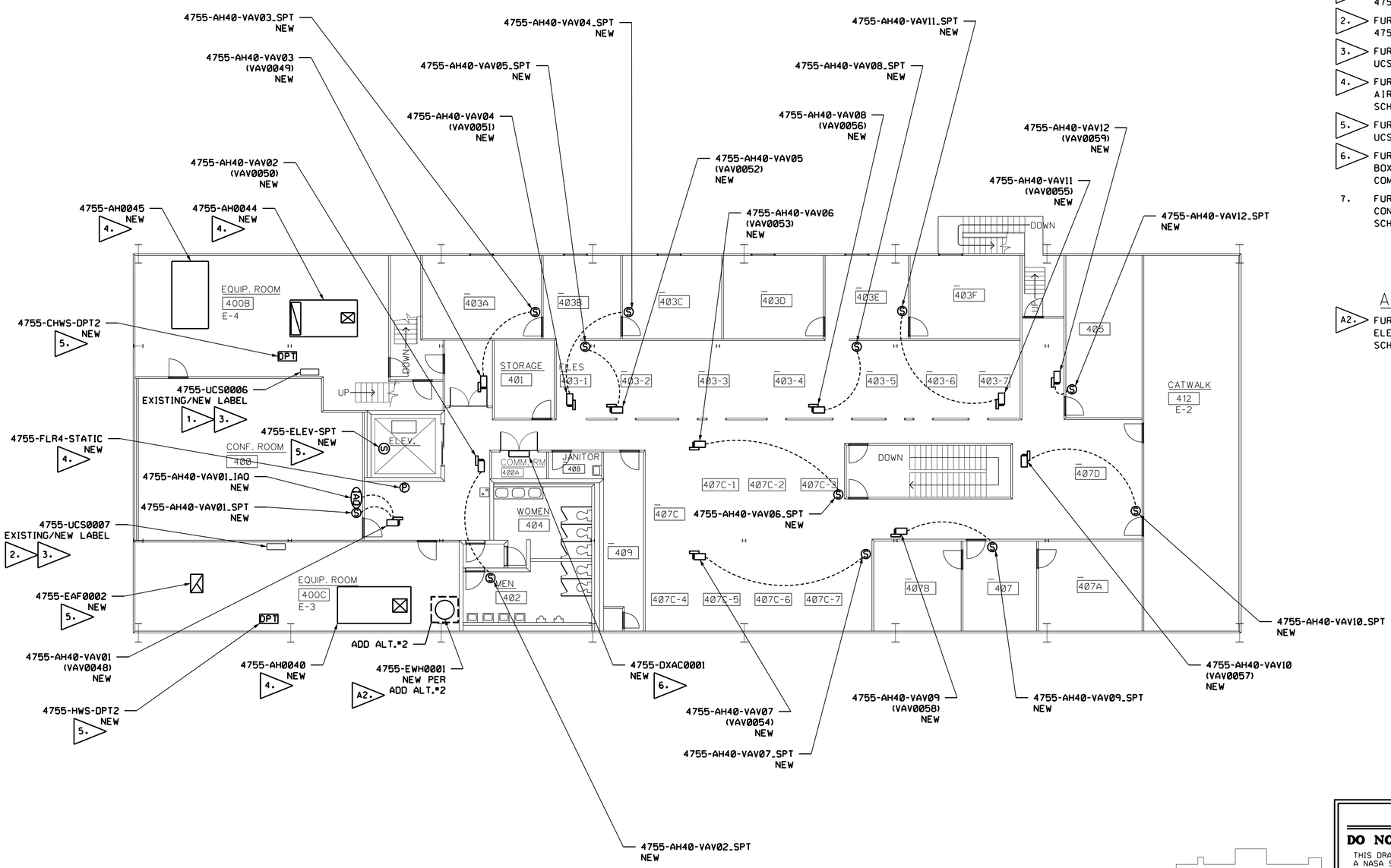

UCS FLAG NOTES:

1. FURNISH AND INSTALL TWO (2) NEW MS5 UNV I/O CARDS TO EXISTING 4755-UCS0006.
2. FURNISH AND INSTALL ONE (1) NEW MS5 UNV I/O CARD TO EXISTING 4755-UCS0007.
3. FURNISH AND INSTALL NEW UCS NETWORK CONNECTIONS TO EXISTING AND NEW UCS UNV I/O PANELS PER UCS NETWORK INFRASTRUCTURE DETAILS, SHEET UCS21.
4. FURNISH AND INSTALL NEW UCS FIELD DEVICES, WIRING AND CONDUIT FOR NEW AIR HANDLERS PER NEW UCS WIRING DETAILS AND MECHANICAL CONTROL SCHEMATICS.
5. FURNISH AND INSTALL NEW UCS FIELD DEVICES, WIRING AND CONDUIT PER NEW UCS WIRING DETAILS.
6. FURNISH AND INSTALL MODBUS INTERFACE FOR DXAC0001 (MITSUBISHI "INTESIS BOX-ME-AC-MBS-1"). FURNISH AND INSTALL NEW UCS DATA CABLE PER NEW UCS COMM TRUNK LAYOUT.
7. FURNISH AND INSTALL NEW UCS VAV CONTROLS, FIELD DEVICES, WIRING AND CONDUIT PER UCS VAV DETAILS, COMM TRUNK LAYOUT AND MECHANICAL CONTROL SCHEMATICS.

ADD ALT.#2 UCS FLAG NOTES:

A2. FURNISH AND INSTALL NEW UCS FIELD DEVICES, WIRING AND CONDUIT FOR NEW ELECTRIC WATER HEATER PER NEW UCS WIRING DETAILS AND MECHANICAL CONTROL SCHEMATICS.

BUILDING 4755
FOURTH FLOOR UCS NEW WORK PLAN
SCALE: 1/8" = 1'-0"
0 4' 8' 12'

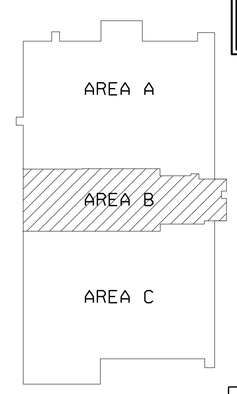

BUILDING 4755
KEY PLAN
NOT TO SCALE

WARNING
DO NOT SCALE THIS DRAWING
THIS DRAWING WAS DESIGNED TO BE PRINTED AT A NASA SHEET SIZE: MSFC STD. SIZE 40" X 28"

PRELIMINARY CADD DWG.
CHANGES TO THIS DRAWING SHALL BE MADE ON CADD ONLY.
3426839 02-06-13 DGB
LATEST CADD UPDATE: 10-24-13 3:30 PM
BY: DUSTIN BORDER

REV.	BY	DATE	REVISION	C.I. NO.	APPROVED

Marshall Space Flight Center
Huntsville, Alabama 35812

WORK REQUEST NO. 3426839

BUILDING 4755
HVAC RENOVATION
FOURTH FLOOR UCS NEW WORK PLAN

BASE BID & ALT.#2

AE FIRM: KAYA Associates, Inc.
NASA AE CONTRACT NO. NAS8- NNM11AA39C
SUBMITTED: APPROVAL RECOMMENDED: AD22 PROJECT A/E APPROVED:
AE: DATE: APPROVAL RECOMMENDED: AD22 SUPPORT A/E AB22 GROUP LEAD DATE:
DESIGNED D. BORDER
DRAWN D. BORDER
CHECKED J. PAGE
APPROVAL RECOMMENDED: KAYA Associates, Inc.
SCALE: AS NOTED
SPEC. NO. FAC M5057
DRAWING NO. FAC-DA-4755-UCS13
SHEET OF

SIGNATURES ON INDEX SHEET INDICATE ACCEPTANCE OF THIS SHEET
REF. NO. UCS13 OF 40

MSFC-FORM 232 REV. 8-21-89-RCL

N:*DesignProjects*4755*DA-Mech. CoF*UCS13.dgn

MSFC Master Bid Disk 03-26-2014

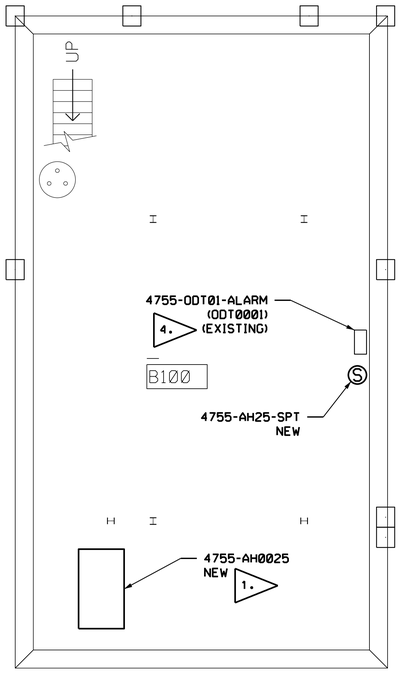

BUILDING 4755
BASEMENT UCS NEW WORK PLAN
SCALE: 3/16" = 1'-0"
0 2' 4' 6' 8'

UCS NEW FLAG NOTES:

1. FURNISH AND INSTALL NEW UCS FIELD DEVICES. WIRING AND CONDUIT FOR NEW AIR HANDLERS PER NEW UCS WIRING DETAILS AND MECHANICAL CONTROL SCHEMATICS.
2. FURNISH AND INSTALL TWO (2) NEW MS5 UNV I/O CARDS TO EXISTING 4755-UCS0005.
3. FURNISH AND INSTALL NEW UCS FIELD DEVICES. WIRING AND CONDUIT FOR NEW HOT AND CHILL WATER PUMPS PER NEW UCS WIRING DETAILS AND MECHANICAL CONTROL SCHEMATICS.
4. FURNISH AND INSTALL NEW UCS FIELD DEVICES. WIRING AND CONDUIT PER NEW UCS WIRING DETAILS.
5. FURNISH AND INSTALL NEW ONICON SYSTEM 10 BACNET MS/TP BTU METER (SK BTU4) AT LOCATION(S) SHOWN. INSTALLATION SHALL INCLUDE MATCHING TEMPERATURE SENSORS AND ELECTROMAGNETIC FLOW METER. INSERTION METER SHOWN. IF THERE IS INSUFFICIENT STRAIGHT RUN, ALLOW 80% OF THE RUN UPSTREAM AND 20% OF THE RUN DOWNSTREAM. IF THE TOTAL LENGTH OF STRAIGHT RUN IS LESS THAN 70% OF THE RECOMMENDED LENGTH, PERFORMANCE MAY SERIOUSLY DEGRADE, AND CONSIDERATION SHOULD BE GIVEN TO CHANGING TO THE SERIES F-3000 IN-LINE ELECTROMAGNETIC FLOW METER. FURNISH AND INSTALL NEW UCS DATA CABLE AND CONDUIT PER NEW UCS COMM TRUNK LAYOUT.
6. FURNISH AND INSTALL NEW UCS DATA CABLE PER NEW UCS COMM TRUNK LAYOUT.

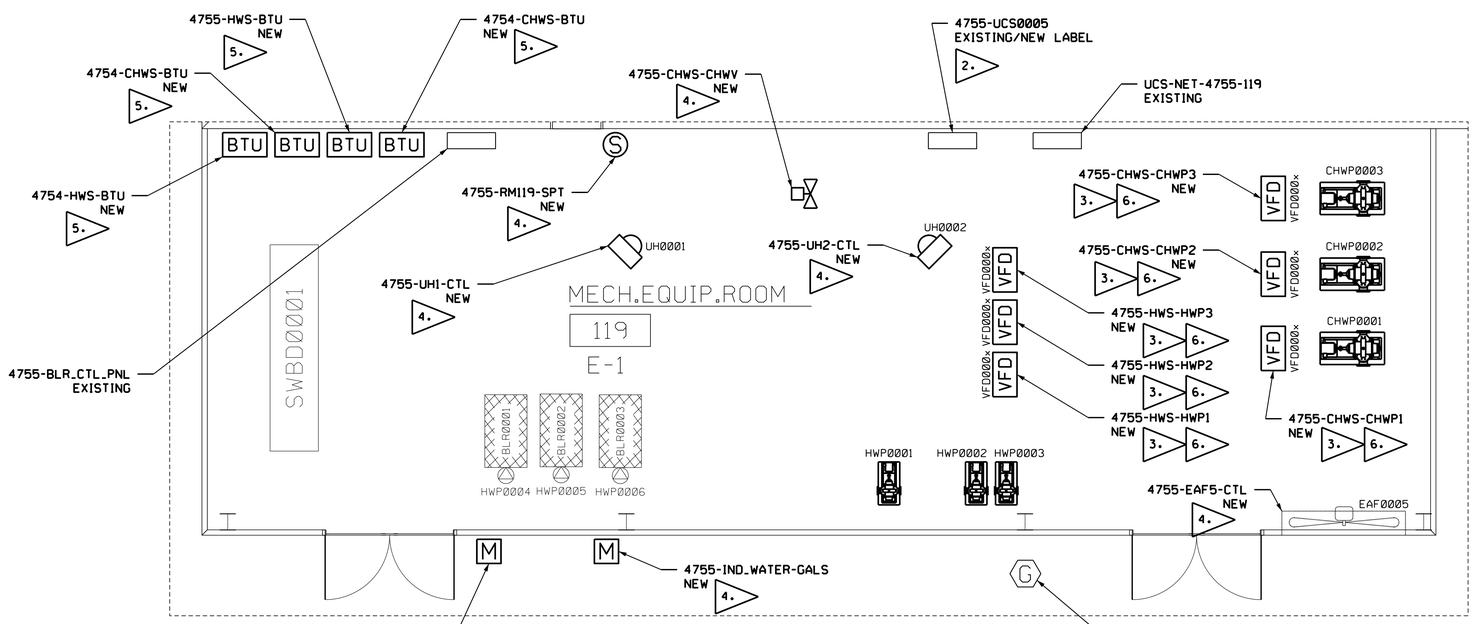

BUILDING 4755
ENLARGED ROOM 119/E-1 UCS NEW WORK PLAN
SCALE: 1/4" = 1'-0"
0 2' 4' 6'

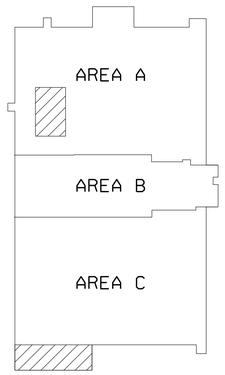

BUILDING 4755
KEY PLAN
NOT TO SCALE

WARNING
DO NOT SCALE THIS DRAWING
THIS DRAWING WAS DESIGNED TO BE PRINTED AT A NASA SHEET SIZE: MSFC STD. SIZE 40" X 28"

PRELIMINARY CADD DWG.
CHANGES TO THIS DRAWING SHALL BE MADE ON CADD ONLY.
3426839 02-06-13 DGB
LATEST CADD UPDATE: 10-24-13 3:30 PM
BY: DUSTIN BORDER

REV.	BY	DATE	REVISION	C.I. NO.	APPROVED

Marshall Space Flight Center
Huntsville, Alabama 35812

WORK REQUEST NO. 3426839

BUILDING 4755
HVAC RENOVATION
BASEMENT AND ENLARGED ROOM 119/E-1 UCS NEW PLAN

BASE BID

AE FIRM: KAYA Associates, Inc.
NASA AE CONTRACT NO. NAS8- NNM11AA39C
SUBMITTED: APPROVAL RECOMMENDED: AD22 PROJECT A/E
APPROVED:
AE: DATE: APPROVAL RECOMMENDED: AD22 SUPPORT A/E
AB22 GROUP LEAD DATE:
DESIGNED D. BORDER
DRAWN D. BORDER
CHECKED J. PAGE
APPROVAL RECOMMENDED: KAYA Associates, Inc.
SCALE: AS NOTED
SPEC. NO. FAC M5057
DRAWING NO. FAC-DA-4755-UCS14
SHEET OF

SIGNATURES ON INDEX SHEET INDICATE ACCEPTANCE OF THIS SHEET
REF. NO. UCS14 OF 40

MSFC-FORM 232 REV.8-21-89-RCL

N:*DesignProjects*4755*DA-Mech. CoF*UCS14.dgn

MSFC Master Bid Disk 03-26-2014

FID01 DEMO SCHEDULE

TU PANEL	UCS POINT NAME	I/O POINT TYPE	REMOVE UCS FIELD DEVICE	UCS FIELD DEVICE TO REMAIN	REMOVE UCS WIRING	REMOVE ABANDONED CONDUIT	REMOVE I/O POINT	RELOCATE I/O POINT	RE-LABEL I/O POINT	I/O RELOCATES TO:	RE-LABEL AS:
4755-TU:NHB1 REMOVE	4755-NHB2-SAF	DO	X		X	X	X				
	4755-RM100N_NHB-SPT	AI	X		X	X	X				
	4755-RM100N-RH	AI	X		X	X	X				
	4755-RM100W-RH	AI	X		X	X	X				
	4755-AH26-SAF	DI	X		X	X	X				
	4755-RM100W_NHB-SPT	AI	X		X	X	X				
	4755-AH21-SAF	DI	X		X	X		X		4755-UCS0001	
	4755-AH24-SAF	DI	X		X	X		X		4755-UCS0001	
	4755-AH25-SAF	DI	X		X	X		X		4755-UCS0002	
	4755-CRIT2-PWR	DI	X		X	X		X	X	4755-UCS0001	4755-ATS2-LOAD
	4755-BLDG2-PWR	DI	X		X	X		X	X	4755-UCS0001	4755-ATS2-NORM_PWR
	4755-GEN2-ST	DI	X		X	X		X	X	4755-UCS0001	4755-ATS2-GEN2
	4755-CHWS-DPT2	AI	X		X	X		X		4755-UCS0001	
4755-TU:NHB2 REMOVE	4755-NHB1-SAF	DO	X		X	X	X				
	4755-RM100SE_NHB-SPT	AI	X		X	X	X				
	4755-RM100SE-RH	AI	X		X	X	X				
	4755-AH16-SAF	DI	X		X	X		X		4755-UCS0002	
	4755-AH17-SAF	DI	X		X	X		X		4755-UCS0002	
	4755-DXAC1-SAF	DI	X		X	X	X				
4755-TU:SHB1 REMOVE	4755-AH8-SAF	DI	X		X	X		X		4755-UCS0003	
	4755-SHB2-SAF	DO	X		X	X	X				
	4755-AH18-SAF	DI	X		X	X		X		4755-UCS0002	
	4755-AH18-SAF	DO	X		X	X		X		4755-UCS0002	
	4755-AH18-RAT	AI	X		X	X		X		4755-UCS0002	
	4755-AH18-SAT	AI	X		X	X		X		4755-UCS0002	
	4755-AH18-MXAT	AI	X		X	X		X		4755-UCS0002	
	4755-AH18-STATIC	AI	X		X	X		X	X	4755-UCS0002	4755-AH18-DUCT_STATIC
	4755-AH18-MOACFM	AI	X		X	X		X	X	4755-UCS0002	4755-AH18-OA_CFM
	4755-AH18-CHWV	AO	X		X	X		X		4755-UCS0002	
	4755-AH18-HWV	AO	X		X	X		X		4755-UCS0002	
	4755-AH18-VDAM	AO	X		X	X	X				
	4755-AH18-OAD	AO	X		X	X	X				
	4755-AH18-RAD	AO	X		X	X		X		4755-UCS0002	
	4755-AH18-MOAD	AO	X		X	X	X				
	4755-AH10-RAT	AI	X		X	X		X		4755-UCS0003	
	4755-AH10-SAF	DI	X		X	X		X		4755-UCS0003	
	4755-AH11-SAF	DI	X		X	X		X		4755-UCS0003	
	4755-AH12-RAT	AI	X		X	X		X		4755-UCS0003	
	4755-AH12-SAF	DI	X		X	X		X		4755-UCS0003	
	4755-AH13-SAF	DI	X		X	X		X		4755-UCS0003	
	4755-CHWS-DPT1	AI	X		X	X		X		4755-UCS0003	
4755-TU:E1 REMOVE	4755-CHWP1-AUTO_MODE	DI	X		X	X	X				
	4755-CHWS-CHWP1	DI	X		X	X		X		4755-UCS0005	
	4755-CHWS-CHWP1	DO	X		X	X		X		4755-UCS0005	
	4755-CHWS-VSPS1	AI	X		X	X	X				
	4755-CHWS-VSPS1	AO	X		X	X		X	X	4755-UCS0005	4755-CHWS-CHWP1_VFD
	4755-CHWP2-AUTO_MODE	DI	X		X	X	X				
	4755-CHWS-CHWP2	DI	X		X	X		X		4755-UCS0005	
	4755-CHWS-CHWP2	DO	X		X	X		X		4755-UCS0005	
	4755-CHWS-VSPS2	AI	X		X	X	X				
	4755-CHWS-VSPS2	AO	X		X	X		X	X	4755-UCS0005	4755-CHWS-CHWP2_VFD
	4755-CHWS-SBPMP1	DI	X		X	X	X				
	4755-CHWS-SBPMP1	DO	X		X	X	X				
	4755-CHWS-GPM	AI	X		X	X	X				
	4755-CHWS-CHWST	AI	X		X	X	X				
	4755-CHWS-CHWRT	AI	X		X	X	X				
	4755-CHWS-CHWV	AO	X		X	X		X		4755-UCS0005	
	4754-CHWS-GPM	AI	X		X	X	X				
	4754-CHWS-CHWST	AI	X		X	X	X				
	4754-CHWS-CHWRT	AI	X		X	X	X				
	4754-CHWS-DPT1	AI	X		X	X		X		4754-UCS0001	
	4755-CHWS-LOOPD_PSI	AI	X		X	X		X		4755-UCS0005	
	4755-SHB1-SAF	DO	X		X	X	X				
	4755-AH2-SAF	DI	X		X	X		X		4755-UCS0004	
	4755-AH3-SAF	DI	X		X	X		X		4755-UCS0004	
	4755-AH4-SAF	DI	X		X	X		X		4755-UCS0004	
	4755-AH5-SAF	DI	X		X	X		X		4755-UCS0004	
	4755-AH6-SAF	DI	X		X	X		X		4755-UCS0004	
	4755-AH7-SAF	DI	X		X	X		X		4755-UCS0004	

FID01 DEMO SCHEDULE

TU PANEL	UCS POINT NAME	I/O POINT TYPE	REMOVE UCS FIELD DEVICE	UCS FIELD DEVICE TO REMAIN	REMOVE UCS WIRING	REMOVE ABANDONED CONDUIT	REMOVE I/O POINT	RELOCATE I/O POINT	RELABEL I/O POINT	I/O RELOCATES TO:	RE-LABEL AS:
4755-TU:FL4 REMOVE	4755-DXAC3-SAF	DI	X		X	X	X				
	4755-DXAC3-SAF	DO	X		X	X	X				
	4755-DXAC3-SPT	AI	X		X	X	X				
	4755-AH40-SAF	DI	X		X	X		X		4755-UCS0007	
	4755-AH40-SAF	DO	X		X	X		X		4755-UCS0007	
	4755-AH40-SAT	AI	X		X	X		X		4755-UCS0007	
	4755-AH40-RAT	AI	X		X	X		X		4755-UCS0007	
	4755-AH40-SPT	AI	X		X	X	X				
	4755-AH41-SAF	DI	X		X	X	X				
	4755-AH41-SAF	DO	X		X	X	X				
	4755-AH41-SPT	AI	X		X	X	X				
	4755-AH42-SAF	DI	X		X	X	X				
	4755-AH42-SAF	DO	X		X	X	X				
	4755-AH42-SAT	AI	X		X	X	X				
	4755-AH42-RAT	AI	X		X	X	X				
	4755-ELEV-SPT	AI	X		X	X		X		4755-UCS0006	
	4755-CHWS-DPT3	AI	X		X	X		X		4755-UCS0006	
	4755-CB1-PWR	DI	X		X	X	X				
4755-TU:E5 REMOVE	4755-CRIT1-PWR	DI	X		X	X		X	X	4755-UCS0003	4755-ATS1-LOAD
	4755-BLDG1-PWR	DI	X		X	X		X	X	4755-UCS0003	4755-ATS1-NORM_PWR
	4755-GEN1-ST	DI	X		X	X		X	X	4755-UCS0003	4755-ATS1-GEN1
4754-TU:1 REMOVE	4754-KW1-KWD	AI		X	X	X	X				
	4754-KW1-KWH	DI		X	X	X	X				
4755-FID01 REMOVE	4755-FID01-PWRFL	DI	X		X	X	X				
	4755-FID01-DCVOLT	AI	X		X	X	X				
	4755-ODT01-ALARM	DI	X		X	X		X		4755-UCS0002	
	4755-PRKNG_LOT-LGHTS_E	DI	X		X	X		X		4755-UCS0003	
	4755-PRKNG_LOT-LGHTS_E	DO	X		X	X		X		4755-UCS0003	

DEMO SCHEDULE TABLE KEY

"REMOVE UCS FIELD DEVICE"

REMOVE EXISTING UCS FIELD DEVICE. NOT TO BE RE-INSTALLED.

"UCS FIELD DEVICE TO REMAIN"

EXISTING UCS FIELD DEVICE TO BE REUSED AND/OR REINSTALLED.

"REMOVE UCS WIRING"

REMOVE EXISTING UCS WIRING FROM UCS PANEL TO FIELD DEVICE.

"REMOVE ABANDONED CONDUIT"

REMOVE ABANDONED CONDUIT, PULL BOXES, HANGERS AND SUPPORTS.

"REMOVE I/O POINT"

REMOVE EXISTING I/O POINT FROM THE INFOSCAN DATABASE. COORDINATE REMOVAL WITH UCS PERSONNEL.

"RELOCATE I/O POINT"

RELOCATE I/O POINT TO NEW UCS PANEL SPECIFIED, SEE NEW UCS WIRING DETAILS.

"RELABEL POINT"

RELABEL EXISTING I/O POINT AS SHOWN AND PER NEW UCS WIRING DETAILS.

WARNING

DO NOT SCALE THIS DRAWING

THIS DRAWING WAS DESIGNED TO BE PRINTED AT A NASA SHEET SIZE: MSFC STD. SIZE 40" X 28"

PRELIMINARY CADD DWG.

CHANGES TO THIS DRAWING SHALL BE MADE ON CADD ONLY.

3426839 02-06-13 DGB

LATEST CADD UPDATE: 10-24-13 3:30 PM

BY: DUSTIN BORDER

REV.	BY	DATE	REVISION	C.N. NO.	APPROVED

Marshall Space Flight Center
Huntsville, Alabama 35812

WORK REQUEST NO. 3426839

BUILDING 4755

HVAC RENOVATION

UCS FID01 DEMO SCHEDULE

BASE BID

SIGNATURES ON INDEX SHEET INDICATE ACCEPTANCE OF THIS SHEET

REF. NO. UCS15 OF 40

AE FIRM: KAYA Associates, Inc.

NASA AE CONTRACT NO. NAS8- NNM11AA39C

SUBMITTED: APPROVAL RECOMMENDED: AD22 PROJECT A/E APPROVED:

AE: DATE: APPROVAL RECOMMENDED: AD22 SUPPORT A/E AB22 GROUP LEAD DATE:

DESIGNED D. BORDER
DRAWN D. BORDER
CHECKED J. PAGE

APPROVAL RECOMMENDED: KAYA Associates, Inc.

DRAWING NO. FAC-DA-4755-UCS15

SCALE: AS NOTED SPEC. NO. FAC M5057 SHEET OF

MSFC-FORM 232 REV. 8-21-89-RCL

N:*DesignProjects*4755*DA-Mech. CoF*UCS15.dgn

MSFC Master Bid Disk 03-26-2014

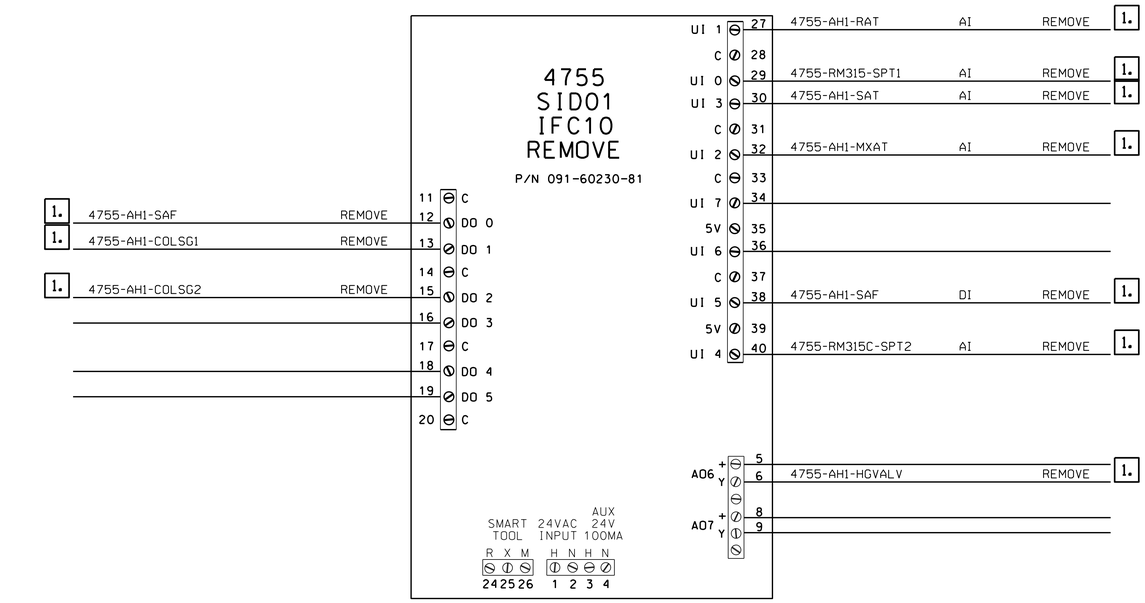

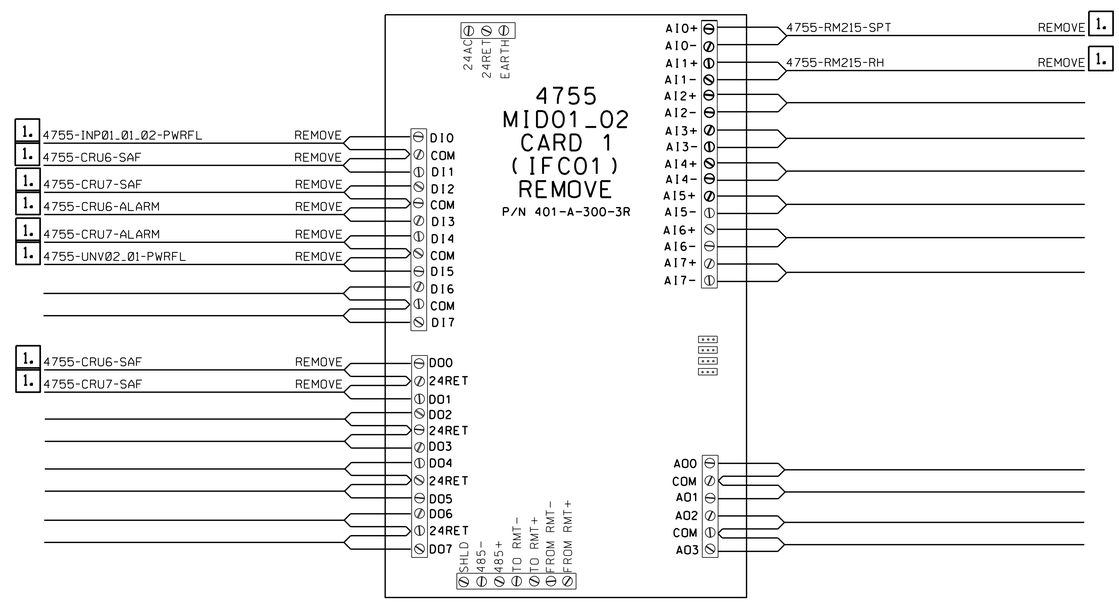

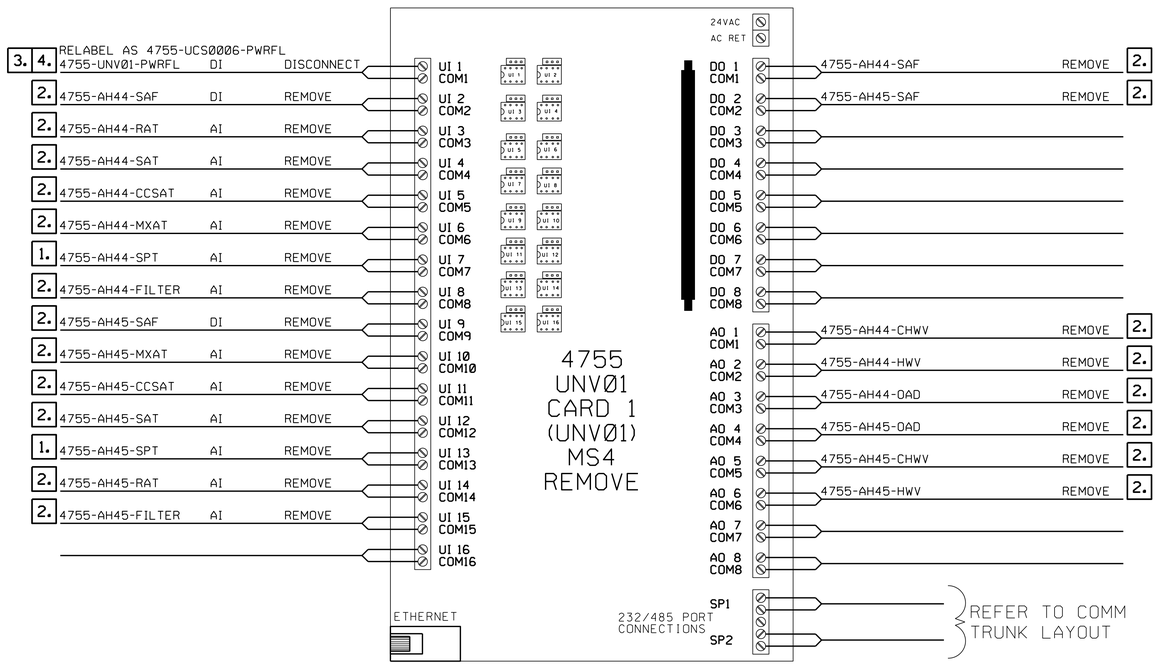

NOTES:

1. REMOVE EXISTING UCS I/O POINT, FIELD DEVICE, WIRING AND ABANDONED CONDUIT.
2. REMOVE EXISTING UCS FIELD DEVICE, WIRING AND ABANDONED CONDUIT. EXISTING I/O POINT SHALL REMAIN FOR RE-USE PER NEW UCS WIRING DETAILS.
3. DISCONNECT UCS WIRING TO ACCOMMODATE NEW I/O CARD INSTALLATION. EXISTING I/O POINT, WIRING AND FIELD DEVICE TO REMAIN FOR RE-USE.
4. RELABEL EXISTING I/O POINT AS SHOWN AND PER NEW UCS WIRING DETAILS.

WARNING

DO NOT SCALE THIS DRAWING

THIS DRAWING WAS DESIGNED TO BE PRINTED AT A NASA SHEET SIZE: MSFC STD. SIZE 40" X 28"

PRELIMINARY CADD DWG.

CHANGES TO THIS DRAWING SHALL BE MADE ON CADD ONLY.

3426839 02-06-13 DGB

LATEST CADD UPDATE: 10-24-13 3:30 PM BY: DUSTIN BORDER

REV.	BY	DATE	REVISION	C.I. NO.	APPROVED

Marshall Space Flight Center
Huntsville, Alabama 35812

WORK REQUEST NO. 3426839

BUILDING 4755

HVAC RENOVATION

UCS DEMO WIRING DETAILS

BASE BID

AE FIRM: KAYA Associates, Inc.

NASA AE CONTRACT NO. NAS8- NNM11AA39C

SUBMITTED: APPROVAL RECOMMENDED: AD22 PROJECT A/E APPROVED:

AE: DATE: APPROVAL RECOMMENDED: AD22 SUPPORT A/E AD22 GROUP LEAD DATE:

DESIGNED D. BORDER
DRAWN D. BORDER
CHECKED J. PAGE

APPROVAL RECOMMENDED: KAYA Associates, Inc.

SCALE: AS NOTED SPEC. NO. FAC M5057

SIGNATURES ON INDEX SHEET INDICATE ACCEPTANCE OF THIS SHEET

REF. NO. UCS16 OF 40

DRAWING NO. FAC-DA-4755-UCS16

SHEET OF

MSFC-FORM 232 REV. 8-21-89-RCL

N:*DesignProjects*4755*DA-Mech. CoF*UCS16.dgn

MSFC Master Bid Disk 03-26-2014

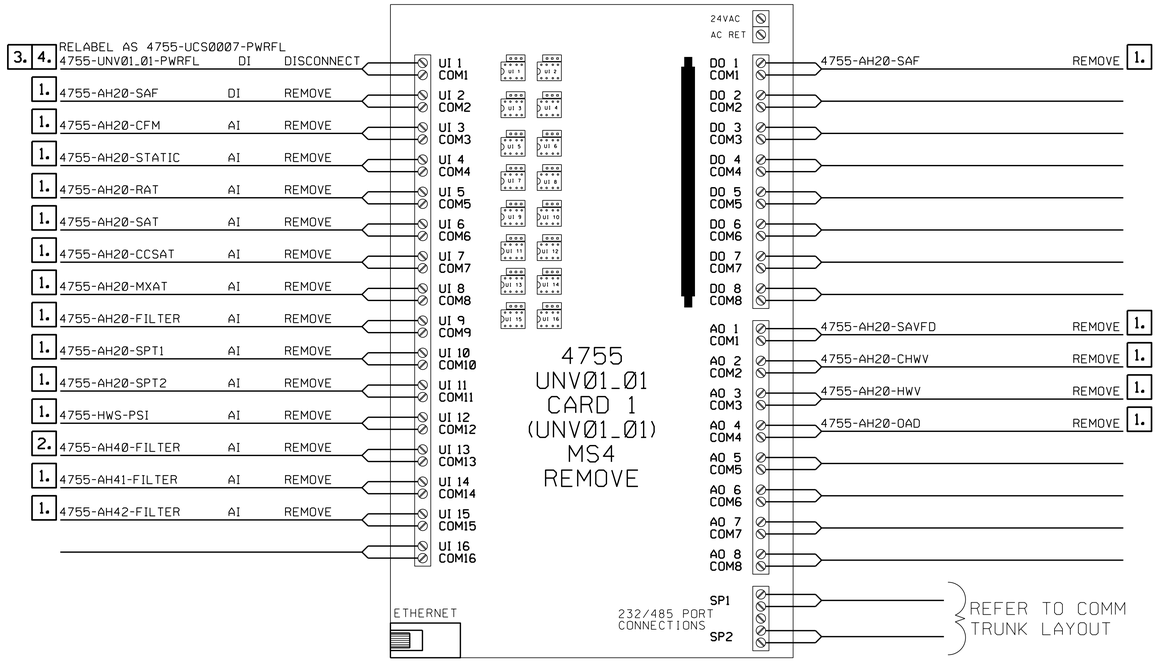

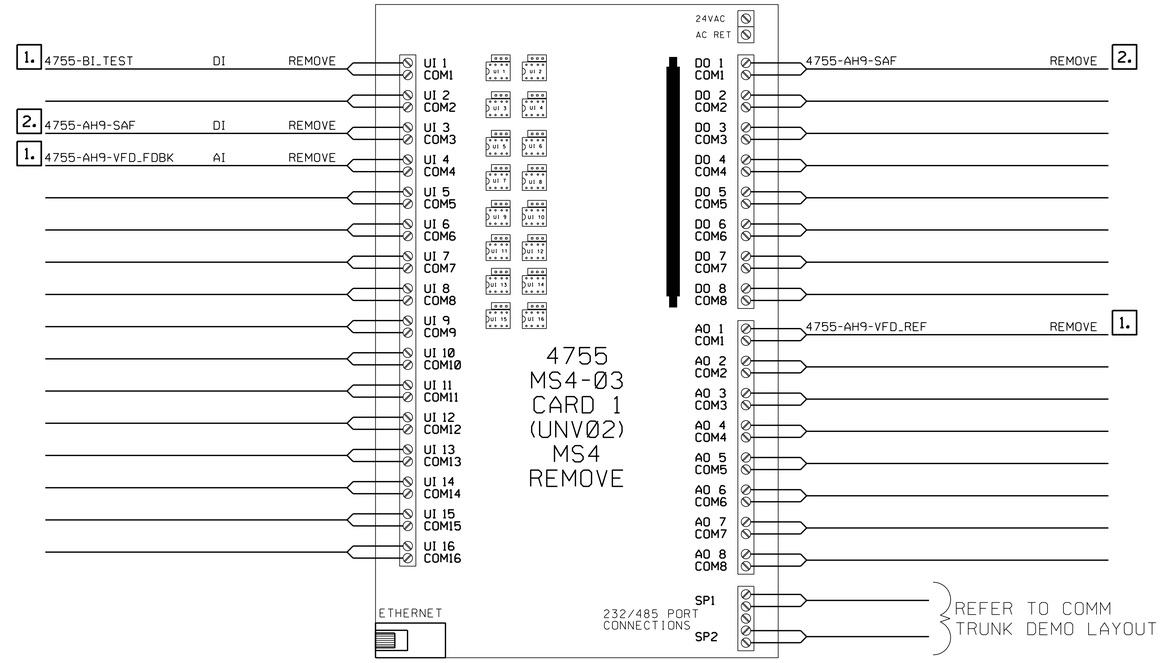

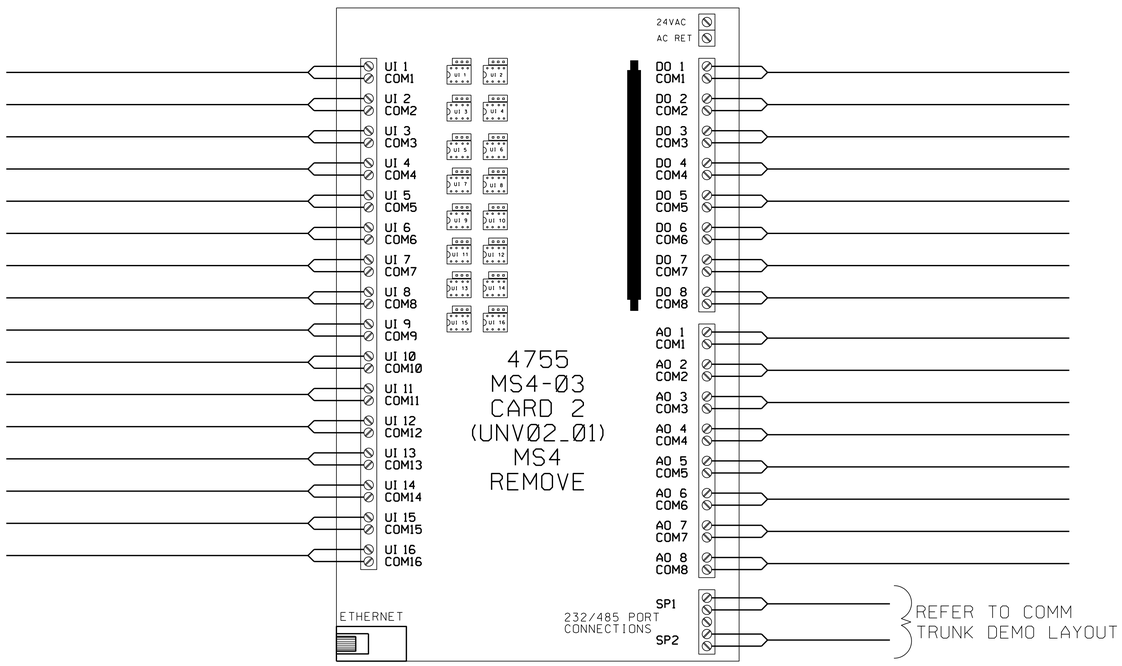

NOTES:

1. REMOVE EXISTING UCS I/O POINT, FIELD DEVICE, WIRING AND ABANDONED CONDUIT.
2. REMOVE EXISTING UCS FIELD DEVICE, WIRING AND ABANDONED CONDUIT. EXISTING I/O POINT SHALL REMAIN FOR RE-USE PER NEW UCS WIRING DETAILS.
3. DISCONNECT UCS WIRING TO ACCOMMODATE NEW I/O CARD INSTALLATION. EXISTING I/O POINT, WIRING AND FIELD DEVICE TO REMAIN FOR RE-USE.
4. RELABEL EXISTING I/O POINT AS SHOWN AND PER NEW UCS WIRING DETAILS.

WARNING

DO NOT SCALE THIS DRAWING

THIS DRAWING WAS DESIGNED TO BE PRINTED AT A NASA SHEET SIZE: MSFC STD. SIZE 40" X 28"

PRELIMINARY CADD DWG.

CHANGES TO THIS DRAWING SHALL BE MADE ON CADD ONLY.

3426839 02-06-13 DGB

LATEST CADD UPDATE: 10-24-13 3:30 PM BY: DUSTIN BORDER

REV.	BY	DATE	REVISION	C.I. NO.	APPROVED

Marshall Space Flight Center
Huntsville, Alabama 35812

WORK REQUEST NO. 3426839

BUILDING 4755

HVAC RENOVATION

UCS DEMO WIRING DETAILS

BASE BID

AE FIRM: KAYA Associates, Inc.

NASA AE CONTRACT NO. NASA- NNM11AA39C

SUBMITTED: | APPROVAL RECOMMENDED: AD22 PROJECT A/E | APPROVED:

AE: DATE: | APPROVAL RECOMMENDED: AD22 SUPPORT A/E | AD22 GROUP LEAD DATE:

DESIGNED D. BORDER
DRAWN D. BORDER
CHECKED J. PAGE

APPROVAL RECOMMENDED: KAYA Associates, Inc.

SCALE: AS NOTED SPEC. NO. FAC M5057

SIGNATURES ON INDEX SHEET INDICATE ACCEPTANCE OF THIS SHEET

REF. NO. UCS17 OF 40

DRAWING NO. FAC-DA-4755-UCS17

SHEET OF

MSFC-FORM 232 REV. 8-21-89-RCL

N:*DesignProjects*4755*DA-Mech. CoF*UCS17.dgn

MSFC Master Bid Disk 03-26-2014

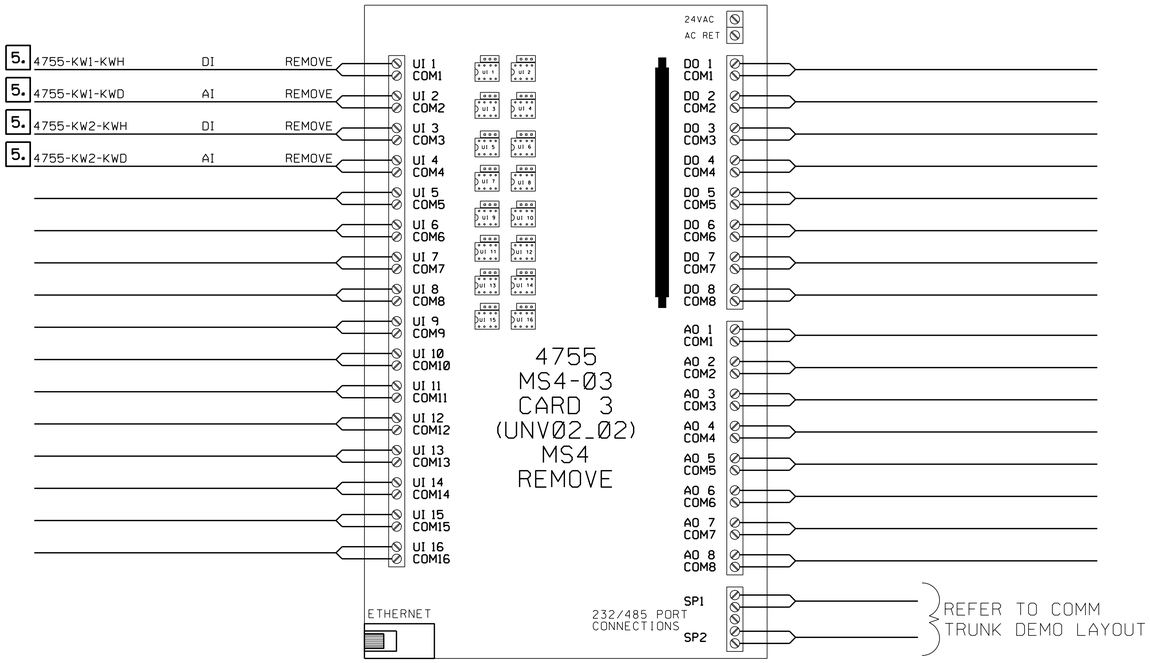

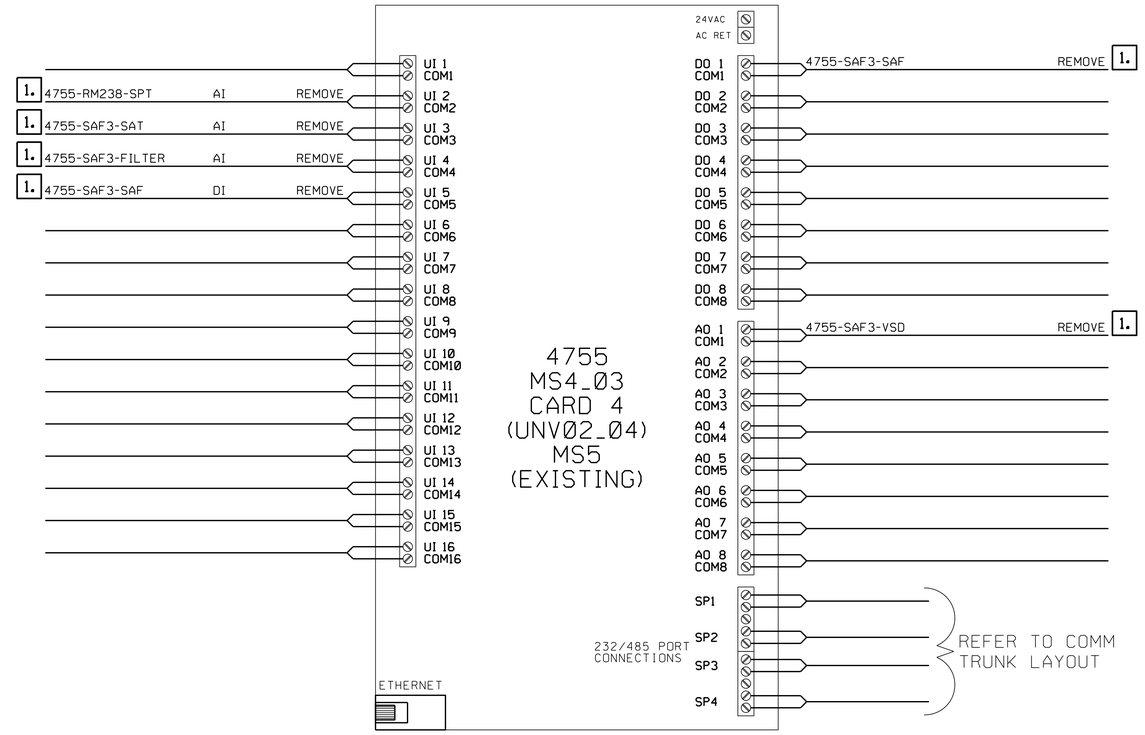

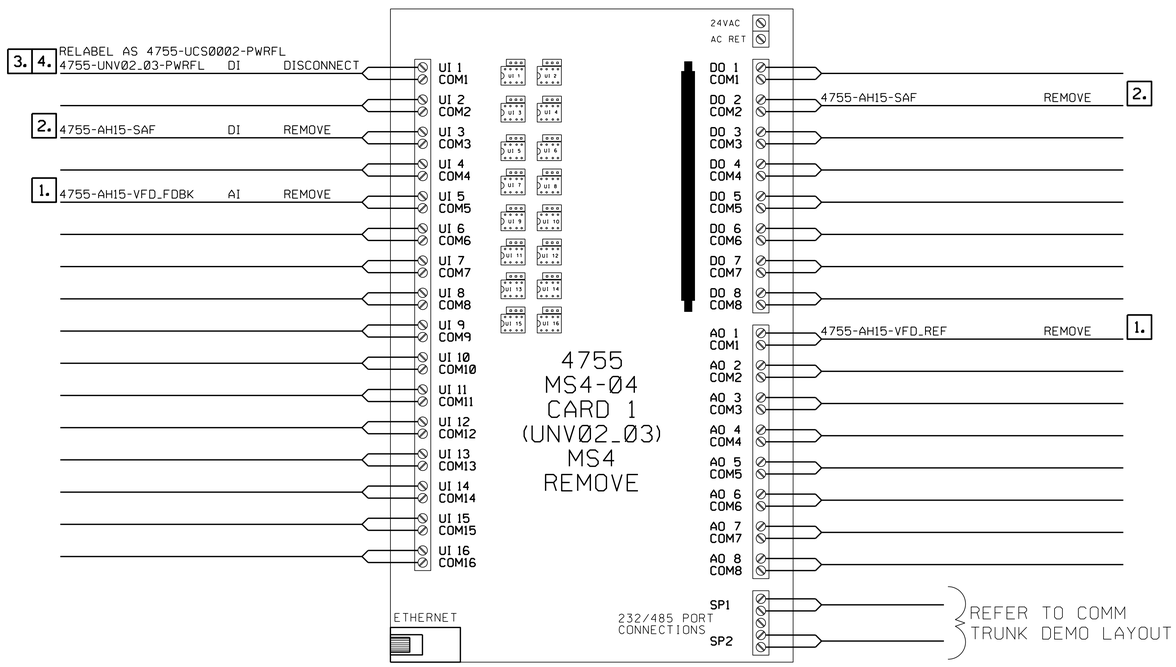

NOTES:

1. REMOVE EXISTING UCS I/O POINT, FIELD DEVICE, WIRING AND ABANDONED CONDUIT.
2. REMOVE EXISTING UCS FIELD DEVICE, WIRING AND ABANDONED CONDUIT. EXISTING I/O POINT SHALL REMAIN FOR RE-USE PER NEW UCS WIRING DETAILS.
3. DISCONNECT UCS WIRING TO ACCOMMODATE NEW I/O CARD INSTALLATION. EXISTING I/O POINT, WIRING AND FIELD DEVICE TO REMAIN FOR RE-USE.
4. RELABEL EXISTING I/O POINT AS SHOWN AND PER NEW UCS WIRING DETAILS.
5. REMOVE EXISTING UCS I/O POINT, WIRING AND ABANDONED CONDUIT. EXISTING FIELD DEVICE TO REMAIN.

WARNING

DO NOT SCALE THIS DRAWING

THIS DRAWING WAS DESIGNED TO BE PRINTED AT A NASA SHEET SIZE: MSFC STD. SIZE 40" X 28"

PRELIMINARY CADD DWG.

CHANGES TO THIS DRAWING SHALL BE MADE ON CADD ONLY.

3426839 02-06-13 DGB

LATEST CADD UPDATE: 10-24-13 3:30 PM

BY: DUSTIN BORDER

REV.	BY	DATE	REVISION	C.I. NO.	APPROVED

Marshall Space Flight Center
Huntsville, Alabama 35812

WORK REQUEST NO. 3426839

BUILDING 4755

HVAC RENOVATION

UCS DEMO WIRING DETAILS

BASE BID

AE FIRM: KAYA Associates, Inc.

NASA AE CONTRACT NO. NAS8- NNM11AA39C

SUBMITTED: APPROVAL RECOMMENDED: AD22 PROJECT A/E APPROVED:

AE: DATE: APPROVAL RECOMMENDED: AD22 SUPPORT A/E AB22 GROUP LEAD DATE:

DESIGNED D. BORDER
DRAWN D. BORDER
CHECKED J. PAGE

APPROVAL RECOMMENDED: KAYA Associates, Inc.

SCALE: AS NOTED SPEC. NO. FAC M5057

DRAWING NO. FAC-DA-4755-UCS18 SHEET OF

SIGNATURES ON INDEX SHEET INDICATE ACCEPTANCE OF THIS SHEET

REF. NO. UCS18 OF 40

MSFC-FORM 232 REV. 8-21-89-REL

N:\DesignProjects\4755\DA-Mech. CoF\UCS18.dgn

MSFC Master Bid Disk 03-26-2014

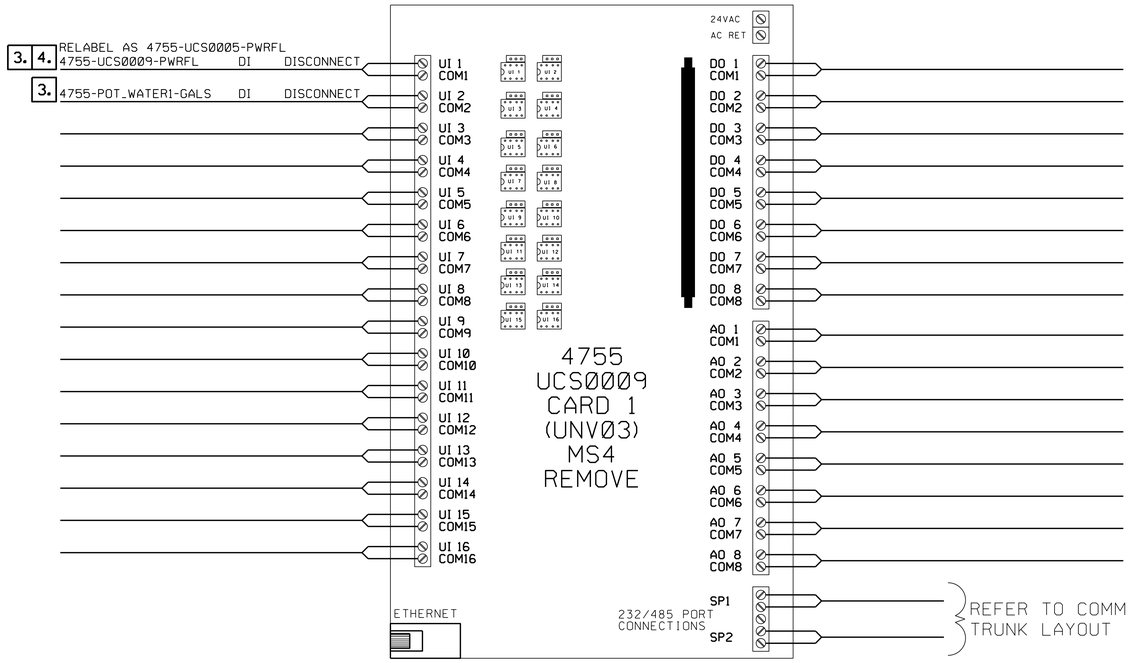

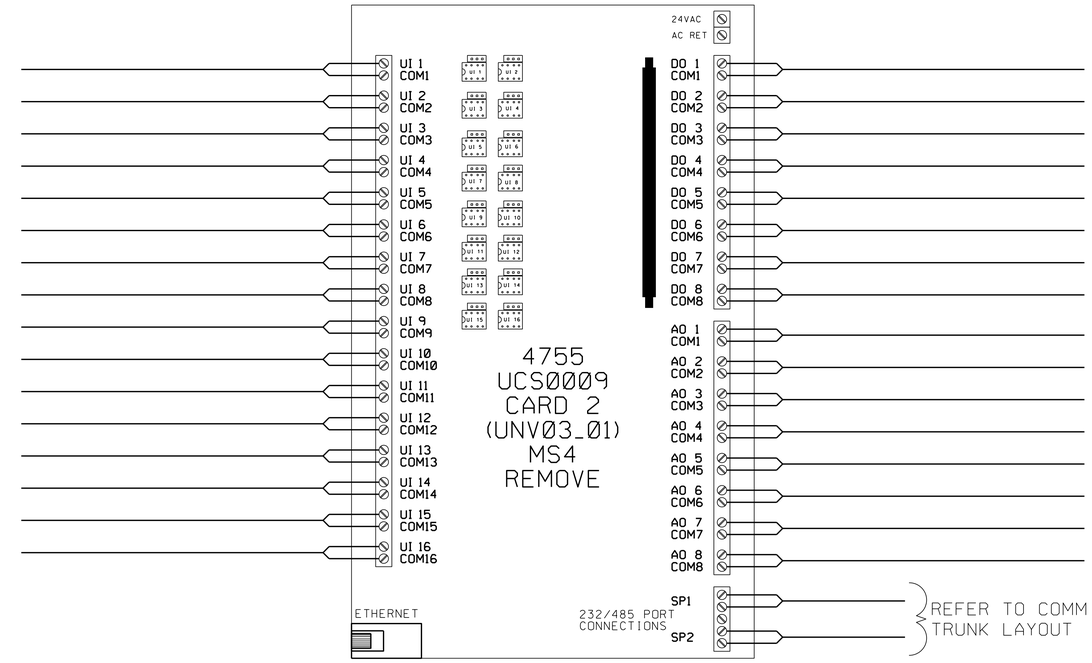

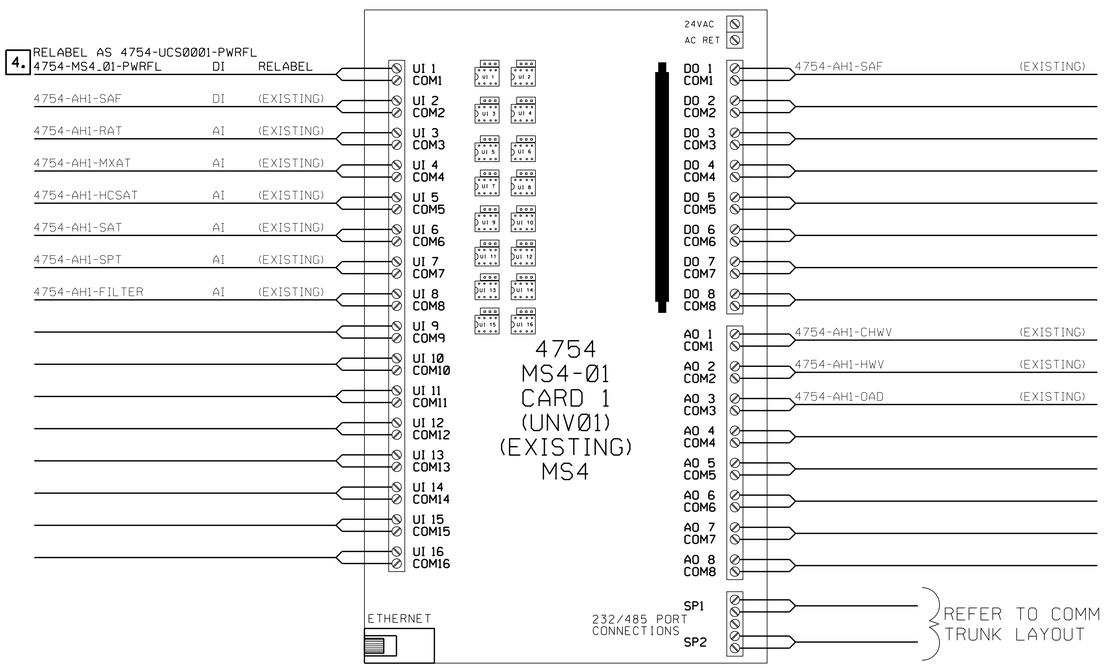

NOTES:

1. NOT USED.
2. NOT USED.
3. DISCONNECT UCS WIRING TO ACCOMMODATE NEW I/O CARD INSTALLATION. EXISTING I/O POINT, WIRING AND FIELD DEVICE TO REMAIN FOR RE-USE.
4. RELABEL EXISTING I/O POINT AS SHOWN AND PER NEW UCS WIRING DETAILS.

WARNING

DO NOT SCALE THIS DRAWING

THIS DRAWING WAS DESIGNED TO BE PRINTED AT A NASA SHEET SIZE: MSFC STD. SIZE 40" X 28"

PRELIMINARY CADD DWG.

CHANGES TO THIS DRAWING SHALL BE MADE ON CADD ONLY.

3426839 02-06-13 DGB

LATEST CADD UPDATE: 10-24-13 3:30 PM

BY: DUSTIN BORDER

REV.	BY	DATE	REVISION	C.I. NO.	APPROVED

Marshall Space Flight Center
Huntsville, Alabama 35812

WORK REQUEST NO. 3426839

BUILDING 4755

HVAC RENOVATION

UCS DEMO WRING DETAILS

BASE BID

AE FIRM: KAYA Associates, Inc.

NASA AE CONTRACT NO. NAS8- NNM11AA39C

SUBMITTED: APPROVAL RECOMMENDED: AD22 PROJECT A/E APPROVED:

AE: DATE: APPROVAL RECOMMENDED: AD22 SUPPORT A/E AB22 GROUP LEAD DATE:

DESIGNED D. BORDER
DRAWN D. BORDER
CHECKED J. PAGE

APPROVAL RECOMMENDED: KAYA Associates, Inc.

SCALE: AS NOTED SPEC. NO. FAC M5057

DRAWING NO. FAC-DA-4755-UCS19

SHEET OF

SIGNATURES ON INDEX SHEET INDICATE ACCEPTANCE OF THIS SHEET

REF. NO. UCS19 OF 40

MSFC-FORM 232 REV. 8-21-89-REL

N:\DesignProjects\4755\DA-Mech. CoF\UCS19.dgn

MSFC Master Bid Disk 03-26-2014

UCS COMM TRUNK DEMO LAYOUT

• REMOVE SHADED I/O CARDS, PANELS, DATA CABLES AND CONDUIT•

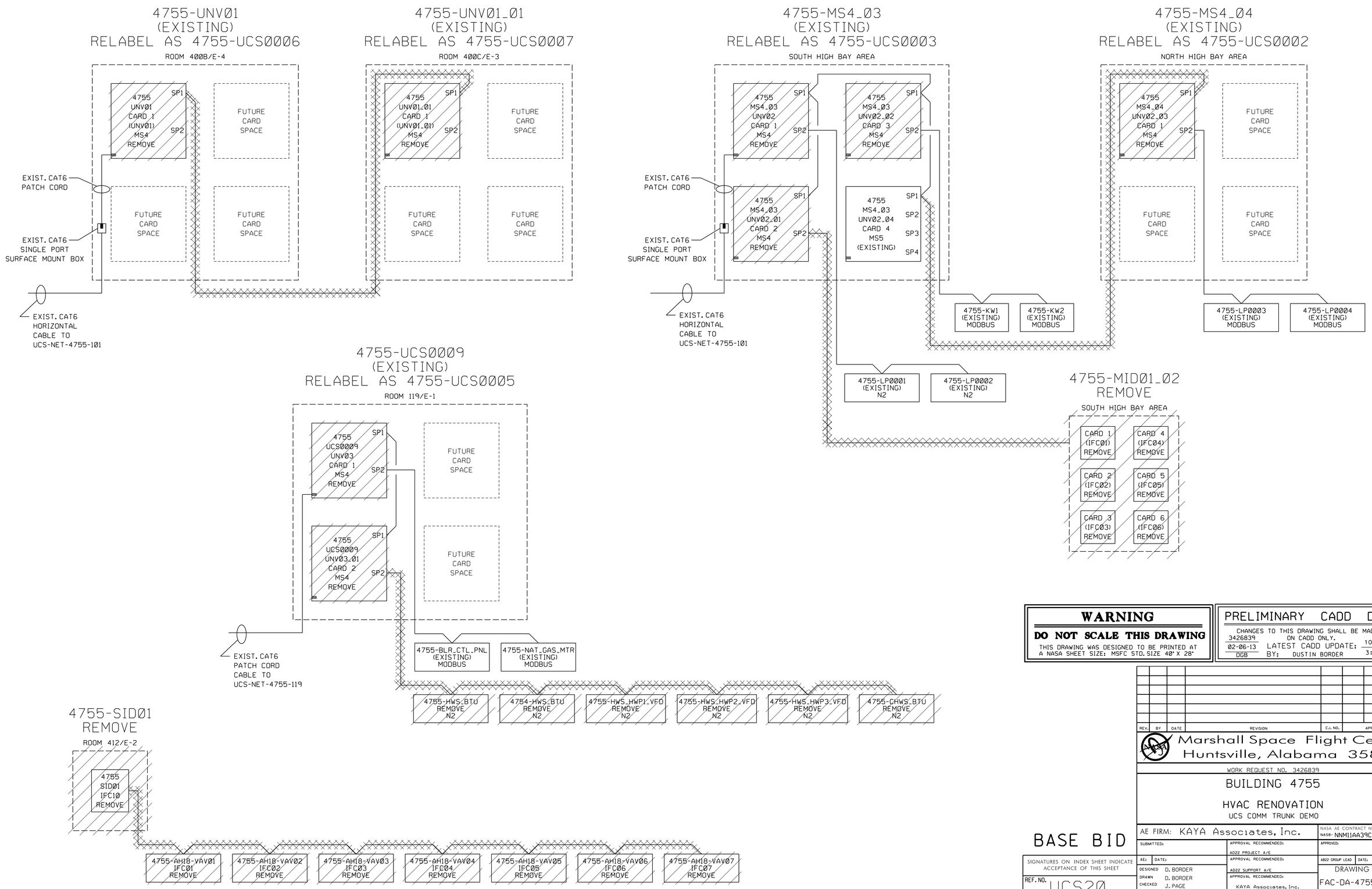

WARNING

DO NOT SCALE THIS DRAWING

THIS DRAWING WAS DESIGNED TO BE PRINTED AT A NASA SHEET SIZE: MSFC STD. SIZE 40" X 28"

PRELIMINARY CADD DWG.

CHANGES TO THIS DRAWING SHALL BE MADE ON CADD ONLY.

3426839 02-06-13 DGB

LATEST CADD UPDATE: 10-24-13 3:30 PM

BY: DUSTIN BORDER

REV.	BY	DATE	REVISION	C.I. NO.	APPROVED

Marshall Space Flight Center
Huntsville, Alabama 35812

WORK REQUEST NO. 3426839

BUILDING 4755

HVAC RENOVATION

UCS COMM TRUNK DEMO

BASE BID

AE FIRM: KAYA Associates, Inc.

NASA AE CONTRACT NO. NASS- NNM11AA39C

SUBMITTED: | APPROVAL RECOMMENDED: AD22 PROJECT A/E | APPROVED:

AE: | DATE: | APPROVAL RECOMMENDED: AD22 SUPPORT A/E | AD22 GROUP LEAD | DATE:

DESIGNED D. BORDER
DRAWN D. BORDER
CHECKED J. PAGE

APPROVAL RECOMMENDED: KAYA Associates, Inc.

SCALE: AS NOTED | SPEC. NO. FAC M5057

DRAWING NO. FAC-DA-4755-UCS20

SHEET OF

SIGNATURES ON INDEX SHEET INDICATE ACCEPTANCE OF THIS SHEET

REF. NO. UCS20 OF 40

MSFC-FORM 232 REV. 8-21-89-RCL

N:*DesignProjects*4755*DA-Mech. CoF*UCS20.dgn

MSFC Master Bid Disk 03-26-2014

UCS NETWORK INFRASTRUCTURE

UCS NETWORK SINGLE LINE - DEMO

* REMOVE ALL SHADED ITEMS *

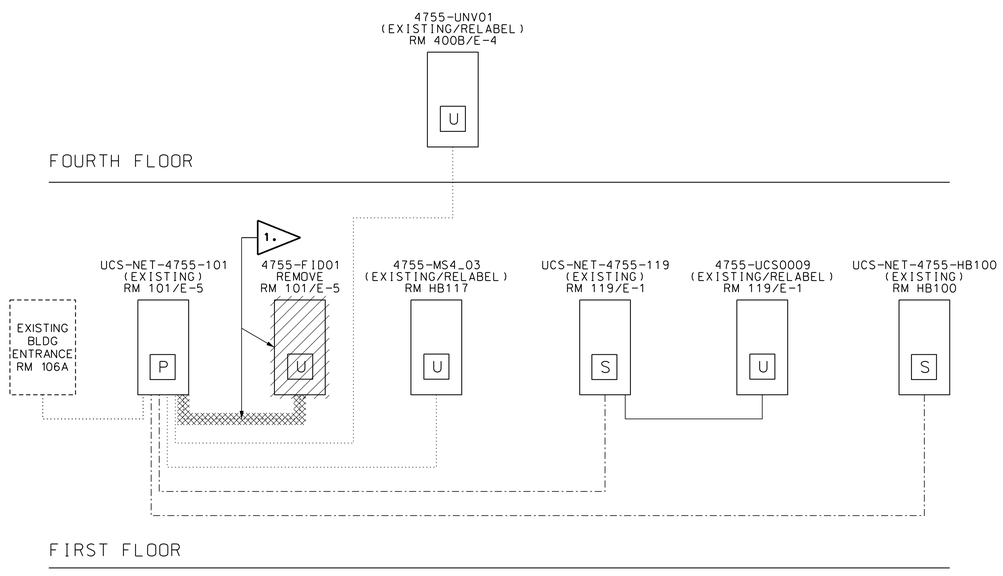

UCS NETWORK WIRING LEGEND

- EXISTING SINGLE MODE FIBER OPTIC CABLE
- EXISTING CATEGORY 6 HORIZONTAL CABLE
- NEW CATEGORY 6 HORIZONTAL CABLE
- EXISTING CATEGORY 6 PATCH CORD
- NEW CATEGORY 6 PATCH CORD
- P — UCS PRIMARY NETWORK ENCLOSURE
- S — UCS SECONDARY NETWORK ENCLOSURE
- U — UCS UNV I/O ENCLOSURE

UCS NETWORK SINGLE LINE - NEW

* NEW ITEMS SHOWN IN BOLD *

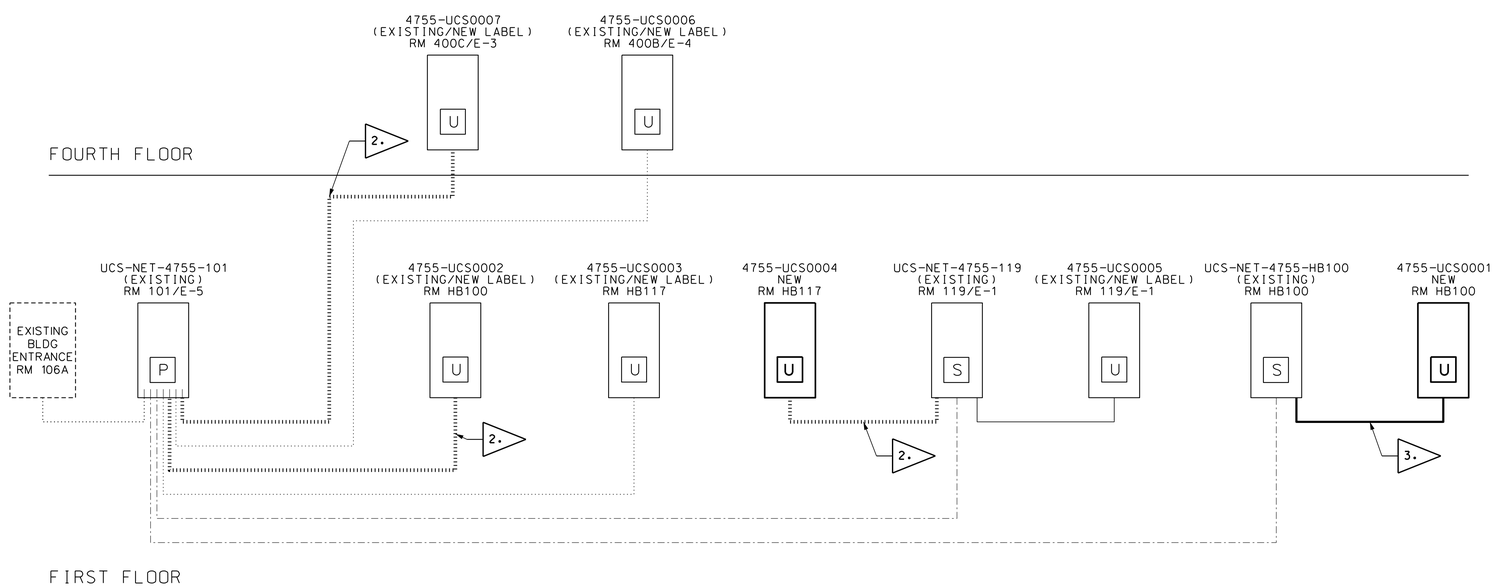

UCS FLAG NOTES:

1. SEE SHEET UCS3, NOTE 5:
REMOVE EXISTING DORSETT XTALK ASSEMBLY AND RETURN TO UCS VIA THE COTR. REMOVE CAT.6 ETHERNET CABLE AND CONDUIT FROM FID01 TO UCS-NET-4755-101.

2. FURNISH AND INSTALL ONE (1) CATEGORY 6 HORIZONTAL CABLE FROM UCS NETWORK PANEL TO UCS I/O ENCLOSURE. TERMINATE CABLE ENDS IN SURFACE MOUNT SINGLE PORT BOXES. FURNISH AND INSTALL CATEGORY 6 PATCH CORD FROM SINGLE PORT BOX TO UCS NETWORK SWITCH AT NETWORK PANEL. FURNISH AND INSTALL CATEGORY 6 PATCH CORD FROM SINGLE PORT BOX TO UCS I/O CARD #1 AT UCS I/O PANEL.

3. FURNISH AND INSTALL ONE (1) CATEGORY 6 PATCH CORD FROM UCS NETWORK PANEL NETWORK SWITCH TO UCS I/O ENCLOSURE, CARD #1.

GENERAL NOTES:

1. CATEGORY 6 HORIZONTAL CABLING SHALL BE SOLID COPPER, 24 AWG, 100 OHM, BALANCED TWISTED PAIR (UTP), PLENUM RATED WITH ORANGE JACKET.
2. CATEGORY 6 STRANDED UTP PATCH CORD(S) SHALL HAVE MOLDED SNAGLESS BOOT WITH STRAIN RELIEF AND ORANGE JACKET. PATCH CORDS SHALL BE OF SUFFICIENT LENGTH TO ALLOW FOR A MINIMUM OF 12" OF SLACK AT EACH END.
3. CATEGORY 6 UTP SINGLE PORT SURFACE MOUNT BOX SHALL BE WHITE OR IVORY. DATA OUTLET 8 PIN MODULAR, UNKEYED, ORANGE, PINNED TO T568 A STANDARDS.
4. UCS NETWORK CABLING SHALL BE CONCEALED IN A MINIMUM 3/4" EMT CONDUIT OR DROP CEILING AT ALL TIMES. UNDER NO CIRCUMSTANCES SHALL THE CABLE BE EXPOSED.
5. ALL CONDUIT USED AS PATHWAY FOR UCS NETWORK CABLING SHALL HAVE ADHESIVE TAGS IDENTIFYING ITS USE. UCS CONDUITS SHALL NOT BE USED FOR ANY OTHER DISCIPLINE.

LABELING REQUIREMENTS

NEW CABLE AND OUTLET LABELING SHALL BE AS FOLLOWS:
UCS-NET-(BLDG #)-(ROOM #) -- CABLE ORIGINATION
UCS-NET-(BLDG #)-(ROOM #) -- CABLE DESTINATION

EXAMPLE:
UCS-NET-4487-BC157
UCS-NET-4487-AB101

CABLES SHALL HAVE MACHINE PRINTED SELF LAMINATING LABELS. OUTLET BOXES SHALL HAVE MACHINE PRINTED LABELS ADHERED TO TOP OF THE BOX. SEE EXAMPLES BELOW:

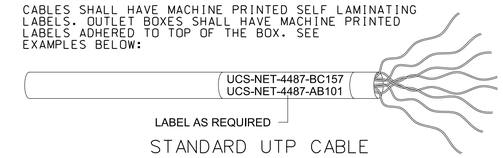

STANDARD UTP CABLE

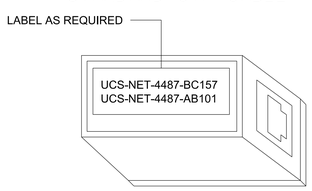

STANDARD SURFACE MOUNT BOX OUTLET

WARNING

DO NOT SCALE THIS DRAWING

THIS DRAWING WAS DESIGNED TO BE PRINTED AT A NASA SHEET SIZE: MSFC STD. SIZE 40" X 28"

PRELIMINARY CADD DWG.

CHANGES TO THIS DRAWING SHALL BE MADE ON CADD ONLY.

3426839 02-06-13 DGB — LATEST CADD UPDATE: 10-24-13 3:30 PM — BY: DUSTIN BORDER

REV.	BY	DATE	REVISION	C.I. NO.	APPROVED

Marshall Space Flight Center
Huntsville, Alabama 35812

WORK REQUEST NO. 3426839

BUILDING 4755

HVAC RENOVATION

UCS DEMO AND NEW NETWORK INFRASTRUCTURE

BASE BID

AE FIRM: KAYA Associates, Inc.
NASA AE CONTRACT NO. NAS8- NNM11AA39C

SUBMITTED: APPROVAL RECOMMENDED: AD22 PROJECT A/E — APPROVED:
AE: DATE: APPROVAL RECOMMENDED: AD22 SUPPORT A/E — AD22 GROUP LEAD DATE:
DESIGNED D. BORDER
DRAWN D. BORDER
CHECKED J. PAGE
APPROVAL RECOMMENDED: KAYA Associates, Inc.
SCALE: AS NOTED — SPEC. NO. FAC M5057

SIGNATURES ON INDEX SHEET INDICATE ACCEPTANCE OF THIS SHEET

REF. NO. UCS21 OF 40

DRAWING NO. FAC-DA-4755-UCS21
SHEET OF

MSFC-FORM 232 REV. 8-21-89-RCL

N:*DesignProjects*4755*DA-Mech. CoF*UCS21.dgn

MSFC Master Bid Disk 03-26-2014

NEW UCS COMM TRUNK LAYOUT

• FURNISH AND INSTALL NEW UCS DATA CABLE SHOWN IN BOLD PER UCS GENERAL NOTE #3 (UNLESS OTHERWISE NOTED) •

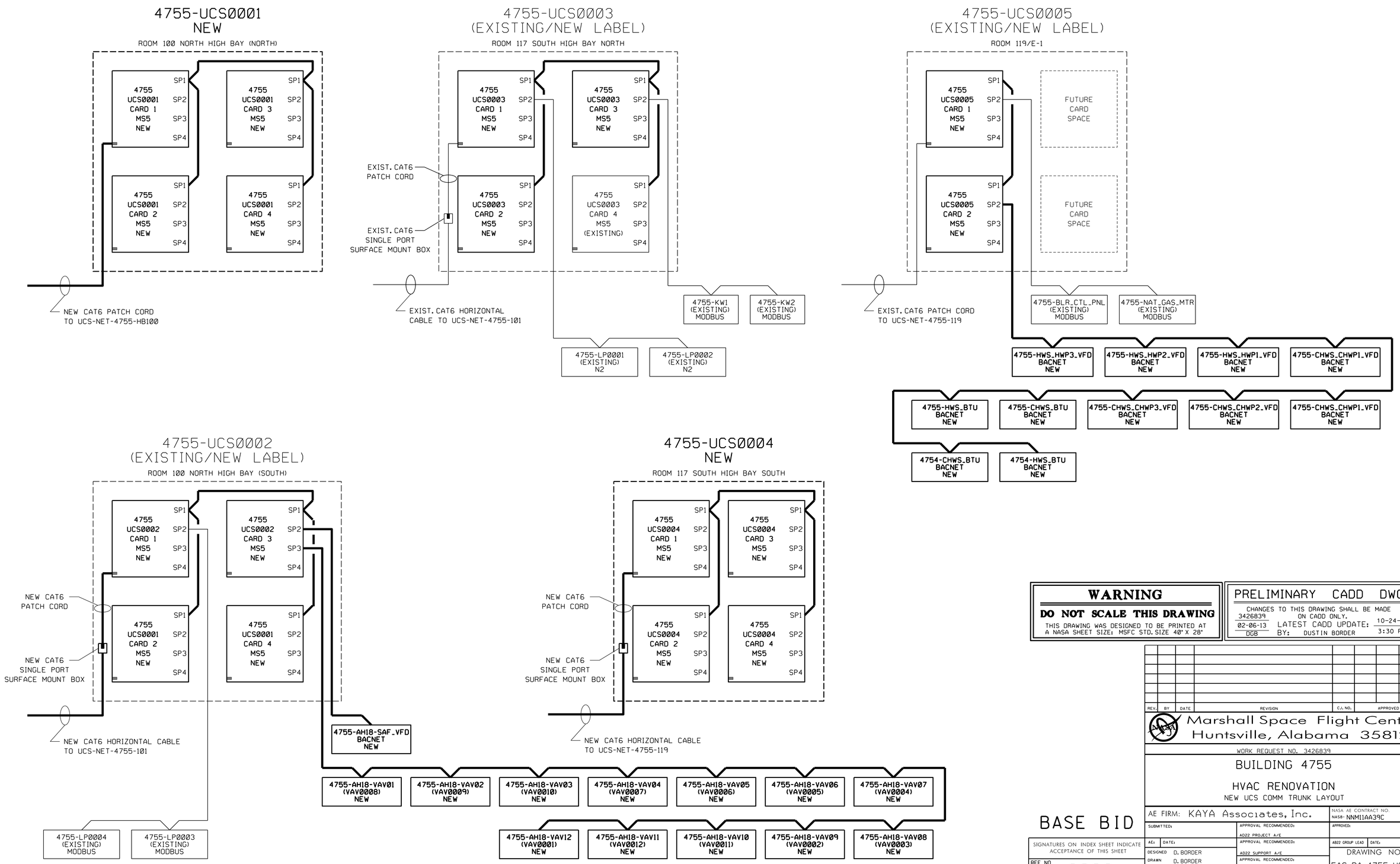

WARNING

DO NOT SCALE THIS DRAWING

THIS DRAWING WAS DESIGNED TO BE PRINTED AT A NASA SHEET SIZE: MSFC STD. SIZE 40" X 28"

PRELIMINARY CADD DWG.

CHANGES TO THIS DRAWING SHALL BE MADE ON CADD ONLY.

3426839 02-06-13 DGB

LATEST CADD UPDATE: 10-24-13 3:30 PM BY: DUSTIN BORDER

REV.	BY	DATE	REVISION	C.I. NO.	APPROVED

Marshall Space Flight Center
Huntsville, Alabama 35812

WORK REQUEST NO. 3426839

BUILDING 4755

HVAC RENOVATION

NEW UCS COMM TRUNK LAYOUT

BASE BID

SIGNATURES ON INDEX SHEET INDICATE ACCEPTANCE OF THIS SHEET

REF. NO. UCS22 OF 40

AE FIRM: KAYA Associates, Inc.

NASA AE CONTRACT NO. NAS8- NNM11AA39C

SUBMITTED: APPROVAL RECOMMENDED: AD22 PROJECT A/E APPROVED:

AE: DATE: APPROVAL RECOMMENDED: AD22 SUPPORT A/E AD22 GROUP LEAD DATE:

DESIGNED D. BORDER
DRAWN D. BORDER
CHECKED J. PAGE

KAYA Associates, Inc.

SCALE: AS NOTED SPEC. NO. FAC M5057

DRAWING NO. FAC-DA-4755-UCS22

SHEET OF

MSFC-FORM 232 REV. 8-21-89-RCL

N:*DesignProjects*4755*DA-Mech. CoF*UCS22.dgn

MSFC Master Bid Disk 03-26-2014

NEW UCS COMM TRUNK LAYOUT

• FURNISH AND INSTALL NEW UCS DATA CABLE SHOWN IN BOLD PER UCS GENERAL NOTE #3 (UNLESS OTHERWISE NOTED) •

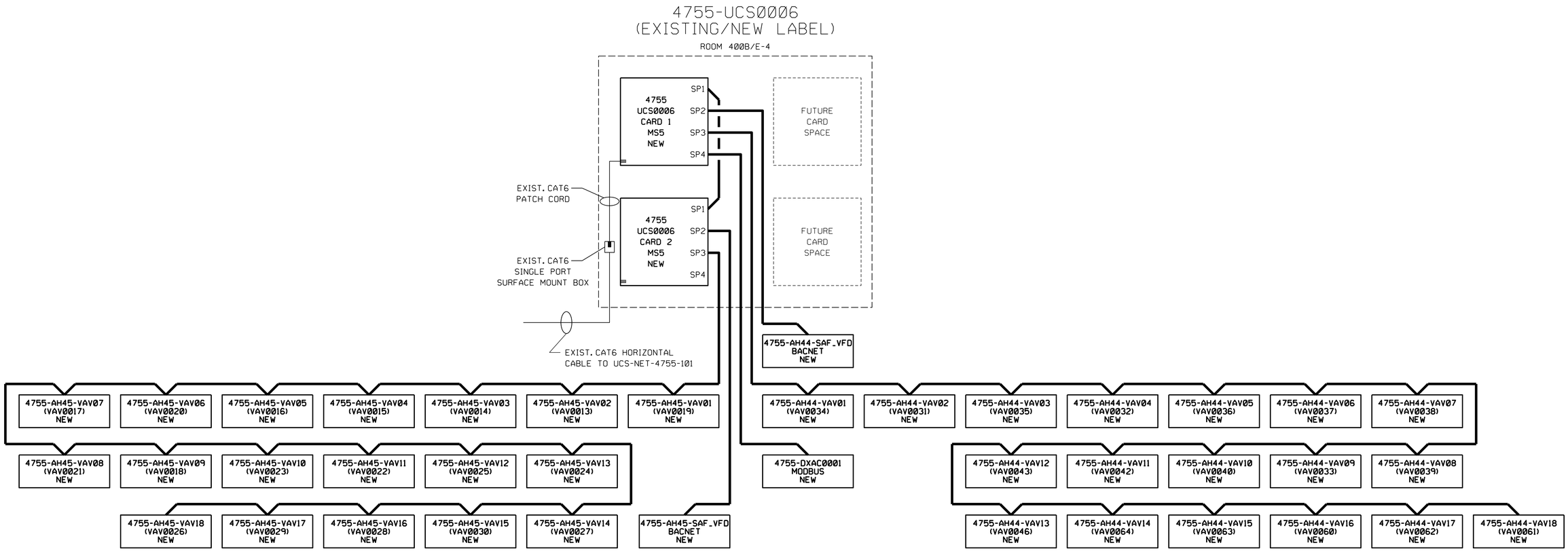

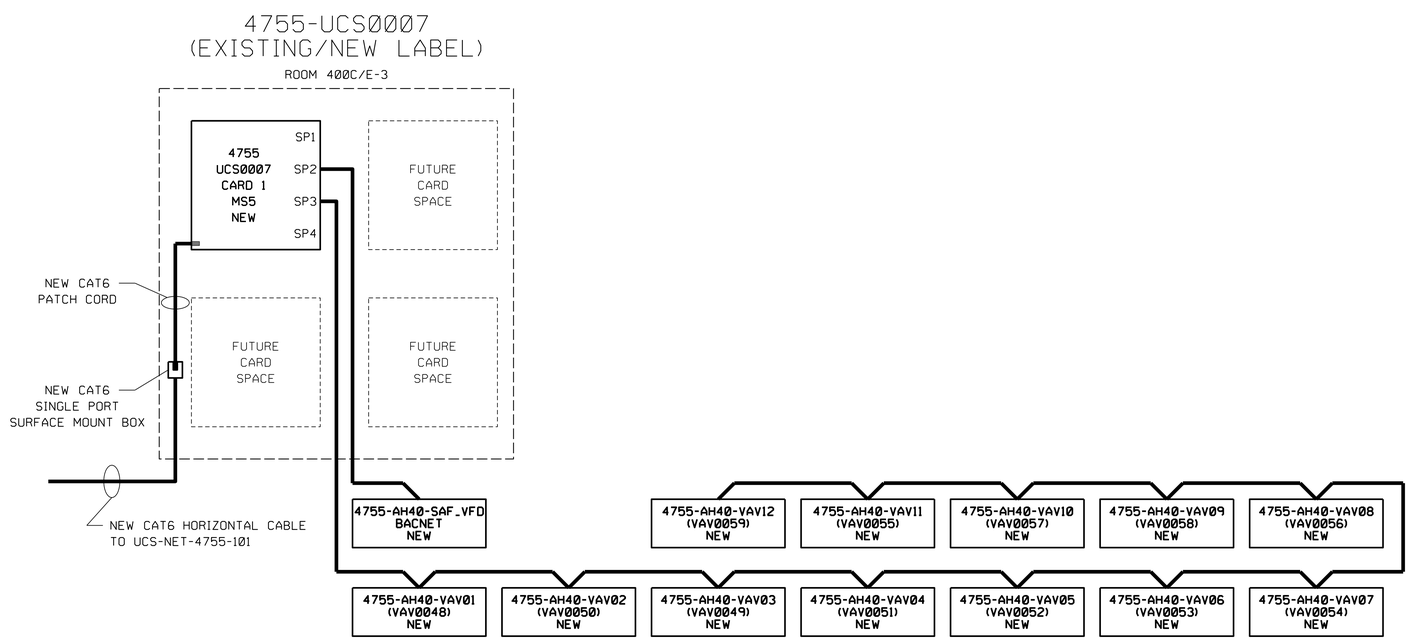

WARNING

DO NOT SCALE THIS DRAWING

THIS DRAWING WAS DESIGNED TO BE PRINTED AT A NASA SHEET SIZE: MSFC STD. SIZE 40" X 28"

PRELIMINARY CADD DWG.

CHANGES TO THIS DRAWING SHALL BE MADE ON CADD ONLY.

3426839 02-06-13 DGB

LATEST CADD UPDATE: 10-24-13 3:30 PM BY: DUSTIN BORDER

REV.	BY	DATE	REVISION	C.I. NO.	APPROVED

Marshall Space Flight Center
Huntsville, Alabama 35812

WORK REQUEST NO. 3426839

BUILDING 4755

HVAC RENOVATION

NEW UCS COMM TRUNK LAYOUT

BASE BID

AE FIRM: KAYA Associates, Inc.

NASA AE CONTRACT NO. NAS8- NNM11AA39C

SUBMITTED: APPROVAL RECOMMENDED: AD22 PROJECT A/E

APPROVED:

AE: DATE: APPROVAL RECOMMENDED: AD22 SUPPORT A/E

AD22 GROUP LEAD: DATE:

DESIGNED D. BORDER
DRAWN D. BORDER
CHECKED J. PAGE

APPROVAL RECOMMENDED: KAYA Associates, Inc.

SCALE: AS NOTED

SPEC. NO. FAC M5057

DRAWING NO. FAC-DA-4755-UCS23

SHEET OF

SIGNATURES ON INDEX SHEET INDICATE ACCEPTANCE OF THIS SHEET

REF. NO. UCS23 OF 40

MSFC-FORM 232 REV. 8-21-89-RCL

N:*DesignProjects*4755*DA-Mech. CoF*UCS23.dgn

MSFC Master Bid Disk 03-26-2014

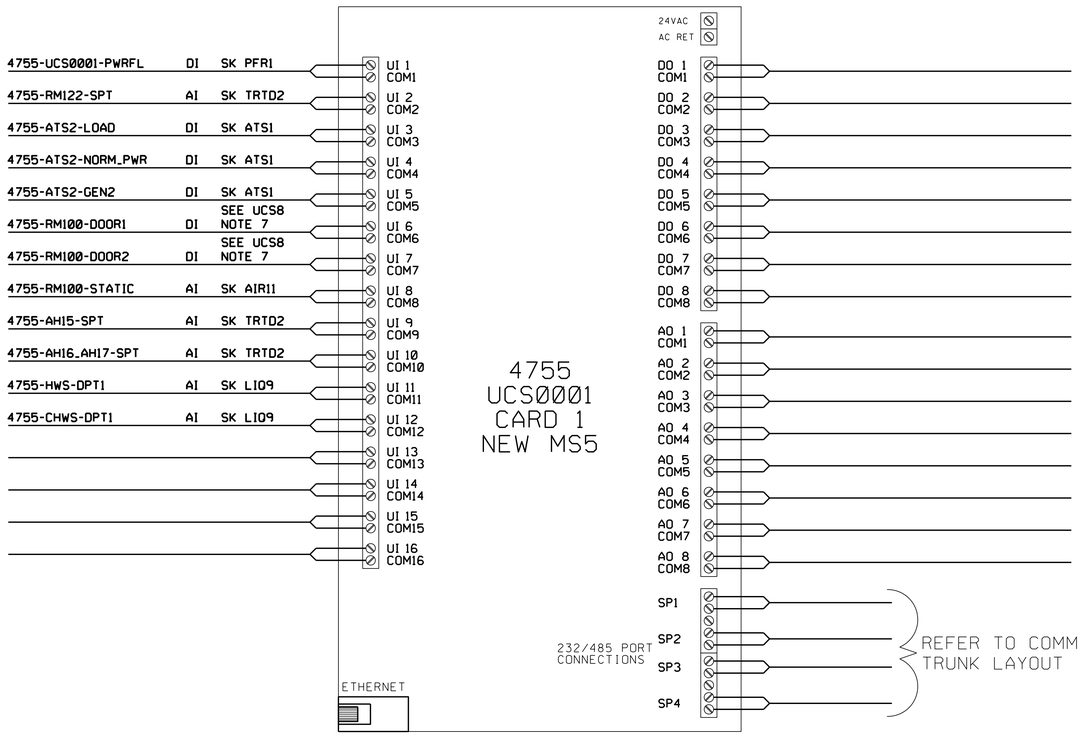

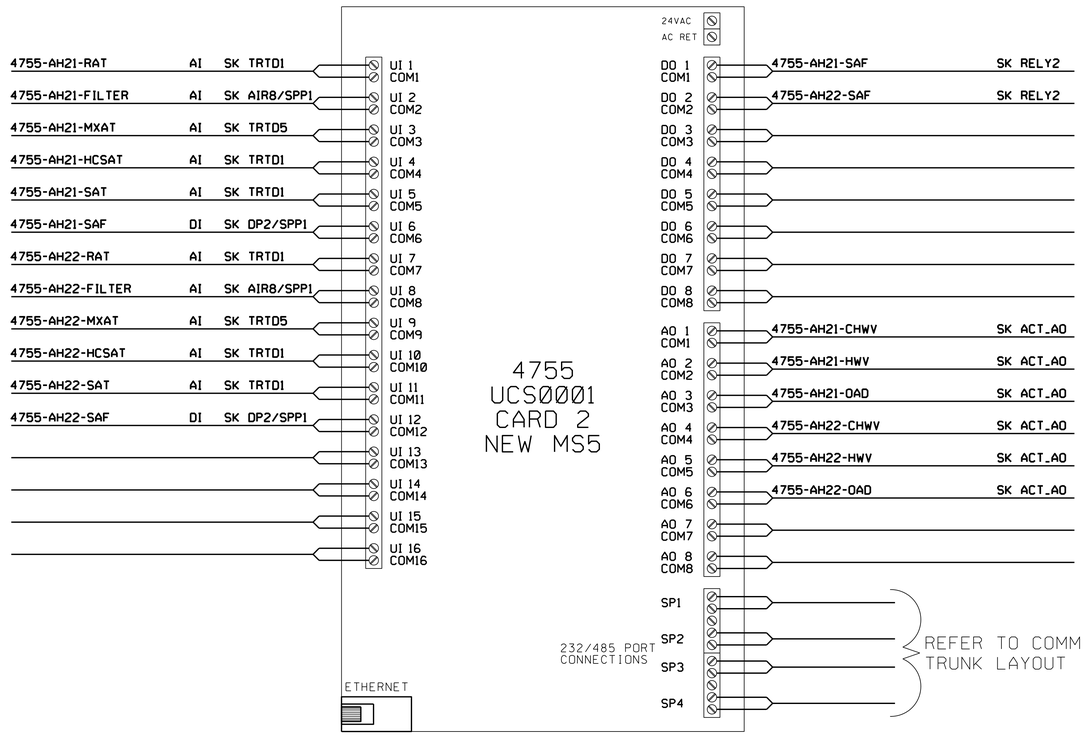

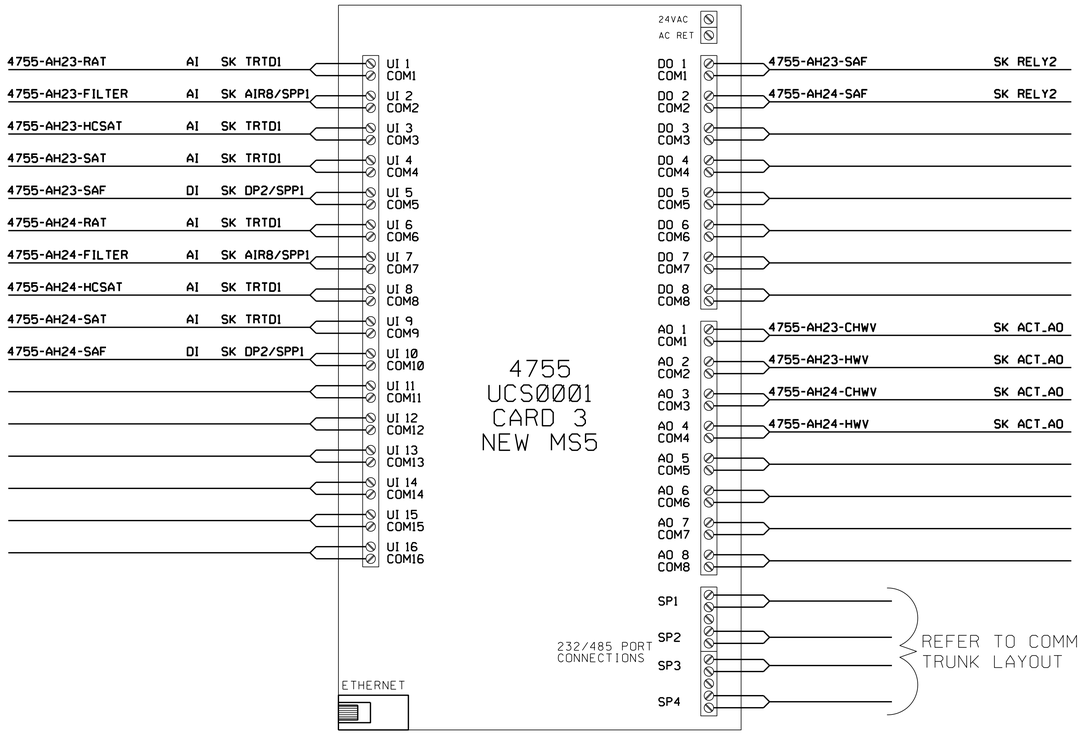

WARNING

DO NOT SCALE THIS DRAWING

THIS DRAWING WAS DESIGNED TO BE PRINTED AT A NASA SHEET SIZE: MSFC STD. SIZE 40" X 28"

PRELIMINARY CADD DWG.

CHANGES TO THIS DRAWING SHALL BE MADE ON CADD ONLY.

3426839 02-06-13 DGB LATEST CADD UPDATE: 10-24-13 3:30 PM BY: DUSTIN BORDER

REV.	BY	DATE	REVISION	C.I. NO.	APPROVED

Marshall Space Flight Center
Huntsville, Alabama 35812

WORK REQUEST NO. 3426839

BUILDING 4755

HVAC RENOVATION

UCS0001, CARDS 1-3 NEW WIRING DETAILS

BASE BID

AE FIRM: KAYA Associates, Inc.

NASA AE CONTRACT NO. NAS8- NNM11AA39C

SUBMITTED: | APPROVAL RECOMMENDED: AD22 PROJECT A/E | APPROVED:

AE: DATE: | APPROVAL RECOMMENDED: AD22 SUPPORT A/E | AB22 GROUP LEAD DATE:

DESIGNED D. BORDER
DRAWN D. BORDER
CHECKED J. PAGE

APPROVAL RECOMMENDED: KAYA Associates, Inc.

SCALE: AS NOTED | SPEC. NO. FAC M5057

DRAWING NO. FAC-DA-4755-UCS24

SHEET OF

SIGNATURES ON INDEX SHEET INDICATE ACCEPTANCE OF THIS SHEET

REF. NO. UCS24 OF 40

MSFC-FORM 232 REV. 8-21-89-RCL

N:*DesignProjects*4755*DA-Mech. CoF*UCS24.dgn

MSFC Master Bid Disk 03-26-2014

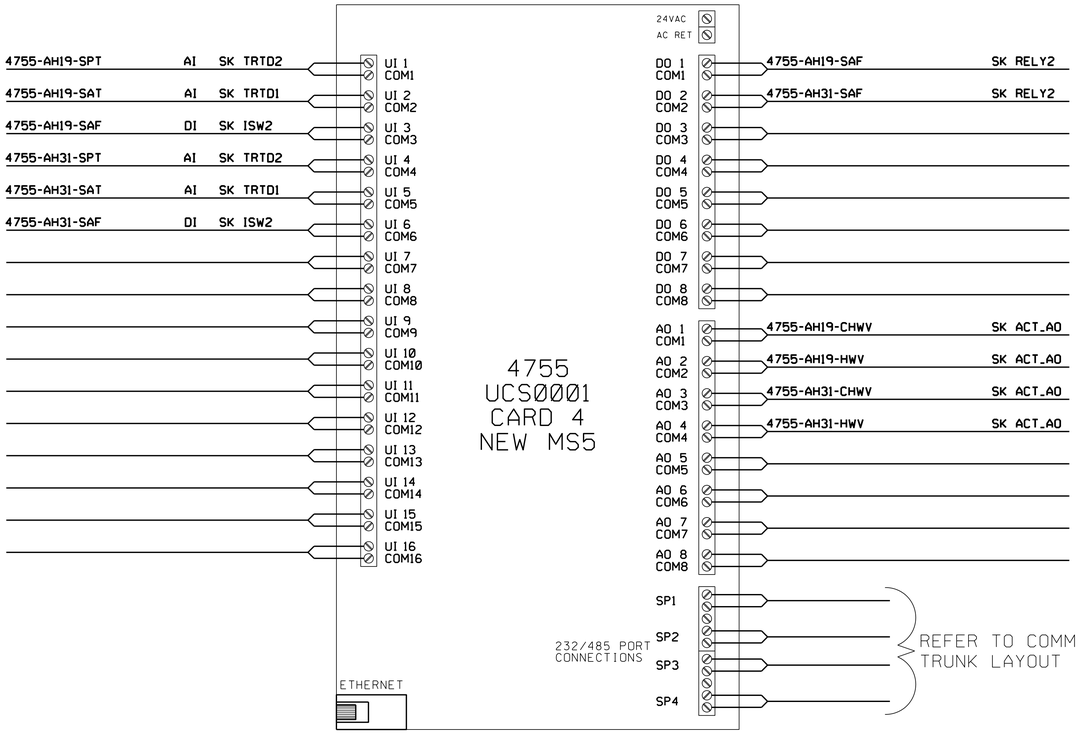

WARNING

DO NOT SCALE THIS DRAWING

THIS DRAWING WAS DESIGNED TO BE PRINTED AT A NASA SHEET SIZE: MSFC STD. SIZE 40" X 28"

PRELIMINARY CADD DWG.

CHANGES TO THIS DRAWING SHALL BE MADE ON CADD ONLY.

3426839 02-06-13 DGB

LATEST CADD UPDATE: 10-24-13 3:30 PM

BY: DUSTIN BORDER

REV.	BY	DATE	REVISION	C.I. NO.	APPROVED

Marshall Space Flight Center
Huntsville, Alabama 35812

WORK REQUEST NO. 3426839

BUILDING 4755

HVAC RENOVATION

UCS0001, CARD 4 NEW WIRING DETAILS

BASE BID

AE FIRM: KAYA Associates, Inc.

NASA AE CONTRACT NO. NAS8- NNM11AA39C

SUBMITTED: | APPROVAL RECOMMENDED: AD22 PROJECT A/E | APPROVED:

AE: DATE: | APPROVAL RECOMMENDED: AD22 SUPPORT A/E | AB22 GROUP LEAD DATE:

DESIGNED D. BORDER
DRAWN D. BORDER
CHECKED J. PAGE

APPROVAL RECOMMENDED: KAYA Associates, Inc.

SCALE: AS NOTED | SPEC. NO. FAC M5057

DRAWING NO. FAC-DA-4755-UCS25

SHEET OF

SIGNATURES ON INDEX SHEET INDICATE ACCEPTANCE OF THIS SHEET

REF. NO. UCS25 OF 40

MSFC-FORM 232 REV. 8-21-89-RCL

N:*DesignProjects*4755*DA-Mech. CoF*UCS25.dgn

MSFC Master Bid Disk 03-26-2014

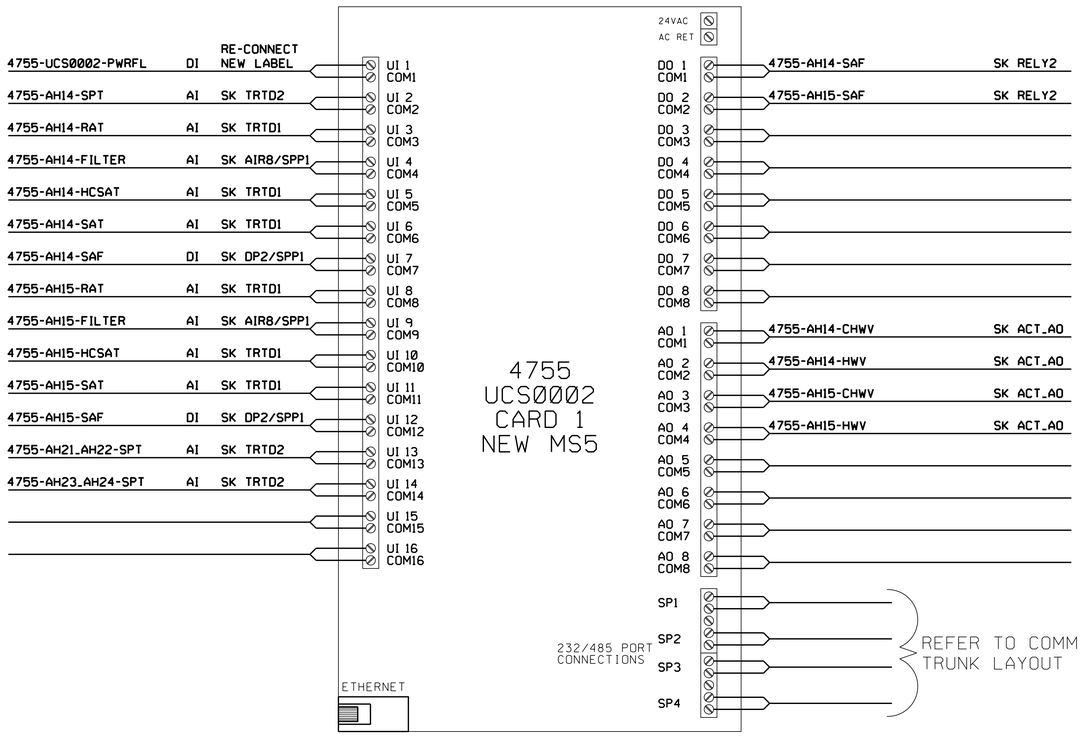

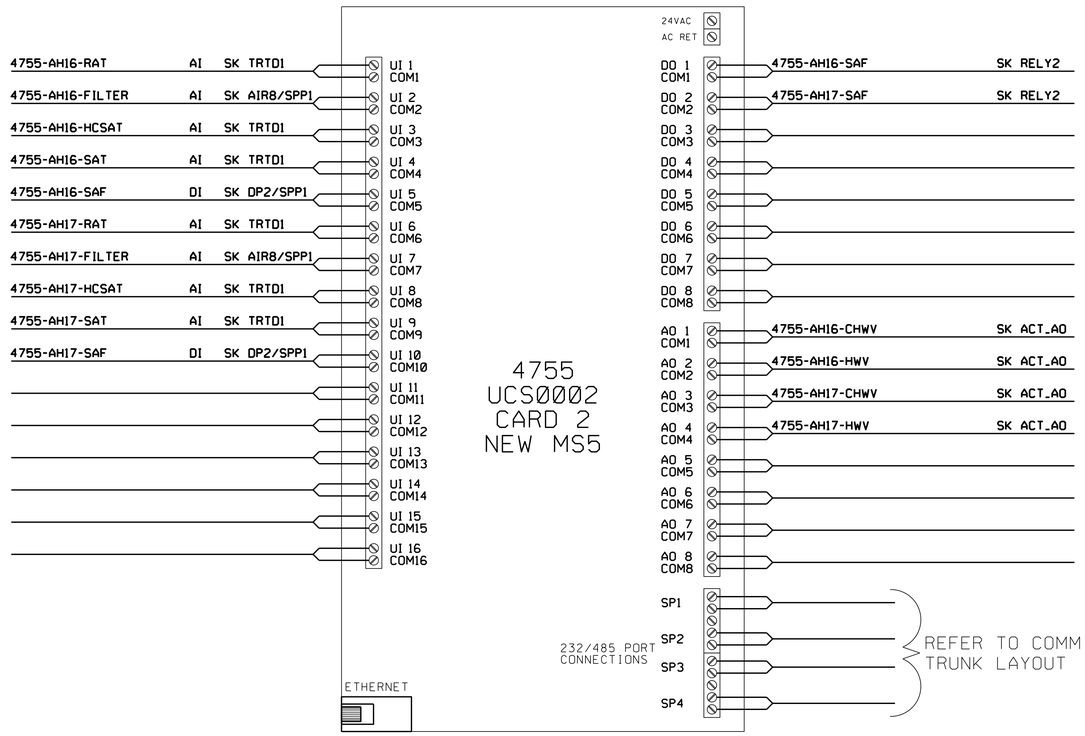

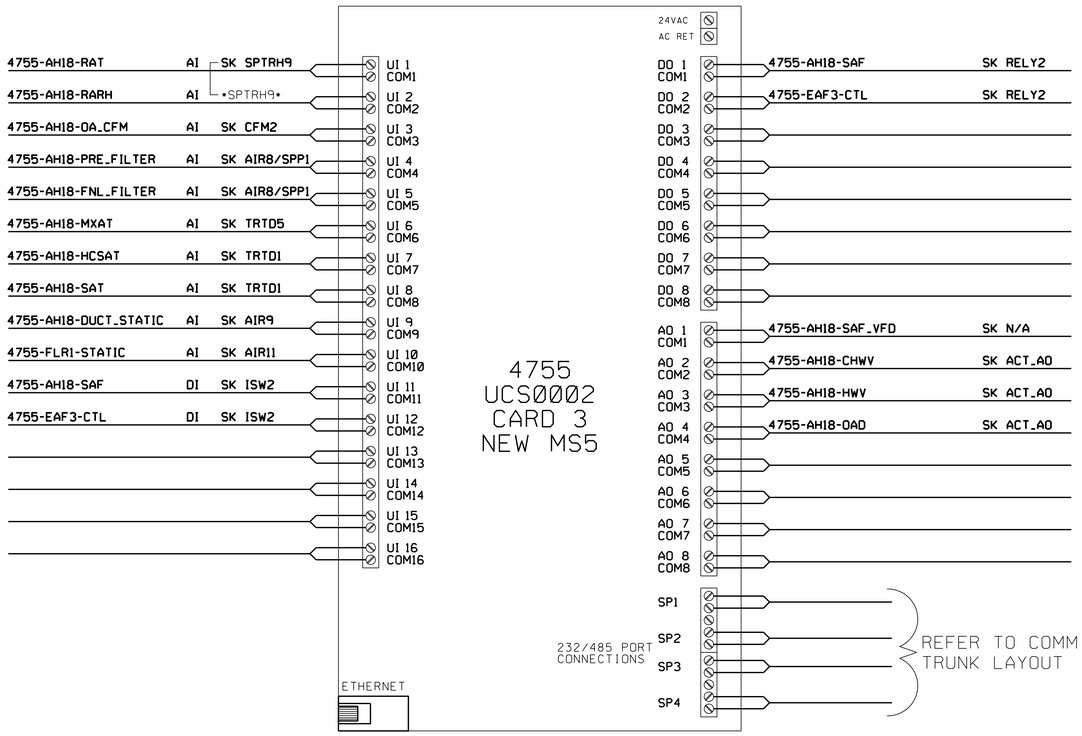

WARNING

DO NOT SCALE THIS DRAWING

THIS DRAWING WAS DESIGNED TO BE PRINTED AT A NASA SHEET SIZE: MSFC STD. SIZE 40" X 28"

PRELIMINARY CADD DWG.

CHANGES TO THIS DRAWING SHALL BE MADE ON CADD ONLY.

3426839 02-06-13 DGB LATEST CADD UPDATE: 10-24-13 3:30 PM BY: DUSTIN BORDER

REV.	BY	DATE	REVISION	C.I. NO.	APPROVED

Marshall Space Flight Center
Huntsville, Alabama 35812

WORK REQUEST NO. 3426839

BUILDING 4755

HVAC RENOVATION

UCS0002, CARDS 1-3 NEW WIRING DETAILS

BASE BID

AE FIRM: KAYA Associates, Inc.

NASA AE CONTRACT NO. NAS8- NNM11AA39C

SUBMITTED: | APPROVAL RECOMMENDED: AD22 PROJECT A/E | APPROVED:

AE: DATE: | APPROVAL RECOMMENDED: AD22 SUPPORT A/E | AB22 GROUP LEAD DATE:

DESIGNED D. BORDER
DRAWN D. BORDER
CHECKED J. PAGE
SCALE: AS NOTED

APPROVAL RECOMMENDED: KAYA Associates, Inc.

SPEC. NO. FAC M5057

DRAWING NO. FAC-DA-4755-UCS26

SHEET OF

SIGNATURES ON INDEX SHEET INDICATE ACCEPTANCE OF THIS SHEET

REF. NO. UCS26 OF 40

MSFC-FORM 232 REV. 8-21-89-RCL

N:*DesignProjects*4755*DA-Mech. CoF*UCS26.dgn

MSFC Master Bid Disk 03-26-2014

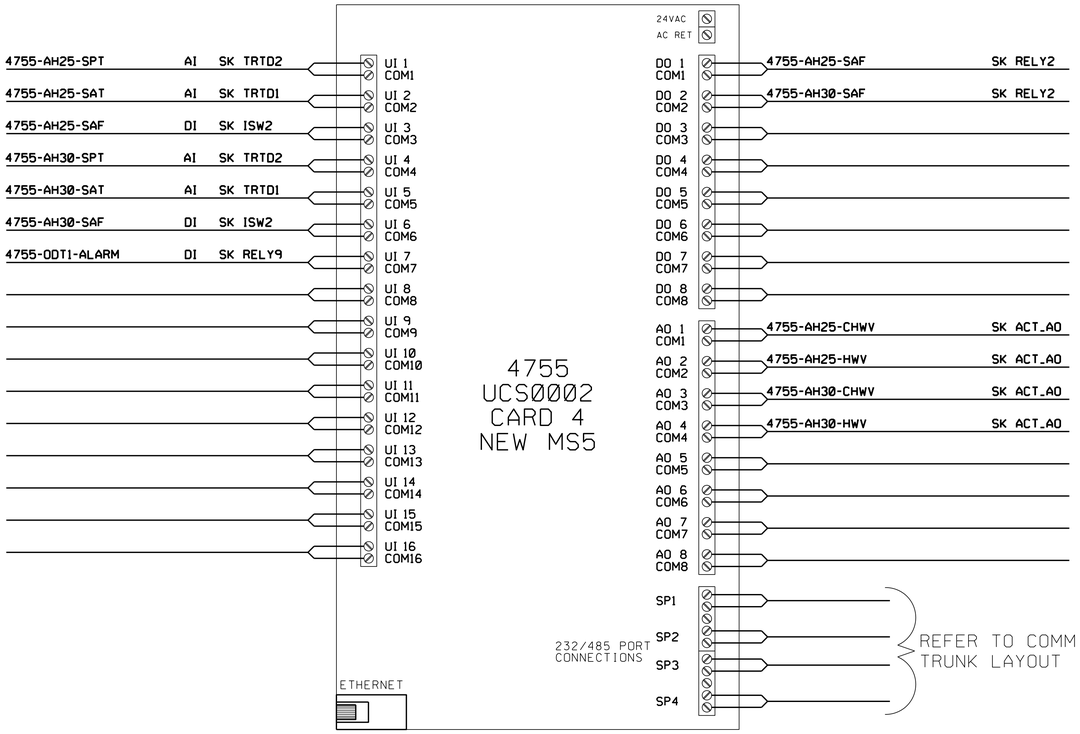

WARNING

DO NOT SCALE THIS DRAWING

THIS DRAWING WAS DESIGNED TO BE PRINTED AT A NASA SHEET SIZE: MSFC STD. SIZE 40" X 28"

PRELIMINARY CADD DWG.

CHANGES TO THIS DRAWING SHALL BE MADE ON CADD ONLY.

3426839 02-06-13 DGB

LATEST CADD UPDATE: 10-24-13 3:30 PM

BY: DUSTIN BORDER

REV.	BY	DATE	REVISION	C.I. NO.	APPROVED

Marshall Space Flight Center
Huntsville, Alabama 35812

WORK REQUEST NO. 3426839

BUILDING 4755

HVAC RENOVATION

UCS0002, CARD 4 NEW WIRING DETAILS

BASE BID

AE FIRM: KAYA Associates, Inc.

NASA AE CONTRACT NO. NAS8- NNM11AA39C

SUBMITTED: | APPROVAL RECOMMENDED: AD22 PROJECT A/E | APPROVED:

AE: DATE: | APPROVAL RECOMMENDED: AD22 SUPPORT A/E | AB22 GROUP LEAD DATE:

DESIGNED D. BORDER
DRAWN D. BORDER
CHECKED J. PAGE

APPROVAL RECOMMENDED: KAYA Associates, Inc.

SCALE: AS NOTED | SPEC. NO. FAC M5057

DRAWING NO. FAC-DA-4755-UCS27

SHEET OF

SIGNATURES ON INDEX SHEET INDICATE ACCEPTANCE OF THIS SHEET

REF. NO. UCS27 OF 40

MSFC-FORM 232 REV. 8-21-89-RCL

N:*DesignProjects*4755*DA-Mech. CoF*UCS27.dgn

MSFC Master Bid Disk 03-26-2014

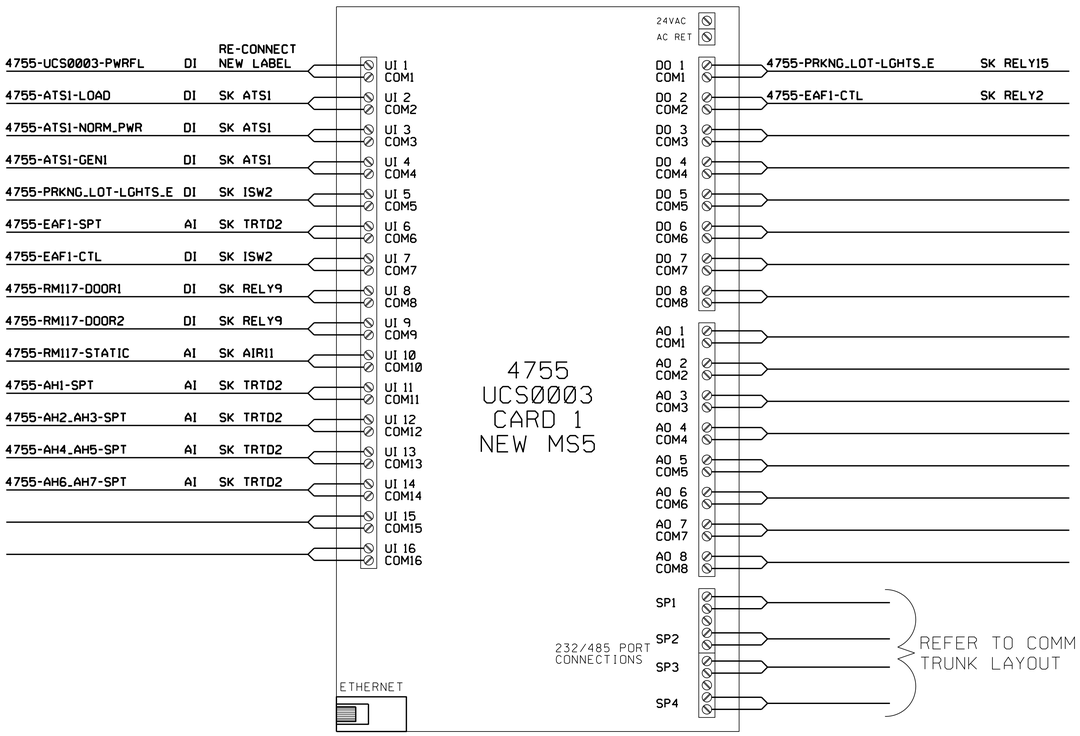

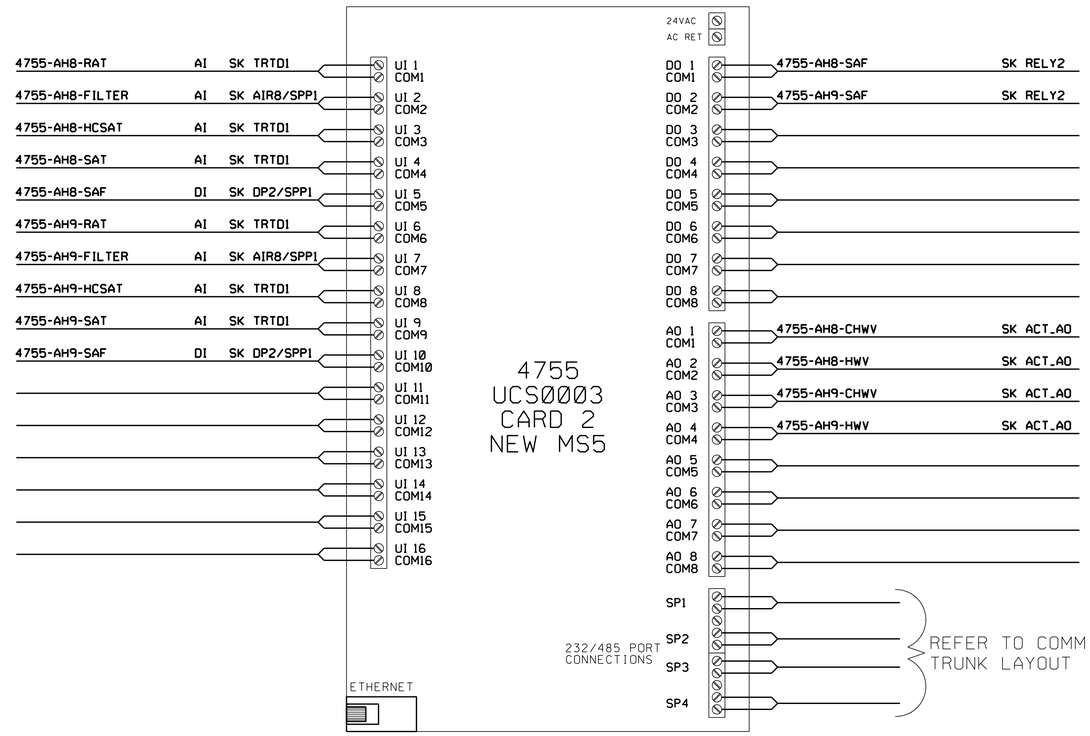

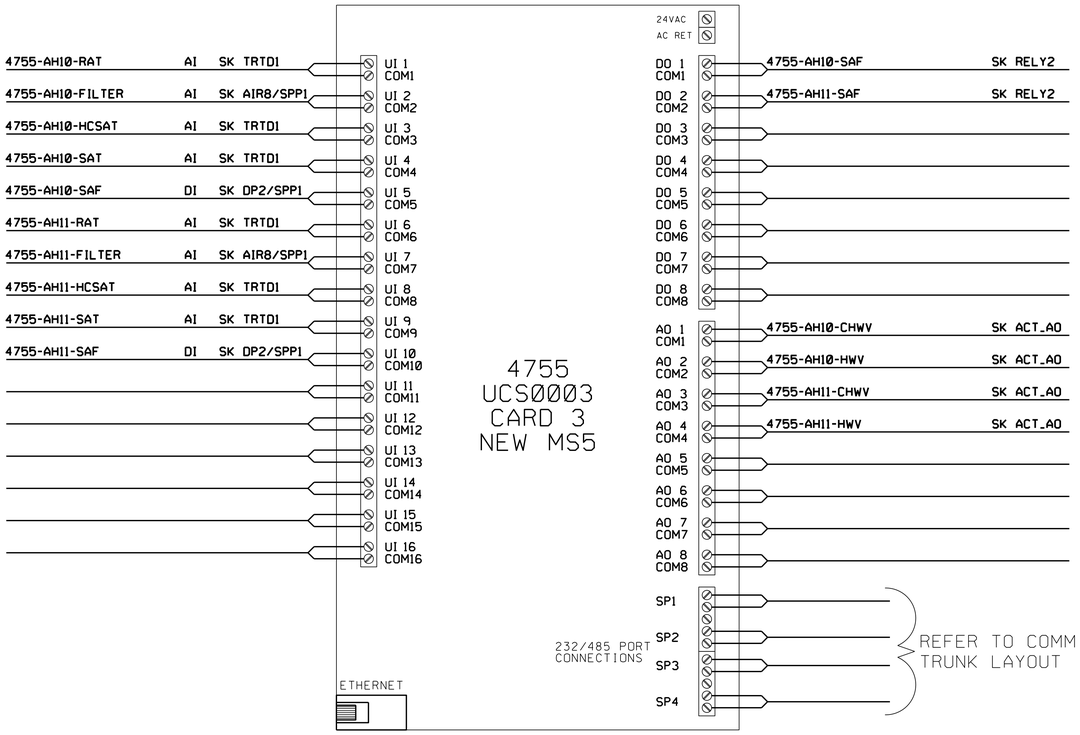

WARNING

DO NOT SCALE THIS DRAWING

THIS DRAWING WAS DESIGNED TO BE PRINTED AT A NASA SHEET SIZE: MSFC STD. SIZE 40" X 28"

PRELIMINARY CADD DWG.

CHANGES TO THIS DRAWING SHALL BE MADE ON CADD ONLY.

3426839 02-06-13 DGB LATEST CADD UPDATE: 10-24-13 3:30 PM BY: DUSTIN BORDER

REV.	BY	DATE	REVISION	C.I. NO.	APPROVED

Marshall Space Flight Center
Huntsville, Alabama 35812

WORK REQUEST NO. 3426839

BUILDING 4755

HVAC RENOVATION

UCS0003, CARDS 1-3 NEW WIRING DETAILS

BASE BID

AE FIRM: KAYA Associates, Inc.

NASA AE CONTRACT NO. NAS8- NNM11AA39C

SUBMITTED: | APPROVAL RECOMMENDED: AD22 PROJECT A/E | APPROVED:

AE: DATE: | APPROVAL RECOMMENDED: AD22 SUPPORT A/E | AB22 GROUP LEAD DATE:

DESIGNED D. BORDER
DRAWN D. BORDER
CHECKED J. PAGE

APPROVAL RECOMMENDED: KAYA Associates, Inc.

SCALE: AS NOTED | SPEC. NO. FAC M5057

DRAWING NO. FAC-DA-4755-UCS28

SHEET OF

SIGNATURES ON INDEX SHEET INDICATE ACCEPTANCE OF THIS SHEET

REF. NO. UCS28 OF 40

MSFC-FORM 232 REV. 8-21-89-RCL

N:*DesignProjects*4755*DA-Mech. CoF*UCS28.dgn

MSFC Master Bid Disk 03-26-2014

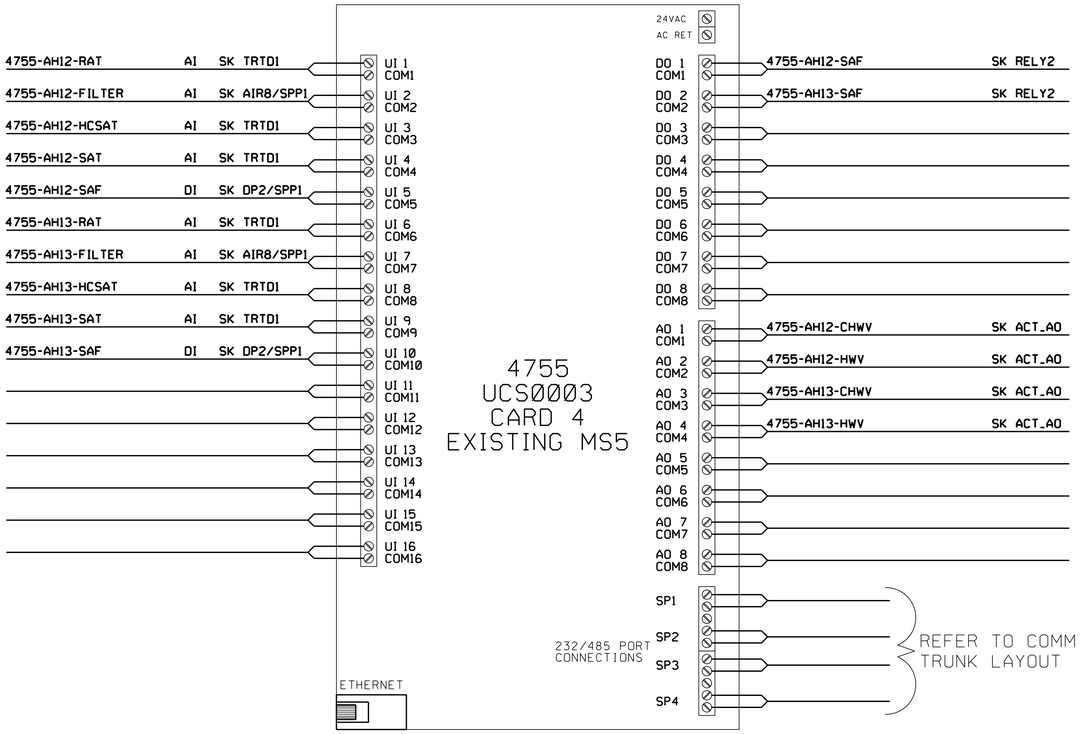

WARNING

DO NOT SCALE THIS DRAWING

THIS DRAWING WAS DESIGNED TO BE PRINTED AT A NASA SHEET SIZE: MSFC STD. SIZE 40" X 28"

PRELIMINARY CADD DWG.

CHANGES TO THIS DRAWING SHALL BE MADE ON CADD ONLY.

3426839 02-06-13 DGB

LATEST CADD UPDATE: 10-24-13 3:30 PM

BY: DUSTIN BORDER

REV.	BY	DATE	REVISION	C.I. NO.	APPROVED

Marshall Space Flight Center
Huntsville, Alabama 35812

WORK REQUEST NO. 3426839

BUILDING 4755

HVAC RENOVATION

UCS0003, CARD 4 NEW WIRING DETAILS

BASE BID

AE FIRM: KAYA Associates, Inc.

NASA AE CONTRACT NO. NAS8- NNM11AA39C

SUBMITTED: | APPROVAL RECOMMENDED: AD22 PROJECT A/E | APPROVED:

AE: DATE: | APPROVAL RECOMMENDED: AD22 SUPPORT A/E | AB22 GROUP LEAD DATE:

DESIGNED D. BORDER
DRAWN D. BORDER
CHECKED J. PAGE

APPROVAL RECOMMENDED: KAYA Associates, Inc.

SCALE: AS NOTED | SPEC. NO. FAC M5057

DRAWING NO. FAC-DA-4755-UCS29

SHEET OF

SIGNATURES ON INDEX SHEET INDICATE ACCEPTANCE OF THIS SHEET

REF. NO. UCS29 OF 40

MSFC-FORM 232 REV. 8-21-89-RCL

N:*DesignProjects*4755*DA-Mech. CoF*UCS29.dgn

MSFC Master Bid Disk 03-26-2014

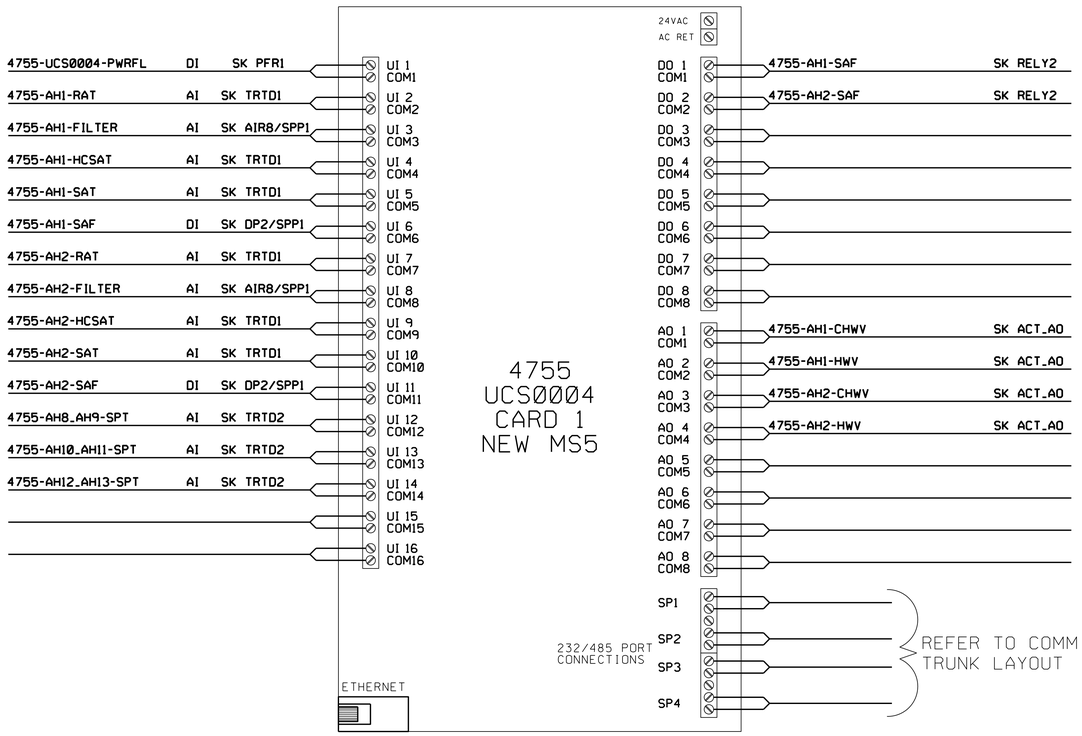

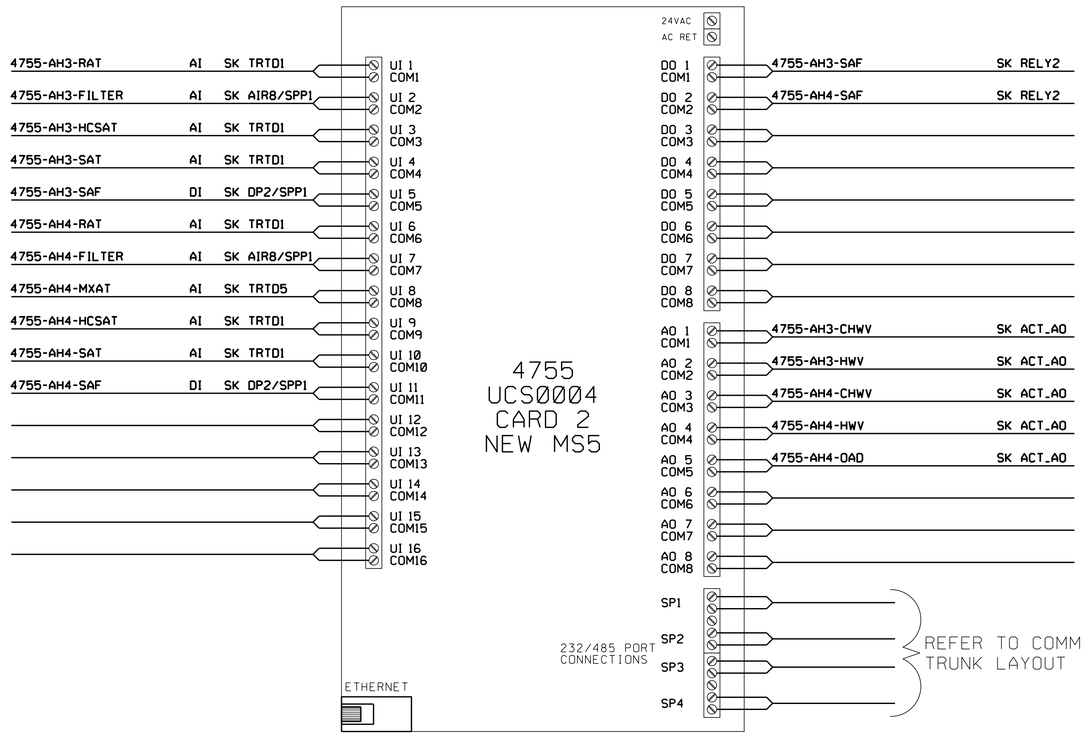

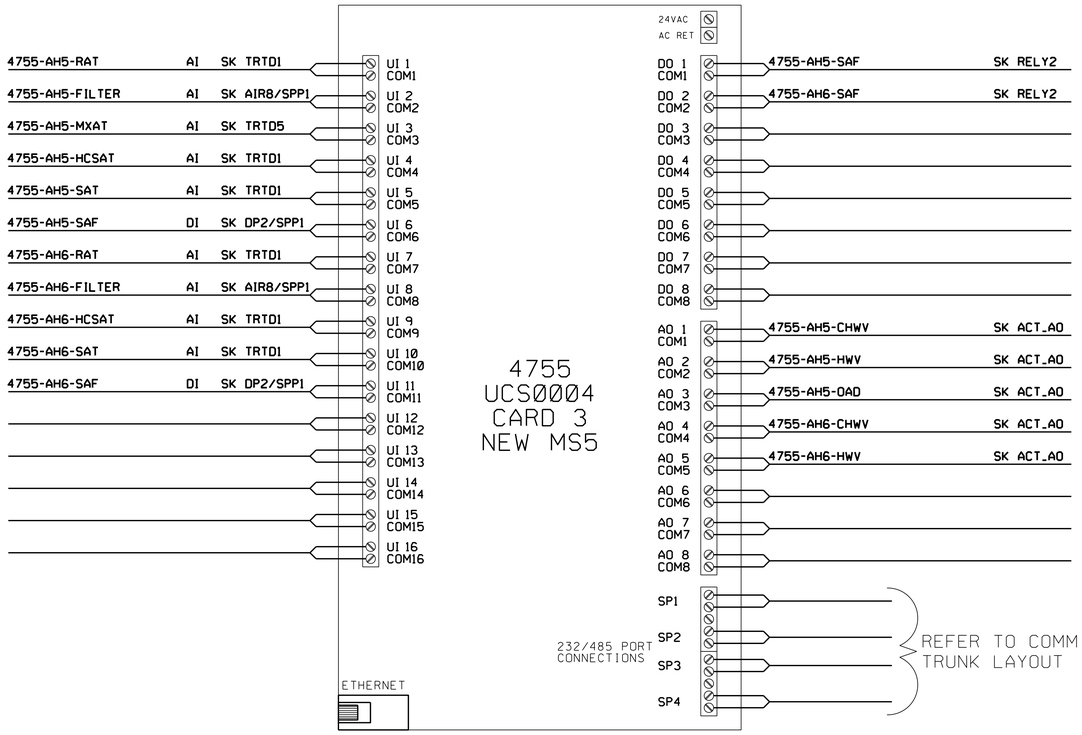

WARNING

DO NOT SCALE THIS DRAWING

THIS DRAWING WAS DESIGNED TO BE PRINTED AT A NASA SHEET SIZE: MSFC STD. SIZE 40" X 28"

PRELIMINARY CADD DWG.

CHANGES TO THIS DRAWING SHALL BE MADE ON CADD ONLY.

3426839 02-06-13 DGB LATEST CADD UPDATE: 10-24-13 3:30 PM BY: DUSTIN BORDER

REV.	BY	DATE	REVISION	C.I. NO.	APPROVED

Marshall Space Flight Center
Huntsville, Alabama 35812

WORK REQUEST NO. 3426839

BUILDING 4755

HVAC RENOVATION

UCS0004, CARDS 1-3 NEW WIRING DETAILS

BASE BID

AE FIRM: KAYA Associates, Inc.

NASA AE CONTRACT NO. NAS8- NNM11AA39C

SUBMITTED: | APPROVAL RECOMMENDED: AD22 PROJECT A/E | APPROVED:

AE: DATE: | APPROVAL RECOMMENDED: AD22 SUPPORT A/E | AB22 GROUP LEAD DATE:

DESIGNED D. BORDER
DRAWN D. BORDER
CHECKED J. PAGE

APPROVAL RECOMMENDED: KAYA Associates, Inc.

SCALE: AS NOTED | SPEC. NO. FAC M5057

DRAWING NO. FAC-DA-4755-UCS30

SHEET OF

SIGNATURES ON INDEX SHEET INDICATE ACCEPTANCE OF THIS SHEET

REF. NO. UCS30 OF 40

MSFC-FORM 232 REV. 8-21-89-RCL

N:*DesignProjects*4755*DA-Mech. CoF*UCS30.dgn

MSFC Master Bid Disk 03-26-2014

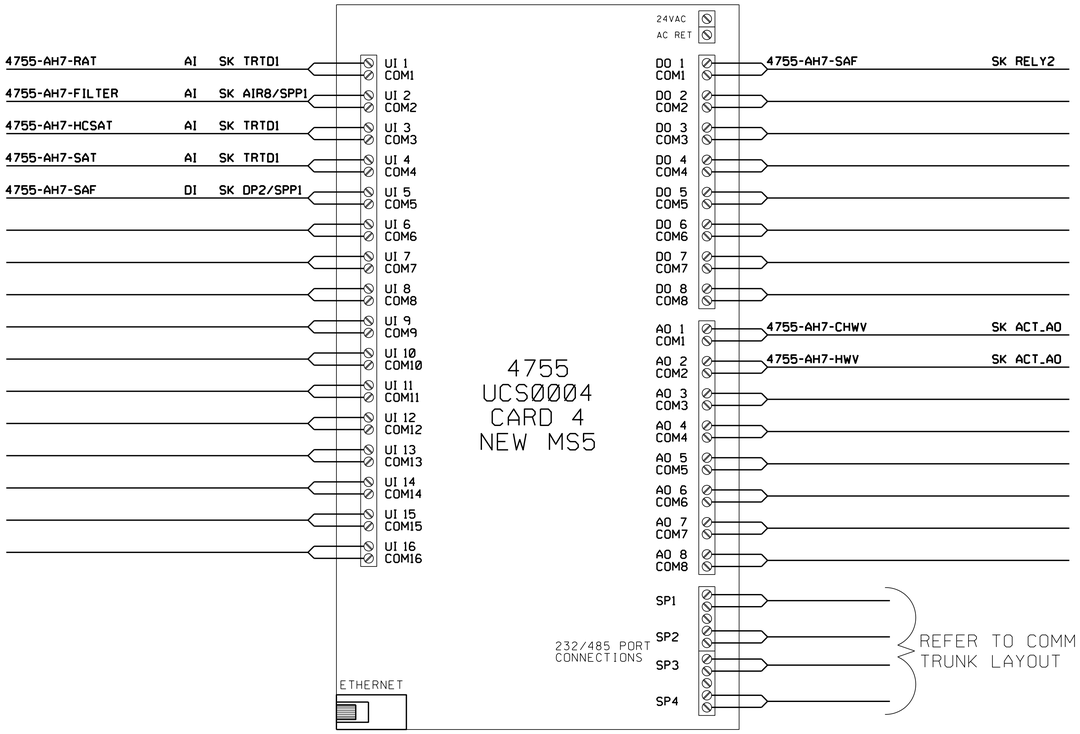

WARNING

DO NOT SCALE THIS DRAWING

THIS DRAWING WAS DESIGNED TO BE PRINTED AT A NASA SHEET SIZE: MSFC STD. SIZE 40" X 28"

PRELIMINARY CADD DWG.

CHANGES TO THIS DRAWING SHALL BE MADE ON CADD ONLY.

3426839 02-06-13 DGB

LATEST CADD UPDATE: 10-24-13 3:30 PM

BY: DUSTIN BORDER

REV.	BY	DATE	REVISION	C.I. NO.	APPROVED

Marshall Space Flight Center
Huntsville, Alabama 35812

WORK REQUEST NO. 3426839

BUILDING 4755

HVAC RENOVATION

UCS0004, CARD 4 NEW WIRING DETAILS

BASE BID

AE FIRM: KAYA Associates, Inc.

NASA AE CONTRACT NO. NAS8- NNM11AA39C

SUBMITTED: | APPROVAL RECOMMENDED: AD22 PROJECT A/E | APPROVED:

AE: DATE: | APPROVAL RECOMMENDED: AD22 SUPPORT A/E | AB22 GROUP LEAD DATE:

DESIGNED D. BORDER
DRAWN D. BORDER
CHECKED J. PAGE

APPROVAL RECOMMENDED: KAYA Associates, Inc.

SCALE: AS NOTED | SPEC. NO. FAC M5057

DRAWING NO. FAC-DA-4755-UCS31

SHEET OF

SIGNATURES ON INDEX SHEET INDICATE ACCEPTANCE OF THIS SHEET

REF. NO. UCS31 OF 40

MSFC-FORM 232 REV. 8-21-89-RCL

N:*DesignProjects*4755*DA-Mech. CoF*UCS31.dgn

MSFC Master Bid Disk 03-26-2014

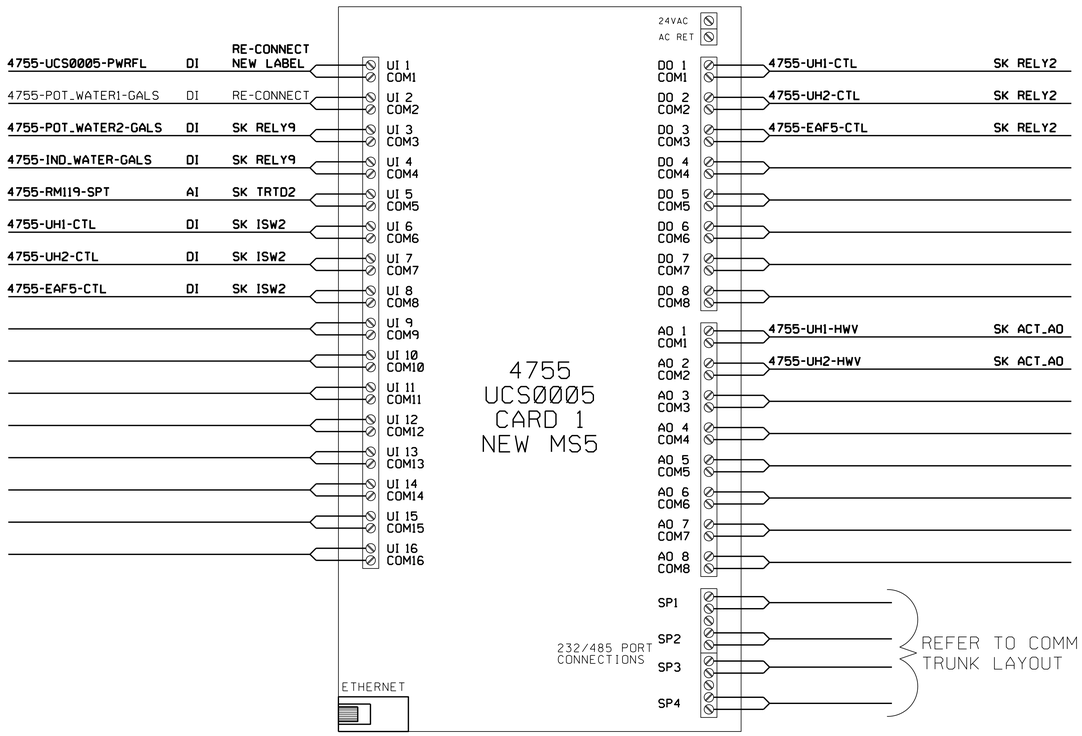

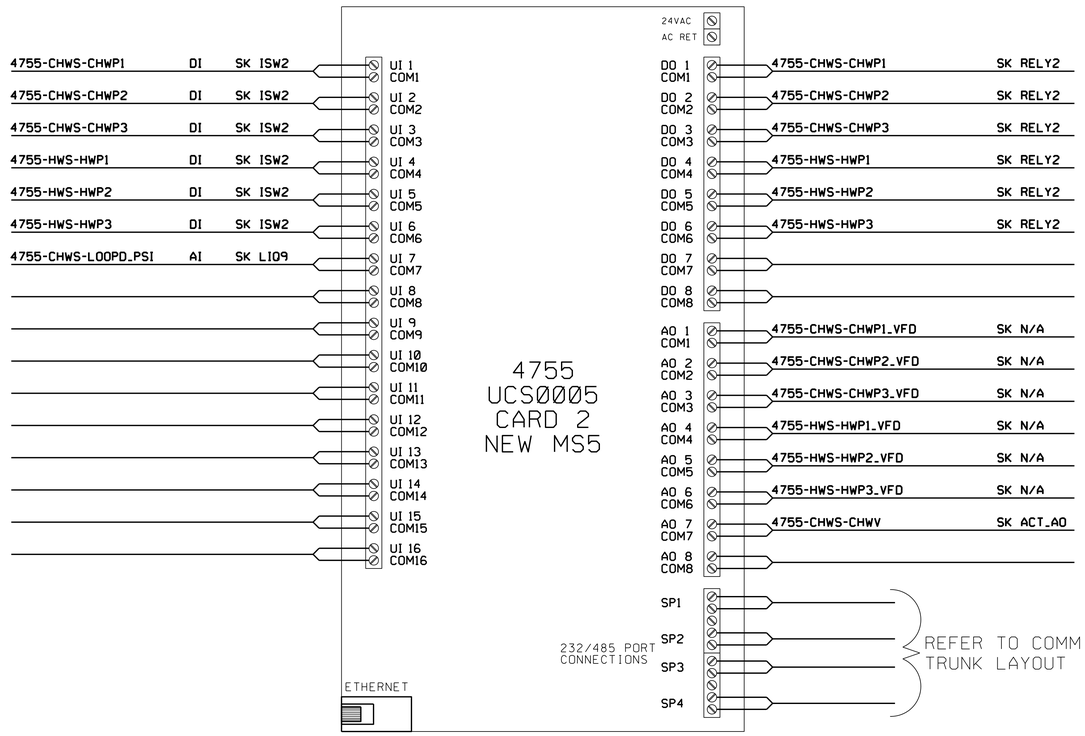

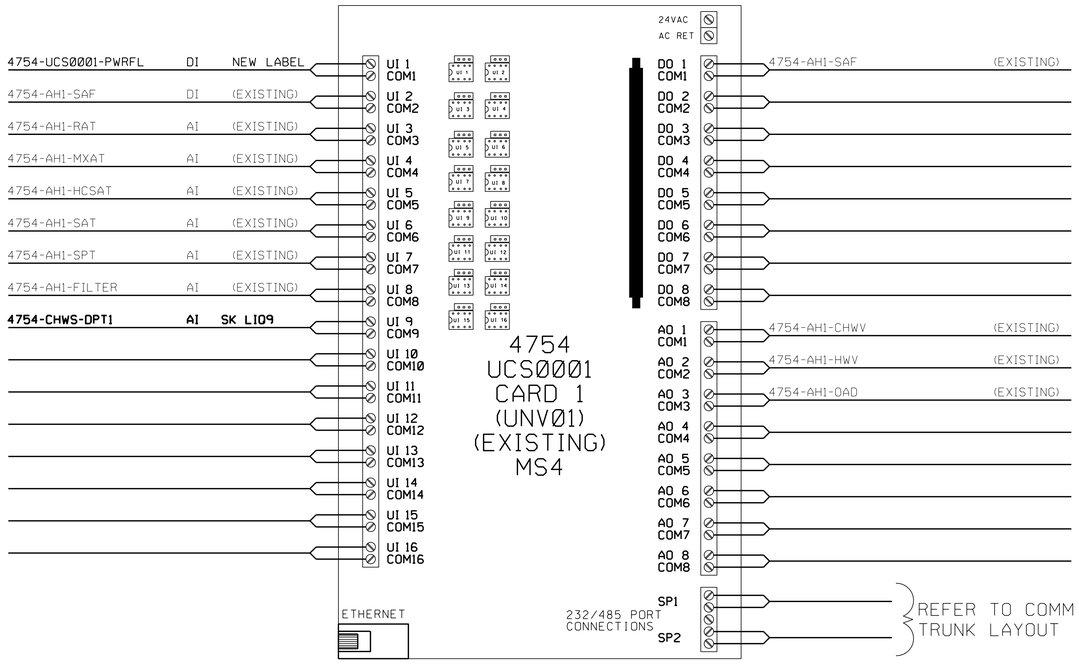

WARNING

DO NOT SCALE THIS DRAWING

THIS DRAWING WAS DESIGNED TO BE PRINTED AT A NASA SHEET SIZE: MSFC STD. SIZE 40" X 28"

PRELIMINARY CADD DWG.

CHANGES TO THIS DRAWING SHALL BE MADE ON CADD ONLY.

3426839 02-06-13 DGB

LATEST CADD UPDATE: 10-24-13 3:30 PM

BY: DUSTIN BORDER

REV.	BY	DATE	REVISION	C.I. NO.	APPROVED

Marshall Space Flight Center
Huntsville, Alabama 35812

WORK REQUEST NO. 3426839

BUILDING 4755

HVAC RENOVATION

UCS0005 AND 4754-UCS0001 NEW WIRING DETAILS

BASE BID

AE FIRM: KAYA Associates, Inc.

NASA AE CONTRACT NO. NAS8- NNM11AA39C

SUBMITTED: | APPROVAL RECOMMENDED: AD22 PROJECT A/E | APPROVED:

AE: DATE: | APPROVAL RECOMMENDED: AD22 SUPPORT A/E | AB22 GROUP LEAD DATE:

DESIGNED D. BORDER
DRAWN D. BORDER
CHECKED J. PAGE

APPROVAL RECOMMENDED: KAYA Associates, Inc.

SCALE: AS NOTED | SPEC. NO. FAC M5057

DRAWING NO. FAC-DA-4755-UCS32

SHEET OF

SIGNATURES ON INDEX SHEET INDICATE ACCEPTANCE OF THIS SHEET

REF. NO. UCS32 OF 40

MSFC-FORM 232 REV. 8-21-89-RCL

N:*DesignProjects*4755*DA-Mech. CoF*UCS32.dgn

MSFC Master Bid Disk 03-26-2014

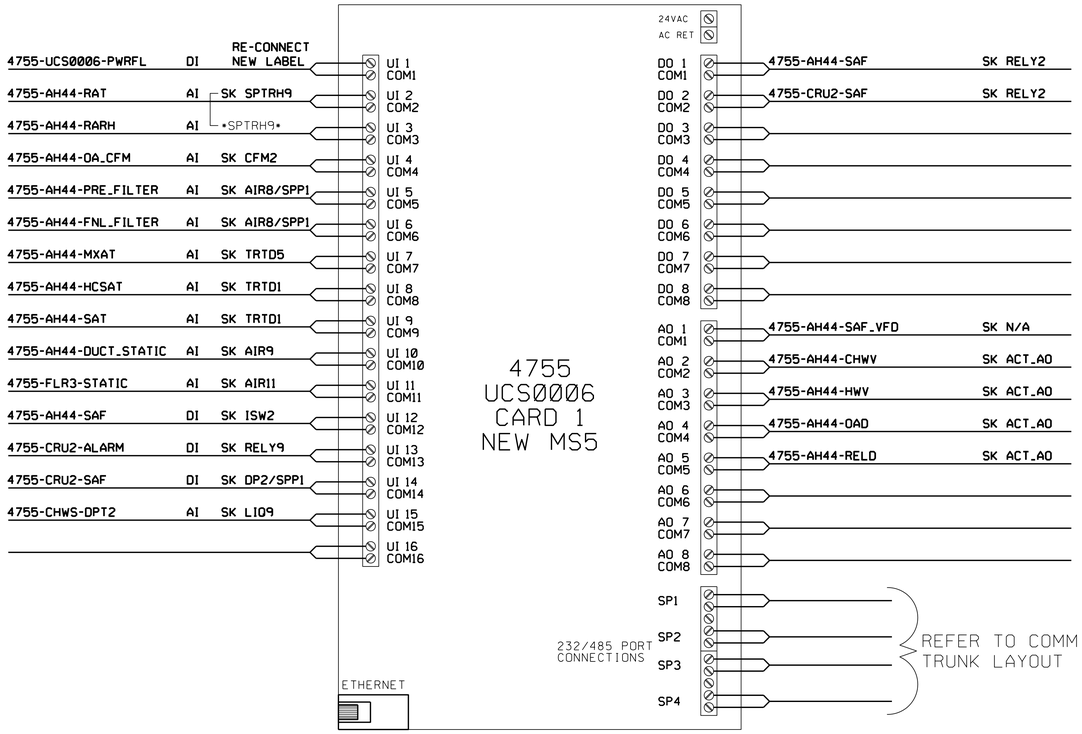

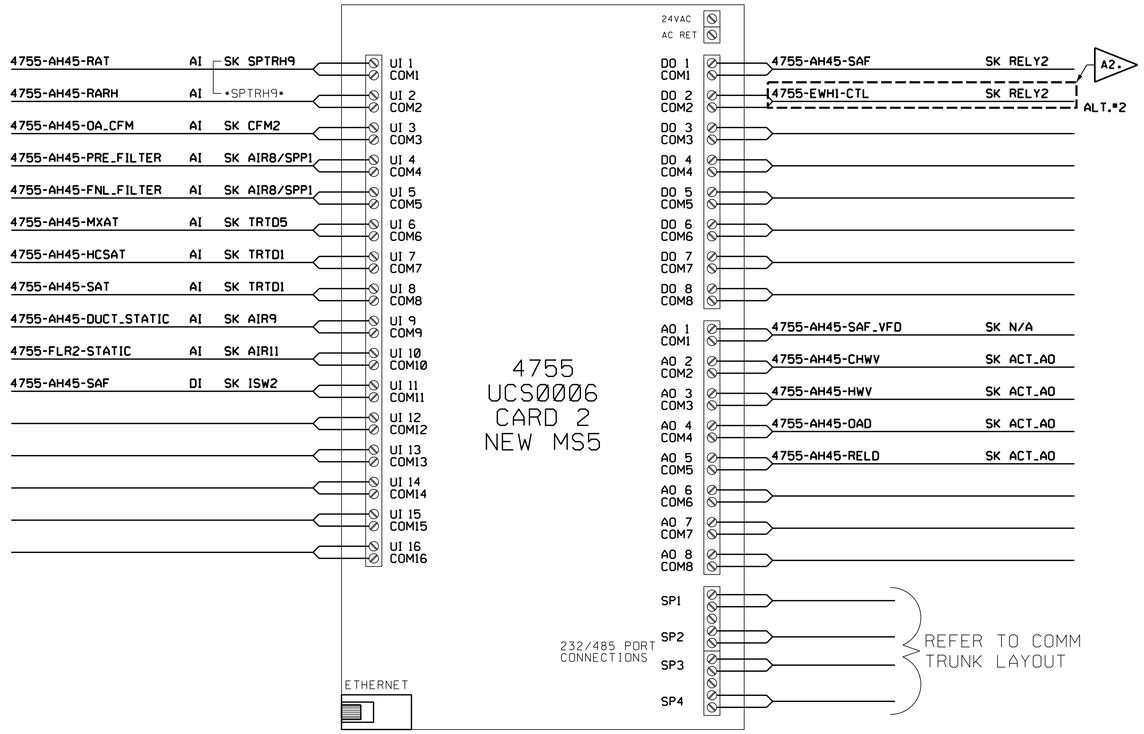

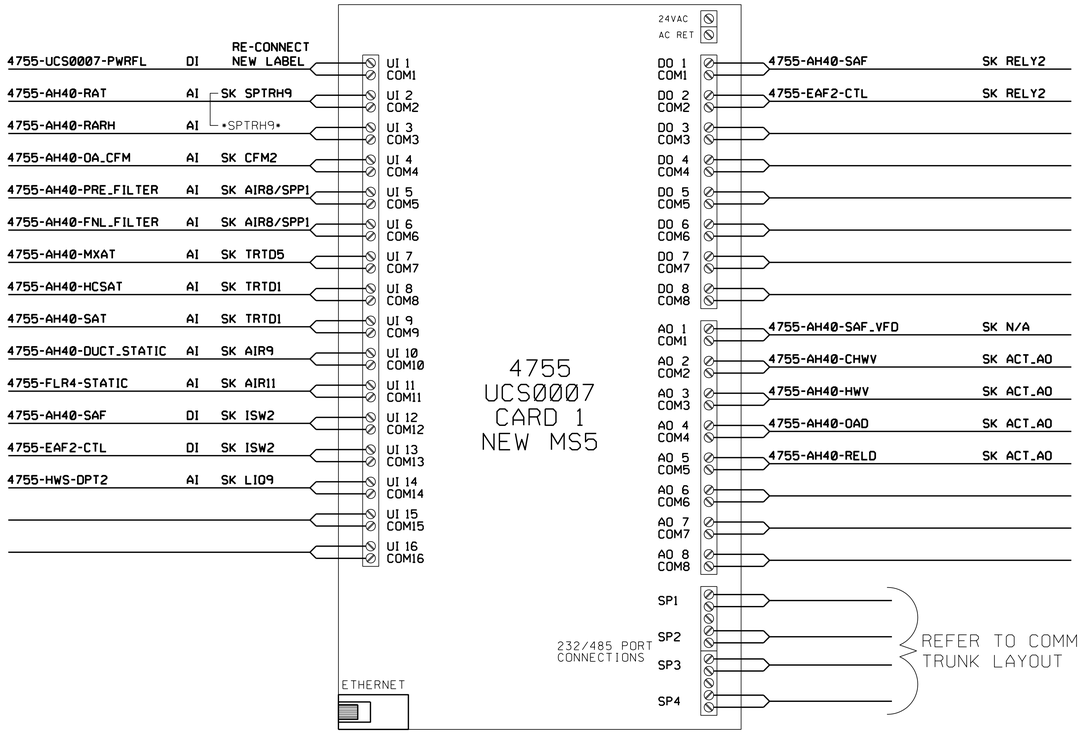

ADD ALT.#2 UCS FLAG NOTES:

A2. FURNISH AND INSTALL NEW UCS I/O POINTS. FIELD DEVICES. WIRING AND CONDUIT FOR NEW DOMESTIC GAS WATER HEATER AS SHOWN.

WARNING

DO NOT SCALE THIS DRAWING

THIS DRAWING WAS DESIGNED TO BE PRINTED AT A NASA SHEET SIZE: MSFC STD. SIZE 40" X 28"

PRELIMINARY CADD DWG.

CHANGES TO THIS DRAWING SHALL BE MADE ON CADD ONLY.

3426839 02-06-13 DGB LATEST CADD UPDATE: 10-24-13 3:30 PM BY: DUSTIN BORDER

REV.	BY	DATE	REVISION	C.I. NO.	APPROVED

Marshall Space Flight Center
Huntsville, Alabama 35812

WORK REQUEST NO. 3426839

BUILDING 4755

HVAC RENOVATION

UCS0006 AND UCS0007 NEW WIRING DETAILS

BASE BID & ALT.#2

AE FIRM: KAYA Associates, Inc.

NASA AE CONTRACT NO. NAS8- NNM11AA39C

SUBMITTED: | APPROVAL RECOMMENDED: AD22 PROJECT A/E | APPROVED:

AE: DATE: | APPROVAL RECOMMENDED: AD22 SUPPORT A/E | AB22 GROUP LEAD DATE:

DESIGNED D. BORDER
DRAWN D. BORDER
CHECKED J. PAGE

APPROVAL RECOMMENDED: KAYA Associates, Inc.

SCALE: AS NOTED | SPEC. NO. FAC M5057

DRAWING NO. FAC-DA-4755-UCS33

SHEET OF

SIGNATURES ON INDEX SHEET INDICATE ACCEPTANCE OF THIS SHEET

REF. NO. UCS33 OF 40

MSFC-FORM 232 REV. 8-21-89-RCL

N:*DesignProjects*4755*DA-Mech. CoF*UCS33.dgn

MSFC Master Bid Disk 03-26-2014

MS54_A

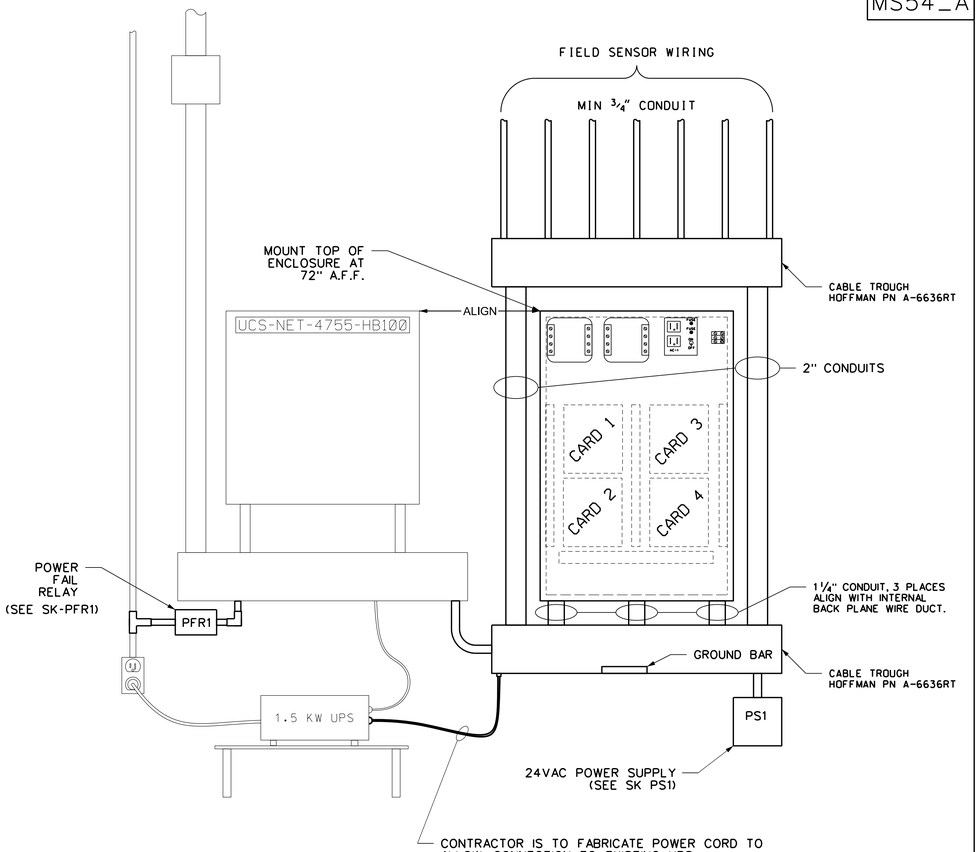

MICRO-SCAN5 4-CARD UCS PANEL

THE NEW MICROSCAN PANEL SHALL CONSIST OF THE FOLLOWING ITEMS:

PART NUMBER	PART NAME	QTY REQ'D
MS5-UNV-PNL4	MICROSCAN CONTROLLER ENCLOSURE W/ POWER SUPPLY	1
MS5-UNV-T-E	MICROSCAN CONTROLLER CARD	PER DESIGN
A-6636RT	CABLE TROUGH, 6" x 6" x 36"	2

CABLE TROUGH IS AVAILABLE FROM HOFFMAN PH# 763-422-2211

MICRO-SCAN PRODUCTS ARE AVAILABLE FROM DORSETT'S INC. PH# 336-679-2126

MS54

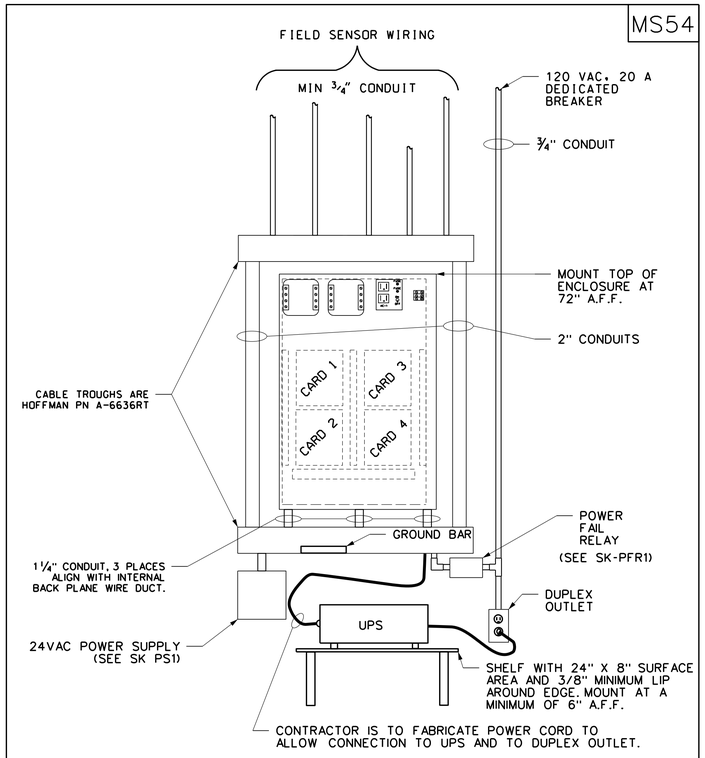

MICRO-SCAN5 4-CARD UCS PANEL

THE NEW MICROSCAN PANEL SHALL CONSIST OF THE FOLLOWING ITEMS:

PART NUMBER	PART NAME	QTY REQ'D
MS5-UNV-PNL4	MICROSCAN CONTROLLER ENCLOSURE W/ POWER SUPPLY	1
MS5-UNV-T-E	MICROSCAN CONTROLLER CARD	PER DESIGN
A-6636RT	CABLE TROUGH, 6" x 6" x 36"	2

CABLE TROUGH IS AVAILABLE FROM HOFFMAN PH# 763-422-2211

MICRO-SCAN PRODUCTS ARE AVAILABLE FROM DORSETT'S INC. PH# 336-679-2126

PFR1

POWER FAIL MONITOR RELAY

INSTALL DUPLEX OUTLET AND POWER FAIL RELAY AT EACH MICROSCAN UCS PANEL LOCATION

POWER FAIL RELAY SHALL BE A MULTI-VOLTAGE CONTROL RELAY WITH ENCLOSURE, MODEL MR101C. KELE & ASSOC. PH# 888-397-5353

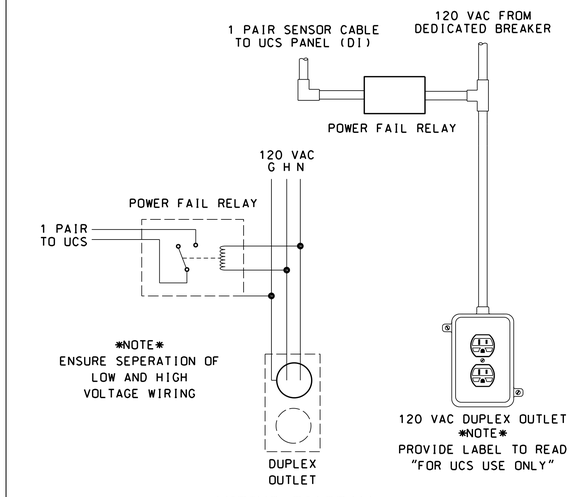

WIRING DIAGRAM

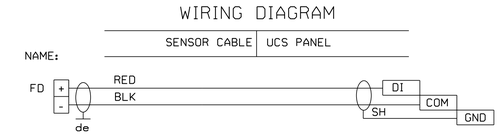

PS1

24 VAC POWER SUPPLY W/ENCLOSURE

TECHNICAL DATA

OUTPUT
- VOLTAGE: 24 VAC
- CURRENT: 4.0A, 96 VA

INPUT
- VOLTAGE: 115 VAC, 60 Hz
- CURRENT: 6.0A MAX

CONVENIENCE OUTLET: 115 VAC, 5.0A MAX
OPERATING TEMPERATURE: -13 TO 140°F
ENCLOSURE: METAL WITH 1/2" K.O.'S
- DIMENSIONS: 6.12"H X 5.19"W X 4.12"D

POWER SUPPLY SHALL BE KELE & ASSOC PART NUMBER T-PB202-1. PH# 888-397-5353.
USE THE UCS PANEL DEDICATED 120VAC CIRCUIT FOR PRIMARY POWER TO THE POWER SUPPLY.

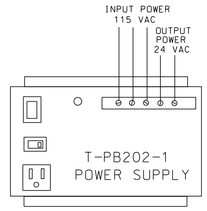

ACT_AO

TYPICAL ACTUATOR WIRING DETAIL

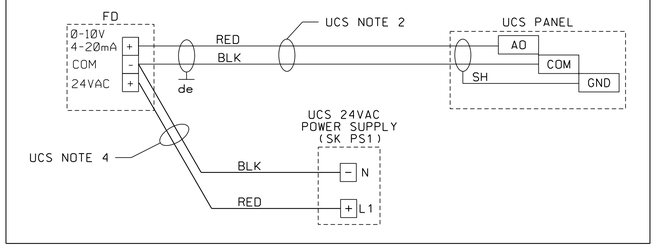

WARNING

DO NOT SCALE THIS DRAWING

THIS DRAWING WAS DESIGNED TO BE PRINTED AT A NASA SHEET SIZE: MSFC STD. SIZE 40" X 28"

PRELIMINARY CADD DWG.

CHANGES TO THIS DRAWING SHALL BE MADE ON CADD ONLY.

3426839 02-06-13 DGB

LATEST CADD UPDATE: 10-24-13 3:30 PM

BY: DUSTIN BORDER

REV.	BY	DATE	REVISION	C.A. NO.	APPROVED

Marshall Space Flight Center
Huntsville, Alabama 35812

WORK REQUEST NO. 3426839

BUILDING 4755

HVAC RENOVATION

UCS SK'S

BASE BID

AE FIRM: KAYA Associates, Inc.

NASA AE CONTRACT NO. NAS8- NNM11AA39C

SUBMITTED: APPROVAL RECOMMENDED: AD22 PROJECT A/E APPROVED:

AE: DATE: APPROVAL RECOMMENDED: AD22 SUPPORT A/E AB22 GROUP LEAD DATE:

DESIGNED D. BORDER
DRAWN D. BORDER
CHECKED J. PAGE

APPROVAL RECOMMENDED: KAYA Associates, Inc.

SCALE: AS NOTED SPEC. NO. FAC M5057

DRAWING NO. FAC-DA-4755-UCS34 SHEET OF

SIGNATURES ON INDEX SHEET INDICATE ACCEPTANCE OF THIS SHEET

REF. NO. UCS34 OF 40

MSFC-FORM 232 REV. 8-21-89-RCL

N:*DesignProjects*4755*DA-Mech. CoF*UCS34.dgn

MSFC Master Bid Disk 03-26-2014

MICRO-SCAN 4 VAV — MS4-VAV

TECHNICAL DATA

DIMENSIONS
8.87" x 4.88" x 2.4"

MEMORY
4kB HIGH SPEED INTERNALLY ACCESSIBLE RAM
64kB NON-VOLATILE FLASH EEPROM FOR STORING CODE AND VAV SETTINGS

PROCESSOR
25 Mhz, 8-BIT PROGRAMMABLE MICROCONTROLLER

SUPPLY VOLTAGE
24 VAC ±10% 60Hz

OUTPUTS/INPUTS
-4- DIGITAL OUTPUTS
-2- ANALOG OUTPUTS
-2- DIGITAL INPUTS
-5- ANALOG INPUTS

TEMPERATURE OPERATING RANGE
32 TO 122°F

MODEL
MODULATING ANALOG OUTPUT MODEL
MICROSCAN 4 VAV CONTROLLER WITH INTEGRATED PROPORTIONAL ACTUATOR AND 2" VELOCITY PRESSURE SENSOR

MODEL #
MS4-VAV-AO

CFM FULLY INTEGRATED SENSOR
AVAILABLE RANGES: 0-5", 0-1", 0-2"

VAV ROOM TEMPERATURE TRANSMITTER WITH SETPOINT ADJUST — TRTD8

TECHNICAL DATA

TEMPERATURE SENSOR:
- TYPE: RESISTANCE
- CALIBRATION: 1000 OHMS AT 32°F
- RANGE: 32° TO 122°F
- MATERIAL: 1000 OHM RTD, PLATINUM THIN FILM, 3.85 OHM/°C
- SETPOINT ADJUST: POTENTIOMETER
- ACCURACY:
  - SINGLE POINT: 0.1%
  - AVERAGING: 0.2%

TRANSMITTER:
- TEMPERATURE RANGE: 32° TO 122°F
- ACCURACY: ±0.5°F
- OUTPUT: 4-20mA OVER RANGE

HOUSING:
- MOUNTING: 60" A.F.F. ON WALL OVER STANDARD UTILITY BOX
- MATERIAL: NEUTRAL COLOR PLASTIC

PART NUMBER: DORSETTS, INC. 401-A-600-3-T (TEMP. RANGE 32-122°F)
PH#(336) 679-8811

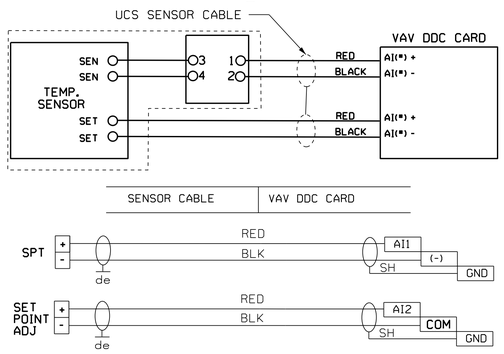

VAV SUPPLY AIR TEMPERATURE SENSOR — TRTD9

TECHNICAL DATA

SENSOR: 1000 OHM PLATINUM RTD, ±0.1% AT 32°F, .00385 TCR
PROBE MATERIAL: 1/4" O.D. 304 STAINLESS STEEL
FLANGE MATERIAL: GALVANIZED STEEL
CABLE: 2 WIRE, 6' CABLE LENGTH
TEMPERATURE RANGE: -40° TO 210°F
PROBE LENGTH: 4"

NOTE: THIS DEVICE SHALL BE A MAMAC SYSTEMS P/N TE-701-B-3-A PH# 800-843-5116.

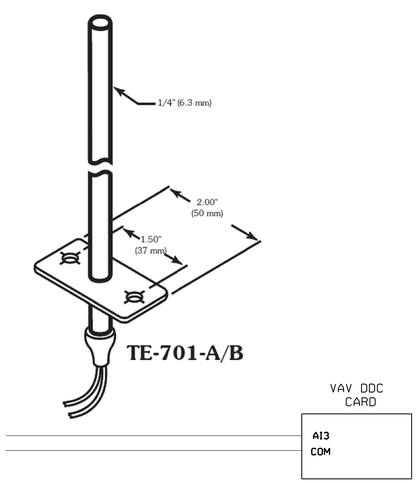

SEE SK MS4-VAV
4666-AHX-VAVXX

MS4-VAV-AO CONTROLLER

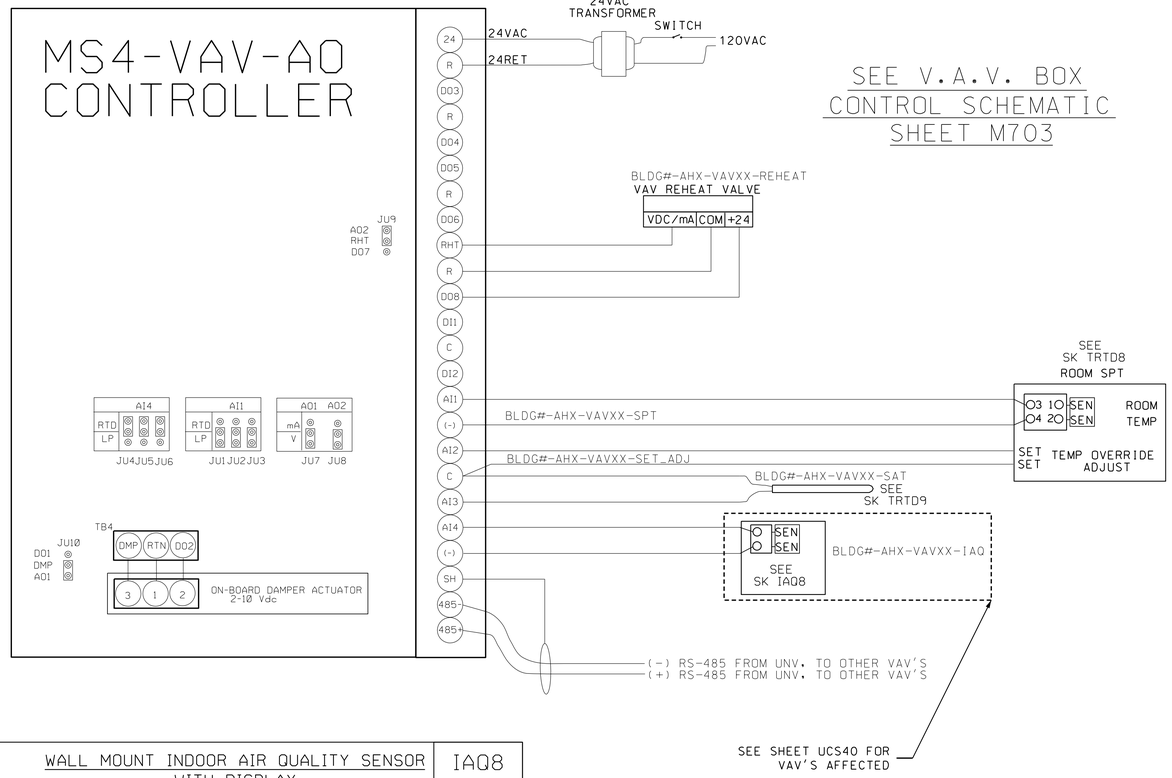

WALL MOUNT INDOOR AIR QUALITY SENSOR WITH DISPLAY — IAQ8

TECHNICAL DATA

POWER SUPPLY: 24 VAC/VDC (NOMINAL)
POWER CONSUMPTION: 2.5W
MEASURING RANGE: 0-2000 PPM CO2
ACCURACY AT 77°F: 2% OF READING ±30 PPM
LINEARITY: ±1% FS
STABILITY: ±5% FS FOR 5 YEARS
RESPONSE TIME: 1 MINUTE
OUTOUT SIGNAL: 0-10 VDC
AIRFLOW RANGE: 0-2000 FPM (0-10 MPS)
OPERATING TEMPERATURE: 23 TO 113°F

NOTE: THIS DEVICE SHALL BE A VAISALA P/N GMW21D AVAILABLE FROM KELE, PH# 888-397-5353

GMW21

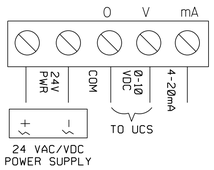

WIRING DIAGRAM

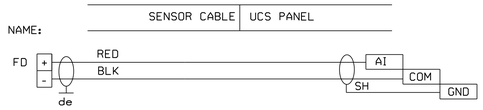

WARNING
DO NOT SCALE THIS DRAWING
THIS DRAWING WAS DESIGNED TO BE PRINTED AT A NASA SHEET SIZE: MSFC STD. SIZE 40" X 28"

PRELIMINARY CADD DWG.
CHANGES TO THIS DRAWING SHALL BE MADE ON CADD ONLY.
3426839 02-06-13 DGB
LATEST CADD UPDATE: 10-24-13 3:30 PM
BY: DUSTIN BORDER

REV.	BY	DATE	REVISION	C.I. NO.	APPROVED

Marshall Space Flight Center
Huntsville, Alabama 35812

WORK REQUEST NO. 3426839

BUILDING 4755
HVAC RENOVATION
UCS SK'S

BASE BID

AE FIRM: KAYA Associates, Inc.
NASA AE CONTRACT NO. NASB- NNM11AA39C

SUBMITTED: AE: DATE:
APPROVAL RECOMMENDED: AD22 PROJECT A/E
APPROVED: AB22 GROUP LEAD DATE:
APPROVAL RECOMMENDED: AD22 SUPPORT A/E
APPROVAL RECOMMENDED: KAYA Associates, Inc.

SIGNATURES ON INDEX SHEET INDICATE ACCEPTANCE OF THIS SHEET

DESIGNED D. BORDER
DRAWN D. BORDER
CHECKED J. PAGE
SCALE: AS NOTED
SPEC. NO. FAC M5057

REF. NO. UCS35 OF 40

DRAWING NO. FAC-DA-4755-UCS35
SHEET OF

MSFC-FORM 232 REV. 8-21-89-RCL

N:*DesignProjects*4755*DA-Mech. CoF*UCS35.dgn

MSFC Master Bid Disk 03-26-2014

DUCT MOUNT RELATIVE HUMIDITY AND TEMPERATURE TRANSMITTER — SPTRH9

TECHNICAL DATA

RELATIVE HUMIDITY PERFORMANCE:
- MEASUREMENT RANGE: 0 TO 100% RH
- OPERATING RANGE: 0 TO 100% RH
- ACCURACY AT 68°F: BETTER THAN +/-2% RH
- STABILITY: +/-2% RH OVER 2 YEARS

TEMPERATURE PERFORMANCE:
- MEASUREMENT RANGE: -4°F TO 176°F
- ACCURACY AT 77°F: +/- 0.54°F

GENERAL:
- OUTPUT SIGNAL: 4 TO 20mA

NOTE: THIS DEVICE SHALL BE A VAISALA P/N HMD60Y AVAILABLE FROM KELE, PH# 888-397-5353

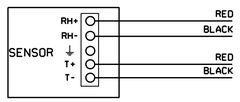

WIRING DIAGRAM

SENSOR CABLE	UCS PANEL

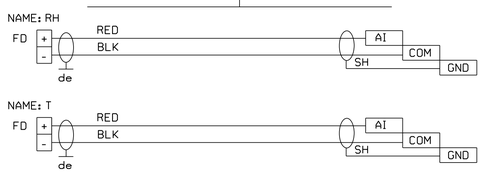

MIXED AIR DUCT TEMPERATURE TRANSMITTER — TRTD5

TECHNICAL DATA

MINCO MODEL #: S456PEY(U)/TT111PE1AC
TRANSMITTER RANGE: 0° TO 200°F
OUTPUT: 4-20 mA OVER RANGE, LINEAR WITH TEMPERATURE
CALIBRATION ACCURACY: ± 0.1% OF SPAN
ADJUSTMENTS: ZERO AND SPAN ± 5% OF SPAN, FACTORY-SET
ENCLOSURE DIMENSIONS: 2.12"W X 4"H X 1.75"D

TRANSMITTER & RTD ARE AVAILABLE FROM MINCO PRODUCTS PH# 763-571-3121
TRANSMITTER IS TO BE USED WITH 100 OHM PLATINUM RTD SENSOR
MODEL # S457PEY(U) U=PROBE LENGTH IN FEET
RTD LENGTH SHALL BE SUFFICIENT TO FORM A MINIMUM OF 4 DUCT WIDTH PASSES
BENDABLE AVERAGING SENSOR, MINIMUM BEND RADIUS OF 4"

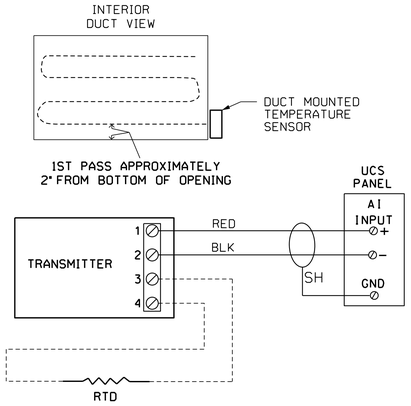

WIRING DIAGRAM

SENSOR CABLE	UCS PANEL

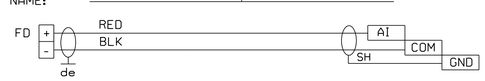

AIR DUCT TEMPERATURE TRANSMITTER — TRTD1

TECHNICAL DATA

MINCO MODEL #: S456PEY(U)/TT111PE1AC
TRANSMITTER RANGE: 0° TO 200°F
OUTPUT: 4-20 mA OVER RANGE, LINEAR WITH TEMPERATURE
CALIBRATION ACCURACY: ± 0.1% OF SPAN
ADJUSTMENTS: ZERO AND SPAN ± 5% OF SPAN, FACTORY-SET
ENCLOSURE DIMENSIONS: 2.12"W X 4"H X 1.75"D

TRANSMITTER & RTD ARE AVAILABLE FROM MINCO PRODUCTS PH# 763-571-3121
TRANSMITTER IS TO BE USED WITH 100 OHM PLATINUM RTD SENSOR
MODEL # S456PEY(U) U=PROBE LENGTH IN INCHES
RTD LENGTH SHALL BE 2/3 OF DUCT WIDTH
RIGID AVERAGING SENSOR

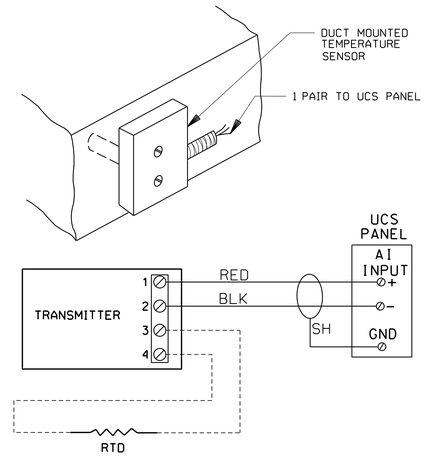

WIRING DIAGRAM

SENSOR CABLE	UCS PANEL

ROOM TEMPERATURE TRANSMITTER — TRTD2

TECHNICAL DATA

MINCO MODEL #: S473PDY4K1/TT115PD1N
TRANSMITTER RANGE: 32° TO 122°F
OUTPUT: 4-20 mA OVER RANGE, LINEAR WITH TEMPERATURE
CALIBRATION ACCURACY: ± 0.1% OF SPAN
ADJUSTMENTS: ZERO AND SPAN ± 5% OF SPAN, FACTORY-SET
ENCLOSURE DIMENSIONS: 2.75"W X 4.5"H X 1.56"D

TRANSMITTER & RTD ARE AVAILABLE FROM MINCO PRODUCTS PH# 763-571-3121

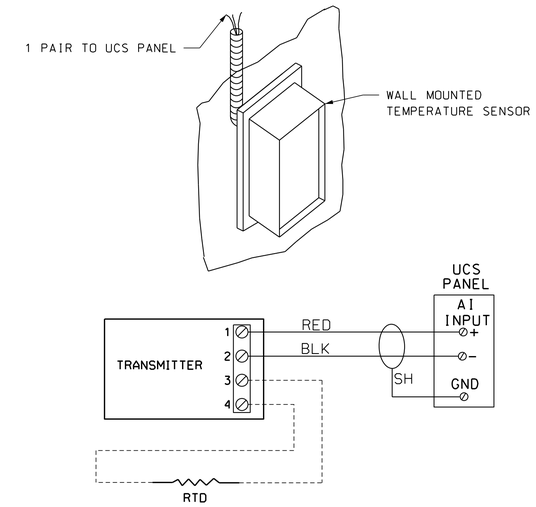

WIRING DIAGRAM

SENSOR CABLE	UCS PANEL

MAINTAINED START CIRCUIT — RELY2

SPECIFICATION FOR CONTROL RELAY

TYPE: SPDT MULTIVOLTAGE RELAY WITH ENCLOSURE
COIL VOLTAGES: 24VAC/115VAC/230VAC
CONTACT RATING: 10A @ 115VAC, 7A @ 230VAC
ENCLOSURE DIMENSIONS: 5.13"H X 3.13"W X 2.5"D

NOTE: THIS RELAY SHALL BE KELE P/N MR-101/C
PH# 888-397-5353

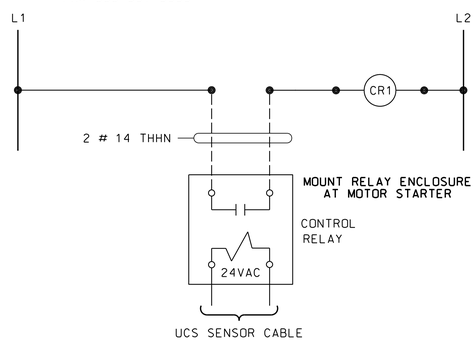

WIRING DIAGRAM

SENSOR CABLE	UCS PANEL

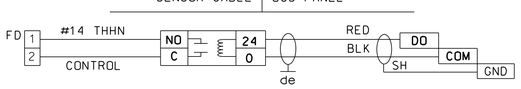

CURRENT OPERATED SWITCH — ISW2

TECHNICAL DATA

CURRENT RANGE: .75-150 AMPS
TYPE: SPLIT CORE
THRESHOLD: FIXED, .75 AMPS
MAX SENSE VOLTAGE: 600 VAC
SWITCH: SOLID STATE, SPST: 30 VAC/DC
OUTPUT: 0.4 AMPS MAX
OPERATING TEMPERATURE: -30 TO 140°F
LED: OVER TRIP POINT

NOTE: THIS DEVICE SHALL BE A FUNCTIONAL DEVICES INC. P/N RIBXGTFL
PH# 800-888-5538 OR sales@FunctionalDevices.com

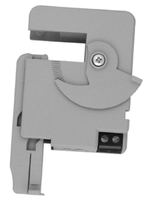

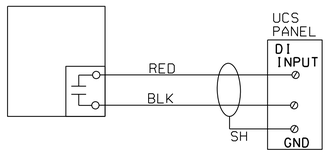

WIRING DIAGRAM

SENSOR CABLE	UCS PANEL

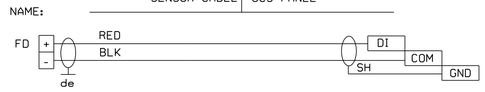

BINARY STATUS INPUT FROM FIELD DEVICE DRY CONTACTS — RELY9

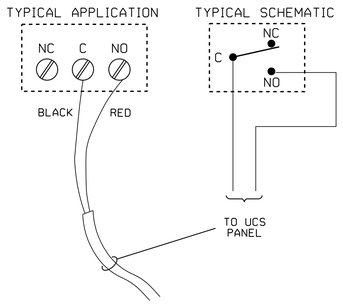

SENSOR CABLE	UCS PANEL

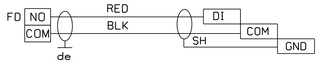

WARNING
DO NOT SCALE THIS DRAWING
THIS DRAWING WAS DESIGNED TO BE PRINTED AT A NASA SHEET SIZE: MSFC STD. SIZE 40" X 28"

PRELIMINARY CADD DWG.
CHANGES TO THIS DRAWING SHALL BE MADE ON CADD ONLY.
3426839 02-06-13 DGB — LATEST CADD UPDATE: 10-24-13 3:30 PM — BY: DUSTIN BORDER

REV.	BY	DATE	REVISION	C.I. NO.	APPROVED

Marshall Space Flight Center
Huntsville, Alabama 35812

WORK REQUEST NO. 3426839

BUILDING 4755

HVAC RENOVATION
UCS SK'S

BASE BID

AE FIRM: KAYA Associates, Inc.
NASA AE CONTRACT NO. NASA- NNM11AA39C

SUBMITTED: AE: DATE:
APPROVAL RECOMMENDED: AD22 PROJECT A/E
APPROVAL RECOMMENDED: AD22 SUPPORT A/E
APPROVAL RECOMMENDED: KAYA Associates, Inc.
APPROVED: AD22 GROUP LEAD DATE:

DESIGNED D. BORDER
DRAWN D. BORDER
CHECKED J. PAGE
SCALE: AS NOTED
SPEC. NO. FAC M5057

SIGNATURES ON INDEX SHEET INDICATE ACCEPTANCE OF THIS SHEET

REF. NO. UCS36 OF 40

DRAWING NO. FAC-DA-4755-UCS36
SHEET OF

MSFC-FORM 232 REV. 8-21-89-RCL

N:*DesignProjects*4755*DA-Mech. CoF*UCS36.dgn

MSFC Master Bid Disk 03-26-2014

FILTER DIFFERENTIAL PRESSURE TRANSDUCER — AIR8

TECHNICAL DATA

PRESSURE RANGE: 2R5 = 0-2.5
UNITS: in.WC
TYPE: UNIDIRECTIONAL
OUTPUT: 4-20mA
PRESSURE FITTING: 3/16" BARBED BRASS
ELEC. TERMINATION: 1/2" CONDUIT OPENING AND TERMINAL STRIP
ACCURACY: ±0.25% FS

NOTE: THIS DEVICE SHALL BE A SETRA P/N 2641-2R5WD-11-A1-F
PH# 800-257-3872

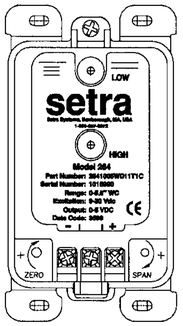

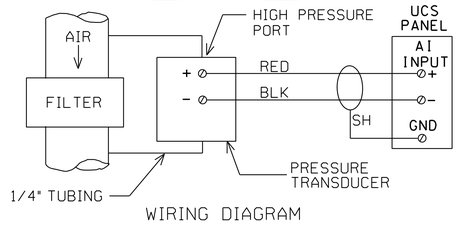

WIRING DIAGRAM

NAME:	SENSOR CABLE	UCS PANEL

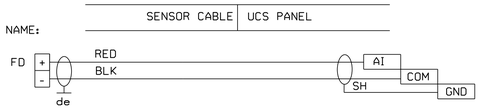

DUCT STATIC PRESSURE TRANSDUCER — AIR9

TECHNICAL DATA

PRESSURE RANGE: 005 = 0-5 ±5
UNITS: in.WC
TYPE: UNIDIRECTIONAL
OUTPUT: 4-20mA
PRESSURE FITTING: STATIC DUCT PROBE
ELEC. TERMINATION: 1/2" CONDUIT OPENING
ACCURACY: ±0.5% FS
DISPLAY: 3 1/2 DIGIT LCD

NOTE: THIS DEVICE SHALL BE A SETRA P/N 2671-005WD-11-AP-H-D
PH# 800-257-3872

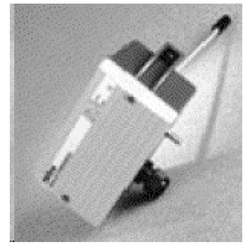

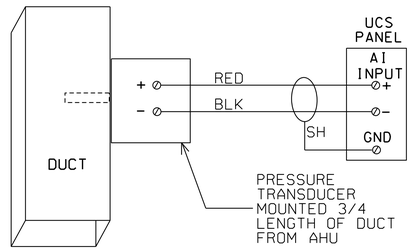

WIRING DIAGRAM

NAME:	SENSOR CABLE	UCS PANEL

ROOM STATIC PRESSURE TRANSDUCER — AIR11

TECHNICAL DATA

PRESSURE RANGE: P1IWL = ±0.10
UNITS: in.WC
TYPE: BIDIRECTIONAL
OUTPUT: 4-20mA
PRESSURE FITTING: 1/4" BARBED STAINLESS STEEL
ELEC. TERMINATION: SCREW TERMINAL STRIP
ACCURACY: 0.25%, ±0.015% FS/°F

NOTE: THIS DEVICE SHALL BE A ASHCROFT P/N XL-3-MB2-42-ST-P1IWL
PH# 203-385-0217

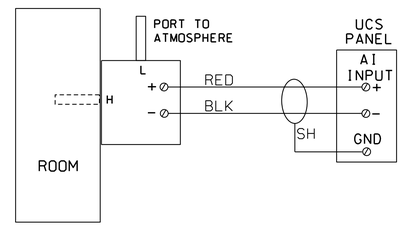

WIRING DIAGRAM

NAME:	SENSOR CABLE	UCS PANEL

LOW DIFFERENTIAL PRESSURE SWITCH — DP2

TECHNICAL DATA

MEDIA: AIR AND NON-COMBUSTIBLE GASES
OPERATING PRESSURE RANGE: 0.15 TO 0.55 in WC
PRESSURE LIMIT: 45 in WC CONTINUOUS, 10 PSIG SURGE
TEMPERATURE LIMIT: -30 TO 180°F
REPEATABILITY: ±3%
PROCESS CONNECTION: 1/8" FEMALE NPT
SWITCH TYPE: SPDT
CONTACT RATING: 15A @ 120-480 VAC RESISTIVE
ELECTRICAL CONNECTION: 1/2" FEMALE NPT
ELECTRICAL TERMINATION: SCREW TYPE
SET POINT ADJUST: SCREW TYPE INSIDE ENCLOSURE
MOUNTING ORIENTATION: DIAPHRAGM VERTICAL
HOUSING: ATEX COMPLIANT

NOTE: THIS DEVICE SHALL BE A DWYER P/N 1911-0-CN
PH# 219-879-8000

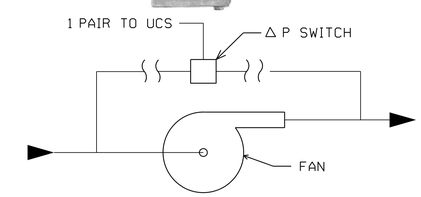

SCHEMATIC DIAGRAM

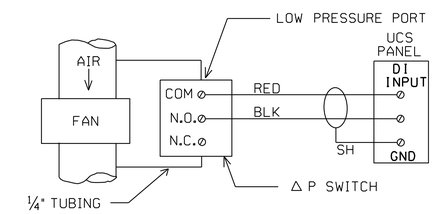

WIRING DIAGRAM

NAME:	SENSOR CABLE	UCS PANEL

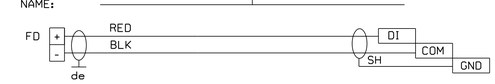

STATIC PRESSURE PROBE — SPP1

TECHNICAL DATA

MATERIAL: 6061T-6 ALUMINUM ALLOY
PORT CONNECTION: 1/4" BRASS HOSE BARB
GASKET MATERIAL: NEOPRENE
MAXIMUM PRESSURE: 10 PSIG
MAXIMUM TEMPERATURE: 482°F
MAXIMUM AIRFLOW: UNLIMITED
PROBE LENGTH: 8"

INSTALLATION:
DRILL 1/4" HOLE IN SHEET METAL AND INSERT PROBE. USING SUPPLIED TEMPLATE TO PROPERLY POSITION PROBE, MARK AND DRILL TWO FLANGE MOUNTING SCREW HOLES. SECURE PROBE USING TWO SELF-TAPPING SHEET METAL SCREWS.

NOTE: THIS DEVICE SHALL BE A MAMAC SYSTEMS P/N A-520-2-A-1
PH# 800-843-5116

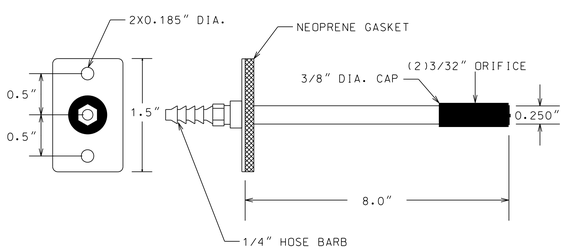

WARNING
DO NOT SCALE THIS DRAWING
THIS DRAWING WAS DESIGNED TO BE PRINTED AT A NASA SHEET SIZE: MSFC STD. SIZE 40" X 28"

PRELIMINARY CADD DWG.
CHANGES TO THIS DRAWING SHALL BE MADE ON CADD ONLY.
3426839 02-06-13 DGB
LATEST CADD UPDATE: 10-24-13 3:30 PM
BY: DUSTIN BORDER

REV.	BY	DATE	REVISION	C.I. NO.	APPROVED

Marshall Space Flight Center
Huntsville, Alabama 35812

WORK REQUEST NO. 3426839

BUILDING 4755

HVAC RENOVATION
UCS SK'S

BASE BID

AE FIRM: KAYA Associates, Inc.
NASA AE CONTRACT NO. NAS8- NNM11AA39C

SUBMITTED: | APPROVAL RECOMMENDED: AD22 PROJECT A/E | APPROVED:
AE: DATE: | APPROVAL RECOMMENDED: AD22 SUPPORT A/E | AD22 GROUP LEAD DATE:
DESIGNED D. BORDER
DRAWN D. BORDER
CHECKED J. PAGE | APPROVAL RECOMMENDED: KAYA Associates, Inc.
SCALE: AS NOTED | SPEC. NO. FAC M5057

SIGNATURES ON INDEX SHEET INDICATE ACCEPTANCE OF THIS SHEET

REF. NO. UCS37 OF 40

DRAWING NO. FAC-DA-4755-UCS37
SHEET OF

MSFC-FORM 232 REV. 8-21-89-RCL

N:*DesignProjects*4755*DA-Mech. CoF*UCS37.dgn

MSFC Master Bid Disk 03-26-2014

LIQUID DIFFERENTIAL PRESSURE TRANSMITTER — LIQ9

TECHNICAL DATA

MEDIA: LIQUIDS OR GASES COMPATIBLE WITH 17-4 PH STAINLESS STEEL
OPERATING PRESSURE RANGES: SHALL BE DETERMINED PER DESIGN
UNIDIRECTIONAL: 0 TO 100 PSI
MAXIMUM LINE PRESSURE: 250 PSI
ACCURACY: ±0.25% FS
NON-LINEARITY: ±0.20% FS
HYSTERESIS: 0.10% FS
NON-REPEATABILITY: 0.05% FS
THERMAL EFFECTS: ZERO/SPAN SHIFT 2.0% FS/°F
COMPENSATED TEMPERATURE: 30 TO 150°F
OPERATING TEMPERATURE: 0 TO 175°F
PROCESS CONNECTION: 1/4" FEMALE NPT
ELECTRICAL CONNECTION: 1/2" K.O. OPENING
ELECTRICAL TERMINATION: TERMINAL BLOCK
SIGNAL OUTPUT: 4-20 mA
CASE: STAINLESS STEEL/ALUMINUM NEM4/IP65

NOTE: THIS ASSEMBLY SHALL BE A PRODUCT OF SETRA, P/N 2301-XXXXX-2F-11-B-C
SETRA PH# 800-257-3872

INSTALLATION DIAGRAM

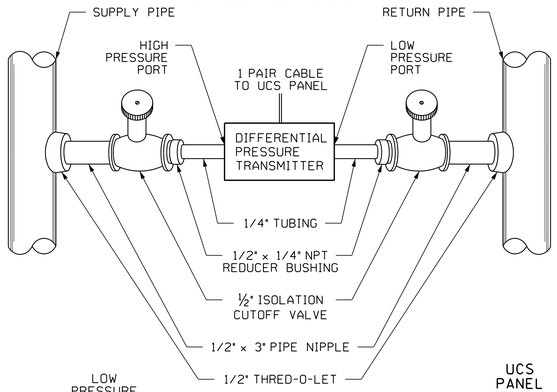

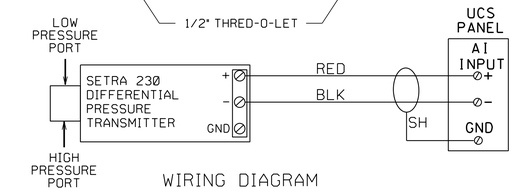

WIRING DIAGRAM

SENSOR CABLE	UCS PANEL

NAME:

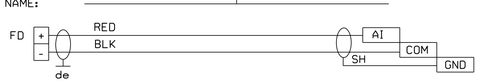

•COORDINATE WITH MECHANICAL ENGINEER TO DETERMINE PRESSURE RANGE•

0/1.0 PSID=001PD	0/25.0 PSID=025PD
0/2.0 PSID=002PD	0/30.0 PSID=030PD
0/5.0 PSID=005PD	0/50.0 PSID=050PD
0/10.0 PSID=010PD	0/100.0 PSID=100PD

THERMAL DISPERSION TRANSMITTER FOR AIRFLOW MEASUREMENT — CFM2

TECHNICAL DATA

SYSTEM:
CALIBRATED RANGE: 0 TO 5,000 FPM
OPERATING TEMPERATURE: PROBE: -20 TO 160°F
TRANSMITTER: -20 TO 120°F
POWER REQUIREMENTS: 24 VAC AT 12-20 VA (BASED ON SENSOR QUANTITY)
TRANSMITTER AND ENCLOSURE:
CONSTRUCTION: ALUMINUM
DIMENSIONS: 9.251" X 6.688" X 2.5" (HxWxD)
OUTPUT: 4-20mA WITH BACNET MS/TP
SENSOR AIRFLOW ACCURACY: ±2% OF READING

WIRING DIAGRAM

SENSOR CABLE	UCS PANEL

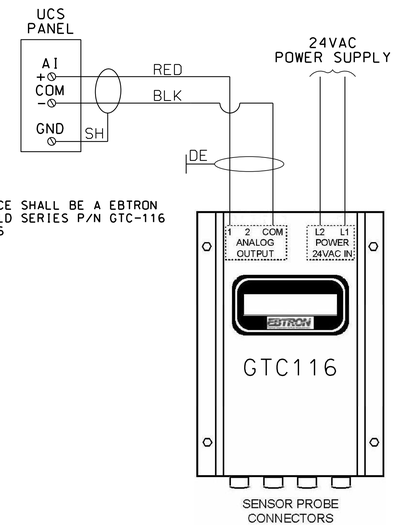

NOTE: THIS DEVICE SHALL BE A EBTRON ADVANTAGE II GOLD SERIES P/N GTC-116
PH# 800-232-8766

EBTRON ADVANTAGE GOLD SERIES GTC-116-P(X) DUCT AND PLENUM PROBES

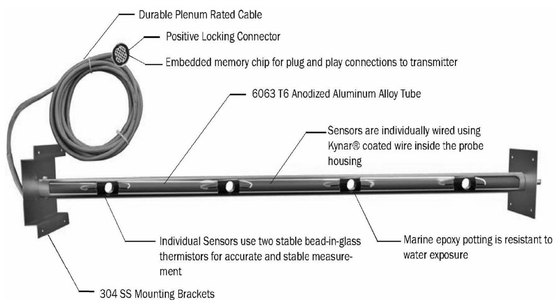

* GTC-116-P(X) X= SENSOR DENSITY *
PROBES SHALL BE SELECTED PER DESIGN

AUTOMATIC POWER TRANSFER SWITCH MONITOR — ATS1

TECHNICAL DATA

OPERATING VOLTAGE: 430-480 VAC (ADJUSTABLE)
DROP OUT VOLTAGE: 1 PHASE LOW=357-398, 3 PHASE LOW=387-432
RESPONSE TIMES: OPERATE-1.0 SECONDS, RELEASE-2.0 SECONDS
POWER REQUIRED: 3 VA (APPROX)
RESET: AUTOMATIC
INDICATOR LED: GLOWS WHEN ALL CONDITIONS ARE NORMAL
OUTPUT RATING: SPDT, 360 VA INDUCTIVE; 10 AMPS RESISTIVE @ 240 VAC
PHASE SEQUENCE: A B C (WILL NOT OPERATE C B A)
OPERATING TEMPERATURE: 32° TO +131°F

NOTE: THIS DEVICE SHALL BE A DIVERSIFIED ELECTRONICS
P/N SLA-440-ASA (PUG IN STYLE) WITH RB-08 RELAY SOCKET
PH# 800-727-5646 OR atcdiversified.com

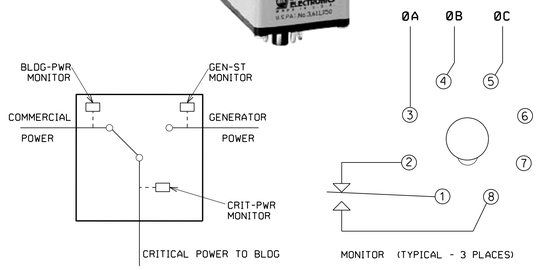

WIRING DIAGRAM

SENSOR CABLE	UCS PANEL

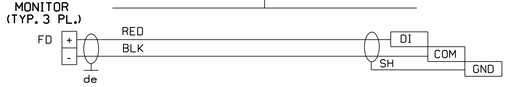

LIGHTING CONTACTOR CONTROL RELAY — RELY15

SPECIFICATION FOR CONTROL RELAY

TYPE: DPDT
COIL VOLTAGES: 24VAC/VDC
COIL INPUT CURRENT: 125 mA AT 24 VAC, 50 mA AT 242 VDC
CONTACT RATINGS:
30A RESISTIVE @ 300 VAC, 15A RESISTIVE @ 600 VAC
HOUSING: GREY PLASTIC NEMA 1 WITH 3/4" MALE NPT
DIMENSIONS: 2.3"H X 3.2"W X 1.8"D

NOTE: THIS RELAY SHALL BE
KELE P/N RIB24P30
PH# 888-397-5353
ASSEMBLY SHALL INCLUDE SK ISW2

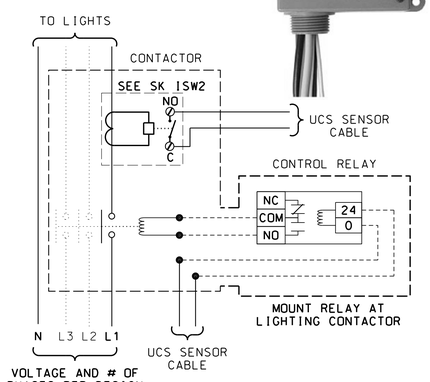

WIRING DIAGRAM

SENSOR CABLE	UCS PANEL

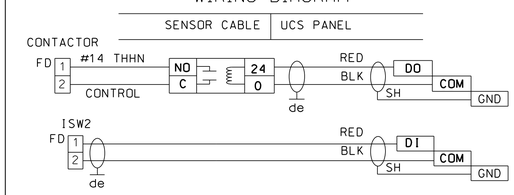

WARNING
DO NOT SCALE THIS DRAWING
THIS DRAWING WAS DESIGNED TO BE PRINTED AT A NASA SHEET SIZE: MSFC STD. SIZE 40" X 28"

PRELIMINARY CADD DWG.
CHANGES TO THIS DRAWING SHALL BE MADE ON CADD ONLY.
3426839 02-06-13 DGB
LATEST CADD UPDATE: 10-24-13 3:30 PM
BY: DUSTIN BORDER

REV.	BY	DATE	REVISION	C.I. NO.	APPROVED

Marshall Space Flight Center
Huntsville, Alabama 35812

WORK REQUEST NO. 3426839

BUILDING 4755

HVAC RENOVATION
UCS SK'S

BASE BID

AE FIRM: KAYA Associates, Inc.
NASA AE CONTRACT NO. NAS8- NNM11AA39C
SUBMITTED: APPROVAL RECOMMENDED: AD22 PROJECT A/E APPROVED:
AE: DATE: APPROVAL RECOMMENDED: AD22 SUPPORT A/E AB22 GROUP LEAD DATE:
DESIGNED D. BORDER
DRAWN D. BORDER
CHECKED J. PAGE
APPROVAL RECOMMENDED: KAYA Associates, Inc.
SCALE: AS NOTED
SPEC. NO. FAC M5057
DRAWING NO. FAC-DA-4755-UCS38
SHEET OF

SIGNATURES ON INDEX SHEET INDICATE ACCEPTANCE OF THIS SHEET
REF. NO. UCS38 OF 40

MSFC-FORM 232 REV. 8-21-89-RCL

N:*DesignProjects*4755*DA-Mech. CoF*UCS38.dgn

MSFC Master Bid Disk 03-26-2014

CHILL WATER TEMPERATURE TRANSMITTER — TRTD3

TECHNICAL DATA

MINCO MODEL #: AS5140PD(XX)Y1A1N211S2
MATERIAL:
- PROBE: STAINLESS STEEL WITH COPPER ALLOY TIP, SPRING LOADED
- CONNECTION HEAD: ALUMINUM
- THERMOWELL: 316 STAINLESS STEEL

SENSING ELEMENT: PLATINUM RTD, 100 OHM ±0.1% AT 0°C, 0.00385 TCR
TIME CONSTANT: 17 SECONDS TYPICAL IN MOVING WATER
PRESSURE RATING: 7000 PSI AT 21°C, REDUCING TO 6300 PSI AT 260°C
PROCESS CONNECTION: 1/2" MALE NPT
CONDUIT CONNECTION: 1/2" FEMALE NPT
TRANSMITTER RANGE: 0° TO 100°F
OUTPUT: 4-20 mA OVER RANGE, LINEAR WITH TEMPERATURE
CALIBRATION ACCURACY: ± 0.1% OF SPAN
ADJUSTMENTS: ZERO AND SPAN ± 5% OF SPAN, FACTORY-SET
OPERATING TEMPERATURE: -13° TO 185°F
ELECTRICAL TERMINATION: TERMINAL BLOCK

TRANSMITTER & RTD ARE AVAILABLE FROM MINCO PRODUCTS PH# 763-571-3121
TRANSMITTER IS TO BE USED WITH 100 OHM PLATINUM RTD SENSOR
MODEL # AS5140PD(XX) XX=PROBE LENGTH IN INCHES
STANDARD LENGTHS: 2.5, 4.5, 6.0, 7.5, 8.0, 10.5, 13.5, 16.5, 22.5

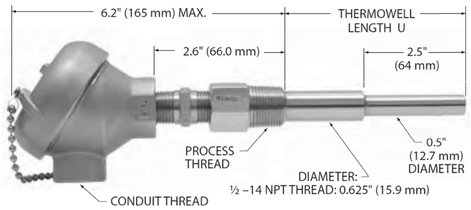

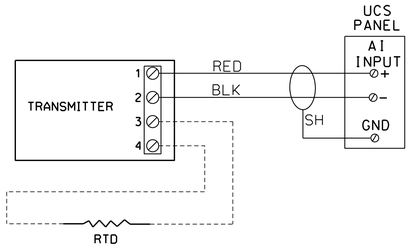

WIRING DIAGRAM

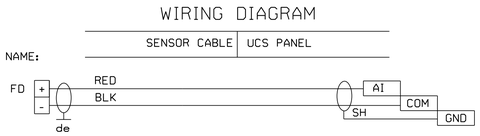

HOT WATER TEMPERATURE TRANSMITTER — TRTD4

TECHNICAL DATA

MINCO MODEL #: AS5140PD(XX)Y1A1N211EY2
MATERIAL:
- PROBE: STAINLESS STEEL WITH COPPER ALLOY TIP, SPRING LOADED
- CONNECTION HEAD: ALUMINUM
- THERMOWELL: 316 STAINLESS STEEL

SENSING ELEMENT: PLATINUM RTD, 100 OHM ±0.1% AT 0°C, 0.00385 TCR
TIME CONSTANT: 17 SECONDS TYPICAL IN MOVING WATER
PRESSURE RATING: 7000 PSI AT 21°C, REDUCING TO 6300 PSI AT 260°C
PROCESS CONNECTION: 1/2" MALE NPT
CONDUIT CONNECTION: 1/2" FEMALE NPT
TRANSMITTER RANGE: 0° TO 250°F
OUTPUT: 4-20 mA OVER RANGE, LINEAR WITH TEMPERATURE
CALIBRATION ACCURACY: ± 0.1% OF SPAN
ADJUSTMENTS: ZERO AND SPAN ± 5% OF SPAN, FACTORY-SET
OPERATING TEMPERATURE: -13° TO 185°F
ELECTRICAL TERMINATION: TERMINAL BLOCK

TRANSMITTER & RTD ARE AVAILABLE FROM MINCO PRODUCTS PH# 763-571-3121
TRANSMITTER IS TO BE USED WITH 100 OHM PLATINUM RTD SENSOR
MODEL # AS5140PD(XX) XX=PROBE LENGTH IN INCHES
STANDARD LENGTHS: 2.5, 4.5, 6.0, 7.5, 8.0, 10.5, 13.5, 16.5, 22.5

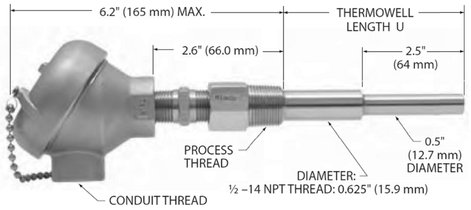

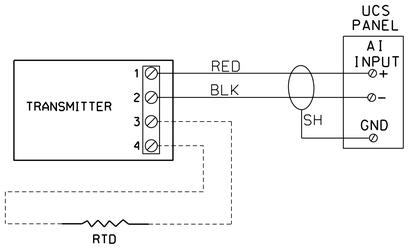

WIRING DIAGRAM

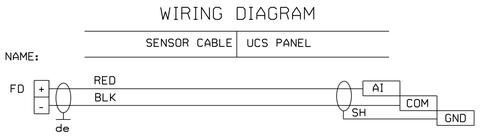

BTU METER WITH BACNET MS/TP — BTU4

TECHNICAL DATA

INPUT POWER: 24VAC, 500mA
ENCLOSURE: STEEL NEMA 13, WALL MOUNT, 8" X 10" X 4"
TEMPERATURE RANGE: 32° TO 200°F
DIFFERENTIAL TEMPERATURE ACCURACY: ±0.15°F OVER CALIBRATED RANGE
COMPUTING NONLINEARITY: WIHTIN ±0.05%

BTU METER SHALL INCLUDE INSTALLATION HARDWARE AND THE FOLLOWING OPTIONS:
- LCD DISPLAY
- BACNET MS/TP OUTPUT CARD
- TOTAL ENERGY OUTPUT CARD
- MATCHED TEMPERATURE SENSORS W/HARDWARE
- ELECTROMAGNETIC FLOW METER

NOTE: THIS DEVICE SHALL BE A ONICON INC. SYSTEM-10-BACNET MS/TP
PH# 727-447-6140

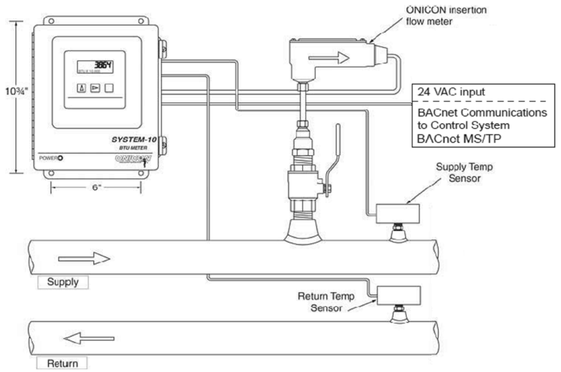

* DO NOT PENETRATE TOP OF BTU METER *

WARNING
DO NOT SCALE THIS DRAWING
THIS DRAWING WAS DESIGNED TO BE PRINTED AT A NASA SHEET SIZE: MSFC STD. SIZE 40" X 28"

PRELIMINARY CADD DWG.
CHANGES TO THIS DRAWING SHALL BE MADE ON CADD ONLY.
3426839 02-06-13 DGB
LATEST CADD UPDATE: 10-24-13 3:30 PM
BY: DUSTIN BORDER

REV.	BY	DATE	REVISION	C.I. NO.	APPROVED

Marshall Space Flight Center
Huntsville, Alabama 35812

WORK REQUEST NO. 3426839

BUILDING 4755

HVAC RENOVATION
UCS SK'S

BASE BID

AE FIRM: KAYA Associates, Inc.
NASA AE CONTRACT NO. NASS-: NNM11AA39C

SIGNATURES ON INDEX SHEET INDICATE ACCEPTANCE OF THIS SHEET

REF. NO. UCS39 OF 40

SUBMITTED: | APPROVAL RECOMMENDED: | APPROVED:
AD22 PROJECT A/E | AE: | DATE:
APPROVAL RECOMMENDED: | AB22 GROUP LEAD | DATE:
AD22 SUPPORT A/E
APPROVAL RECOMMENDED: KAYA Associates, Inc.
DESIGNED D. BORDER
DRAWN D. BORDER
CHECKED J. PAGE
SCALE: AS NOTED
SPEC. NO. FAC M5057

DRAWING NO. FAC-DA-4755-UCS39
SHEET OF

MSFC-FORM 232 REV. 8-21-89-RCL

N:*DesignProjects*4755*DA-Mech. CoF*UCS39.dgn

MSFC Master Bid Disk 03-26-2014

VAV CROSS REFERENCE TABLE

4755-AH0018

UCS ID	MECHANICAL ID	NOTE(S)
4755-AH18-VAV01	4755-VAV0008	
4755-AH18-VAV02	4755-VAV0009	
4755-AH18-VAV03	4755-VAV0010	
4755-AH18-VAV04	4755-VAV0007	
4755-AH18-VAV05	4755-VAV0006	
4755-AH18-VAV06	4755-VAV0005	IAQ SENSOR
4755-AH18-VAV07	4755-VAV0004	
4755-AH18-VAV08	4755-VAV0003	
4755-AH18-VAV09	4755-VAV0002	
4755-AH18-VAV10	4755-VAV0011	
4755-AH18-VAV11	4755-VAV0012	
4755-AH18-VAV12	4755-VAV0001	

4755-AH0045

UCS ID	MECHANICAL ID	NOTE(S)
4755-AH45-VAV01	4755-VAV0019	
4755-AH45-VAV02	4755-VAV0013	
4755-AH45-VAV03	4755-VAV0014	
4755-AH45-VAV04	4755-VAV0015	
4755-AH45-VAV05	4755-VAV0016	
4755-AH45-VAV06	4755-VAV0020	
4755-AH45-VAV07	4755-VAV0017	IAQ SENSOR
4755-AH45-VAV08	4755-VAV0021	
4755-AH45-VAV09	4755-VAV0018	
4755-AH45-VAV10	4755-VAV0023	
4755-AH45-VAV11	4755-VAV0022	
4755-AH45-VAV12	4755-VAV0025	
4755-AH45-VAV13	4755-VAV0024	
4755-AH45-VAV14	4755-VAV0027	
4755-AH45-VAV15	4755-VAV0030	
4755-AH45-VAV16	4755-VAV0028	
4755-AH45-VAV17	4755-VAV0029	
4755-AH45-VAV18	4755-VAV0026	

4755-AH0044

UCS ID	MECHANICAL ID	NOTE(S)
4755-AH44-VAV01	4755-VAV0034	
4755-AH44-VAV02	4755-VAV0031	
4755-AH44-VAV03	4755-VAV0035	
4755-AH44-VAV04	4755-VAV0032	
4755-AH44-VAV05	4755-VAV0036	
4755-AH44-VAV06	4755-VAV0037	
4755-AH44-VAV07	4755-VAV0038	
4755-AH44-VAV08	4755-VAV0039	
4755-AH44-VAV09	4755-VAV0033	
4755-AH44-VAV10	4755-VAV0040	
NOT USED	4755-VAV0041	NOT USED
4755-AH44-VAV11	4755-VAV0042	
4755-AH44-VAV12	4755-VAV0043	
NOT USED	4755-VAV0044	NOT USED
NOT USED	4755-VAV0045	NOT USED
4755-AH44-VAV13	4755-VAV0046	
NOT USED	4755-VAV0047	NOT USED
4755-AH44-VAV14	4755-VAV0064	
4755-AH44-VAV15	4755-VAV0063	IAQ SENSOR
4755-AH44-VAV16	4755-VAV0060	
4755-AH44-VAV17	4755-VAV0062	
4755-AH44-VAV18	4755-VAV0061	

4755-AH0040

UCS ID	MECHANICAL ID	NOTE(S)
4755-AH40-VAV01	4755-VAV0048	IAQ SENSOR
4755-AH40-VAV02	4755-VAV0050	
4755-AH40-VAV03	4755-VAV0049	
4755-AH40-VAV04	4755-VAV0051	
4755-AH40-VAV05	4755-VAV0052	
4755-AH40-VAV06	4755-VAV0053	
4755-AH40-VAV07	4755-VAV0054	
4755-AH40-VAV08	4755-VAV0056	
4755-AH40-VAV09	4755-VAV0058	
4755-AH40-VAV10	4755-VAV0057	
4755-AH40-VAV11	4755-VAV0055	
4755-AH40-VAV12	4755-VAV0059	

WARNING

DO NOT SCALE THIS DRAWING

THIS DRAWING WAS DESIGNED TO BE PRINTED AT A NASA SHEET SIZE: MSFC STD. SIZE 40" X 28"

PRELIMINARY CADD DWG.

CHANGES TO THIS DRAWING SHALL BE MADE ON CADD ONLY.

3426839 02-06-13 DGB

LATEST CADD UPDATE: 10-24-13 3:30 PM

BY: DUSTIN BORDER

REV.	BY	DATE	REVISION	C.I. NO.	APPROVED

Marshall Space Flight Center
Huntsville, Alabama 35812

WORK REQUEST NO. 3426839

BUILDING 4755

HVAC RENOVATION

UCS VAV CROSS REFERENCE TABLE

BASE BID

AE FIRM: KAYA Associates, Inc.

NASA AE CONTRACT NO. NAS8- NNM11AA39C

SUBMITTED: | APPROVAL RECOMMENDED: AD22 PROJECT A/E | APPROVED:

AE: | DATE: | APPROVAL RECOMMENDED: AD22 SUPPORT A/E | AB22 GROUP LEAD | DATE:

DESIGNED D. BORDER
DRAWN D. BORDER
CHECKED J. PAGE

APPROVAL RECOMMENDED: KAYA Associates, Inc.

SCALE: AS NOTED

SPEC. NO. FAC M5057

DRAWING NO. FAC-DA-4755-UCS40

SHEET OF

SIGNATURES ON INDEX SHEET INDICATE ACCEPTANCE OF THIS SHEET

REF. NO. UCS40 OF 40

MSFC-FORM 232 REV. 8-21-89-RCL

N:*DesignProjects*4755*DA-Mech. CoF*UCS40.dgn

MSFC Master Bid Disk 03-26-2014