1. MATERIAL: 1008-1030 STEEL.

2. 125 Ra ALL OVER UNLESS OTHERWISE NOTED.

3. BREAK ALL EDGES .010-.030 UNLESS OTHERWISE SPECIFIED.

4. ELECTROCHEMICAL ETCH DRAWING PART NUMBER 060928MRA935 ON SPECIFIED SURFACE, PER SAE-AS478, METHOD 7A, OR OPTIONAL, LASER ETCH DRAWING PART NUMBER ON SPECIFIED SURFACE, PER SAE-AS478, METHOD 15B1. (SHALLOW ENGRAVE 0.0001-0.0006 DEEP). (ZONE D6)

5. BEFORE SHIPPING, PROTECT WITH CONTAMINATION BARRIER SUCH AS WD-40, OR EQUIVALENT. USE NEW AND CLEAN POLYETHYLENE BAG, OR 4 MIL THICK MINIMUM POLYETHYLENE SHEET SEALED WITH PACKAGING TAPE. MARK WITH DRAWING PART NUMBER 060928MRA935 ON TAG ATTACHED TO BAG.

REVISION HISTORY				
ZONE	REV	DESCRIPTION	DATE	APPROVED

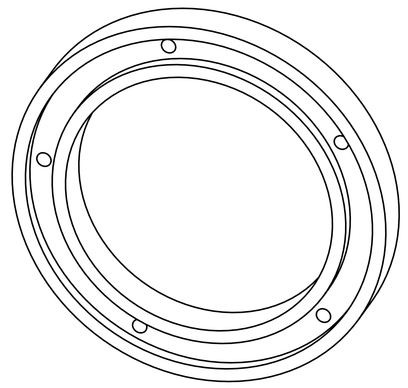

ISO VIEW
NO SCALE

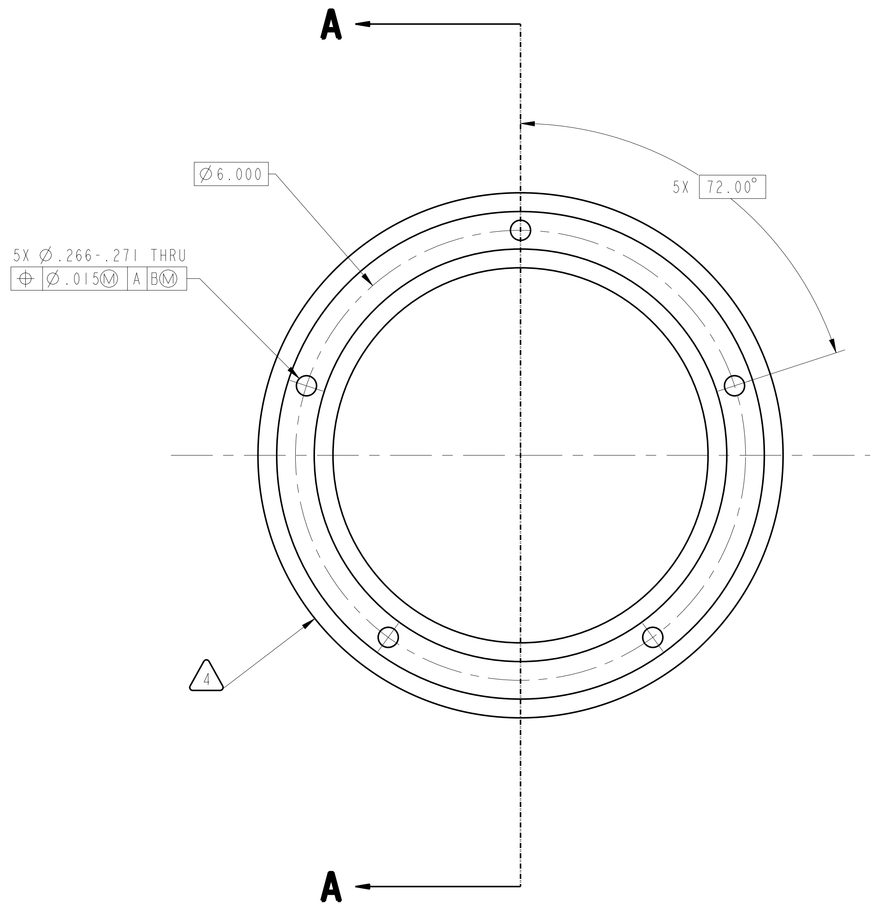

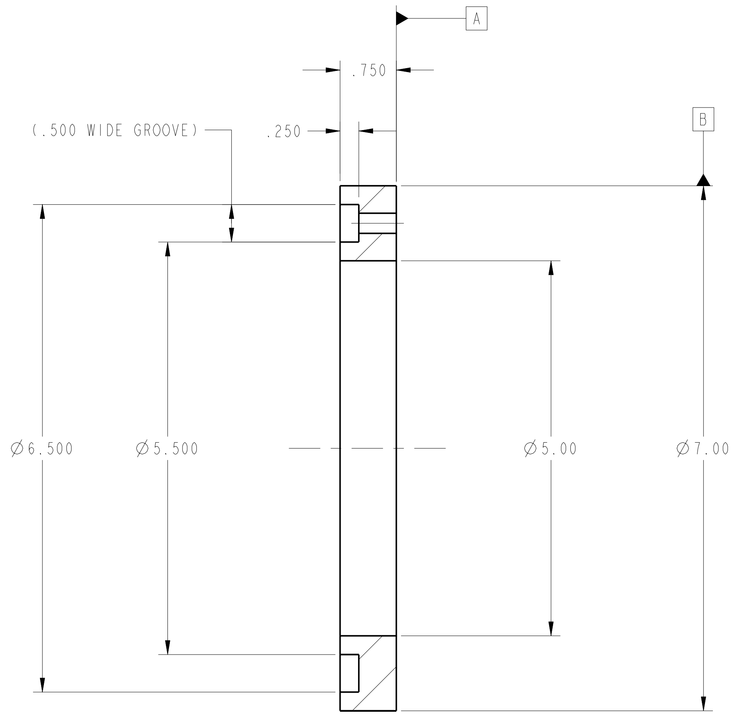

SECTION **A-A**

060928MRA710	2-SPEED TRANS	UNLESS OTHERWISE SPECIFIED DIMENSIONS ARE IN INCHES X.X ± 0.03 X.XXX ± 0.005 X.XX ± 0.01 ANGLE ± 0° 30' BREAK EDGES: .01-.02 INTERPRET DIMENSIONS AND TOLERANCES PER ASME Y14.5M - 1994	RELEASE DATE	02/07/2014
NEXT ASSY	USED ON	THIRD ANGLE PROJECTION	DESIGNER	DEZ / R. DETAMORE
APPLICATION			ENGINEER	DER / M. STEVENS
CONTRACTOR:	-		STATE	Released
CONTRACT NO:	-		WINDCHILL PRODUCT	060928_Variable_Speed_Transmissio
			MODEL	A935_RING_FIXTURE_WET-CLUTCH

NATIONAL AERONAUTICS AND SPACE ADMINISTRATION
JOHN H. GLENN RESEARCH CENTER
LEWIS FIELD, CLEVELAND, OHIO

TITLE: RING, FIXTURE, WET-CLUTCH

SIZE	CAGE CODE	DWG NO	REV
E	1QFP5	060928MRA935	-

SCALE: 1/1 SHEET 1 OF 1

DWG NO 060928MRA935 SH 1 REV -

WARNER@NEPHAPOR CLUBCITCHAR2_DWG_FIXTURE_WET-CLUTCH DATE:Feb-14-1314:28