REVISION HISTORY				
ZONE	REV	DESCRIPTION	DATE	APPROVED
H7	A	ADDED TO NOTE #14: "TO BE PERFORMED BY NASA TECHNICIANS:"	03/10/2014	RLD MAS

1. ALL DIMENSIONS SHOWN ARE FINISH DIMENSIONS. FINISH MACHINING TO BE PERFORMED AFTER ROUGH MACHINING, SHRINK FIT INSTALLATION OF INTERNAL HARDWARE AND HEAT TREATMENT. FOR ADDITIONAL INFORMATION SEE ASSEMBLY DRAWING NUMBER 0609287MRA760 AND AND SUB-ASSEMBLY DRAWING NUMBER 060928MRA762. ALSO SEE PART DRAWING NUMBERS 0928MRA763 AND 0928MRA764.
2. MATERIAL: 4340 STEEL, SAE AMS 6415S.
3. PRIOR TO FABRICATION, MATERIAL MUST PASS ULTRASONIC INSPECTION PER SAE-AMS-2154, TYPE I (IMMERSION), CLASS A.
4. HEAT TREAT: Rc 38-42 PRIOR TO FINISH MACHINING. VENDOR PREFERENCE TO HEAT TREAT PRIOR TO OR AFTER SHRINK FITTING OF INTERNAL HARDWARE.
5. 64 Ra ALL OVER UNLESS OTHERWISE SPECIFIED.
6. BREAK ALL EDGES .010-.020 UNLESS OTHERWISE SPECIFIED.
7. ALL CORNER FILLETS TO BE R.015-.020 UNLESS OTHERWISE SPECIFIED.
8. MINIMUM GRINDING RELIEF ON DIAMETER IS ACCEPTABLE IF NECESSARY TO ACHIEVE SPECIFIED DIMENSIONS.
9. RELIEF FOR THREADING, IF NECESSARY, SHALL NOT EXCEED WIDTH OF TWO THREADS AND DIAMETER SHALL NOT BE LESS THAN .015 SMALLER THAN MINOR DIAMETER.
10. ALL FILLETS MUST BLEND WITH ADJOINING SURFACES WITH NO UNDERCUTS AND MUST BE POLISHED SMOOTH WITH NO VISIBLE TOOL MARKS.
11. UNLESS OTHERWISE SPECIFIED, ALL FACES AND DIAMETERS MUST BE ⌖ .002 A-B C
12. FINISHED PART MUST PASS DYE PENETRANT INSPECTION PER ASTM-E1417 TYPE I, METHOD A, SENSITIVITY LEVEL 2. ACCEPTANCE PER MIL-STD-1907, GRADE C. REMOVAL OF DEFECTS BY GRINDING OR POLISHING SHALL BE WITHIN DIMENSIONAL TOLERANCES.

NOTES CONTD.:

13. ROUGH MACHINING DIMENSIONS SHOWN FOR 3.000 P3 POLYGONS ARE BASED ON "STOFFEL POLYGON SYSTEMS STANDARDS". IF A DIFFERANT MANUFACTURER IS TO BE USED, CONFIRM ROUGH MACHINING REQUIREMENTS WITH THAT MANUFACTURER.
14. TO BE PERFORMED BY NASA TECHNICIANS: MATCH MARK TWO SERIALIZED PART ASSEMBLIES COMPRISED OF PN 060928MRA755, PN 060928MRA757 AND PN 060928MRA760 FOR MACHINING AND FITMENT OF POLYGON FEATURES RELATIVE TO LOBE ANGULAR ORIENTATIONS (CLOCKING) AND ALSO TO ASSURE MAINTAINING OF PARTS POLYGON LOBE ANGULAR ORIENTATIONS FOR REASSEMBLY DURING BALANCE OPERATIONS AND FOR FINAL ASSEMBLY.

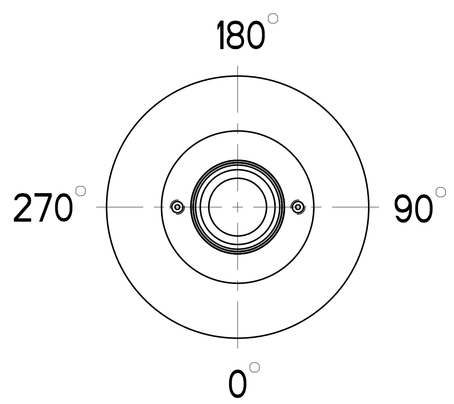

(REFERENCE: THIS VIEW IS FORWARD LOOKING AFT)

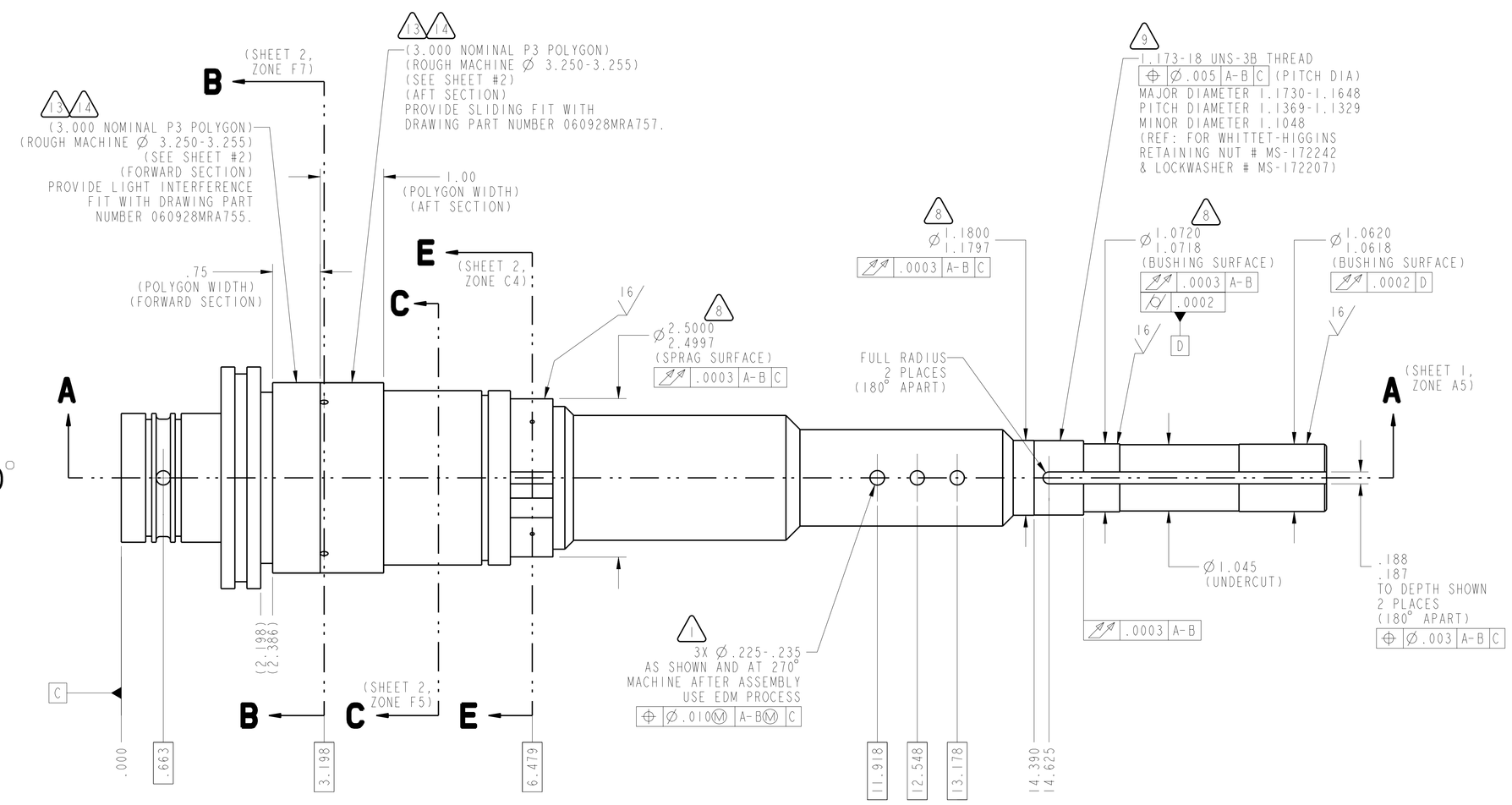

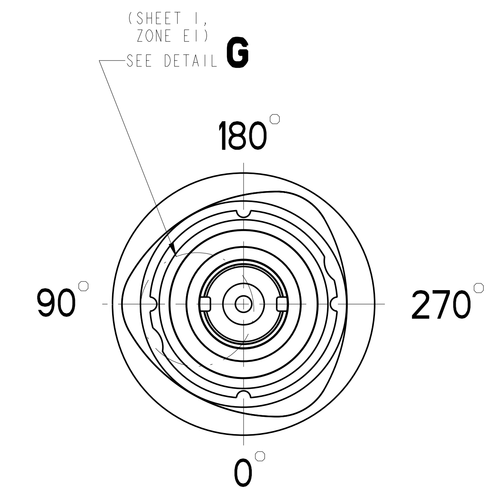

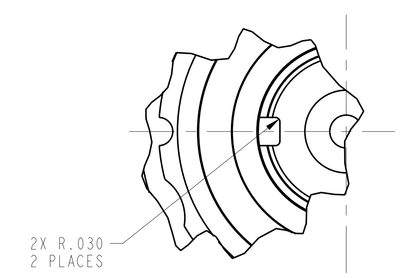

DETAIL G
SCALE 2/1

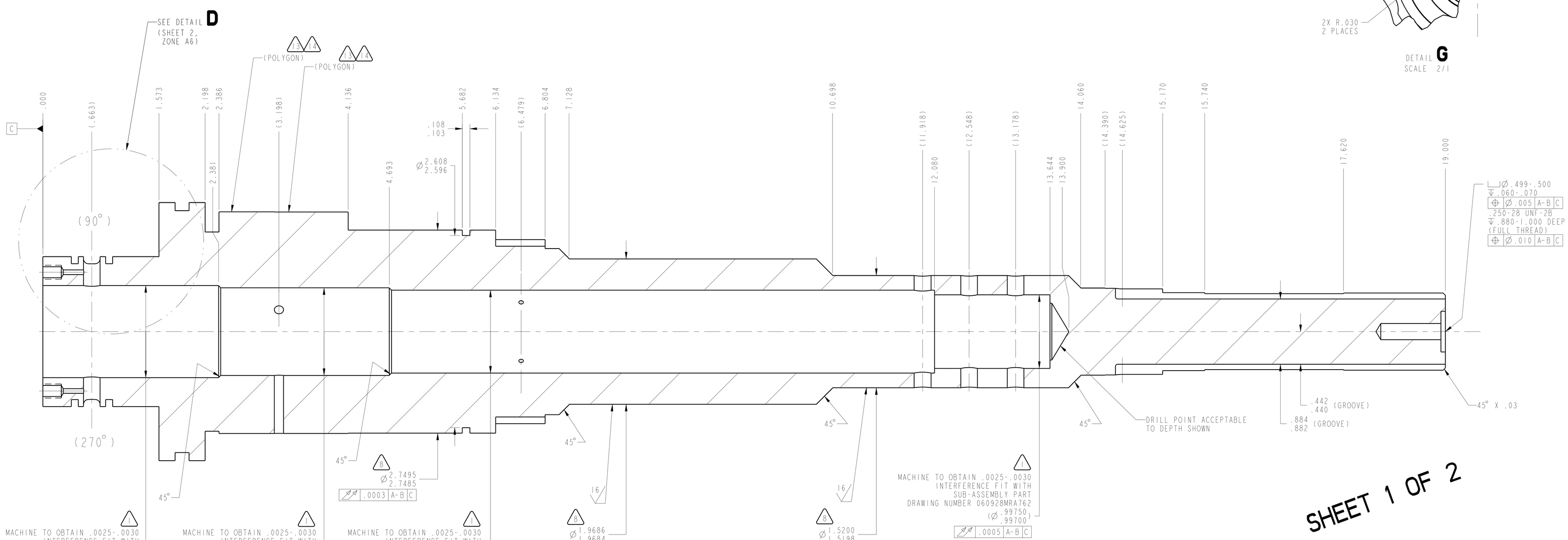

SECTION A-A
SCALE 2/1

SHEET 1 OF 2

060928MRA705	2-SPEED TRANS	UNLESS OTHERWISE SPECIFIED DIMENSIONS ARE IN INCHES X.X ± 0.03 X.XXX ± 0.005 X.XX ± 0.01 ANGLE ± 0° 30' BREAK EDGES: .01-.02 INTERPRET DIMENSIONS AND TOLERANCES PER ASME Y14.5M - 1994	RELEASE DATE 02/07/2014
NEXT ASSY	USED ON	THIRD ANGLE PROJECTION	DESIGNER DEZ / R. DETAMORE
APPLICATION			ENGINEER DER / M. STEVENS
CONTRACTOR: -			STATE Released
CONTRACT NO: -			WINDCHILL PRODUCT 060928_Variable_Speed_Transmissio
			MODEL A761_SHAFT_OUTPUT_SHELL

NATIONAL AERONAUTICS AND SPACE ADMINISTRATION
JOHN H. GLENN RESEARCH CENTER
LEWIS FIELD, CLEVELAND, OHIO

TITLE: SHAFT, OUTPUT, SHELL

SIZE	CAGE CODE	DWG NO	REV
E	1QFP5	060928MRA761	A

SCALE: 1/1 SHEET 1 OF 2

DWG NO 060928MRA761 SH 1 REV A

NAME:DETAMOR OBJECT:VNV_DRAFT_OUTPUT_SHELL_1 DATE:10-Apr-14 11:01:04

1. SEE SHEET 01 FOR ADDITIONAL INFORMATION, GENERAL NOTES AND TOLERANCES.

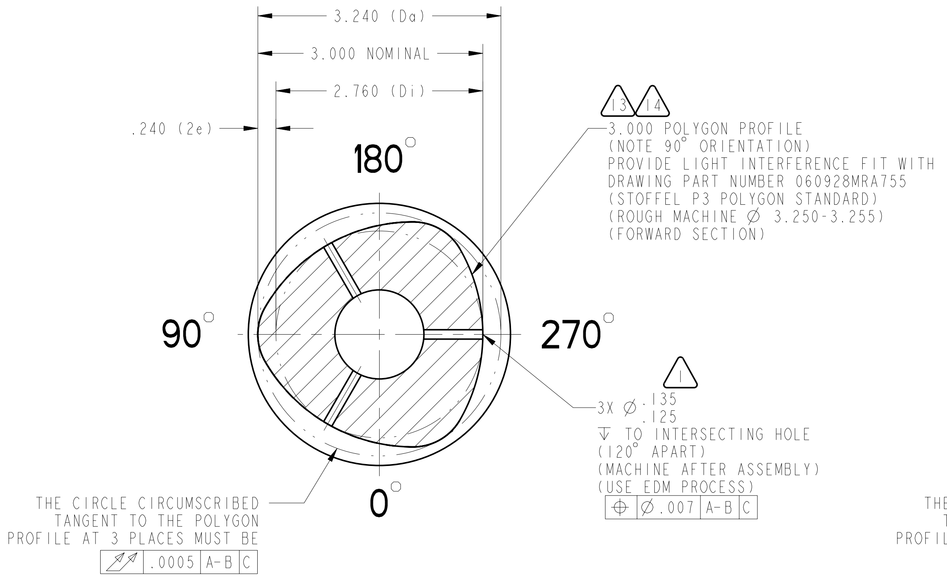

SECTION **B-B**

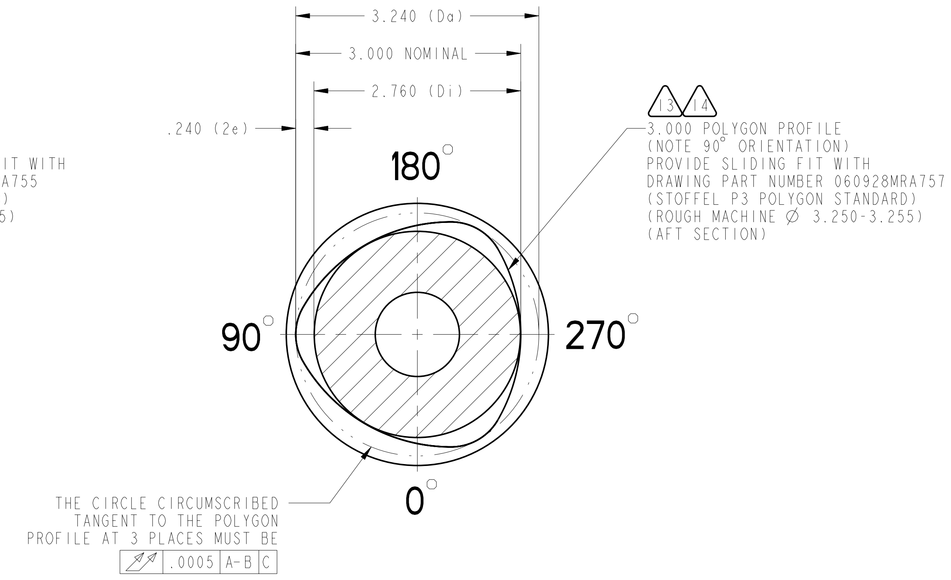

SECTION **C-C**

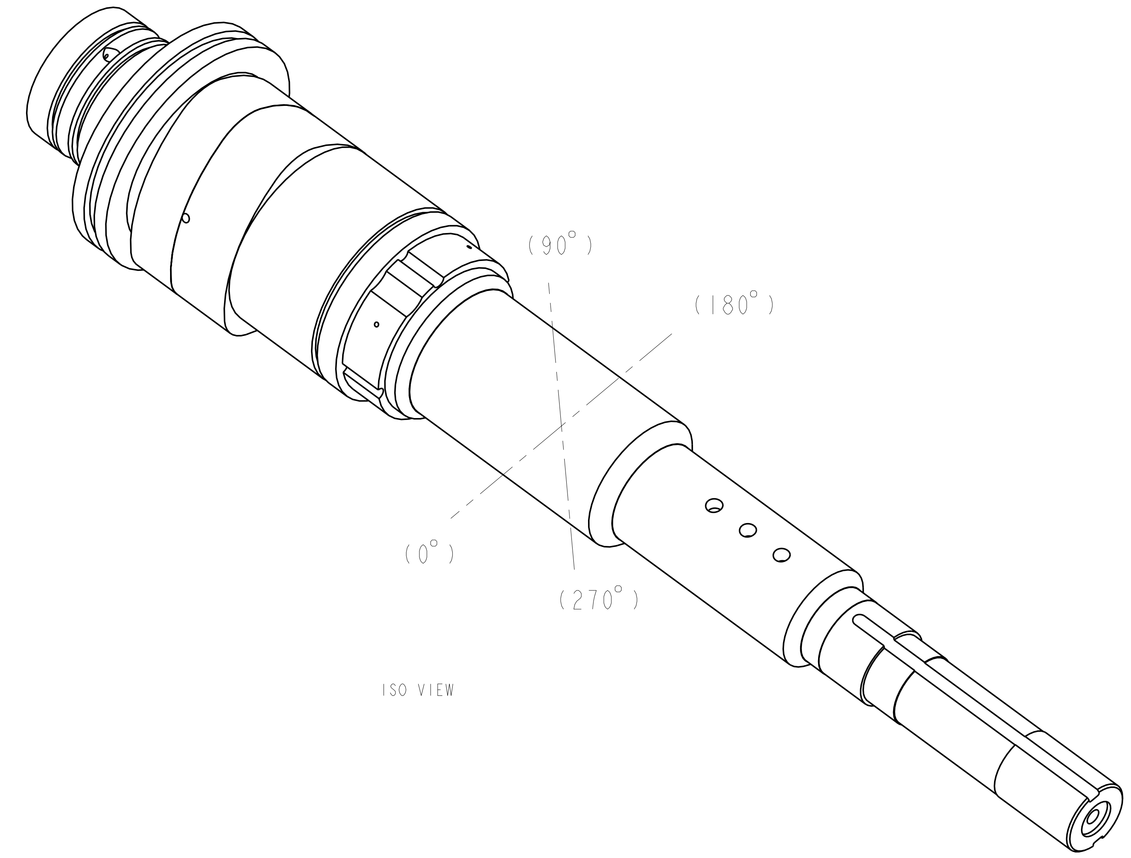

ISO VIEW

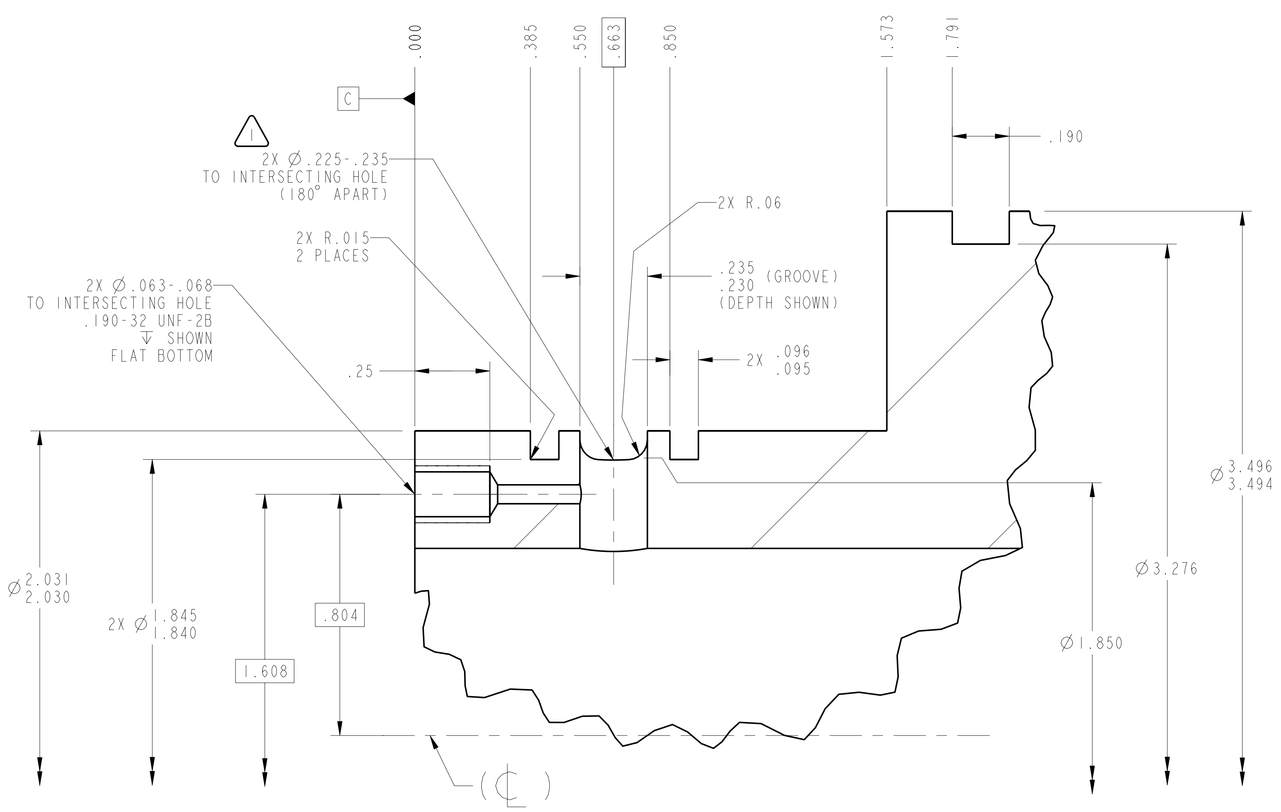

DETAIL **D**
SCALE 4/1
(SHEET 1, ZONE E7)

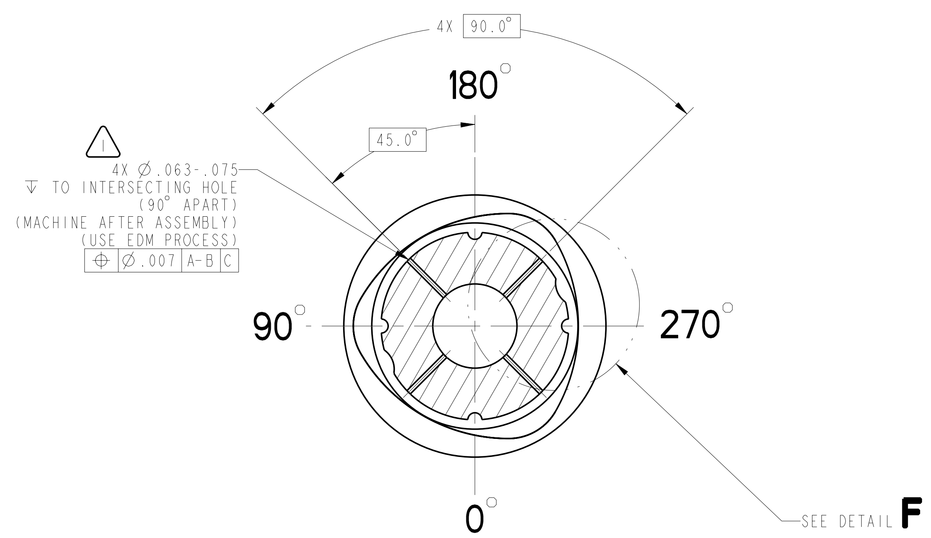

SECTION **E-E**

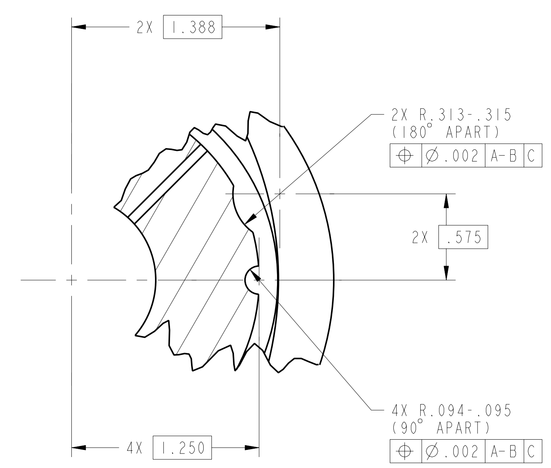

DETAIL **F**
SCALE 2/1

SHEET 2 OF 2

SIZE	CAGE CODE	DWG NO	REV
E	1QFP5	060928MRA761	A
SCALE: 1/1		SHEET 2	

DWG NO 060928MRA761 SH 2 REV A