REVISION HISTORY				
ZONE	REV	DESCRIPTION	DATE	APPROVED

1. FOR ADDITIONAL INFORMATION SEE DRAWINGS NUMBER 060928MRA761, 060928MRA762, 060928MRA763 AND 060928MRA764.

2. SHRINK FIT PROCEDURE: ASSEMBLE SUBASSEMBLY 060928MRA762 INSIDE OF 060928MRA761 AS SHOWN PROVIDING 0.0025 - 0.0030 DIAMETRAL INTERFERENCE FIT AT EACH END. INTERFERENCE FIT IS TO BE ELIMINATED BEFORE ASSEMBLY BY HEATING AND COOLING MATING PARTS AS REQUIRED. REF: HEAT PART NUMBER 060928MRA761 TO 500° F ALLOWING ADEQUATE SOAK TIME. THERMOCOUPLES ON 060928MRA761 ARE SUGGESTED. ADDITIONALLY, SUBASSEMBLY 060928MRA762 MAY BE SUBZERO COOLED. ENSURE FULL AXIAL SEATING OF 060928MRA762 IN RELATION TO 060928MRA761 BY MAKING PREASSEMBLY MEASUREMENTS FOR POST ASSEMBLY COMPARISON. THE LEFT INTERFERENCE DIAMETERS ARE LARGER THAN THOSE ON THE RIGHT FOR EASIER ASSEMBLY. ASSEMBLY LUBRICANT PERMITTED ON COOL PART ONLY BUT MUST BE CLEANED FOLLOWING ASSEMBLY.

3. ALL FINISH DIMENSIONS, EXCEPT NOTED, ARE SHOWN ON INDIVIDUAL COMPONENT DRAWINGS LISTED ABOVE AND IN PARTS LIST.

4. INTERNAL PASSAGES MUST BE FREE OF OBSTRUCTIONS AND LOOSE DEBRIS. EACH PASSAGE SHALL BE BLOCKAGE TESTED BY APPLYING 50 PSIG OF PRESSURE AT ONE END AND VERIFYING UNRESTRICTED FLOW AT THE OTHER END.

5. CERTIFICATES OF CONFORMANCE REQUIRED.

6. ELECTROCHEMICAL ETCH DRAWING PART NUMBER 060928MRA760 ON SPECIFIED SURFACE, PER SAE-AS478, METHOD 7A, OR OPTIONAL, LASER ETCH DRAWING PART NUMBER ON SPECIFIED SURFACE, PER SAE-AS478, METHOD 15B1. (SHALLOW ENGRAVE 0.0001-0.0006 DEEP). (ZONE F6) INCLUDE SEQUENTIAL DASH NUMBERS, FOR INSPECTION PURPOSES, WHEN MULTIPLE PARTS ARE MANUFACTURED. (EXAMPLE: 060928MRA760-1, -2)

NOTES CONTINUED:

7. BEFORE SHIPPING, PROTECT WITH CONTAMINATION BARRIER SUCH AS WD-40 OR EQUIVALENT. USE NEW AND CLEAN POLYETHYLENE BAG FOR SMALL ITEMS, OR 4 MIL THICK MINIMUM POLYETHYLENE SHEET SEALED WITH PACKAGING TAPE. MARK WITH DRAWING PART NUMBER 060928MRA760 ON TAG ATTACHED TO BAG.

8. NASA TECHNICIANS TO ACQUIRE AND INSTALL APPROPRIATE ORAFICE PER TEST MATRIX. INSTALLATION PER STANDARD TECHNICIAN MANUFACTURING PRACTICES. (ZONE D8)

9. TO BE DYNAMICALLY BALANCED BY NASA PER ASSEMBLY AND BALANCING REQUIREMENTS. REFERENCE: OPERATING SPEED 15,000 RPM.

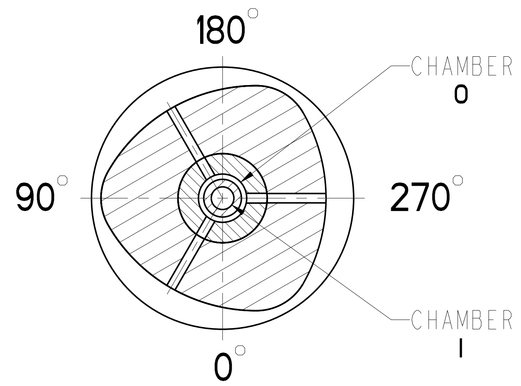

SECTION **B-B**

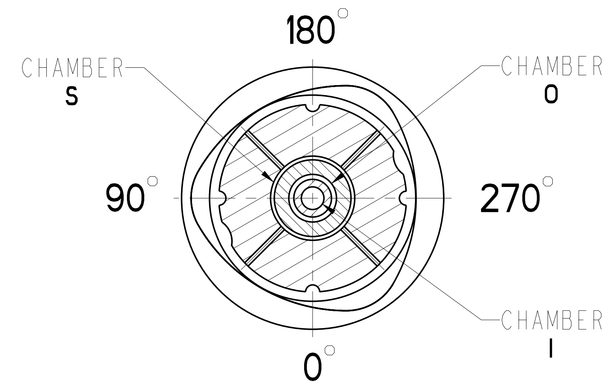

SECTION **C-C**

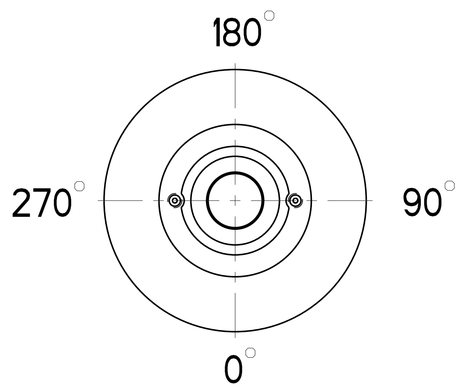

(REFERENCE: THIS VIEW IS FORWARD LOOKING AFT)

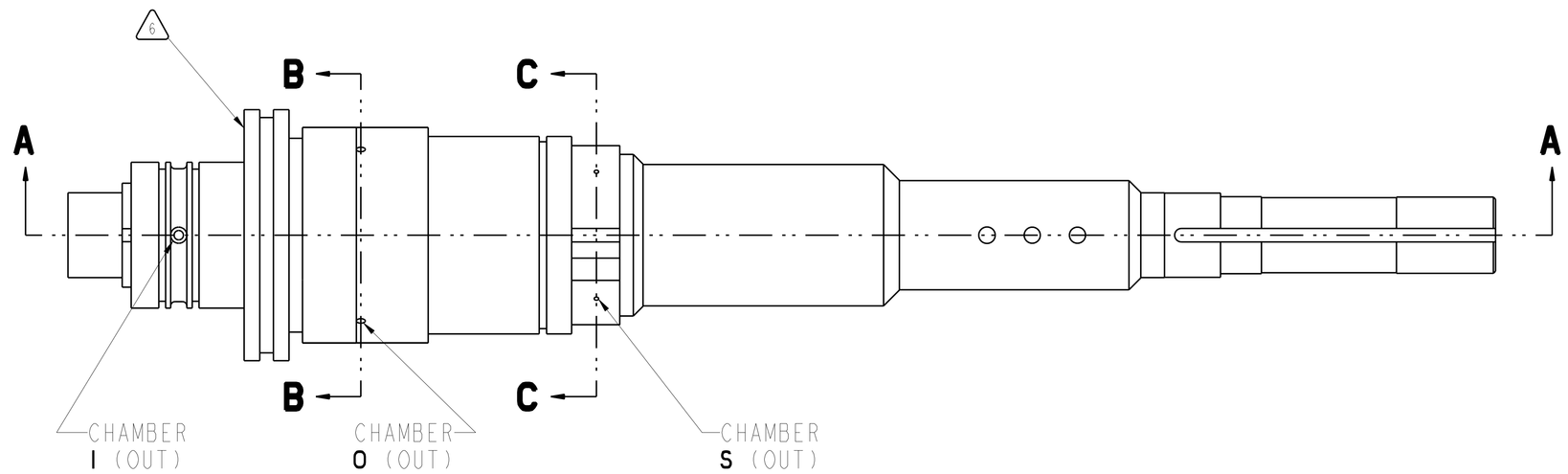

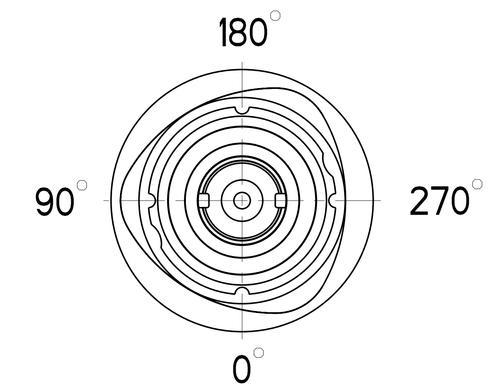

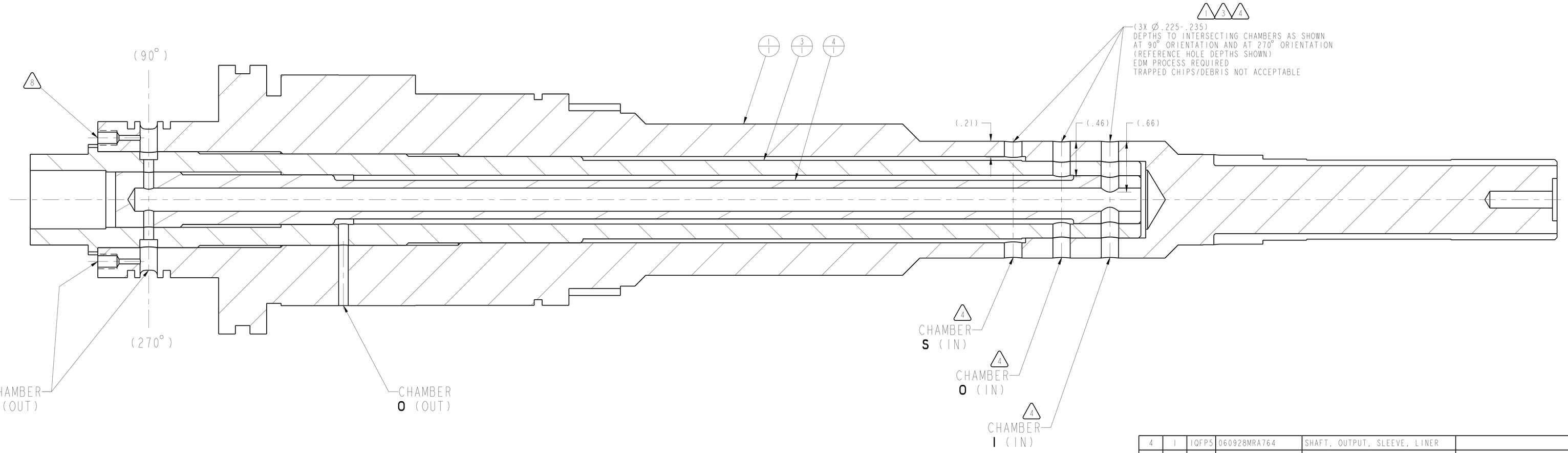

SECTION **A-A**
SCALE 2/1

FIND NO	QTY REQD	CAGE CODE	PART OR IDENT NO	NOMENCLATURE OR DESCRIPTION	NOTES OR REMARKS
4	1	1QFP5	060928MRA764	SHAFT, OUTPUT, SLEEVE, LINER	
3	1	1QFP5	060928MRA763	SHAFT, OUTPUT, SLEEVE, CORE	
2	1	1QFP5	060928MRA762	SHAFT, OUTPUT, SUB-ASM	
1	1	1QFP5	060928MRA761	SHAFT, OUTPUT, SHELL	

PARTS LIST

CHAMBER DISCRIPTOR:

S = SPRAG LUBE
O = CLUTCH RELEASE
I = OIL JET LUBE

060928MRA700	2-SPEED TRANS
NEXT ASSY	USED ON
APPLICATION	
CONTRACTOR: -	
CONTRACT NO: -	

UNLESS OTHERWISE SPECIFIED DIMENSIONS ARE IN INCHES
X.X ± 0.03 X.XXX ± 0.005
X.XX ± 0.01 ANGLE ± 0° 30'
BREAK EDGES: .01-.02
INTERPRET DIMENSIONS AND TOLERANCES PER ASME Y14.5M - 1994
THIRD ANGLE PROJECTION

RELEASE DATE	02/07/2014
DESIGNER	DEZ / R. DETAMORE
ENGINEER	DER / M. STEVENS
STATE	Released
WINDCHILL PRODUCT	
060928_Variable_Speed_Transmissio	
MODEL	
A760_SHAFT_OUTPUT_WET-CLUTCH	

NATIONAL AERONAUTICS AND SPACE ADMINISTRATION
JOHN H. GLENN RESEARCH CENTER
LEWIS FIELD, CLEVELAND, OHIO

TITLE: SHAFT, OUTPUT, WET-CLUTCH

SIZE	CAGE CODE	DWG NO	REV
E	1QFP5	060928MRA760	-

SCALE: 1/1 SHEET 1 OF 1

DWG NO 060928MRA760 SH 1 REV -

NAME:ROETAMOR OBJECT:NONE;RMVF_OUTPUT_WET-CLUTCH DATE:Sep-04-15 08:16