REVISION HISTORY				
ZONE	REV	DESCRIPTION	DATE	APPROVED

>> FOLLOWING NOTES APPLY TO THIS SHEET

1. MATERIAL: 4340 STEEL, SAE AMS 6415S.
2. PRIOR TO FABRICATION, MATERIAL MUST PASS ULTRASONIC INSPECTION PER SAE-AMS-2154, TYPE I (IMMERSION), CLASS A.
3. HEAT TREAT: Rc 38-42 PRIOR TO FINISH.
4. 64 Ra ALL OVER UNLESS OTHERWISE NOTED.
5. UNLESS OTHERWISE SPECIFIED ALL FACES AND DIAMETERS MUST BE ⌖ .004 A B
6. ALL CORNER FILLETS TO BE .015-.020 UNLESS OTHERWISE SPECIFIED.
7. BREAK ALL EDGES .010-.020 UNLESS OTHERWISE SPECIFIED.
8. FINISHED PART MUST PASS DYE PENETRANT INSPECTION PER ASTM-E1417 TYPE I, METHOD A, SENSITIVITY LEVEL 2. ACCEPTANCE PER MIL-STD-1907, GRADE C. REMOVAL OF DEFECTS BY GRINDING OR POLISHING SHALL BE WITHIN DIMENSIONAL TOLERANCES.
9. BLACK OXIDE PER MIL-DTL-13924D, CLASS 1.
10. ELECTROCHEMICAL ETCH DRAWING PART NUMBER 060928MRA756 ON SPECIFIED SURFACE, PER SAE-AS478, METHOD 7A, OR OPTIONAL, LASER ETCH DRAWING PART NUMBER ON SPECIFIED SURFACE, PER SAE-AS478, METHOD 15B1. (SHALLOW ENGRAVE 0.0001-0.0006 DEEP). (ZONE D5) INCLUDE SERIALIZED DASH NUMBERS, FOR INSPECTION PURPOSES, WHEN MULTIPLE PARTS ARE MANUFACTURED. (EXAMPLE: 060928MRA756-1, -2)

NOTES CONTD.:

11. BEFORE SHIPPING, PROTECT WITH CONTAMINATION BARRIER SUCH AS WD-40, OR EQUIVALENT. USE NEW AND CLEAN POLYETHYLENE BAG, OR 4 MIL THICK MINIMUM POLYETHYLENE SHEET SEALED WITH PACKAGING TAPE. MARK WITH DRAWING PART NUMBER 060928MRA756 ON TAG ATTACHED TO BAG.
12. TO BE DYNAMICALLY BALANCED BY NASA PER ASSEMBLY AND BALANCING REQUIREMENTS. REFERENCE: OPERATING SPEED 15,000 RPM.

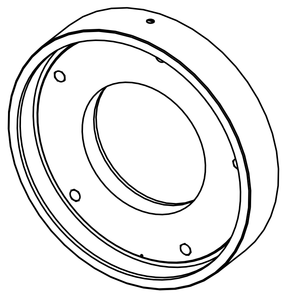

ISO VIEW
(FORWARD FACE)
SCALE 1/2

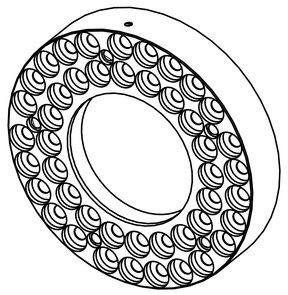

ISO VIEW
(AFT FACE)
SCALE 1/2

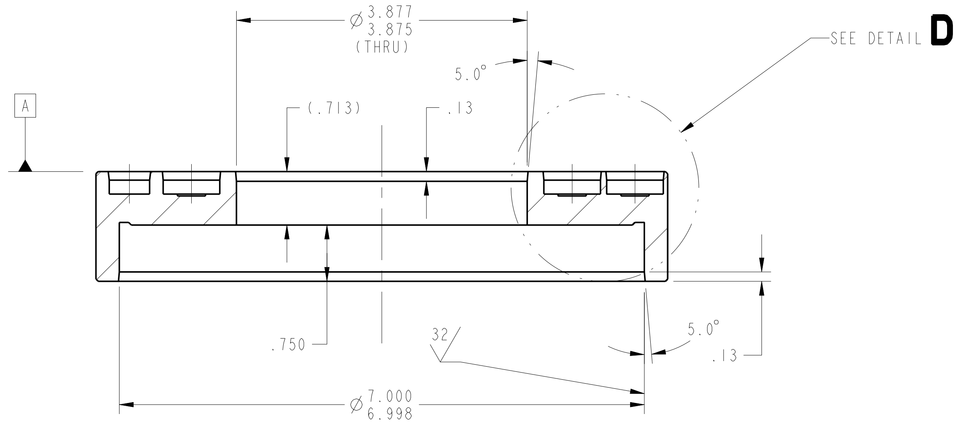

SECTION **A-A**

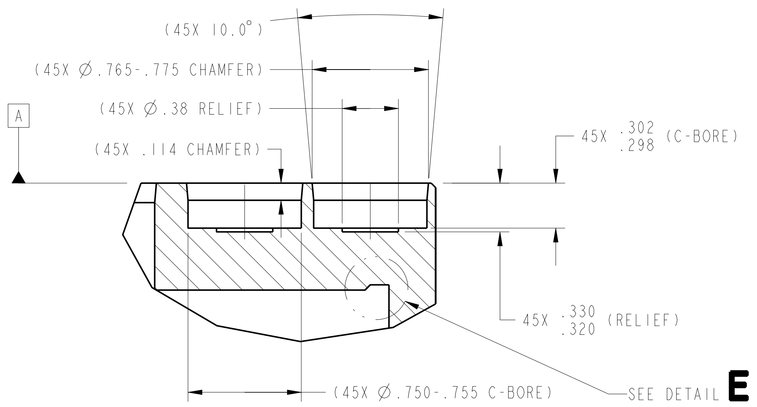

DETAIL **D**
SCALE 2/1

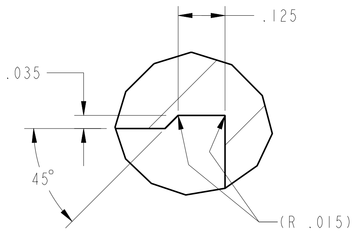

DETAIL **E**
(RELIEF DETAIL)
SCALE 5/1

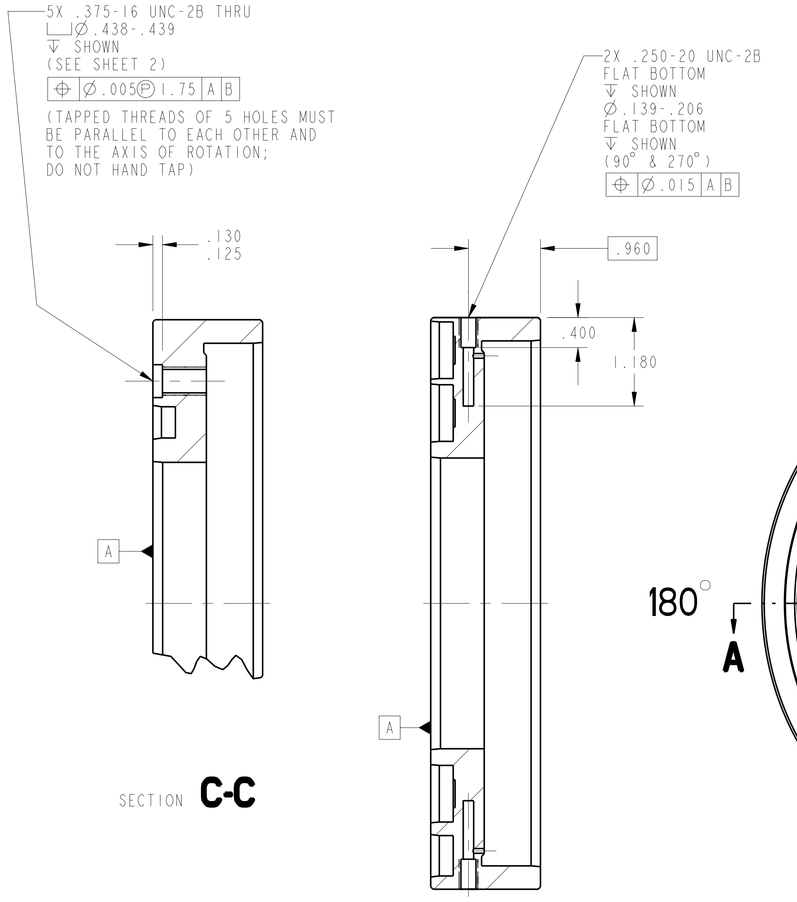

SECTION **C-C**

SECTION **B-B**

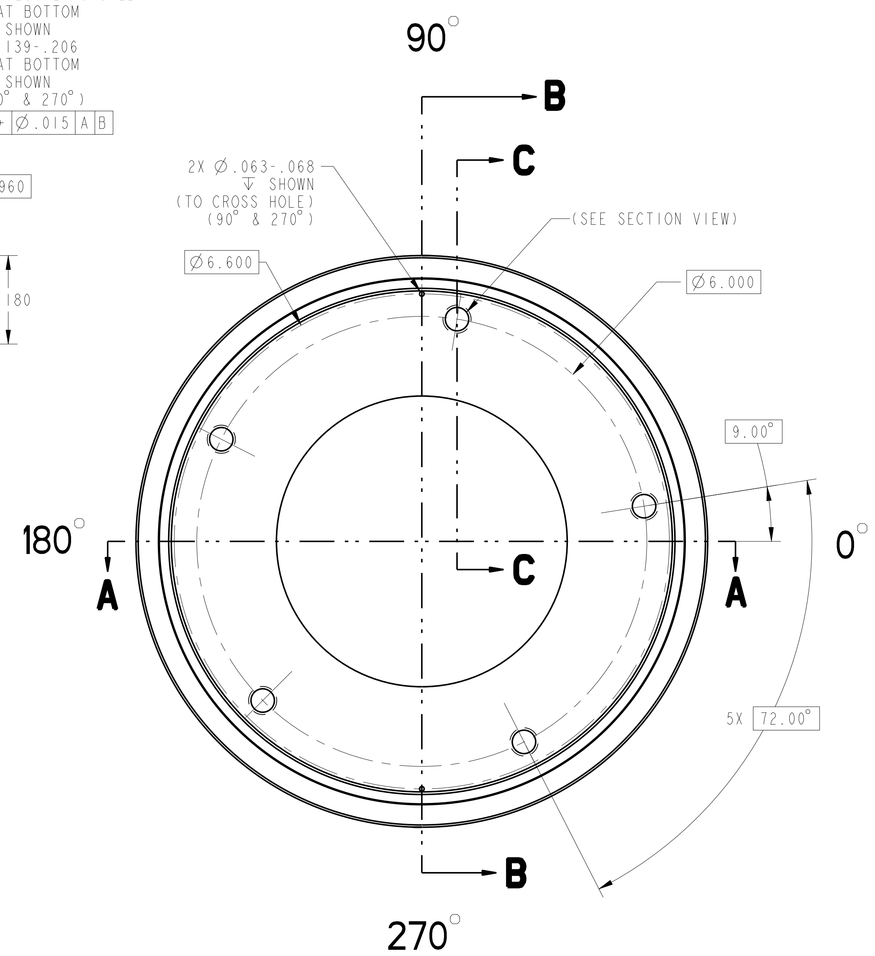

(REFERENCE: THIS VIEW IS FORWARD LOOKING AFT)

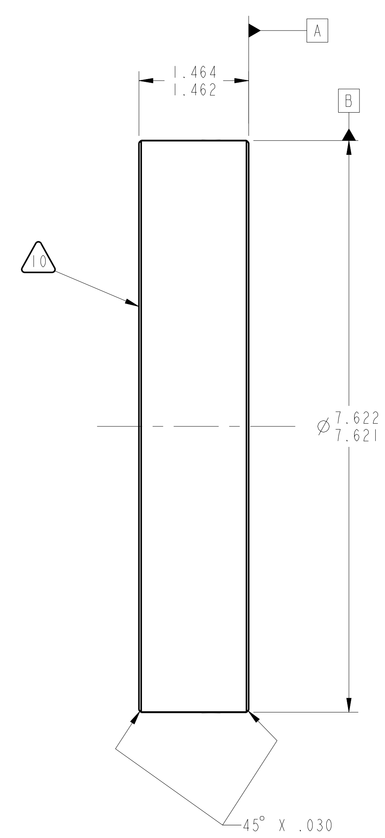

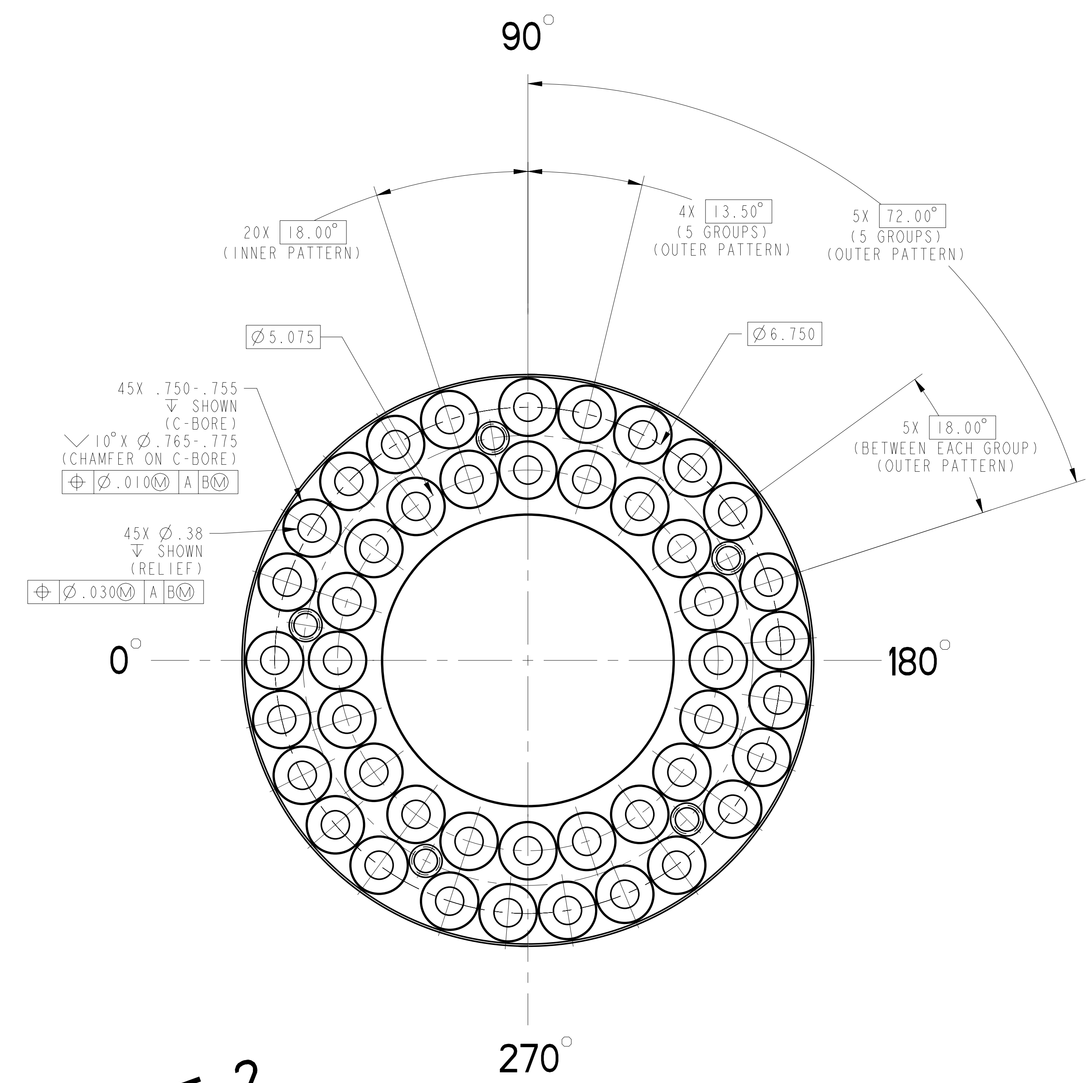

SHEET 1 OF 2

060928MRA710	2-SPEED TRANS	NEXT ASSY	USED ON
APPLICATION			
CONTRACTOR:	-		
CONTRACT NO:	-		

UNLESS OTHERWISE SPECIFIED
DIMENSIONS ARE IN INCHES
X.X ± 0.03 X.XXX ± 0.005
X.XX ± 0.01 ANGLE ± 0° 30'
BREAK EDGES: .01-.02
INTERPRET DIMENSIONS AND TOLERANCES PER ASME Y14.5M - 1994
THIRD ANGLE PROJECTION

RELEASE DATE	02/07/2014
DESIGNER	DEZ / R. DETAMORE
ENGINEER	DER / M. STEVENS
STATE	Released
WINDCHILL PRODUCT	
060928_Variable_Speed_Transmissio	
MODEL	
A756_PISTON_LOAD_SPRING	

NATIONAL AERONAUTICS AND SPACE ADMINISTRATION
JOHN H. GLENN RESEARCH CENTER
LEWIS FIELD, CLEVELAND, OHIO

TITLE: PISTON, LOAD, SPRING

SIZE	CAGE CODE	DWG NO	REV
E	1QFP5	060928MRA756	-
SCALE: 1/1		SHEET 1 OF 2	

DWG NO 060928MRA756 SH 1 REV -

NAME/DESTINATION OBJECT:A756_PISTON_LOAD_SPRING.1 DATE:07-Feb-14 13:35:07

>> FOLLOWING NOTES APPLY TO THIS SHEET

1. MATERIAL: 0-1 TOOL STEEL PER ASTM A681-94.

2. 64 Ra ALL OVER UNLESS OTHERWISE NOTED.

3. UNLESS OTHERWISE SPECIFIED ALL FACES AND DIAMETERS MUST BE ⌭ .004 A

4. ALL CORNER FILLETS TO BE .015-.020 UNLESS OTHERWISE SPECIFIED.

5. BREAK ALL EDGES .010-.020 UNLESS OTHERWISE SPECIFIED.

6. ELECTROCHEMICAL ETCH DRAWING PART NUMBER 060928MRA756 ON SPECIFIED SURFACE, PER SAE-AS478, METHOD 7A, OR OPTIONAL, LASER ETCH DRAWING PART NUMBER ON SPECIFIED SURFACE, PER SAE-AS478, METHOD 15B1. (SHALLOW ENGRAVE 0.0001-0.0006 DEEP). (ZONE E4) INCLUDE SERIALIZED DASH NUMBERS, FOR INSPECTION PURPOSES, WHEN MULTIPLE PARTS ARE MANUFACTURED. (EXAMPLE: 060928MRA756-01, -02, -03)

7. BEFORE SHIPPING, PROTECT WITH CONTAMINATION BARRIER SUCH AS WD-40, OR EQUIVALENT. USE NEW AND CLEAN POLYETHYLENE BAG, OR 4 MIL THICK MINIMUM POLYETHYLENE SHEET SEALED WITH PACKAGING TAPE. MARK WITH DRAWING PART NUMBER 060928MRA756 ON TAG ATTACHED TO BAG.

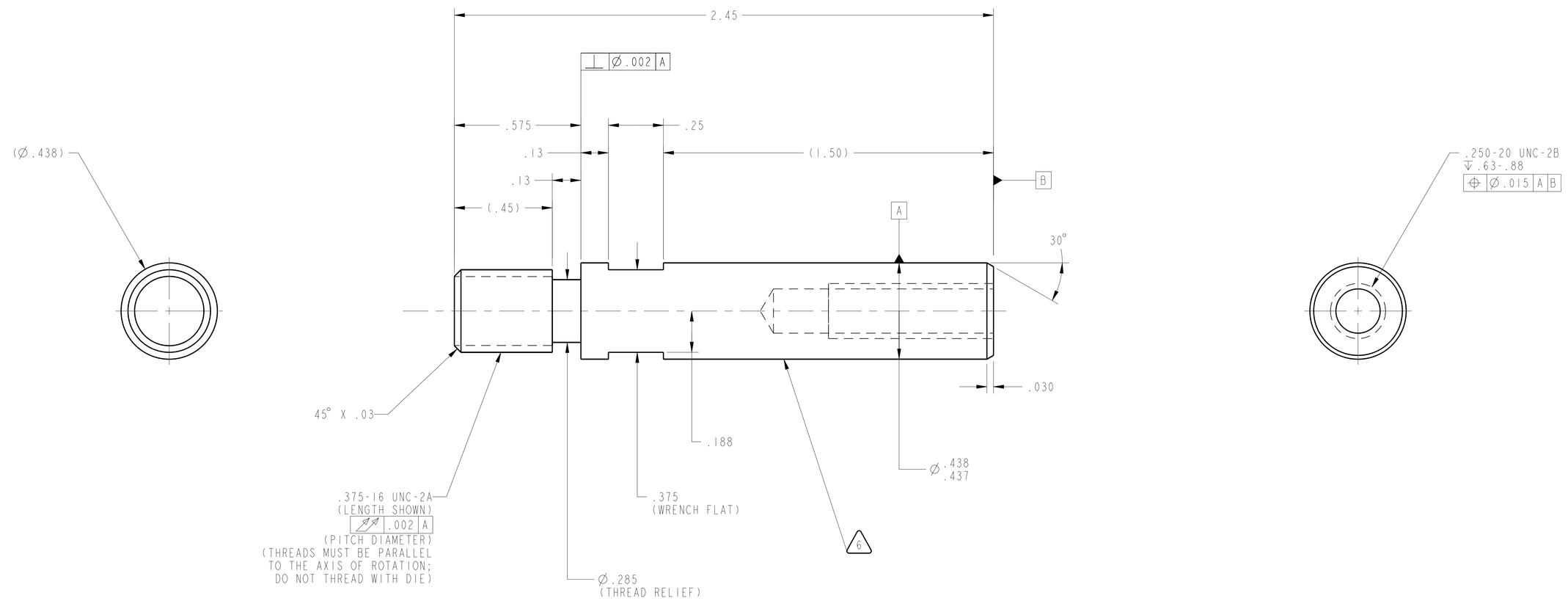

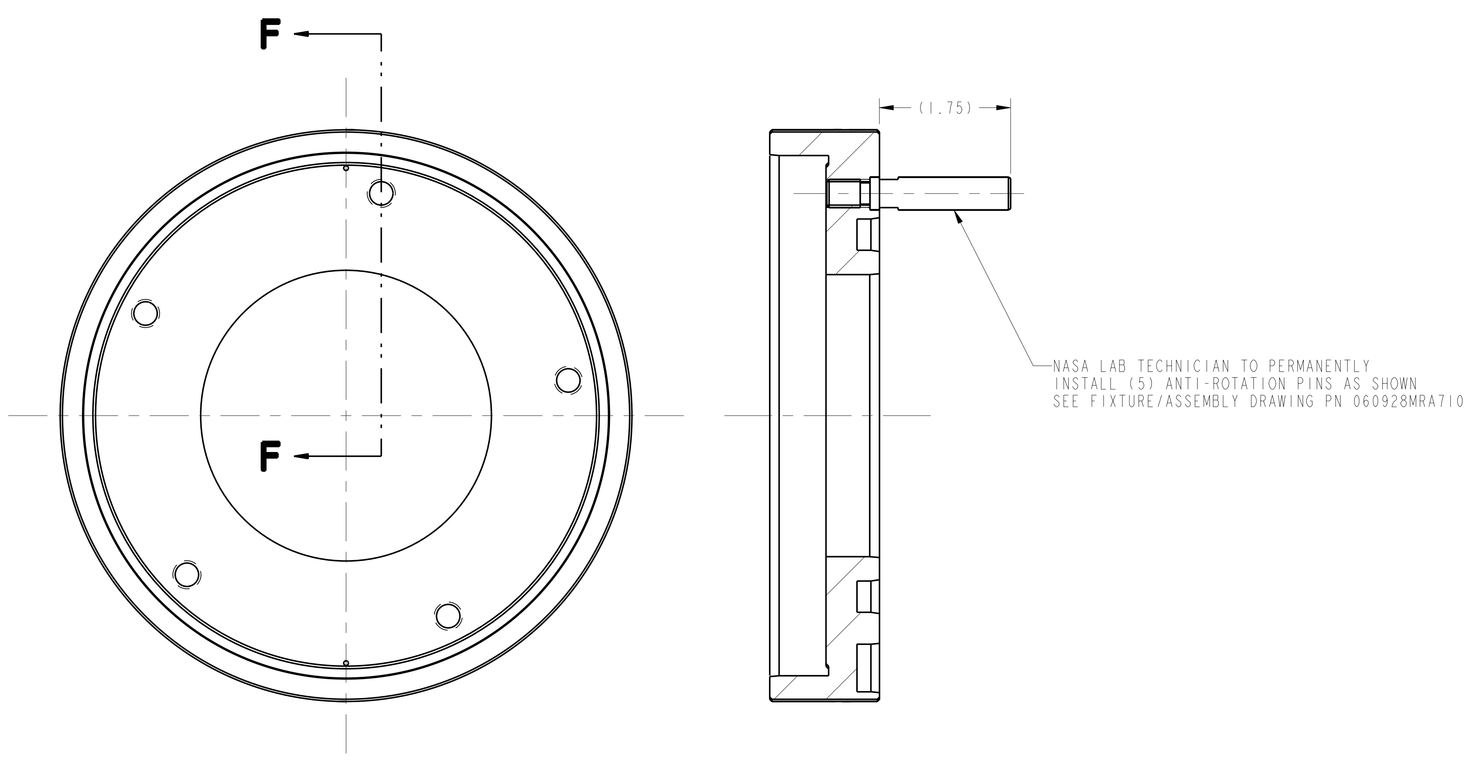

(REFERENCE: THIS VIEW IS FORWARD LOOKING AFT)

SECTION **F-F**
(FOR ASSEMBLY REFERENCE)

SHEET 2 OF 2

SIZE	CAGE CODE	DWG NO	REV
E	1QFP5	060928MRA756	-
SCALE: 1/1		SHEET 2	

DWG NO 060928MRA756 SH 2 REV -