REVISION HISTORY				
ZONE	REV	DESCRIPTION	DATE	APPROVED
H7	A	ADDED TO NOTE #12: "TO BE PERFORMED BY NASA TECHNICIANS:"	03/10/2014	RLD MAS

1. MATERIAL: 4340 STEEL, SAE AMS 6415S.
2. PRIOR TO FABRICATION, MATERIAL MUST PASS ULTRASONIC INSPECTION PER SAE-AMS-2154, TYPE I (IMMERSION), CLASS A.
3. HEAT TREAT: Rc 38-42 PRIOR TO FINISH.
4. 64 Ra ALL OVER UNLESS OTHERWISE NOTED.
5. UNLESS OTHERWISE SPECIFIED ALL FACES AND DIAMETERS MUST BE ⌭ .004 A B
6. ALL CORNER FILLETS TO BE .015-.020 UNLESS OTHERWISE SPECIFIED.
7. BREAK ALL EDGES .010-.020 UNLESS OTHERWISE SPECIFIED.
8. FINISHED PART MUST PASS DYE PENETRANT INSPECTION PER ASTM-E1417 TYPE I, METHOD A, SENSITIVITY LEVEL 2. ACCEPTANCE PER MIL-STD-1907, GRADE C. REMOVAL OF DEFECTS BY GRINDING OR POLISHING SHALL BE WITHIN DIMENSIONAL TOLERANCES.
9. BLACK OXIDE PER MIL-DTL-13924D, CLASS 1.
10. ELECTROCHEMICAL ETCH DRAWING PART NUMBER 060928MRA755 ON SPECIFIED SURFACE, PER SAE-AS478, METHOD 7A, OR OPTIONAL, LASER ETCH DRAWING PART NUMBER ON SPECIFIED SURFACE, PER SAE-AS478, METHOD 15B1. (SHALLOW ENGRAVE 0.0001-0.0006 DEEP). (ZONE H4) INCLUDE SERIALIZED DASH NUMBERS, FOR INSPECTION PURPOSES, WHEN MULTIPLE PARTS ARE MANUFACTURED. (EXAMPLE: 060928MRA755-1, -2)
11. ROUGH MACHINING DIMENSIONS SHOWN FOR 3.000 P3 POLYGONS ARE BASED ON "STOFFEL POLYGON SYSTEMS STANDARDS". IF A DIFFERANT MANUFACTURER IS TO BE USED, CONFIRM ROUGH MACHINING REQUIREMENTS WITH THAT MANUFACTURER.
12. TO BE PERFORMED BY NASA TECHNICIANS: MATCH MARK TWO SERIALIZED PART ASSEMBLIES COMPRISED OF PN 060928MRA755, PN 060928MRA757 AND PN 060928MRA760 FOR MACHINING AND FITMENT OF POLYGON FEATURES RELATIVE TO LOBE ANGULAR ORIENTATIONS (CLOCKING) AND ALSO TO ASSURE MAINTAINING OF PARTS POLYGON LOBE ANGULAR ORIENTATIONS FOR REASSEMBLY DURING BALANCE OPERATIONS AND FOR FINAL ASSEMBLY.
13. BEFORE SHIPPING, PROTECT WITH CONTAMINATION BARRIER SUCH AS WD-40, OR EQUIVALENT. USE NEW AND CLEAN POLYETHYLENE BAG, OR 4 MIL THICK MINIMUM POLYETHYLENE SHEET SEALED WITH PACKAGING TAPE. MARK WITH DRAWING PART NUMBER 060928MRA755 ON TAG ATTACHED TO BAG.
14. TO BE DYNAMICALLY BALANCED BY NASA PER ASSEMBLY AND BALANCING REQUIREMENTS. REFERENCE: OPERATING SPEED 15,000 RPM.

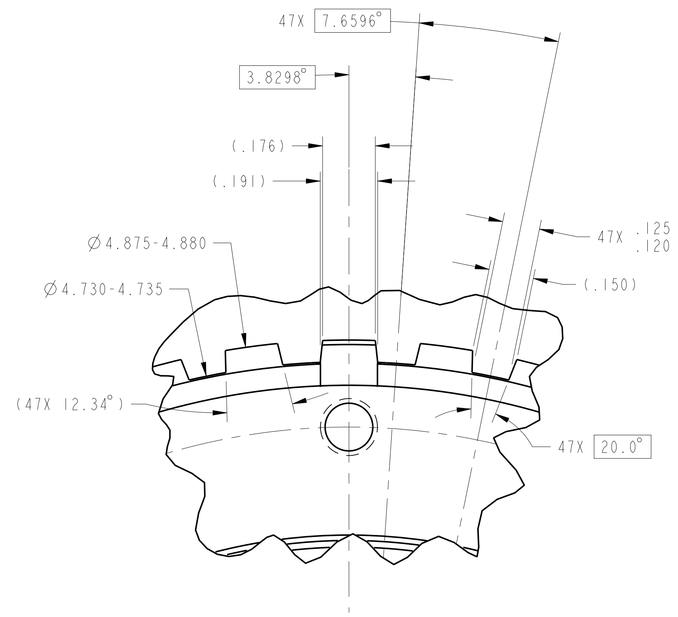

DETAIL C
SCALE 4/1

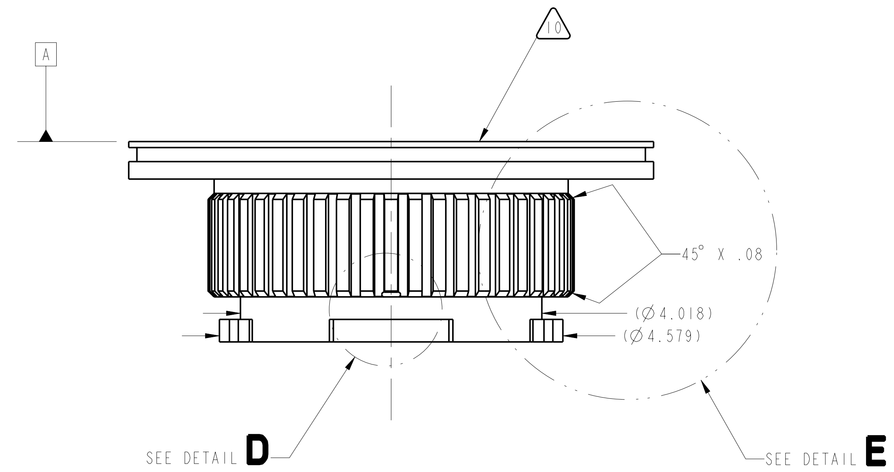

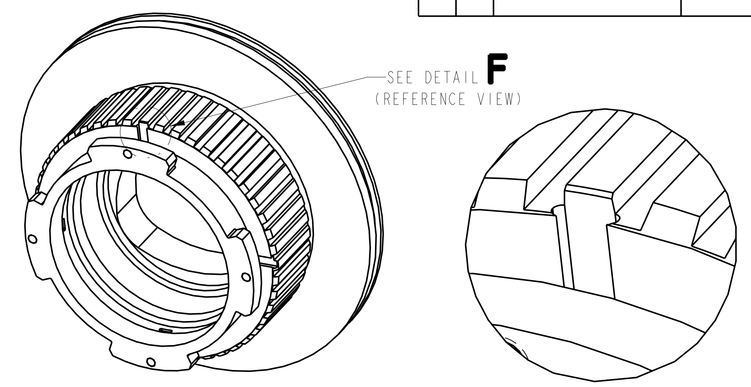

ISO VIEW
NO SCALE

DETAIL F
(REFERENCE VIEW)
(4X SLOT THRU)
NO SCALE

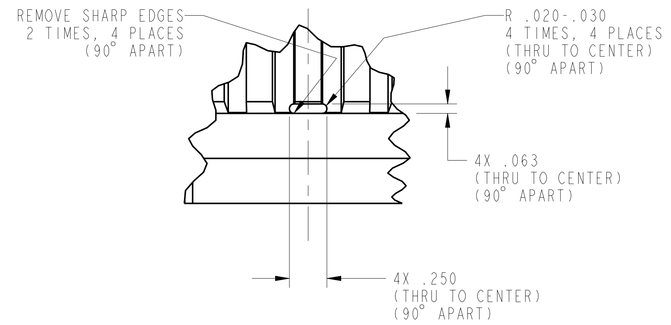

DETAIL D
(SEE ALSO SECTION A-A)
SCALE 2/1

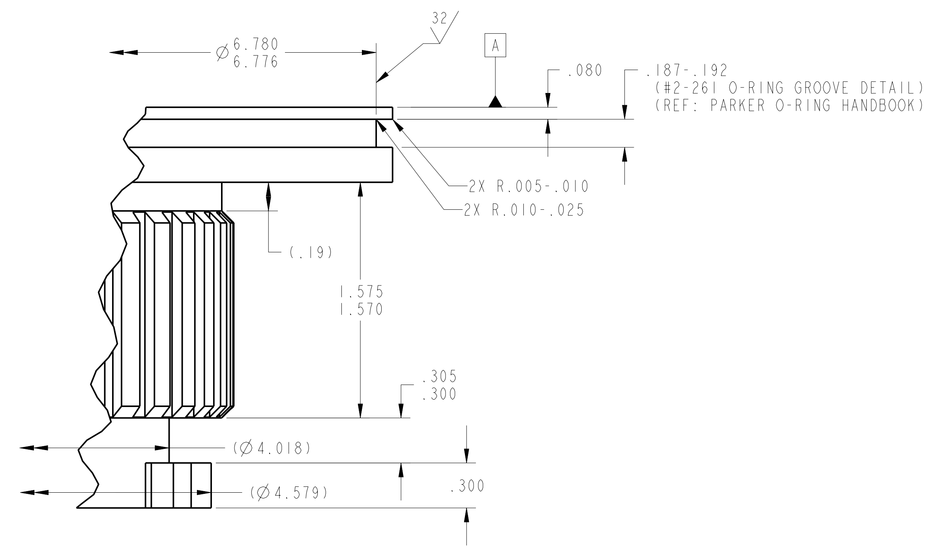

DETAIL E
SCALE 2/1

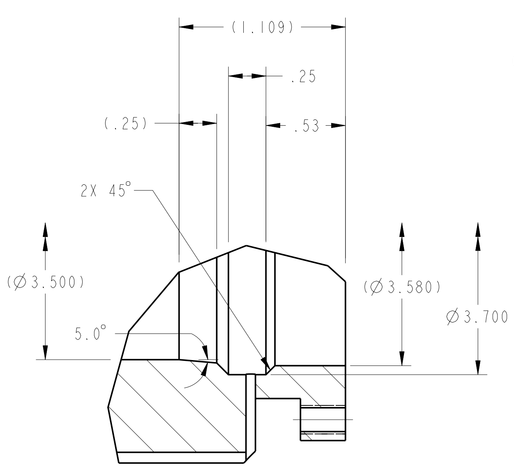

DETAIL B
SCALE 2/1

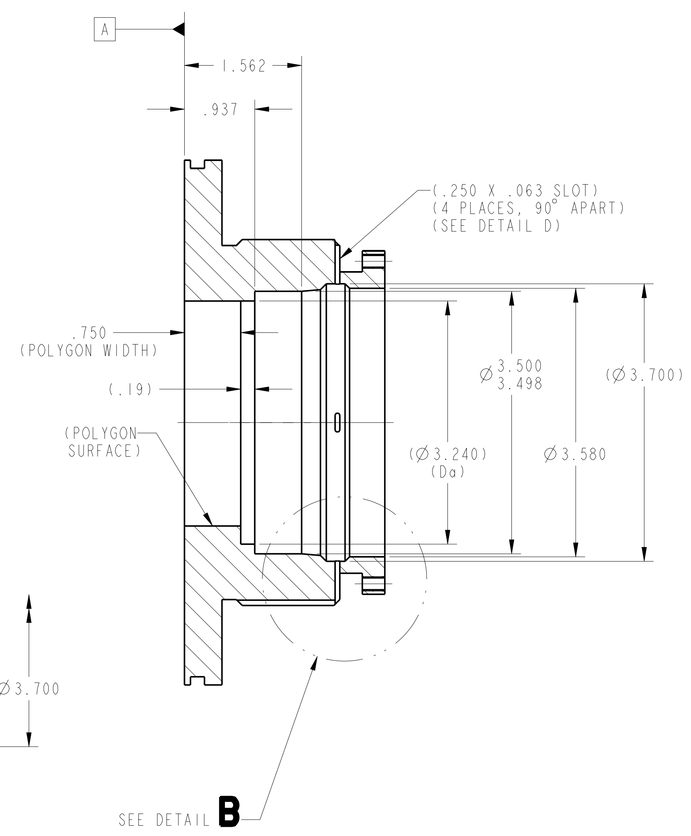

SECTION A-A

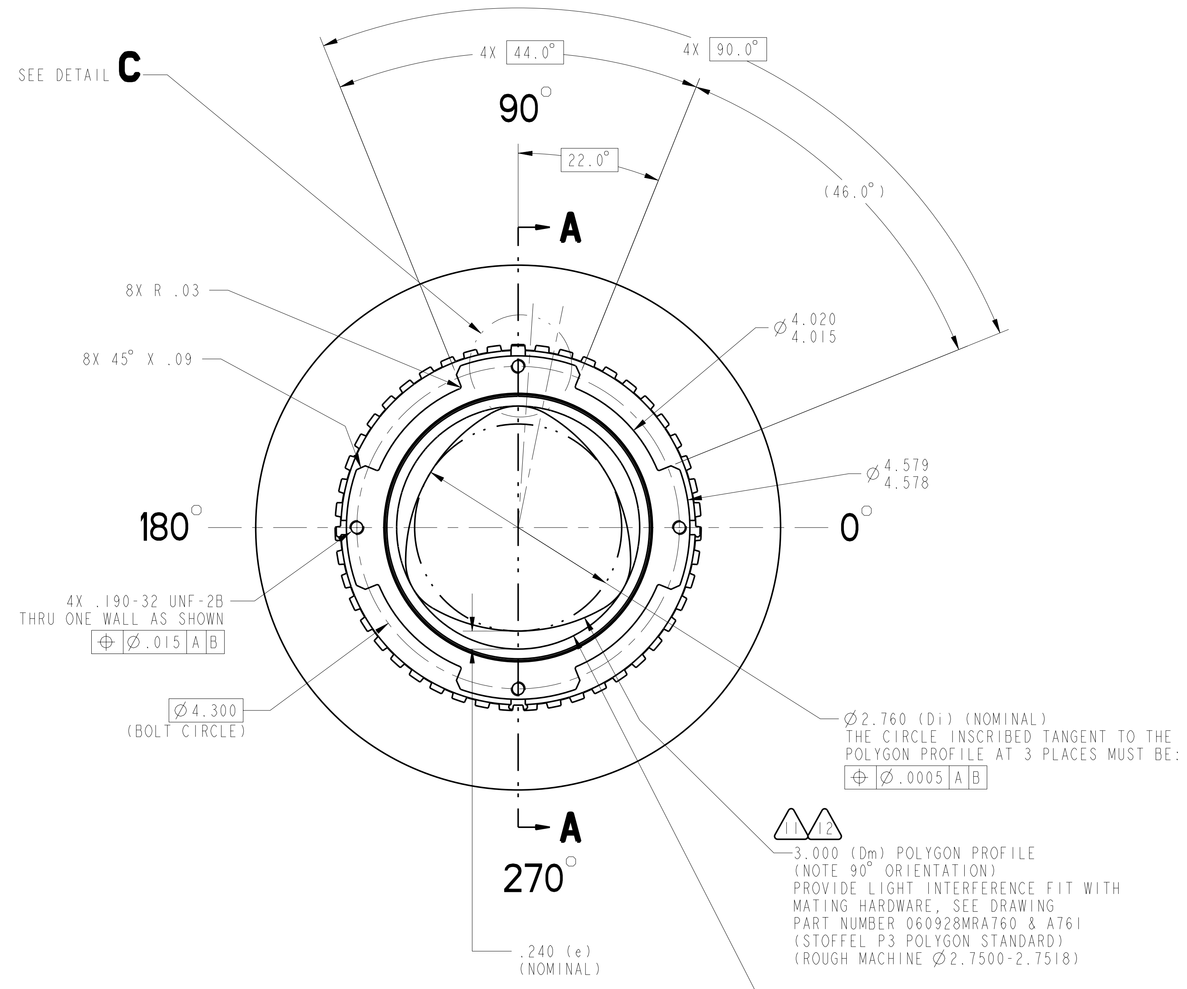

(REFERENCE: THIS VIEW IS FORWARD LOOKING AFT)

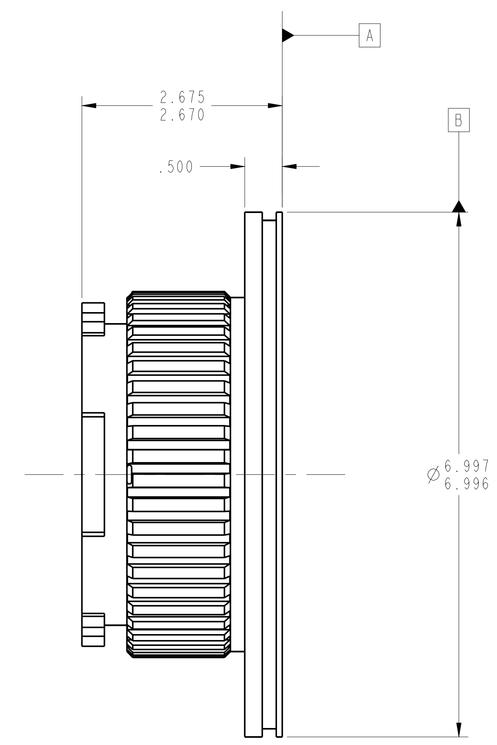

060928MRA700	2-SPEED TRANS	UNLESS OTHERWISE SPECIFIED DIMENSIONS ARE IN INCHES X.X ± 0.03 X.XXX ± 0.005 X.XX ± 0.01 ANGLE ± 0° 30' BREAK EDGES: .01-.02 INTERPRET DIMENSIONS AND TOLERANCES PER ASME Y14.5M - 1994	RELEASE DATE: 02/07/2014	NATIONAL AERONAUTICS AND SPACE ADMINISTRATION JOHN H. GLENN RESEARCH CENTER LEWIS FIELD, CLEVELAND, OHIO
NEXT ASSY	USED ON	THIRD ANGLE PROJECTION	DESIGNER: DEZ / R. DETAMORE	TITLE: HUB, DRIVEN
APPLICATION			ENGINEER: DER / M. STEVENS	
CONTRACTOR: -			STATE: Released	
CONTRACT NO: -			WINDCHILL PRODUCT: 060928_Variable_Speed_Transmissio	SIZE: E / CAGE CODE: 1QFP5 / DWG NO: 060928MRA755 / REV: A
			MODEL: A755_HUB_DRIVEN	SCALE: 1/1 / SHEET 1 OF 1

DWG NO 060928MRA755 SH 1 REV A

NAME/DIRECTORY CRUNCH/PATRO_HUB_DRIVEN DATE:10-MAR-14 10:07:26